Federal Register

8–17–05 Wednesday
Vol. 70 No. 158 Aug. 17, 2005

Pages 48269–48472

The **FEDERAL REGISTER** (ISSN 0097–6326) is published daily, Monday through Friday, except official holidays, by the Office of the Federal Register, National Archives and Records Administration, Washington, DC 20408, under the Federal Register Act (44 U.S.C. Ch. 15) and the regulations of the Administrative Committee of the Federal Register (1 CFR Ch. I). The Superintendent of Documents, U.S. Government Printing Office, Washington, DC 20402 is the exclusive distributor of the official edition. Periodicals postage is paid at Washington, DC.

The **FEDERAL REGISTER** provides a uniform system for making available to the public regulations and legal notices issued by Federal agencies. These include Presidential proclamations and Executive Orders, Federal agency documents having general applicability and legal effect, documents required to be published by act of Congress, and other Federal agency documents of public interest.

Documents are on file for public inspection in the Office of the Federal Register the day before they are published, unless the issuing agency requests earlier filing. For a list of documents currently on file for public inspection, see *www.archives.gov.*

The seal of the National Archives and Records Administration authenticates the Federal Register as the official serial publication established under the Federal Register Act. Under 44 U.S.C. 1507, the contents of the **Federal Register** shall be judicially noticed.

The **Federal Register** is published in paper and on 24x microfiche. It is also available online at no charge as one of the databases on GPO Access, a service of the U.S. Government Printing Office.

The online edition of the **Federal Register** *www.gpoaccess.gov/nara,* available through GPO Access, is issued under the authority of the Administrative Committee of the Federal Register as the official legal equivalent of the paper and microfiche editions (44 U.S.C. 4101 and 1 CFR 5.10). It is updated by 6 a.m. each day the **Federal Register** is published and includes both text and graphics from Volume 59, Number 1 (January 2, 1994) forward.

For more information about GPO Access, contact the GPO Access User Support Team, call toll free 1-888-293-6498; DC area 202-512-1530; fax at 202-512-1262; or via e-mail at *gpoaccess@gpo.gov.* The Support Team is available between 7:00 a.m. and 9:00 p.m. Eastern Time, Monday–Friday, except official holidays.

The annual subscription price for the **Federal Register** paper edition is $749 plus postage, or $808, plus postage, for a combined **Federal Register, Federal Register** Index and List of CFR Sections Affected (LSA) subscription; the microfiche edition of the **Federal Register** including the **Federal Register** Index and LSA is $165, plus postage. Six month subscriptions are available for one-half the annual rate. The prevailing postal rates will be applied to orders according to the delivery method requested. The price of a single copy of the daily **Federal Register,** including postage, is based on the number of pages: $11 for an issue containing less than 200 pages; $22 for an issue containing 200 to 400 pages; and $33 for an issue containing more than 400 pages. Single issues of the microfiche edition may be purchased for $3 per copy, including postage. Remit check or money order, made payable to the Superintendent of Documents, or charge to your GPO Deposit Account, VISA, MasterCard, American Express, or Discover. Mail to: New Orders, Superintendent of Documents, P.O. Box 371954, Pittsburgh, PA 15250-7954; or call toll free 1-866-512-1800, DC area 202-512-1800; or go to the U.S. Government Online Bookstore site, see *bookstore.gpo.gov.*

There are no restrictions on the republication of material appearing in the **Federal Register.**

How To Cite This Publication: Use the volume number and the page number. Example: 70 FR 12345.

Postmaster: Send address changes to the Superintendent of Documents, Federal Register, U.S. Government Printing Office, Washington DC 20402, along with the entire mailing label from the last issue received.

SUBSCRIPTIONS AND COPIES

PUBLIC	
Subscriptions:	
Paper or fiche	**202–512–1800**
Assistance with public subscriptions	**202–512–1806**
General online information	**202–512–1530; 1–888–293–6498**
Single copies/back copies:	
Paper or fiche	**202–512–1800**
Assistance with public single copies	**1–866–512–1800 (Toll-Free)**
FEDERAL AGENCIES	
Subscriptions:	
Paper or fiche	**202–741–6005**
Assistance with Federal agency subscriptions	**202–741–6005**

Printed on recycled paper.

Contents

Federal Register

Vol. 70, No. 158

Wednesday, August 17, 2005

Agriculture Department
See Animal and Plant Health Inspection Service
See Forest Service
See Grain Inspection, Packers and Stockyards Administration

Animal and Plant Health Inspection Service
PROPOSED RULES
Viruses, serums, toxins, etc.:
Virus-Serum-Toxin Act; records and reports; requirements; withdrawn, 48325–48329

Census Bureau
NOTICES
Agency information collection activities; proposals, submissions, and approvals, 48371–48372

Centers for Disease Control and Prevention
NOTICES
Meetings:
National Institute for Occupational Safety and Health—Occupational Energy Research Program, 48422–48423

Coast Guard
RULES
Drawbridge operations:
Florida, 48273–48274
Ports and waterways safety; regulated navigation areas, safety zones, security zones, etc.:
Port Townsend Waterway, Puget Sound, WA, 48274–48276
PROPOSED RULES
Drawbridge operations:
Wisconsin, 48354–48356

Commerce Department
See Census Bureau
See Economic Analysis Bureau
See International Trade Administration
See National Oceanic and Atmospheric Administration
See Patent and Trademark Office
See Technology Administration

Defense Department
NOTICES
Federal Acquisition Regulation (FAR):
Agency information collection activities; proposals, submissions, and approvals, 48375

Drug Enforcement Administration
NOTICES
Applications, hearings, determinations, etc.:
Mallinckrodt, Inc., 48441

Economic Analysis Bureau
RULES
International services surveys:
BE-36 et al.; international trade in services; annual surveys; reporting requirements, 48270–48272

Education Department
NOTICES
Agency information collection activities; proposals, submissions, and approvals, 48375–48378

Energy Department
See Federal Energy Regulatory Commission
NOTICES
Environmental statements; record of decision:
Los Alamos National Laboratory, NM; land tracts conveyance and transfer, 48378–48380

Environmental Protection Agency
RULES
Air quality implementation plans; approval and promulgation; various States:
Maryland, 48283–48285
New Mexico, 48285–48287
Virginia, 48277–48283
West Virginia, 48287–48290
PROPOSED RULES
Pesticide programs:
Pesticide registration review; procedural regulations, 48356–48357
NOTICES
Meetings:
Strategic Approach to International Chemicals Management; Third Preparatory Committee, 48391–48392
Pesticide, food, and feed additive petitions:
Interregional Research Project (No. 4), 48413–48417
Pesticide registration, cancellation, etc.:
Bayer CropScience et al., 48392–48398
Bonide Products, Inc., et al., 48398–48413
Reports and guidance documents; availability, etc.:
Environmental Sampling, Analysis and Results Draft Data Standards, 48417–48418
Toxic and hazardous substances control:
Dibasic esters; enforceable consent agreement testing; program review, 48418–48421

Federal Aviation Administration
PROPOSED RULES
Airworthiness directives:
Airbus, 48336–48338
Empresa Brasileira de Aeronautica S.A. (EMBRAER), 48339–48342
Shadin, 48333–48336
NOTICES
Agency information collection activities; proposals, submissions, and approvals, 48462
Airport noise compatibility program:
Capital City Airport, MI, 48462–48463
Santa Barbara Airport, CA, 48463–48464
Exemption petitions; summary and disposition, 48464–48465

Federal Communications Commission
RULES
Common carrier services:
Communications Act of 1934; implementation—Directory assistance; nondiscriminatory access requirements, 48290–48291

Radio stations; table of assignments:
Alabama, 48293–48294
Arkansas, 48291–48292
Georgia, 48292
Ohio and Kentucky, 48294
Texas, 48292–48293
Utah and Wyoming, 48293
Television broadcasting:
Cable television systems—
Satellite Home Viewer Extension and Reauthorization Act; implementation; effective date, 48295
Children's television programming—
Cable operators; digital television broadcast licensees' obligations and requirements; effective date, 48294–48295
PROPOSED RULES
Radio stations; table of assignments:
Arizona, 48362
Florida, 48360–48362
Indiana, 48357–48358
Kentucky, 48360–48361
Louisiana and Texas, 48358–48359
Texas, 48358
Wyoming, 48359–48360
NOTICES
Rulemaking proceedings; petitions filed, granted, denied, etc., 48421

Federal Energy Regulatory Commission
NOTICES
Electric rate and corporate regulation combined filings, 48387–48390
Hydroelectric applications, 48390–48391
Applications, hearings, determinations, etc.:
Alabama Power Company, 48380–48382
BJ Energy LLC, 48382
Bridgeline Gas Distribution LLC, 48382–48383
CenterPoint Energy Gas Transmission Co., 48383
Dominion Cove Point LNG, LP, 48383–48384
Dominion Transmission, Inc., 48384
Eastern Shore Natural Gas Co., 48385
El Paso Natural Gas Co., 48385–48386
E Minus Energy Corporation, 48385
Equitrans, L.P., 48386
Portland Natural Gas Transmission System, 48386
Viking Gas Transmission Co., 48386–48387
Western Area Power Administration, 48387

Federal Maritime Commission
NOTICES
Agreements filed, etc., 48421–48422

Federal Reserve System
RULES
Extensions of credit by Federal Reserve Banks (Regulation A):
Primary and secondary credit—
Rates; increase approval, 48269–48270
NOTICES
Banks and bank holding companies:
Permissible nonbanking activities, 48422

Fish and Wildlife Service
RULES
Marine mammals:
Native exemptions; authentic native articles of handicrafts and clothing; definition, 48321–48323
NOTICES
Endangered and threatened species:
Mariana fruit bat, etc.; 5-year reviews; correction, 48433
Reports and guidance documents; availability, etc.:
Genus caulerpa; national management plan, 48433–48434

Food and Drug Administration
RULES
Animal drugs, feeds, and related products:
Phenylbutazone, 48272–48273
Sponsor name and address changes—
Peptech, Animal Health Pty., Ltd., 48272
NOTICES
Agency information collection activities; proposals, submissions, and approvals, 48423–48426
Color additive petitions:
CIBA Vision Corp., 48426–48427
Committees; establishment, renewal, termination, etc.:
Public advisory committees; voting consumer representative members, 48427
Meetings:
Levothyroxine sodium drug products; therapeutic equivalence, 48428
Oncological Drugs Advisory Committee, 48428–48429

Forest Service
NOTICES
Environmental statements; notice of intent:
Black Hills National Forest, SD and WY, 48369–48370
Meetings:
Resource Advisory Committees—
Alpine County, 48370

General Services Administration
NOTICES
Federal Acquisition Regulation (FAR):
Agency information collection activities; proposals, submissions, and approvals, 48375
Meetings:
Household Goods and Freight Forum, 48422

Grain Inspection, Packers and Stockyards Administration
NOTICES
Agency designation actions:
Minnesota, 48370–48371

Health and Human Services Department
See Centers for Disease Control and Prevention
See Food and Drug Administration
See Health Resources and Services Administration

Health Resources and Services Administration
NOTICES
National Vaccine Injury Compensation Program:
Petitions received; list, 48429–48432

Homeland Security Department
See Coast Guard
See U.S. Citizenship and Immigration Services

Interior Department
See Fish and Wildlife Service
See Land Management Bureau

International Trade Administration
NOTICES
Meetings:
Environmental Technologies Trade Advisory Committee, 48372–48373

North American Free Trade Agreement (NAFTA); binational panel reviews:
Softwood lumber products from—
Canada, 48373
Applications, hearings, determinations, etc.:
State University of New York et al., 48372

International Trade Commission
NOTICES
Import investigations:
Structural steel beams from—
Japan and Korea, 48440–48441

Justice Department
See Drug Enforcement Administration

Labor Department
NOTICES
Grant and cooperative agreement awards:
Save the Children Federation Inc., 48441–48442

Land Management Bureau
NOTICES
Alaska Native claims selection:
Kake Tribal Corp., 48434
Olgoonik Corp., 48434
Titus, Frank, 48434–48435
Oil and gas leases:
California, 48435
Public land orders:
Idaho, 48435
Realty actions; sales, leases, etc.:
Alaska, 48435–48436
Colorado, 48436–48437
Nevada, 48437–48438
Recreation management restrictions, etc.:
Arizona State Office administered public lands; prohibition of open containers of alcohol while operating or riding in/on motor vehicles; supplementary rule, 48438–48440

National Aeronautics and Space Administration
NOTICES
Federal Acquisition Regulation (FAR):
Agency information collection activities; proposals, submissions, and approvals, 48375

National Highway Traffic Safety Administration
RULES
Motor vehicle safety standards:
Controls, telltales, and indicators, 48295–48312
Low-speed vehicle; definition, 48313–48320
PROPOSED RULES
Motor vehicle safety standards:
Theft protection and rollaway prevention, 48362–48368

National Oceanic and Atmospheric Administration
RULES
Fishery conservation and management:
Caribbean, Gulf, and South Atlantic fisheries—
Gulf of Mexico reef fish, 48323–48324
NOTICES
Grants and cooperative agreements; availability, etc.:
Educational Partnership Program—
Minority Serving Institutions; Scientific Environmental Technology Cooperative Science Center, 48468–48471
Meetings:
New England Fishery Management Council, 48373–48374

Nuclear Regulatory Commission
PROPOSED RULES
Rulemaking petitions:
Nevada; denied, 48329–48333
NOTICES
Meetings:
Reactor Safeguards Advisory Committee, 48444–48446
Applications, hearings, determinations, etc.:
FirstEnergy Nuclear Operating Co., et al., 48443–48444

Overseas Private Investment Corporation
NOTICES
Meetings; Sunshine Act, 48446

Patent and Trademark Office
NOTICES
Agency information collection activities; proposals, submissions, and approvals, 48374

Postal Rate Commission
RULES
Practice and procedure:
Nomenclature changes; Commission's address change, 48276–48277

Securities and Exchange Commission
NOTICES
Self-regulatory organizations; proposed rule changes:
International Securities Exchange, Inc., 48454
Pacific Exchange, Inc., 48454–48456
Philadelphia Stock Exchange, Inc., 48457–48459
Applications, hearings, determinations, etc.:
AXP California Tax-Exempt Trust, et al., 48446–48449
MetLife Investors USA Insurance Company, et al., 48449–48453

Small Business Administration
NOTICES
Intergovernmental review of agency programs and activities, 48459–48460

Social Security Administration
PROPOSED RULES
Social security benefits:
Federal old age, survivors, and disability insurance—
Visual disorders; evaluation criteria; revision, 48342–48354

Surface Transportation Board
NOTICES
Railroad operation, acquisition, construction, etc.:
Union Pacific Railroad Co., 48465

Technology Administration
NOTICES
Senior Executive Service:
Performance Review Board; membership, 48374–48375

Transportation Department
See Federal Aviation Administration
See National Highway Traffic Safety Administration
See Surface Transportation Board
NOTICES
Standard time zone boundaries:
Indiana, 48460–48462

U.S. Citizenship and Immigration Services
NOTICES
Agency information collection activities; proposals, submissions, and approvals, 48432–48433

Veterans Affairs Department
NOTICES
Agency information collection activities; proposals, submissions, and approvals, 48465–48466

Separate Parts In This Issue

Part II
Commerce Department, National Oceanic and Atmospheric Administration, 48468–48471

Reader Aids

Consult the Reader Aids section at the end of this issue for phone numbers, online resources, finding aids, reminders, and notice of recently enacted public laws.

To subscribe to the Federal Register Table of Contents LISTSERV electronic mailing list, go to http://listserv.access.gpo.gov and select Online mailing list archives, FEDREGTOC-L, Join or leave the list (or change settings); then follow the instructions.

CFR PARTS AFFECTED IN THIS ISSUE

A cumulative list of the parts affected this month can be found in the Reader Aids section at the end of this issue.

9 CFR

Proposed Rules:

101 48325
116 48325

10 CFR

Proposed Rules:

51 48329

12 CFR

201 48269

14 CFR

Proposed Rules:

39 (3 documents) 48333, 48336, 48339

15 CFR

801 48270

20 CFR

Proposed Rules:

404 48342

21 CFR

510 48272
522 48272

33 CFR

117 48273
165 48274

Proposed Rules:

117 48354

39 CFR

3001 48276
3002 48276
3003 48276

40 CFR

52 (5 documents) 48277, 48280, 48283, 48285, 48287

Proposed Rules:

155 48356

47 CFR

51 48290
73 (7 documents) 48291, 48292, 48293, 48294
76 48295

Proposed Rules:

73 (8 documents) 48357, 48358, 48359, 48360, 48361, 48362

49 CFR

571 (2 documents) 48295, 48313

Proposed Rules:

571 48362

50 CFR

18 48321
622 48323

Rules and Regulations

Federal Register

Vol. 70, No. 158

Wednesday, August 17, 2005

This section of the FEDERAL REGISTER contains regulatory documents having general applicability and legal effect, most of which are keyed to and codified in the Code of Federal Regulations, which is published under 50 titles pursuant to 44 U.S.C. 1510.

The Code of Federal Regulations is sold by the Superintendent of Documents. Prices of new books are listed in the first FEDERAL REGISTER issue of each week.

FEDERAL RESERVE SYSTEM

12 CFR Part 201

[Regulation A]

Extensions of Credit by Federal Reserve Banks

AGENCY: Board of Governors of the Federal Reserve System.

ACTION: Final rule.

SUMMARY: The Board of Governors of the Federal Reserve System (Board) has adopted final amendments to its Regulation A to reflect the Board's approval of an increase in the primary credit rate at each Federal Reserve Bank. The secondary credit rate at each Reserve Bank automatically increased by formula as a result of the Board's primary credit rate action.

DATES: The amendments to part 201 (Regulation A) are effective August 17, 2005. The rate changes for primary and secondary credit were effective on the dates specified in 12 CFR 201.51, as amended.

FOR FURTHER INFORMATION CONTACT: Jennifer J. Johnson, Secretary of the Board (202/452–3259); for users of Telecommunication Devices for the Deaf (TDD) only, contact 202/263–4869.

SUPPLEMENTARY INFORMATION: The Federal Reserve Banks make primary and secondary credit available to depository institutions as a backup source of funding on a short-term basis, usually overnight. The primary and secondary credit rates are the interest rates that the twelve Federal Reserve Banks charge for extensions of credit under these programs. In accordance with the Federal Reserve Act, the primary and secondary credit rates are established by the boards of directors of the Federal Reserve Banks, subject to the review and determination of the Board.

The Board approved requests by the Reserve Banks to increase by 25 basis points the primary credit rate in effect at each of the twelve Federal Reserve Banks, thereby increasing from 4.25 percent to 4.50 percent the rate that each Reserve Bank charges for extensions of primary credit. As a result of the Board's action on the primary credit rate, the rate that each Reserve Bank charges for extensions of secondary credit automatically increased from 4.75 percent to 5.00 percent under the secondary credit rate formula. The final amendments to Regulation A reflect these rate changes.

The 25-basis-point increase in the primary credit rate was associated with a similar increase in the target for the federal funds rate (from 3.25 percent to 3.50 percent) approved by the Federal Open Market Committee (Committee) and announced at the same time. A press release announcing these actions indicated that:

> The Committee believes that, even after this action, the stance of monetary policy remains accommodative and, coupled with robust underlying growth in productivity, is providing ongoing support to economic activity. Aggregate spending, despite high energy prices, appears to have strengthened since late winter, and labor market conditions continue to improve gradually. Core inflation has been relatively low in recent months and longer-term inflation expectations remain well contained, but pressures on inflation have stayed elevated.
>
> The Committee perceives that, with appropriate monetary policy action, the upside and downside risks to the attainment of both sustainable growth and price stability should be kept roughly equal. With underlying inflation expected to be contained, the Committee believes that policy accommodation can be removed at a pace that is likely to be measured. Nonetheless, the Committee will respond to changes in economic prospects as needed to fulfill its obligation to maintain price stability.

Regulatory Flexibility Act Certification

Pursuant to the Regulatory Flexibility Act (5 U.S.C. 605(b)), the Board certifies that the new primary and secondary credit rates will not have a significantly adverse economic impact on a substantial number of small entities because the final rule does not impose any additional requirements on entities affected by the regulation.

Administrative Procedure Act

The Board did not follow the provisions of 5 U.S.C. 553(b) relating to notice and public participation in connection with the adoption of these amendments because the Board for good cause determined that delaying implementation of the new primary and secondary credit rates in order to allow notice and public comment would be unnecessary and contrary to the public interest in fostering price stability and sustainable economic growth. For these same reasons, the Board also has not provided 30 days prior notice of the effective date of the rule under section 553(d).

12 CFR Chapter II

List of Subjects in 12 CFR Part 201

Banks, Banking, Federal Reserve System, Reporting and recordkeeping.

Authority and Issuance

■ For the reasons set forth in the preamble, the Board is amending 12 CFR Chapter II to read as follows:

PART 201—EXTENSIONS OF CREDIT BY FEDERAL RESERVE BANKS (REGULATION A)

■ 1. The authority citation for part 201 continues to read as follows:

Authority: 12 U.S.C. 248(i)–(j), 343 *et seq.*, 347a, 347b, 347c, 348 *et seq.*, 357, 374, 374a, and 461.

■ 2. In § 201.51, paragraphs (a) and (b) are revised to read as follows:

§ 201.51 Interest rates applicable to credit extended by a Federal Reserve Bank.[1]

(a) *Primary credit.* The interest rates for primary credit provided to depository institutions under § 201.4(a) are:

[1] The primary, secondary, and seasonal credit rates described in this section apply to both advances and discounts made under the primary, secondary, and seasonal credit programs, respectively.

Federal Reserve Bank	Rate	Effective
Boston	4.50	August 9, 2005.
New York	4.50	August 9, 2005.
Philadelphia	4.50	August 9, 2005.
Cleveland	4.50	August 9, 2005.
Richmond	4.50	August 9, 2005.
Atlanta	4.50	August 9, 2005.
Chicago	4.50	August 9, 2005.
St. Louis	4.50	August 10, 2005.
Minneapolis	4.50	August 9, 2005.
Kansas City	4.50	August 9, 2005.
Dallas	4.50	August 9, 2005.
San Francisco	4.50	August 9, 2005.

(b) *Secondary credit.* The interest rates for secondary credit provided to depository institutions under § 201.4(b) are:

Federal Reserve Bank	Rate	Effective
Boston	5.00	August 9, 2005.
New York	5.00	August 9, 2005.
Philadelphia	5.00	August 9, 2005.
Cleveland	5.00	August 9, 2005.
Richmond	5.00	August 9, 2005.
Atlanta	5.00	August 9, 2005.
Chicago	5.00	August 9, 2005.
St. Louis	5.00	August 10, 2005.
Minneapolis	5.00	August 9, 2005.
Kansas City	5.00	August 9, 2005.
Dallas	5.00	August 9, 2005.
San Francisco	5.00	August 9, 2005.

* * * * *

By order of the Board of Governors of the Federal Reserve System, August 12, 2005.

Jennifer J. Johnson,

Secretary of the Board.

[FR Doc. 05–16322 Filed 8–16–05; 8:45 am]

BILLING CODE 6210–02–P

DEPARTMENT OF COMMERCE

Bureau of Economic Analysis

15 CFR Part 801

[Docket No. 050406094–5201–02]

RIN 0691–AA59

International Services Surveys: Cancellation of Five Annual Surveys

AGENCY: Bureau of Economic Analysis, Commerce.

ACTION: Final rule.

SUMMARY: This final rule removes the reporting requirements for five annual surveys covering international trade in services. The five annual surveys being discontinued are: BE–36, BE–47, BE–48, BE–82, and BE–93. The surveys are being discontinued because they have been replaced by quarterly surveys that collect essentially the same information.

DATES: *Effective Date:* This final rule will be effective at 5 p.m. September 16, 2005.

FOR FURTHER INFORMATION CONTACT: Obie G. Whichard, Chief, International Investment Division (BE–50), Bureau of Economic Analysis, U.S. Department of Commerce, Washington, DC 20230; phone (202) 606–9890 or e-mail *obie.whichard@bea.gov.*

SUPPLEMENTARY INFORMATION: In the May 5, 2005 **Federal Register**, 70 FR 23811–23813, the Bureau of Economic Analysis (BEA) published a notice of proposed rulemaking to remove the reporting requirements for five annual surveys covering international trade in services. No comments on the proposed rule were received. Thus, the provisions in the proposed rule are adopted without change. This final rule amends 15 CFR part 801 by revising Section 801.9(b) to remove the reporting requirements for five annual surveys that collect data covering international trade in services. The five surveys are:

BE–36, Foreign Airline Operators' Revenues and Expenses in the United States.

BE–47, Annual Survey of Construction, Engineering, Architectural, and Mining Services Provided by U.S. Firms to Unaffiliated Foreign Persons.

BE–48, Annual Survey of Reinsurance and Other Insurance Transactions by U.S. Insurance Companies with Foreign Persons.

BE–82, Annual Survey of Financial Services Transactions Between U.S. Financial Services Providers and Unaffiliated Foreign Persons.

BE–93, Annual Survey of Royalties, License Fees, and Other Receipts and Payments for Intangible Rights Between U.S. and Unaffiliated Foreign Persons.

BEA is removing the reporting requirements for these five annual surveys because the information is now being collected on four separate quarterly surveys. Specifically, the BE–9, Quarterly Survey of Foreign Airline Operators' Revenues and Expenses in the United States, replaces the BE–36 survey; the BE–25, Quarterly Survey of Transactions Between U.S. and Unaffiliated Foreign Persons in Selected Services and in Intangible Assets, replaces the BE–47 and BE–93 surveys; the BE–45, Quarterly Survey of Insurance Transactions by U.S. Insurance Companies with Foreign Persons, replaces the BE–48 survey; and the BE–85, Quarterly Survey of Financial Services Transactions Between U.S. Financial Services Providers and Unaffiliated Foreign Persons, replaces the BE–82 survey. BEA began collecting data on these quarterly surveys in 2004.

Executive Order 12866

This final rule has been determined to be not significant for purposes of E.O. 12866.

Executive Order 13132

This final rule does not contain policies with federalism implications as that term is defined in E.O. 13132.

Regulatory Flexibility Act

The Chief Counsel for Regulation certified to the Chief Counsel for Advocacy of the Small Business Administration that this rule will not have a significant economic impact on a substantial number of small entities as that term is defined in the Regulatory Flexibility Act, 5 U.S.C. 601 *et seq.* The factual basis for this certification was published in the proposed rule. No comments were received regarding the economic impact of this rule. As a result, no final regulatory flexibility analysis was prepared.

Paperwork Reduction Act

The surveys being discontinued by this rule have been approved by the Office of Management and Budget (OMB) under the Paperwork Reduction Act under the following OMB control numbers: 0608–0013 (BE–36 survey), 0608–0015 (BE–47 survey), 0608–0016 (BE–48 survey), 0608–0017 (BE–93 survey), and 0608–0063 (BE–82 survey). OMB approved the quarterly surveys under the following OMB control numbers: 0608–0068 (BE–9 survey); 0608–0067 (BE–25 survey); 0608–0066 (BE–45 survey); and 0608–0065 (BE–85 survey).

List of Subjects in 15 CFR Part 801

International transactions, Economic statistics, Foreign trade, Penalties, Reporting and recordkeeping requirements.

J. Steven Landefeld,

Director, Bureau of Economic Analysis.

■ For the reasons set forth in the preamble, BEA amends 15 CFR part 801, as follows:

PART 801—SURVEY OF INTERNATIONAL TRADE IN SERVICES BETWEEN U.S. AND FOREIGN PERSONS

■ 1. The authority citation for 15 CFR part 801 continues to read as follows:

Authority: 5 U.S.C. 301; 15 U.S.C. 4908; 22 U.S.C. 3101–3108; and E.O. 11961, 3 CFR, 1977 Comp., p. 86, as amended by E.O. 12318, 3 CFR, 1981 Comp., p. 173, and E.O. 12518, 3 CFR, 1985 Comp., p. 348.

■ 2. Section 801.9(b) is revised to read as follows:

§ 801.9 Reports required.

* * * * *

(b) *Annual surveys.* (1) BE–29, Foreign Ocean Carriers' Expenses in the United States:

(i) *Who must report.* A BE–29 report is required from U.S. agents on behalf of foreign ocean carriers transporting freight or passengers to or from the United States. U.S. agents are steamship agents and other persons representing foreign carriers in arranging ocean transportation of freight and cargo between U.S. and foreign ports and in arranging port services in the United States. Foreign carriers are foreign persons that own or operate ocean going vessels calling at U.S. ports, including VLCC tankers discharging petroleum offshore to pipelines and lighter vessels destined for U.S. ports. They include carriers who own or who operate their own or chartered (United States or foreign-flag) vessels. They also include foreign subsidiaries of U.S. companies operating their own or chartered vessels as carriers for their own accounts. Where the vessels under foreign registry are operated directly by a U.S. carrier for its own account, the operations of such vessels should be reported on Form BE–30, Ocean Freight Revenues and Foreign Expenses of United States Carriers. The Bureau of Economic Analysis may, in lieu of BE–29 reports required from foreign carriers' U.S. agents, accept consolidated reports from foreign governments covering the operations of their national shipping concerns when, in the Bureau's discretion, such consolidated reports would provide the required information. Where such reports are accepted, the individual reports from foreign carriers' U.S. agents will not be required.

(ii) *Exemption.* Any U.S. person otherwise required to report is exempted from reporting if the total number of port calls by foreign vessels handled in the reporting period is less than forty or total covered expenses are less than $250,000. For example, if an agent handled less than 40 port calls in a calendar year, the agent is exempted from reporting. If the agent handled 40 or more calls, the agent must report unless covered expenses for all foreign carriers handled by the agent were less than $250,000. The determination of whether a U.S. person is exempt may be based on the judgment of knowledgeable persons who can identify reportable transactions without conducting a detailed manual records search.

(2) BE–22, Annual Survey of Selected Services Transactions With Unaffiliated Foreign Persons:

(i) *Who must report*—(A) Mandatory reporting. A BE–22 report is required from each U.S. person who had transactions (either sales or purchases) in excess of $1,000,000 with unaffiliated foreign persons in any of the covered services during the U.S. person's fiscal year. The determination of whether a U.S. person is subject to this mandatory reporting requirement may be judgmental, that is, based on the judgment of knowledgeable persons in a company who can identify reportable transactions on a recall basis, with a reasonable degree of certainty without conducting a detailed manual records search.

(B) *Voluntary reporting.* If, during the U.S. person's fiscal year, the U.S. person's total transactions (either sales or purchases) in any of the covered services is $1,000,000 or less, the U.S. person is requested to provide an estimate of the total for each type of service. Provision of this information is voluntary. The estimates may be judgmental, that is, based on recall, without conducting a detailed manual records search.

(C) Any U.S. person receiving a BE–22 survey form from BEA must complete all relevant parts of the form and return the form to BEA. A person that is not subject to the mandatory reporting requirement in paragraph (b)(2)(i)(A) of this section and is not filing information on a voluntary basis must only complete the ''Determination of reporting status'' and the ''Certification'' sections of the survey. This requirement is necessary to ensure compliance with the reporting requirements and efficient administration of the survey by eliminating unnecessary followup contact.

(ii) *Covered services.* The covered services are: Advertising services; auxiliary insurance services (by non-insurance companies only); educational and training services; financial services (purchases only by non-financial services providers); medical services, inpatient (receipts only); medical services, other than inpatient (receipts only); merchanting services (receipts only); mining services; disbursements to fund news-gathering costs of broadcasters; disbursements to fund news-gathering costs of print media; disbursements to fund productions costs of motion pictures; disbursements to fund production costs of broadcast program material other than news; disbursements to maintain government tourism and business promotion offices; disbursements for sales promotion and representation; disbursements to participate in foreign trade shows

(purchases only); other trade-related services; performing arts, sports, and other live performances, presentations, and events; primary insurance premiums (payments only); primary insurance losses recovered; sale or purchase of rights to natural resources, and lease bonus payments; use or lease of rights to natural resources, excluding lease bonus payments; waste treatment and depollution services; and other private services (language translation services; salvage services; security services; account collection services; satellite photography and remote sensing/satellite imagery services; space transport (includes satellite launches, transport of goods and people for scientific experiments, and space passenger transport); and transcription services).

* * * * *

[FR Doc. 05–16305 Filed 8–16–05; 8:45 am]

BILLING CODE 3510–06–P

DEPARTMENT OF HEALTH AND HUMAN SERVICES

Food and Drug Administration

21 CFR Part 510

New Animal Drugs; Change of Sponsor's Address

AGENCY: Food and Drug Administration, HHS.

ACTION: Final rule.

SUMMARY: The Food and Drug Administration (FDA) is amending the animal drug regulations to reflect a change of sponsor's address for Peptech Animal Health Pty, Ltd.

DATES: This rule is effective August 17, 2005.

FOR FURTHER INFORMATION CONTACT: David R. Newkirk, Center for Veterinary Medicine (HFV–100), Food and Drug Administration, 7500 Standish Pl., Rockville, MD 20855, 301–827–6967, e-mail: *david.newkirk@fda.gov*.

SUPPLEMENTARY INFORMATION: Peptech Animal Health Pty, Ltd., 35–41 Waterloo Rd., North Ryde, New South Wales 2113, Australia has informed FDA of a change of address to 19–25 Khartoum Rd., Macquarie Park, New South Wales 2113, Australia. Accordingly, the agency is amending the regulations in 21 CFR 510.600(c) to reflect the change.

This rule does not meet the definition of ''rule'' in 5 U.S.C. 804(3)(A) because it is a rule of ''particular applicability.'' Therefore, it is not subject to the congressional review requirements in 5 U.S.C. 801–808.

List of Subjects in 21 CFR Part 510

Administrative practice and procedure, Animal drugs, Labeling, Reporting and recordkeeping requirements.

■ Therefore, under the Federal Food, Drug, and Cosmetic Act and under authority delegated to the Commissioner of Food and Drugs and redelegated to the Center for Veterinary Medicine, 21 CFR part 510 is amended as follows:

PART 510—NEW ANIMAL DRUGS

■ 1. The authority citation for 21 CFR part 510 continues to read as follows:

Authority: 21 U.S.C. 321, 331, 351, 352, 353, 360b, 371, 379e.

■ 2. Section 510.600 is amended in the table in paragraph (c)(1) by revising the entry for ''Peptech Animal Health Pty, Ltd.''; and in the table in paragraph (c)(2) by revising the entry for ''064288'' to read as follows:

§ 510.600 Names, addresses, and drug labeler codes of sponsors of approved applications.

* * * * *

(c) * * *

(1) * * *

Firm name and address	Drug labeler code
* * *	* *
Peptech Animal Health Pty, Ltd., 19–25 Khartoum Rd., Macquarie Park, New South Wales 2113, Australia.	064288
* * *	* *

(2) * * *

Drug labeler code	Firm name and address
* * *	* *
064288	Peptech Animal Health Pty, Ltd., 19–25 Khartoum Rd., Macquarie Park, New South Wales 2113, Australia
* * *	* *

July 28, 2005.

Bernadette A. Dunham,

Deputy Director, Office of New Animal Drug Evaluation, Center for Veterinary Medicine.

[FR Doc. 05–16280 Filed 8–16–05; 8:45 am]

BILLING CODE 4160–01–S

DEPARTMENT OF HEALTH AND HUMAN SERVICES

Food and Drug Administration

21 CFR Part 522

Implantation or Injectable Dosage Form New Animal Drugs; Phenylbutazone Injection

AGENCY: Food and Drug Administration, HHS.

ACTION: Final rule.

SUMMARY: The Food and Drug Administration (FDA) is amending the animal drug regulations to reflect approval of an abbreviated new animal drug application (ANADA) filed by Sparhawk Laboratories, Inc. The ANADA provides for the veterinary prescription use of phenylbutazone injectable solution in horses for relief of inflammatory conditions associated with the musculoskeletal system.

DATES: This rule is effective August 17, 2005.

FOR FURTHER INFORMATION CONTACT: John K. Harshman, Center for Veterinary Medicine (HFV 104), Food and Drug Administration, 7500 Standish Pl., Rockville, MD 20855, 240–276–9808, e-mail: *john.harshman@fda.gov*.

SUPPLEMENTARY INFORMATION: Sparhawk Laboratories, Inc., 12340 Santa Fe Trail Dr., Lenexa , KS 66215–3591, filed ANADA 200–371 for the use of Phenylbutazone 20% Injection by veterinary prescription for relief of inflammatory conditions associated with the musculoskeletal system in horses. Sparhawk Laboratories, Inc.'s, Phenylbutazone 20% Injection is approved as a generic copy of Schering-Plough Animal Health Corp.'s, BUTAZOLIDIN Injectable 20%, approved under NADA 11–575. The ANADA is approved as of July 8, 2005, and the regulations in 21 CFR 522.1720 are amended to reflect the approval. The basis of approval is discussed in the freedom of information(FOI) summary.

In accordance with the FOI provisions of 21 CFR part 20 and 21 CFR 514.11(e)(2)(ii), a summary of safety and effectiveness data and information submitted to support approval of this application may be seen in the Division of Dockets Management (HFA–305), Food and Drug Administration, 5630 Fishers Lane, rm. 1061, Rockville, MD 20852, between 9 a.m. and 4 p.m., Monday through Friday.

The agency has determined under 21 CFR 25.33(a)(1) that this action is of a type that does not individually or cumulatively have a significant effect on the human environment. Therefore,

neither an environmental assessment nor an environmental impact statement is required.

This rule does not meet the definition of ''rule'' in 5 U.S.C. 804(3)(A) because it is a rule of ''particular applicability.'' Therefore, it is not subject to the congressional review requirements in 5 U.S.C. 801–808.

List of Subjects in 21 CFR Part 522

Animal drugs.

■ Therefore, under the Federal Food, Drug, and Cosmetic Act and under authority delegated to the Commissioner of Food and Drugs and redelegated to the Center for Veterinary Medicine, 21 CFR part 522 is amended as follows:

PART 522—IMPLANTATION OR INJECTABLE DOSAGE FORM NEW ANIMAL DRUGS

■ 1. The authority citation for 21 CFR part 522 continues to read as follows:

Authority: 21 U.S.C. 360b.

§ 522.1720 [Amended]

■ 2. Section 522.1720 is amended in paragraph (b)(2) by removing ''No. 000010'' and by adding in its place ''Nos. 000010 and 058005''.

Dated: July 26, 2005.

Stephen F. Sundlof,

Director, Center for Veterinary Medicine.

[FR Doc. 05–16240 Filed 8–16–05; 8:45 am]

BILLING CODE 4160–01–S

DEPARTMENT OF HOMELAND SECURITY

Coast Guard

33 CFR Part 117

[CGD08–05–040]

RIN 1625–AA09

Drawbridge Operation Regulation; Massalina Bayou, Panama City, FL

AGENCY: Coast Guard, DHS.

ACTION: Temporary rule.

SUMMARY: The Commander, Eighth Coast Guard District, has temporarily changed the regulation governing the operation of the Tarpon Dock bascule span drawbridge across Massalina Bayou, mile 0.0, at Panama City, Bay County, Florida. The regulation will allow the draw of the bridge to remain closed to navigation for one hour to facilitate the American Heart Walk.

DATES: This temporary rule is effective from 9 a.m. to 10 a.m. on October 15, 2005.

ADDRESSES: Documents referred to in this rule are available for inspection or copying at the office of the Eighth Coast Guard District, Bridge Administration Branch, 500 Poydras Street, New Orleans, Louisiana 70130–3310, between 7 a.m. and 3 p.m., Monday through Friday, except Federal holidays. The telephone number is (504) 589–2965. The Eighth District Bridge Administration Branch maintains the public docket for this rulemaking.

FOR FURTHER INFORMATION CONTACT: David Frank, Bridge Administration Branch, (504) 589–2965.

SUPPLEMENTARY INFORMATION:

Good Cause for Not Publishing an NPRM

We did not publish a notice of proposed rulemaking (NPRM) for this regulation. Under 5 U.S.C. 553(b)(B), the Coast Guard finds that good cause exists for not publishing an NPRM. Thousands of pedestrians will cross the bridge during the event and this temporary rule is necessary to ensure their safety as they cross the bridge. Additionally, the event will only impact the waterway users for one hour and will open for vessels in distress.

Background and Purpose

The American Heart Association, on behalf of the City of Panama City, has requested a temporary rule changing the operation of the Tarpon Dock bascule span drawbridge across Massalina Bayou, mile 0.0, in Panama City, Bay County, Florida. This temporary rule is needed to accommodate approximately 2,000 pedestrians that are expected to participate in a 3.5-mile walk. The bridge is near the beginning of the walk and allowing the bridge to open for navigation during this short time period would disrupt the event and could result in injury. The bridge has a vertical clearance of 7 feet above mean high water in the closed-to-navigation position and unlimited in the open-to-navigation position. Navigation on the waterway consists primarily of commercial fishing vessels, sailing vessels and other recreational craft. Presently, Title 33, Code of Federal Regulations (CFR), Part 117.301 states: The draw of the Tarpon Dock bascule span bridge, Massalina Bayou, mile 0.0, shall open on signal; except that from 9 p.m. until 11 p.m. on July 4, each year, the draw need not open for the passage of vessels. The draw will open at any time for a vessel in distress. This temporary rule will allow the bridge to be maintained in the closed-to-navigation position from 9 a.m. to 10 a.m. on October 15, 2005 to facilitate the American Heart Walk.

Regulatory Evaluation

This rule is not a ''significant regulatory action'' under section 3(f) of Executive Order 12866, Regulatory Planning and Review, and does not require an assessment of potential costs and benefits under section 6(a)(3) of that Order. The Office of Management and Budget has not reviewed it under that Order. It is not ''significant'' under the regulatory policies and procedures of the Department of Homeland Security (DHS). This temporary rule will be effective for only one hour and is therefore expected to have only a minor affect on the local economy.

Small Entities

Under the Regulatory Flexibility Act (5 U.S.C. 601–612), we have considered whether this rule would have a significant economic impact on a substantial number of small entities. The term ''small entities'' comprises small businesses, not-for-profit organizations that are independently owned and operated and are not dominant in their fields, and governmental jurisdictions with populations of less than 50,000.

The Coast Guard certifies under 5 U.S.C. 605(b) that this temporary rule will not have a significant economic impact on a substantial number of small entities.

This rule may affect the following entities, some of which may be small entities: the owners or operators of vessels intending to transit through the Tarpon dock bridge across Massalina Bayou during the closure. There is not expected to be a significant impact due to the short duration of the closure and the publicity given to the event.

Assistance for Small Entities

Under section 213(a) of the Small Business Regulatory Enforcement Fairness Act of 1996 (Public Law 104–121), we want to assist small entities in understanding this rule so that they can better evaluate its effects on them and participate in the rulemaking process.

Small businesses may send comments on the actions of Federal employees who enforce, or otherwise determine compliance with, Federal regulations to the Small Business and Agriculture Regulatory Enforcement Ombudsman and the Regional Small Business Regulatory Fairness Boards. The Ombudsman evaluates these actions annually and rates each agency's responsiveness to small business. If you wish to comment on actions by

employees of the Coast Guard, call 1–888–REG–FAIR (1–888–734–3247).

Collection of Information

This rule calls for no new collection of information under the Paperwork Reduction Act of 1995 (44 U.S.C. 3501–3520).

Federalism

A rule has implications for federalism under Executive Order 13132, Federalism, if it has a substantial direct effect on State or local governments and would either preempt State law or impose a substantial direct cost of compliance on them. We have analyzed this rule under that Order and have determined that it does not have implications for federalism.

Unfunded Mandates Reform Act

The Unfunded Mandates Reform Act of 1995 (2 U.S.C. 1531–1538) requires Federal agencies to assess the effects of their discretionary regulatory actions. In particular, the Act addresses actions that may result in the expenditure by a State, local, or tribal government, in the aggregate, or by the private sector of $100,000,000 or more in any one year. Though this rule will not result in such an expenditure, we do discuss the effects of this rule elsewhere in the preamble.

Taking of Private Property

This rule will not affect a taking of private property or otherwise have taking implications under Executive Order 12630, Governmental Actions and Interference with Constitutionally Protected Property Rights.

Civil Justice Reform

This rule meets applicable standards in sections 3(a) and 3(b)(2) of Executive Order 12988, Civil Justice Reform, to minimize litigation, eliminate ambiguity, and reduce burden.

Protection of Children

We have analyzed this rule under Executive Order 13045, Protection of Children from Environmental Health Risks and Safety Risks. This rule is not an economically significant rule and does not cause an environmental risk to health or risk to safety that may disproportionately affect children.

Indian Tribal Governments

This rule does not have tribal implications under Executive Order 13175, Consultation and Coordination with Indian Tribal Governments, because it does not have a substantial direct effect on one or more Indian tribes, on the relationship between the Federal Government and Indian tribes, or on the distribution of power and responsibilities between the Federal Government and Indian tribes.

Energy Effects

We have analyzed this rule under Executive Order 13211, Actions Concerning Regulations That Significantly Affect Energy Supply, Distribution, or Use. We have determined that it is not a ''significant energy action'' under that order because it is not a ''significant regulatory action'' under Executive Order 12866 and is not likely to have a significant adverse effect on the supply, distribution, or use of energy. The Administrator of the Office of Information and Regulatory Affairs has not designated it as a significant energy action. Therefore, it does not require a Statement of Energy Effects under Executive Order 13211.

Technical Standards

The National Technology Transfer and Advancement Act (NTTAA) (15 U.S.C. 272 note) directs agencies to use voluntary consensus standards in their regulatory activities unless the agency provides Congress, through the Office of Management and Budget, with an explanation of why using these standards would be inconsistent with applicable law or otherwise impractical. Voluntary consensus standards are technical standards (*e.g.* specifications of materials, performance, design, or operation; test methods; sampling procedures; and related management systems practices) that are developed or adopted by voluntary consensus standards bodies.

This rule does not use technical standards. Therefore, we did not consider the use of voluntary consensus standards.

Environment

We have analyzed this rule under Commandant Instruction M16475.lD, which guides the Coast Guard in complying with the National Environmental Policy Act of 1969 (NEPA) (42 U.S.C. 4321–4370f), and have concluded that there are no factors in this case that would limit the use of a categorical exclusion under section 2.B.2 of the Instruction. Therefore, this temporary rule is categorically excluded, under figure 2–1, paragraph (32)(e) of the Instruction, from further environmental documentation.

List of Subjects in 33 CFR Part 117

Bridges.

Regulations

■ For the reasons set out in the preamble, the Coast Guard amends 33 CFR part 117 as follows:

PART 117—DRAWBRIDGE OPERATION REGULATIONS

■ 1. The authority citation for part 117 continues to read as follows:

Authority: 33 U.S.C. 499; Department of Homeland Security Delegation No. 0170.1; 33 CFR 1.05–1(g); section 117.255 also issued under the authority of Pub. L. 102–587, 106 Stat. 5039.

■ 2. Effective 9 a.m. until 10 a.m. on October 15, 2005, § 117.301 is temporarily suspended and a new § 117.T302 is added to read as follows:

§ 117.T302 Massalina Bayou.

The draw of the Tarpon Dock bascule span bridge, Massalina Bayou, mile 0.0, shall open on signal; except that from 9 a.m. until 10 a.m. on October 15, 2005, the draw need not open for the passage of vessels. The draw will open at any time for a vessel in distress.

Dated: August 5, 2005.

Kevin L. Marshall,

Captain, U.S. Coast Guard, Commander 8th Coast Guard Dist. Acting.

[FR Doc. 05–16284 Filed 8–16–05; 8:45 am]

BILLING CODE 4910–15–P

DEPARTMENT OF HOMELAND SECURITY

Coast Guard

33 CFR Part 165

[CGD13–05–034]

RIN 1625–AA87

Security Zone; Port Townsend Waterway, Puget Sound, WA, Naval Exercise

AGENCY: Coast Guard, DHS.

ACTION: Temporary final rule.

SUMMARY: The Coast Guard is establishing a temporary security zone for Naval and Army vessels while conducting ammunitions transfers in a designated area near Indian Island, Washington. The Coast Guard is taking this action to provide safety and security for Naval and Army vessels from terrorism, sabotage, other subversive acts, to allow sufficient maneuvering area for the vessel, and to maintain a sufficient blast radius from land in an event of an accident. Entry into this zone is prohibited unless authorized by the Captain of the Port,

Puget Sound or his designated representatives.

DATES: This rule is effective from 6 a.m. PDT on August 9, 2005 to 11:59 p.m. PDT on August 20, 2005.

ADDRESSES: Documents indicated in this preamble as being available in the docket are part of docket CGD13–05–034 and are available for inspection or copying at the Waterways Management Division, Coast Guard Sector Seattle, 1519 Alaskan Way South, Seattle, WA 98134, between 8 a.m. and 3 p.m., Monday through Friday, except Federal holidays.

FOR FURTHER INFORMATION CONTACT: Lieutenant Junior Grade Jessica Hagen, Waterways Management Division, Coast Guard Sector Seattle, at (206) 217–6040.

SUPPLEMENTARY INFORMATION:

Regulatory Information

We did not publish a notice of proposed rulemaking (NPRM) for this regulation. Under 5 U.S.C. 553(b)(B) and (d)(3), the Coast Guard finds that good cause exists for not publishing an NPRM and for making this rule effective less than 30 days after publication in the **Federal Register**. Publishing a NPRM would be contrary to public interest. Due to the nature of the event, the Coast Guard was not notified by the United States Navy of final details concerning the exercise until less than 30 days prior to the date of the event. Moreover, immediate action is necessary to safeguard Naval and Army vessels from terrorism, sabotage, other subversive acts, or accident. If normal notice and comment procedures were followed, this rule would not become effective soon enough to provide necessary protection to the Port Townsend Waterway and the Naval and Army vessels from the threats posed by hostile entities. For this reason, following normal rulemaking procedures in this case would be impracticable and contrary to the public interest.

Background and Purpose

Hostile entities continue to operate with the intent to harm U.S. National Security by attacking or sabotaging national security assets. The President has continued the national emergencies he declared following the September 11, 2001 terrorist attacks. 67 FR 58317 ((Sept. 13, 2002) (continuing national emergency with respect to terrorist attacks)); 67 FR 59447 ((Sept. 20, 2002) (continuing national emergency with respect to persons who commit, threaten to commit or support terrorism)); 68 FR 55189 ((Sept. 22, 2003) (continuing national emergency with respect to persons who commit, threaten to commit or support terrorism)).

The President also has found pursuant to law, including the Magnuson Act (50 U.S.C. 191 *et. seq.*), that the security of the United States is and continues to be endangered following the attacks (E.O. 13,273, 67 FR 56215 (Sept. 3, 2002) (security endangered by disturbances in international relations of U.S. and such disturbances continue to endanger such relations)). Moreover, the ongoing hostilities in Afghanistan and Iraq make it prudent for U.S. ports and waterways to be on a higher state of alert because the Al Qaeda organization and other similar organizations have declared an ongoing intention to conduct armed attacks on U.S. interests worldwide.

The Coast Guard, through this action, intends to assist the U.S. Navy in protecting assets in the Port Townsend Waterway by establishing security zones and notification requirements that will exclude persons and vessels from this waterway and from the immediate vicinity of these vessels. Entry into this zone will be prohibited unless authorized by the Captain of the Port or his designee. The Captain of the Port may be assisted by other Federal, State, or local agencies.

Discussion of Rule

This temporary final rule is established to maintain a distance in accordance with Naval Magazine Indian Island's (NAVMAG) ''Explosive Safety Quantity-Distance'' (ESQD) Arcs, and for safety and security concerns controls vessel movement in and around the Port Townsend Waterway, Puget Sound, WA.

This temporary final rule establishes a security zone controlling all vessel movement in the Port Townsend Waterway, Puget Sound, WA which includes all waters enclosed in an area with the following points: 48°04′40″ N, 122°44′31″ W; then northwesterly to 48°04′59.5″ N, 122°44′52″ W; then northwesterly to 48°05′35″ N, 122°45′17″ W; then southwesterly to 48°05′20″ N, 122°45′50″ W; then southeasterly to 48°02′39″ N, 122°44′46″ W; then easterly to 48°02′42″ N, 122°44′17″ W; then northerly along the shoreline of the Indian Island to the point of origin. [Datum: NAD 1983].

Regulatory Evaluation

This rule is not a ''significant regulatory action'' under section 3(f) of Executive Order 12866, Regulatory Planning and Review, and does not require an assessment of potential costs and benefits under section 6(a)(3) of that Order. The Office of Management and Budget has not reviewed it under that Order. It is not ''significant'' under the regulatory policies and procedures of the Department of Homeland Security (DHS).

Small Entities

Under the Regulatory Flexibility Act (5 U.S.C. 601–612), we have considered whether this rule would have a significant economic impact on a substantial number of small entities. The term ''small entities'' comprises small businesses, not-for-profit organizations that are independently owned and operated and are not dominant in their fields, and governmental jurisdictions with populations of less than 50,000. This zone will not have a significant economic impact due to its short duration and small area. Because the impacts of this proposal are expected to be minimal, the Coast Guard certifies under 5 U.S.C. 605(b) that this rule will not have a significant economic impact on a substantial number of small entities.

If you believe that your business, organization, or governmental jurisdiction qualifies as a small entity and that this rule would have a significant economic impact on it, please submit a comment (see **ADDRESSES**) explaining why you believe it qualifies and how and to what degree this rule would economically affect it.

Assistance for Small Entities

Under section 213(a) of the Small Business Regulatory Enforcement Fairness Act of 1996 (Pub. L. 104–121), we want to assist small entities in understanding the rule so that they could better evaluate its effects on them and participate in the rulemaking process.

Collection of Information

This rule calls for no new collection of information under the Paperwork Reduction Act of 1995 (44 U.S.C. 3501–3520).

Federalism

A rule has implications for federalism under Executive Order 13132, Federalism, if it has a substantial direct effect on State or local governments and would either preempt State law or impose a substantial direct cost of compliance on them. We have analyzed this rule under that Order and have determined that it does not have implications for federalism.

Unfunded Mandates Reform Act

The Unfunded Mandates Reform Act of 1995 (2 U.S.C. 1531–1538) requires

Federal agencies to assess the effects of their discretionary regulatory actions. In particular, the Act addresses actions that may result in the expenditure by a State, local, or tribal government, in the aggregate, or by the private sector of $100,000,000 or more in any one year. Though this rule will not result in such an expenditure, we do discuss the effects of this rule elsewhere in this preamble.

Taking of Private Property

This rule will not effect a taking of private property or otherwise have taking implications under Executive Order 12630, Governmental Actions and Interference with Constitutionally Protected Property Rights.

Civil Justice Reform

This rule meets applicable standards in sections 3(a) and 3(b)(2) of Executive Order 12988, Civil Justice Reform, to minimize litigation, eliminate ambiguity, and reduce burden.

Protection of Children

We have analyzed this rule under Executive Order 13045, Protection of Children from Environmental Health Risks and Safety Risks. This rule is not an economically significant rule and does not create an environmental risk to health or risk to safety that may disproportionately affect children.

Indian Tribal Governments

This rule does not have tribal implications under Executive Order 13175, Consultation and Coordination with Indian Tribal Governments, because it does not have a substantial direct effect on one or more Indian tribes, on the relationship between the Federal Government and Indian tribes, or on the distribution of power and responsibilities between the Federal Government and Indian tribes.

Energy Effects

We have analyzed this rule under Executive Order 13211, Actions Concerning Regulations That Significantly Affect Energy Supply, Distribution, or Use. We have determined that it is not a ''significant energy action'' under that order because it is not a ''significant regulatory action'' under Executive Order 12866 and is not likely to have a significant adverse effect on the supply, distribution, or use of energy. The Administrator of the Office of Information and Regulatory Affairs has not designated it as a significant energy action. Therefore, it does not require a Statement of Energy Effects under Executive Order 13211.

Technical Standards

The National Technology Transfer and Advancement Act (NTTAA) (15 U.S.C. 272 note) directs agencies to use voluntary consensus standards in their regulatory activities unless the agency provides Congress, through the Office of Management and Budget, with an explanation of why using these standards would be inconsistent with applicable law or otherwise impractical. Voluntary consensus standards are technical standards (*e.g.,* specifications of materials, performance, design, or operation; test methods; sampling procedures; and related management systems practices) that are developed or adopted by voluntary consensus standards bodies.

This rule does not use technical standards. Therefore, we did not consider the use of voluntary consensus standards.

Environment

We have analyzed this rule under Commandant Instruction M16475.lD, which guides the Coast Guard in complying with the National Environmental Policy Act of 1969 (NEPA) (42 U.S.C. 4321–4370f), and have concluded that there are no factors in this case that would limit the use of a categorical exclusion under section 2.B.2 of the Instruction. Therefore, this rule is categorically excluded, under figure 2–1, paragraph (34)(g), of the Instruction, from further environmental documentation. The environmental analysis and Categorical Exclusion Determination will be prepared and be available in the docket for inspection and copying where indicated under **ADDRESSES.** All standard environmental measures remain in effect.

List of Subjects in 33 CFR Part 165

Harbors, Marine safety, Navigation (water), Reporting and recordkeeping requirements, Security measures, Waterways.

Temporary Final Rule

■ For the reasons set out in the preamble, the Coast Guard amends Part 165 of Title 33, Code of Federal Regulations, as follows:

PART 165—[AMENDED]

■ 1. The authority citation for Part 165 continues to read as follows:

Authority: 33 U.S.C. 1226, 1231; 46 U.S.C. Chapter 701; 50 U.S.C. 191, 195; 33 CFR 1.05–1(g), 6.04–1, 6.04–6, and 160.5; Pub. L. 107–295, 116 Stat. 2064; Department of Homeland Security Delegation No. 0170.1.

■ 2. From 6 a.m. PDT on August 9, 2005, to 11:59 p.m. PDT on August 20, 2005, a temporary § 165.T13–014 is added to read as follows:

§ 165.T13–014 Security Zone Regulations, Port Townsend Waterway, Puget Sound, Washington.

(a) *Port Townsend Waterway Security Zone:* A security zone controlling all vessel movement exists in the Port Townsend Blair waterway, Puget Sound, WA which includes all waters enclosed by the following points: 48°40′40″ N, 122°44′31″ W; then northwesterly to 48°04′59.5″ N, 122°44′52″ W; then northwesterly to 48°05′35″ N, 122°45′17″ W; then southwesterly to 48°05′20″ N, 122°45′50″ W; then southeasterly to 48°02′39″ N, 122°44′46″ W; then easterly to 48°02′42″ N, 122°44′17″ W; then northerly along the shoreline of the Indian Island to the point of origin. [Datum: NAD 1983].

(b) *Regulations.* The general regulations in 33 CFR part 165, subpart D, apply to the security zone described in paragraph (a) of this section. No person or vessel may enter this security zone unless authorized by the Captain of the Port or his designated representatives. Vessels and persons granted authorization to enter the security zone must obey all lawful orders or directions of the Captain of the Port or his designated representatives. The Captain of the Port may be assisted by other federal, state, or local agencies in enforcing this section pursuant to 33 CFR 6.04–11.

Dated: August 4, 2005.

Stephen P. Metruck,

Captain, U.S. Coast Guard, Captain of the Port, Puget Sound.

[FR Doc. 05–16286 Filed 8–16–05; 8:45 am]

BILLING CODE 4910–15–P

POSTAL RATE COMMISSION

38 CFR 3001, 3002 AND 3003

[Docket No. RM2005–4; Order No. 1442]

Nomenclature Changes

AGENCY: Postal Rate Commission.

ACTION: Final rule.

SUMMARY: The Commission is adopting minor nomenclature changes in provisions appearing in the Code of Federal Regulations, including the rules of practice. The changes reflect the agency's relocation of its physical offices. Adoption of these changes will provide the public with accurate information about the Commission's new address.

DATES: These changes are effective August 29, 2005.

ADDRESSES: Submit comments electronically via the Commission's Filing Online system, which can be accessed at *http://www.prc.gov.*

FOR FURTHER INFORMATION CONTACT: Stephen L. Sharfman, General Counsel, 202–789–6818.

SUPPLEMENTARY INFORMATION: This order provides notice of the Commission's adoption of minor nomenclature changes in various provisions codified at 39 CFR parts 3001 through 3003. These changes are required because the Commission is relocating from 1333 H Street, NW., Suite 300, Washington, DC 20268–0001 to 901 New York Avenue, NW., Suite 200, Washington, DC 20268–0001. The effective date of the changes is August 29, 2005. The revisions do not entail any changes to existing telephone numbers, ZIP Code, e-mail addresses or the Commission's Web site address (*http://www.prc.gov*).

I. Physical address

References to the Commission's current physical address are being replaced whenever they appear with the Commission's new physical address. This affects 39 CFR 3001.9; 43(e)(4)(i); 3001.110 and 116; 39 CFR 3002.3(c); and 39 CFR 3003.3.

II. Notice of Adoption of Changes and Effective Date

Given the nature and limited extent of these changes, the Commission is adopting them as a direct final rule. The effective date is August 29, 2005, which coincides with the continuation of official business at the new location. The Commission directs the Secretary to arrange for publication of this order in the **Federal Register**.

It is ordered:

1. The Commission adopts the nomenclature changes referred to in the body of this order, effective August 29, 2005.

2. The Secretary shall arrange for publication of this order in the **Federal Register**.

Issued: August 10, 2005.

By the Commission.

Steven W. Williams,

Secretary.

List of Subjects in 39 CFR Parts 3001, 3002 and 3003

Administrative practice and procedure, Postal Service.

■ For the reasons stated in the preamble, the Commission amends 39 CFR parts 3001, 3002, and 3003 as follows:

PART 3001—RULES OF PRACTICE AND PROCEDURE

■ 1. The authority citation for part 3001 continues to read as follows:

Authority: 39 U.S.C. 404(b); 3603; 3622–24; 3661; 3662; 3663.

■ 2. Amend part 3001 by replacing the words ''1333 H Street NW., Suite 3000,'' wherever they appear with the words ''901 New York Avenue NW., Suite 200.''

PART 3002—RULES OF PRACTICE AND PROCEDURE

■ 1. The authority citation for part 3002 continues to read as follows:

Authority: 39 U.S.C. 3603; 5 U.S.C. 552.

■ 2. Amend part 3002 by replacing the words ''1333 H Street NW., Suite 300,'' wherever they appear with the words ''901 New York Avenue NW., Suite 200,''.

PART 3003–PRIVACY ACT RULES

■ 1. The authority citation for part 3003 continues to read as follows:

Authority: Privacy Act of 1974 (Pub. L. 93–579); 5 U.S.C. 552a.

■ 2. Amend part 3003 by replacing the words ''1333 H Street NW., Suite 300,'' wherever they appear with the words ''901 New York Avenue NW., Suite 200.''

[FR Doc. 05–16219 Filed 8–16–05; 8:45 am]

BILLING CODE 7910–FW–M

ENVIRONMENTAL PROTECTION AGENCY

40 CFR Part 52

[R03–OAR–2005–VA–0004; FRL–7954–1]

Approval and Promulgation of Air Quality Implementation Plans; Virginia; Attainment Demonstration for the Roanoke Metropolitan Statistical Area (MSA) Ozone Early Action Compact Area

AGENCY: Environmental Protection Agency (EPA).

ACTION: Final rule.

SUMMARY: EPA is taking final action to approve a revision to the Commonwealth of Virginia State Implementation Plan (SIP). This revision consists of an Early Action Compact (EAC) Plan that will enable the Roanoke Metropolitan Statistical Area (MSA) Ozone EAC Area to demonstrate attainment and maintenance of the 8-hour ozone national ambient air quality (NAAQS) standard. This action is being taken under the Clean Air Act (CAA or Act).

DATES: This final rule is effective on September 16, 2005.

ADDRESSES: EPA has established a docket for this action under Regional Material in EDocket (RME) ID Number R03–OAR–2005–VA–0004. All documents in the docket are listed in the RME index at *http://www.docket.epa.gov/rmepub/.* Once in the system, select ''quick search,'' then key in the appropriate RME identification number. Although listed in the electronic docket, some information is not publicly available, *i.e.*, confidential business information (CBI) or other information whose disclosure is restricted by statute. Certain other material, such as copyrighted material, is not placed on the Internet and will be publicly available only in hard copy form. Publicly available docket materials are available either electronically in RME or in hard copy for public inspection during normal business hours at the Air Protection Division, U.S. Environmental Protection Agency, Region III, 1650 Arch Street, Philadelphia, Pennsylvania 19103. Copies of the State submittal are available at the Virginia Department of Environmental Quality, 629 East Main Street, Richmond, Virginia 23219.

FOR FURTHER INFORMATION CONTACT: Ellen Wentworth, (215) 814–2034, or by e-mail at *wentworth.ellen@epa.gov.*

SUPPLEMENTARY INFORMATION:

I. Background

On May 17, 2005 (70 FR 28252), EPA published a notice of proposed rulemaking (NPR) for the Commonwealth of Virginia. The NPR proposed approval of the attainment demonstration and Early Action Plan (EAP) for the Roanoke MSA Ozone EAC Area, which consists of the Counties of Botetourt and Roanoke, the Cities of Roanoke and Salem, and the Town of Vinton. The formal SIP revision was submitted by the Virginia Department of Environmental Quality on December 21, 2004, and supplemented on February 17, 2005. Other specifics of the Commonwealth's SIP revision for the Roanoke MSA Ozone EAC Area, and the rationale for EPA's proposed action are explained in the NPR and will not be restated here. On June 16, 2005, EPA received adverse comments on its May 17, 2005 NPR. A summary of the comments submitted and EPA's responses are provided in Section II of this document.

II. Summary of Public Comments and EPA Responses

Comment: Several commenters expressed support for the compact

process, the goal of clean air sooner, the incentives and flexibility the program provides for encouraging early reductions of ozone-forming pollution, and the deferred effective date of nonattainment designations.

Response: EPA acknowledges the comments of support for our final action.

Comment: One commenter opposes the approval of the SIP revision for the Roanoke MSA Ozone EAC Area because the Area is in violation of the 8-hour ozone standard. The commenter also states that the SIP revision provides for the deferment of a nonattainment designation until a future date, potentially as late as December 31, 2007, and relieves the Area of obligations under Title I, part D of the CAA. Although the commenter is supportive of the goal of addressing proactively the public health concerns associated with ozone pollution, the commenter believes that EPA does not have the legal authority to defer effective dates of designations or to allow areas to be relieved of obligations under Title I, part D of the CAA while they are violating the 8-hour ozone standard, or are designated nonattainment of that standard.

Response: EPA first announced the EAC process in a June 19, 2002 letter from Gregg Cooke, Administrator, EPA Region VI to Robert Huston, Texas Commission on Environmental Quality, followed by a November 14, 2002 memorandum from Jeffrey R. Holmstead, Assistant Administrator, EPA's Office of Air and Radiation to the EPA Regional Administrators, entitled, ''Schedule for 8-Hour Ozone Designations and its Effect on Early Action Compacts.'' EPA formalized the EAC process in the designation rulemaking on April 30, 2004 (69 FR 23858). In the designation rule, EPA designated 14 EAC areas as nonattainment, but deferred the effective date of the designation until September 30, 2005. The EAC program gives local areas the flexibility to develop their own approach to meeting the 8-hour ozone standard, provided the participating communities are serious in their commitment to control emissions from local sources earlier than the CAA would otherwise require. By involving diverse stakeholders, including representatives from industry, local and State governments, and local environmental citizens' groups, a number of communities are discussing for the first time the need for regional cooperation in solving air quality problems that affect the health and welfare of its citizens. People living in these areas that achieve reductions in pollution levels sooner will enjoy the health benefits of cleaner air sooner than might otherwise occur. EPA believes this proactive approach involving multiple, diverse stakeholders is beneficial to the citizens of the area by raising awareness of the need to adopt and implement measures that will reduce emissions and improve air quality.

EPA disagrees with the comments that this action on the SIP revision for the Roanoke MSA Ozone EAC Area defers the nonattainment designation for this Area. In our May 17, 2005 NPR (70 FR 28252), EPA proposed approval of an attainment demonstration and EAP SIP revision for the Roanoke MSA Ozone EAC Area. This SIP revision includes an attainment demonstration which demonstrates attainment of the 8-hour ozone NAAQS in the Roanoke MSA Ozone EAC Area by December 31, 2007, and also demonstrates maintenance of the 8-hour NAAQS for five years following the attainment date. As noted in the proposed action, approval of the attainment demonstration and EAP constitutes one of several milestones that an area must meet in order to participate in the EAC process. While approval of this plan is a prerequisite for an extension of the deferred effective date of the designation of this Area, *see* 40 CFR 81.300(e)(3), neither the proposed approval of this SIP revision nor this final action approving the SIP revision purports to extend the deferral of the effective date of the nonattainment designation for this Area. In a separate rulemaking (69 FR 23858, April 30, 2004), EPA deferred the effective date of the air quality designations of all 14 EAC areas to September 30, 2005. In the April 30, 2004 final rule, EPA responded to comments received during the comment period for this final rule. In a separate proposed rule (70 FR 33409, June 8, 2005), EPA proposed to extend the deferral of the effective date of the air quality designations for these 14 EAC areas. EPA will consider comments regarding its legal authority in the final rule associated with the June 8, 2005 proposed rule.

Regardless of whether EPA's separate actions deferring the effective date of the nonattainment designation for this Area are appropriate, EPA sees no basis to disapprove the attainment and maintenance plan. The provisions of the statute generally provide that areas must demonstrate attainment and maintenance of the NAAQS. *See, e.g.*, CAA section 110(a)(1) (requiring areas to submit plans providing for ''implementation, maintenance, and enforcement'' of each NAAQS) and CAA section 172(c)(1) (requiring nonattainment areas to submit plans demonstrating attainment of the NAAQS). The commenter has provided no substantive reason why this plan does not demonstrate attainment and maintenance of the 8-hour standard. Therefore, this action approving the attainment demonstration and maintenance plan is appropriate.

III. General Information Pertaining to SIP Submittals From the Commonwealth of Virgina

In 1995, Virginia adopted legislation that provides, subject to certain conditions, for an environmental assessment (audit) ''privilege'' for voluntary compliance evaluations performed by a regulated entity. The legislation further addresses the relative burden of proof for parties either asserting the privilege or seeking disclosure of documents for which the privilege is claimed. Virginia's legislation also provides, subject to certain conditions, for a penalty waiver for violations of environmental laws when a regulated entity discovers such violations pursuant to a voluntary compliance evaluation and voluntarily discloses such violations to the Commonwealth and takes prompt and appropriate measures to remedy the violations. Virginia's Voluntary Environmental Assessment Privilege Law, Va. Code Sec. 10.1–1198, provides a privilege that protects from disclosure documents and information about the content of those documents that are the product of a voluntary environmental assessment. The Privilege Law does not extend to documents or information: (1) That are generated or developed before the commencement of a voluntary environmental assessment; (2) that are prepared independently of the assessment process; (3) that demonstrate a clear, imminent and substantial danger to the public health or environment; or (4) that are required by law.

On January 12, 1998, the Commonwealth of Virginia Office of the Attorney General provided a legal opinion that States that the Privilege law, Va. Code Sec. 10.1–1198, precludes granting a privilege to documents and information ''required by law,'' including documents and information ''required by Federal law to maintain program delegation, authorization or approval,'' since Virginia must ''enforce Federally authorized environmental programs in a manner that is no less stringent than their Federal counterparts * * *.'' The opinion concludes that ''[r]egarding § 10.1–1198, therefore, documents or other information needed

for civil or criminal enforcement under one of these programs could not be privileged because such documents and information are essential to pursuing enforcement in a manner required by Federal law to maintain program delegation, authorization or approval.''

Virginia's Immunity law, Va. Code Sec. 10.1–1199, provides that ''[t]o the extent consistent with requirements imposed by Federal law,'' any person making a voluntary disclosure of information to a State agency regarding a violation of an environmental statute, regulation, permit, or administrative order is granted immunity from administrative or civil penalty. The Attorney General's January 12, 1998 opinion states that the quoted language renders this statute inapplicable to enforcement of any federally authorized programs, since ''no immunity could be afforded from administrative, civil, or criminal penalties because granting such immunity would not be consistent with Federal law, which is one of the criteria for immunity.''

Therefore, EPA has determined that Virginia's Privilege and Immunity statutes will not preclude the Commonwealth from enforcing its program consistent with the Federal requirements. In any event, because EPA has also determined that a State audit privilege and immunity law can affect only State enforcement and cannot have any impact on Federal enforcement authorities, EPA may at any time invoke its authority under the Clean Air Act, including, for example, sections 113, 167, 205, 211 or 213, to enforce the requirements or prohibitions of the State plan, independently of any State enforcement effort. In addition, citizen enforcement under section 304 of the Clean Air Act is likewise unaffected by this, or any, State audit privilege or immunity law.

IV. Final Action

EPA is approving the attainment demonstration and the EAP for the Roanoke MSA Ozone EAC Area. The modeling of the ozone and ozone precursor emissions from sources affecting the Roanoke MSA Ozone EAC Area demonstrates that the specified control strategies will provide for attainment of the 8-hour ozone NAAQS by December 31, 2007, and maintenance of that standard through 2012.

V. Statutory and Executive Order Reviews

A. General Requirements

Under Executive Order 12866 (58 FR 51735, October 4, 1993), this action is not a ''significant regulatory action'' and therefore is not subject to review by the Office of Management and Budget. For this reason, this action is also not subject to Executive Order 13211, ''Actions Concerning Regulations That Significantly Affect Energy Supply, Distribution, or Use'' (66 FR 28355, May 22, 2001). This action merely approves State law as meeting Federal requirements and imposes no additional requirements beyond those imposed by State law. Accordingly, the Administrator certifies that this rule will not have a significant economic impact on a substantial number of small entities under the Regulatory Flexibility Act (5 U.S.C. 601 *et seq.*). Because this rule approves pre-existing requirements under State law and does not impose any additional enforceable duty beyond that required by State law, it does not contain any unfunded mandate or significantly or uniquely affect small governments, as described in the Unfunded Mandates Reform Act of 1995 (Pub. L. 104–4). This rule also does not have tribal implications because it will not have a substantial direct effect on one or more Indian tribes, on the relationship between the Federal Government and Indian tribes, or on the distribution of power and responsibilities between the Federal Government and Indian tribes, as specified by Executive Order 13175 (65 FR 67249, November 9, 2000). This action also does not have federalism implications because it does not have substantial direct effects on the States, on the relationship between the National Government and the States, or on the distribution of power and responsibilities among the various levels of government, as specified in Executive Order 13132 (64 FR 43255, August 10, 1999). This action merely approves a State rule implementing a Federal requirement, and does not alter the relationship or the distribution of power and responsibilities established in the Clean Air Act. This rule also is not subject to Executive Order 13045 ''Protection of Children from Environmental Health Risks and Safety Risks'' (62 FR 19885, April 23, 1997), because it is not economically significant.

In reviewing SIP submissions, EPA's role is to approve State choices, provided that they meet the criteria of the Clean Air Act. In this context, in the absence of a prior existing requirement for the State to use voluntary consensus standards (VCS), EPA has no authority to disapprove a SIP submission for failure to use VCS. It would thus be inconsistent with applicable law for EPA, when it reviews a SIP submission, to use VCS in place of a SIP submission that otherwise satisfies the provisions of the Clean Air Act. Thus, the requirements of section 12(d) of the National Technology Transfer and Advancement Act of 1995 (15 U.S.C. 272 note) do not apply. This rule does not impose an information collection burden under the provisions of the Paperwork Reduction Act of 1995 (44 U.S.C. 3501 *et seq.*).

B. Submission to Congress and the Comptroller General

The Congressional Review Act, 5 U.S.C. 801 *et seq.*, as added by the Small Business Regulatory Enforcement Fairness Act of 1996, generally provides that before a rule may take effect, the agency promulgating the rule must submit a rule report, which includes a copy of the rule, to each House of the Congress and to the Comptroller General of the United States. EPA will submit a report containing this rule and other required information to the U.S. Senate, the U.S. House of Representatives, and the Comptroller General of the United States prior to publication of the rule in the **Federal Register**. This rule is not a ''major rule'' as defined by 5 U.S.C. 804(2).

C. Petitions for Judicial Review

Under section 307(b)(1) of the Clean Air Act, petitions for judicial review of this action must be filed in the United States Court of Appeals for the appropriate circuit by October 17, 2005. Filing a petition for reconsideration by the Administrator of this final rule does not affect the finality of this rule for the purposes of judicial review nor does it extend the time within which a petition for judicial review may be filed, and shall not postpone the effectiveness of such rule or action.

This action, approving the attainment demonstration and the EAP for the Roanoke MSA Ozone EAC Area, may not be challenged later in proceedings to enforce its requirements. (See section 307(b)(2).)

List of Subjects in 40 CFR Part 52

Environmental protection, Air pollution control, Nitrogen dioxide, Ozone, Reporting and recordkeeping requirements, Volatile organic compounds.

Dated: August 9, 2005.

Donald S. Welsh,

Regional Administrator, Region III.

■ 40 CFR part 52 is amended as follows:

PART 52—[AMENDED]

■ 1. The authority citation for part 52 continues to read as follows:

Authority: 42 U.S.C. 7401 *et seq.*

Subpart VV—Virginia

■ 2. In § 52.2420, the entry for the Attainment Demonstration and the Early Action Plan for the Roanoke MSA Early Action Compact Area in paragraph (e) is added at the end of the table to read as follows:

§ 52.2420 Identification of plan.

* * * * *

(e) * * *

EPA APPROVED NONREGULATORY AND QUASI-REGULATORY MATERIAL

Name of non-regulatory SIP revision	Applicable geographic area	State submittal date	EPA approval date	Additional explanation
* *	* *	*	*	*
Attainment Demonstration and Early Action Plan for the Roanoke MSA Ozone Early Action Compact Area.	Botetourt County, Roanoke City, Roanoke County, and Salem City.	12/21/04, 2/15/05	8/17/05 [Insert **Federal Register** page number where the document begins].	

[FR Doc. 05–16294 Filed 8–16–05; 8:45 am]

BILLING CODE 6560–50–P

ENVIRONMENTAL PROTECTION AGENCY

40 CFR Part 52

[R03–OAR–2005–VA–0005; FRL–7954–4]

Approval and Promulgation of Air Quality Implementation Plans; Virginia; Attainment Demonstration for the Northern Shenandoah Valley Ozone Early Action Compact Area

AGENCY: Environmental Protection Agency (EPA).

ACTION: Final rule.

SUMMARY: EPA is taking final action to approve a revision to the Commonwealth of Virginia State Implementation Plan (SIP). This revision consists of an Early Action Compact (EAC) Plan that will enable the Northern Shenandoah Valley Ozone EAC Area to demonstrate attainment and maintenance of the 8-hour ozone national ambient air quality (NAAQS) standard. This action is being taken under the Clean Air Act (CAA or Act).

DATES: This final rule is effective on September 16, 2005.

ADDRESSES: EPA has established a docket for this action under Regional Material in EDocket (RME) ID Number R03–OAR–2005–VA–0005. All documents in the docket are listed in the RME index at *http://www.docket.epa.gov/rmepub/*. Once in the system, select ''quick search,'' then key in the appropriate RME identification number. Although listed in the electronic docket, some information is not publicly available, *i.e.*, confidential business information (CBI) or other information whose disclosure is restricted by statute. Certain other material, such as copyrighted material, is not placed on the Internet and will be publicly available only in hard copy form. Publicly available docket materials are available either electronically in RME or in hard copy for public inspection during normal business hours at the Air Protection Division, U.S. Environmental Protection Agency, Region III, 1650 Arch Street, Philadelphia, Pennsylvania 19103. Copies of the State submittal are available at the Virginia Department of Environmental Quality, 629 East Main Street, Richmond, Virginia 23219.

FOR FURTHER INFORMATION CONTACT: Rose Quinto, (215) 814–2182, or by e-mail at *quinto.rose@epa.gov.*

SUPPLEMENTARY INFORMATION:

I. Background

On May 17, 2005 (70 FR 28260), EPA published a notice of proposed rulemaking (NPR) for the Commonwealth of Virginia. The NPR proposed approval of the attainment demonstration and the Early Action Plan (EAP) for the Northern Shenandoah Valley Ozone EAC Area, which consists of the City of Winchester and Frederick County. The formal SIP revision was submitted by the Virginia Department of Environmental Quality on December 20, 2004 and supplemented on February 15, 2005. Other specifics of the Commonwealth's SIP revision for the Northern Shenandoah Valley Ozone EAC Area, and the rationale for EPA's proposed action are explained in the NPR and will not be restated here. On June 16, 2005, EPA received adverse comments on its May 17, 2005 NPR. A summary of the comments submitted and EPA's responses are provided in Section II of this document.

II. Summary of Public Comments and EPA Responses

Comment: Several commenters expressed support for the compact process, the goal of clean air sooner, the incentives and flexibility the program provides for encouraging early reductions of ozone-forming pollution, and the deferred effective date of nonattainment designations.

Response: EPA acknowledges the comments of support for our final action.

Comment: One commenter opposes the approval of the SIP revision for the Northern Shenandoah Valley Ozone EAC Area because the Area is in violation of the 8-hour ozone standard. The commenter also states that the SIP revision provides for the deferment of a nonattainment designation until a future date, potentially as late as December 31, 2007, and relieves the Area of obligations under Title I, part D of the CAA. Although the commenter is supportive of the goal of addressing proactively the public health concerns associated with ozone pollution, the commenter believes that EPA does not have the legal authority to defer effective dates of designations or to allow areas to be relieved of obligations under Title I, part D of the CAA while they are violating the 8-hour ozone standard, or are designated nonattainment of that standard.

Response: EPA first announced the EAC process in a June 19, 2002 letter from Gregg Cooke, Administrator, EPA Region VI to Robert Huston, Texas Commission on Environmental Quality, followed by a November 14, 2002 memorandum from Jeffrey R. Holmstead, Assistant Administrator, EPA's Office of Air and Radiation to the EPA Regional Administrators, entitled, ''Schedule for 8-Hour Ozone Designations and its Effect on Early Action Compacts.'' EPA formalized the EAC process in the designation rulemaking on April 30, 2004 (69 FR 23858). In the designation rule, EPA designated 14 EAC areas as nonattainment, but deferred the

effective date of the designation until September 30, 2005. The EAC program gives local areas the flexibility to develop their own approach to meeting the 8-hour ozone standard, provided the participating communities are serious in their commitment to control emissions from local sources earlier than the CAA would otherwise require. By involving diverse stakeholders, including representatives from industry, local and State governments, and local environmental citizens' groups, a number of communities are discussing for the first time the need for regional cooperation in solving air quality problems that affect the health and welfare of its citizens. People living in these areas that realize reductions in pollution levels sooner will enjoy the health benefits of cleaner air sooner than might otherwise occur. EPA believes this proactive approach involving multiple, diverse stakeholders is beneficial to the citizens of the area by raising awareness of the need to adopt and implement measures that will reduce emissions and improve air quality.

EPA disagrees with the comments that this action on the SIP revision for the Northern Shenandoah Valley Ozone EAC Area defers the nonattainment designation for this Area. In our May 17, 2005 NPR (70 FR 28260), EPA proposed approval of an attainment demonstration and EAP SIP revision for the Northern Shenandoah Valley Ozone EAC Area. This SIP revision includes an attainment demonstration which demonstrates attainment of the 8-hour ozone NAAQS in the Northern Shenandoah Valley Ozone EAC Area by December 31, 2007, and also demonstrates maintenance of the 8-hour NAAQS for five years following the attainment date. As noted in the proposed action, approval of the attainment demonstration and EAP constitutes one of several milestones that an area must meet in order to participate in the EAC process. While approval of this plan is a prerequisite for an extension of the deferred effective date of the designation of this Area, *see* 40 CFR 81.300(e)(3), neither the proposed approval of this SIP nor this final action approving the SIP purports to extend the deferral of the effective date of the nonattainment designation for this Area. In a separate rulemaking (69 FR 23858, April 30, 2004), EPA deferred the effective date of the air quality designations of all 14 EAC areas to September 30, 2005. In the April 30, 2004 final rule, EPA responded to comments received during the comment period for this final rule. In a separate proposed rule (70 FR 33409, June 8, 2005), EPA proposed to extend the deferral of the effective date of the air quality designations for these 14 EAC areas. EPA will consider comments regarding its legal authority in the final rule associated with the June 8, 2005 proposed rule.

Regardless of whether EPA's separate actions deferring the effective date of the nonattainment designation for this Area are appropriate, EPA sees no basis to disapprove the attainment and maintenance plan. The provisions of the statute generally provide that areas must demonstrate attainment and maintenance of the NAAQS. *See e.g.*, CAA section 110(a)(1) (requiring areas to submit plans providing for ''implementation, maintenance, and enforcement'' of each NAAQS) and CAA section 172(c)(1) (requiring nonattainment areas to submit plans demonstrating attainment of the NAAQS). The commenter has provided no substantive reason why this plan does not demonstrate attainment and maintenance of the 8-hour standard. Therefore, this action approving the attainment demonstration and maintenance plan is appropriate.

III. General Information Pertaining to SIP Submittals From the Commonwealth of Virginia

In 1995, Virginia adopted legislation that provides, subject to certain conditions, for an environmental assessment (audit) ''privilege'' for voluntary compliance evaluations performed by a regulated entity. The legislation further addresses the relative burden of proof for parties either asserting the privilege or seeking disclosure of documents for which the privilege is claimed. Virginia's legislation also provides, subject to certain conditions, for a penalty waiver for violations of environmental laws when a regulated entity discovers such violations pursuant to a voluntary compliance evaluation and voluntarily discloses such violations to the Commonwealth and takes prompt and appropriate measures to remedy the violations. Virginia's Voluntary Environmental Assessment Privilege Law, Va. Code Sec. 10.1–1198, provides a privilege that protects from disclosure documents and information about the content of those documents that are the product of a voluntary environmental assessment. The Privilege Law does not extend to documents or information: (1) That are generated or developed before the commencement of a voluntary environmental assessment; (2) that are prepared independently of the assessment process; (3) that demonstrate a clear, imminent and substantial danger to the public health or environment; or (4) that are required by law.

On January 12, 1998, the Commonwealth of Virginia Office of the Attorney General provided a legal opinion that states that the Privilege Law, Va. Code Sec. 10.1–1198, precludes granting a ''required by Federal law to maintain program delegation, authorization or approval,'' since Virginia must ''enforce Federally authorized environmental programs in a manner that is no less stringent than their Federal counterparts * * *.'' The opinion concludes that ''regarding § 10.1–1198, therefore, documents or other information needed for civil or criminal enforcement under one of these programs could not be privileged because such documents and information are essential to pursuing enforcement in a manner required by Federal law to maintain program delegation, authorization or approval.''

Virginia's Immunity law, Va. Code Sec. 10.1–1199, provides that ''to the extent consistent with requirements imposed by Federal law,'' any person making a voluntary disclosure of information to a state agency regarding a violation of an environmental statute, regulation, permit, or administrative order is granted immunity from administrative or civil penalty. The Attorney General's January 12, 1998 opinion states that the quoted language renders this statute inapplicable to enforcement of any federally authorized programs, since ''no immunity could be afforded from administrative, civil, or criminal penalties because granting such immunity would not be consistent with Federal law, which is one of the criteria for immunity.''

Therefore, EPA has determined that Virginia's Privilege and Immunity statutes will not preclude the Commonwealth from enforcing its program consistent with the Federal requirements. In any event, because EPA has also determined that a State audit privilege and immunity law can affect only State enforcement and cannot have any impact on Federal enforcement authorities, EPA may at any time invoke its authority under the Clean Air Act, including, for example, sections 113, 167, 205, 211 or 213, to enforce the requirements or prohibitions of the State plan, independently of any State enforcement effort. In addition, citizen enforcement under section 304 of the Clean Air Act is likewise unaffected by this, or any, State audit privilege or immunity law.

IV. Final Action

EPA is approving the attainment demonstration and the EAP for the Northern Shenandoah Valley Ozone EAC Area. The modeling of the ozone and ozone precursor emissions from sources affecting the Northern Shenandoah Valley Ozone EAC Area demonstrates that the specified control strategies will provide for attainment of the 8-hour ozone NAAQS by December 31, 2007 and maintenance of that standard through 2012.

V. Statutory and Executive Order Reviews

A. General Requirements

Under Executive Order 12866 (58 FR 51735, October 4, 1993), this action is not a ''significant regulatory action'' and therefore is not subject to review by the Office of Management and Budget. For this reason, this action is also not subject to Executive Order 13211, ''Actions Concerning Regulations That Significantly Affect Energy Supply, Distribution, or Use'' (66 FR 28355, May 22, 2001). This action merely approves State law as meeting Federal requirements and imposes no additional requirements beyond those imposed by State law. Accordingly, the Administrator certifies that this rule will not have a significant economic impact on a substantial number of small entities under the Regulatory Flexibility Act (5 U.S.C. 601 *et seq.*). Because this rule approves pre-existing requirements under State law and does not impose any additional enforceable duty beyond that required by State law, it does not contain any unfunded mandate or significantly or uniquely affect small governments, as described in the Unfunded Mandates Reform Act of 1995 (Pub. L. 104–4). This rule also does not have tribal implications because it will not have a substantial direct effect on one or more Indian tribes, on the relationship between the Federal Government and Indian tribes, or on the distribution of power and responsibilities between the Federal Government and Indian tribes, as specified by Executive Order 13175 (65 FR 67249, November 9, 2000). This action also does not have federalism implications because it does not have substantial direct effects on the States, on the relationship between the national government and the States, or on the distribution of power and responsibilities among the various levels of government, as specified in Executive Order 13132 (64 FR 43255, August 10, 1999). This action merely approves a State rule implementing a Federal standard, and does not alter the relationship or the distribution of power and responsibilities established in the Clean Air Act. This rule also is not subject to Executive Order 13045 ''Protection of Children from Environmental Health Risks and Safety Risks'' (62 FR 19885, April 23, 1997), because it is not economically significant.

In reviewing SIP submissions, EPA's role is to approve State choices, provided that they meet the criteria of the Clean Air Act. In this context, in the absence of a prior existing requirement for the State to use voluntary consensus standards (VCS), EPA has no authority to disapprove a SIP submission for failure to use VCS. It would thus be inconsistent with applicable law for EPA, when it reviews a SIP submission, to use VCS in place of a SIP submission that otherwise satisfies the provisions of the Clean Air Act. Thus, the requirements of section 12(d) of the National Technology Transfer and Advancement Act of 1995 (15 U.S.C. 272 note) do not apply. This rule does not impose an information collection burden under the provisions of the Paperwork Reduction Act of 1995 (44 U.S.C. 3501 *et seq.*).

B. Submission to Congress and the Comptroller General

The Congressional Review Act, 5 U.S.C. 801 *et seq.*, as added by the Small Business Regulatory Enforcement Fairness Act of 1996, generally provides that before a rule may take effect, the agency promulgating the rule must submit a rule report, which includes a copy of the rule, to each House of the Congress and to the Comptroller General of the United States. EPA will submit a report containing this rule and other required information to the U.S. Senate, the U.S. House of Representatives, and the Comptroller General of the United States prior to publication of the rule in the **Federal Register**. This rule is not a ''major rule'' as defined by 5 U.S.C. 804(2).

C. Petitions for Judicial Review

Under section 307(b)(1) of the Clean Air Act, petitions for judicial review of this action must be filed in the United States Court of Appeals for the appropriate circuit by October 17, 2005. Filing a petition for reconsideration by the Administrator of this final rule does not affect the finality of this rule for the purposes of judicial review nor does it extend the time within which a petition for judicial review may be filed, and shall not postpone the effectiveness of such rule or action.

This action, approving the attainment demonstration and the EAP for the Northern Shenandoah Valley Ozone EAC Area, may not be challenged later in proceedings to enforce its requirements. (See section 307(b)(2).)

List of Subjects in 40 CFR Part 52

Environmental protection, Air pollution control, Nitrogen dioxide, Ozone, Reporting and recordkeeping requirements, Volatile organic compounds.

Dated: August 9, 2005.

Donald S. Welsh,

Regional Administrator, Region III.

■ 40 CFR part 52 is amended as follows:

PART 52—[AMENDED]

■ 1. The authority citation for part 52 continues to read as follows:

Authority: 42 U.S.C. 7401 *et seq.*

Subpart VV—Virginia

■ 2. In § 52.2420, the entry for the Attainment Demonstration and Early Action Plan for the Northern Shenandoah Valley Ozone Early Action Compact Area in paragraph (e) is added at the end of the table to read as follows:

§ 52.2420 Identification of plan.

* * * * *

(e) * * *

EPA APPROVED NONREGULATORY AND QUASI-REGULATORY MATERIAL

Name of non-regulatory SIP revision	Applicable geographic area	State submittal date	EPA approval date	Additional explanation

EPA APPROVED NONREGULATORY AND QUASI-REGULATORY MATERIAL—Continued

Name of non-regulatory SIP revision	Applicable geographic area	State submittal date	EPA approval date	Additional explanation
* *	* *	*	*	*
Attainment Demonstration and Early Action Plan for the Northern Shenandoah Valley Ozone Early Action Compact Area.	City of Winchester and Frederick County.	12/20/04, 02/15/05	8/17/05 [Insert **Federal Register** page number where the document begins].	.....

[FR Doc. 05–16293 Filed 8–16–05; 8:45 am]

BILLING CODE 6560–50–P

ENVIRONMENTAL PROTECTION AGENCY

40 CFR Part 52

[R03–OAR–2005–MD–0004; FRL–7954–2]

Approval and Promulgation of Air Quality Implementation Plans; Maryland; Attainment Demonstration for the Washington County Ozone Early Action Compact Area

AGENCY: Environmental Protection Agency (EPA).

ACTION: Final rule.

SUMMARY: EPA is taking final action to approve a revision to the State of Maryland State Implementation Plan (SIP). This revision consists of an Early Action Compact (EAC) Plan that will enable the Washington County, Maryland Ozone EAC Area to demonstrate attainment and maintenance of the 8-hour ozone national ambient air quality (NAAQS) standard. This action is being taken under the Clean Air Act (CAA or Act).

DATES: This final rule is effective on September 16, 2005.

ADDRESSES: EPA has established a docket for this action under Regional Material in EDocket (RME) ID Number R03–OAR–2005–MD–0004. All documents in the docket are listed in the RME index at *http://www.docket.epa.gov/rmepub/*. Once in the system, select ''quick search,'' then key in the appropriate RME identification number. Although listed in the electronic docket, some information is not publicly available, *i.e.*, confidential business information (CBI) or other information whose disclosure is restricted by statute. Certain other material, such as copyrighted material, is not placed on the Internet and will be publicly available only in hard copy form. Publicly available docket materials are available either electronically in RME or in hard copy for public inspection during normal business hours at the Air Protection Division, U.S. Environmental Protection Agency, Region III, 1650 Arch Street, Philadelphia, Pennsylvania 19103. Copies of the State submittal are available at the Maryland Department of the Environment, 1800 Washington Boulevard, Suite 705, Baltimore, Maryland 21230.

FOR FURTHER INFORMATION CONTACT: Ellen Wentworth, (215) 814–2034, or by e-mail at *wentworth.ellen@epa.gov.*

SUPPLEMENTARY INFORMATION:

I. Background

On May 17, 2005 (70 FR 28256), EPA published a notice of proposed rulemaking (NPR) for the State of Maryland. The NPR proposed approval of the attainment demonstration and the Early Action Plan (EAP) for the Washington County Ozone EAC Area. The formal SIP revision was submitted by the Maryland Department of the Environment on December 20, 2004 and supplemented on February 28, 2005. Other specifics of the State's SIP revision for the Washington County Ozone EAC Area, and the rationale for EPA's proposed action are explained in the NPR and will not be restated here. On June 16, 2005, EPA received adverse comments on its May 17, 2005 NPR. A summary of the comments submitted and EPA's responses are provided in Section II of this document.

II. Summary of Public Comments and EPA Responses

Comment: One commenter opposes the approval of the SIP revision for the Washington County Ozone EAC Area because the Area is in violation of the 8-hour ozone standard. The commenter also states that the SIP revision provides for the deferment of a nonattainment designation until a future date, potentially as late as December 31, 2007, and relieves the Area of obligations under Title I, part D of the CAA. Although the commenter is supportive of the goal of addressing proactively the public health concerns associated with ozone pollution, the commenter believes that EPA does not have the legal authority to defer effective dates of designations or to allow areas to be relieved of obligations under Title I, part D of the CAA while they are violating the 8-hour ozone standard, or are designated nonattainment of that standard.

Response: EPA first announced the EAC process in a June 19, 2002 letter from Gregg Cooke, Administrator, EPA Region VI to Robert Huston, Texas Commission on Environmental Quality, followed by a November 14, 2002 memorandum from Jeffrey R. Holmstead, Assistant Administrator, EPA's Office of Air and Radiation to the EPA Regional Administrators, entitled, ''Schedule for 8-Hour Ozone Designations and its Effect on Early Action Compacts.'' EPA formalized the EAC process in the designation rulemaking on April 30, 2004 (69 FR 23858). In the designation rule, EPA designated 14 EAC areas as nonattainment, but deferred the effective date of the designation until September 30, 2005. The EAC program gives local areas the flexibility to develop their own approach to meeting the 8-hour ozone standard, provided the participating communities are serious in their commitment to control emissions from local sources earlier than the CAA would otherwise require. By involving diverse stakeholders, including representatives from industry, local and State governments, and local environmental citizens' groups, a number of communities are discussing for the first time the need for regional cooperation in solving air quality problems that affect the health and welfare of its citizens. People living in these areas that achieve reductions in pollution levels sooner will enjoy the health benefits of cleaner air sooner than might otherwise occur. EPA believes this proactive approach involving multiple, diverse stakeholders is beneficial to the citizens of the area by raising awareness of the need to adopt and implement measures that will reduce emissions and improve air quality.

EPA disagrees with the comments that this action on the SIP revision for the Washington County Ozone EAC Area defers the nonattainment designation for this Area. In our May 17, 2005 NPR (70 FR 28256), EPA proposed approval of an

attainment demonstration and EAP SIP revision for the Washington County Ozone EAC Area. This SIP revision includes an attainment demonstration which demonstrates attainment of the 8-hour ozone NAAQS in the Washington County Ozone EAC Area by December 31, 2007, and also demonstrates maintenance of the 8-hour NAAQS for five years following the attainment date. As noted in the proposed action, approval of the attainment demonstration and EAP constitutes one of several milestones that an area must meet in order to participate in the EAC process. While approval of this plan is a prerequisite for an extension of the deferred effective date of the designation of this Area, *see* 40 CFR 81.300(e)(3), neither the proposed approval of this SIP revision nor this final action approving the SIP revision purports to extend the deferral of the effective date of the nonattainment designation for this Area. In a separate rulemaking (69 FR 23858, April 30, 2004), EPA deferred the effective date of the air quality designations of all 14 EAC areas to September 30, 2005. In the April 30, 2004 final rule, EPA responded to comments received during the comment period for this final rule. In a separate proposed rule (70 FR 33409, June 8, 2005), EPA proposed to extend the deferral of the effective date of the air quality designations for these 14 EAC areas. EPA will consider comments regarding its legal authority in the final rule associated with the June 8, 2005 proposed rule.

Regardless of whether EPA's separate actions deferring the effective date of the nonattainment designation for this Area are appropriate, EPA sees no basis to disapprove the attainment and maintenance plan. The provisions of the statute generally provide that areas must demonstrate attainment and maintenance of the NAAQS. *See, e.g.*, CAA section 110(a)(1) (requiring areas to submit plans providing for ''implementation, maintenance, and enforcement'' of each NAAQS) and CAA section 172(c)(1) (requiring nonattainment areas to submit plans demonstrating attainment of the NAAQS). The commenter has provided no substantive reason why this plan does not demonstrate attainment and maintenance of the 8-hour standard. Therefore, this action approving the attainment demonstration and maintenance plan is appropriate.

III. Final Action

EPA is approving the attainment demonstration and the EAP for the Washington County Ozone EAC Area. The modeling of the ozone and ozone precursor emissions from sources affecting the Washington County Ozone EAC Area demonstrates that the specified control strategies will provide for attainment of the 8-hour ozone NAAQS by December 31, 2007, and maintenance of that standard through 2012.

IV. Statutory and Executive Order Reviews

A. General Requirements

Under Executive Order 12866 (58 FR 51735, October 4, 1993), this action is not a ''significant regulatory action'' and therefore is not subject to review by the Office of Management and Budget. For this reason, this action is also not subject to Executive Order 13211, ''Actions Concerning Regulations That Significantly Affect Energy Supply, Distribution, or Use'' (66 FR 28355, May 22, 2001). This action merely approves State law as meeting Federal requirements and imposes no additional requirements beyond those imposed by State law. Accordingly, the Administrator certifies that this rule will not have a significant economic impact on a substantial number of small entities under the Regulatory Flexibility Act (5 U.S.C. 601 *et seq.*). Because this rule approves pre-existing requirements under State law and does not impose any additional enforceable duty beyond that required by State law, it does not contain any unfunded mandate or significantly or uniquely affect small governments, as described in the Unfunded Mandates Reform Act of 1995 (Pub. L. 104–4). This rule also does not have tribal implications because it will not have a substantial direct effect on one or more Indian tribes, on the relationship between the Federal Government and Indian tribes, or on the distribution of power and responsibilities between the Federal Government and Indian tribes, as specified by Executive Order 13175 (65 FR 67249, November 9, 2000). This action also does not have federalism implications because it does not have substantial direct effects on the States, on the relationship between the national government and the States, or on the distribution of power and responsibilities among the various levels of government, as specified in Executive Order 13132 (64 FR 43255, August 10, 1999). This action merely approves a State rule implementing a Federal requirement, and does not alter the relationship or the distribution of power and responsibilities established in the Clean Air Act. This rule also is not subject to Executive Order 13045 ''Protection of Children from Environmental Health Risks and Safety Risks'' (62 FR 19885, April 23, 1997), because it is not economically significant.

In reviewing SIP submissions, EPA's role is to approve State choices, provided that they meet the criteria of the Clean Air Act. In this context, in the absence of a prior existing requirement for the State to use voluntary consensus standards (VCS), EPA has no authority to disapprove a SIP submission for failure to use VCS. It would thus be inconsistent with applicable law for EPA, when it reviews a SIP submission, to use VCS in place of a SIP submission that otherwise satisfies the provisions of the Clean Air Act. Thus, the requirements of section 12(d) of the National Technology Transfer and Advancement Act of 1995 (15 U.S.C. 272 note) do not apply. This rule does not impose an information collection burden under the provisions of the Paperwork Reduction Act of 1995 (44 U.S.C. 3501 *et seq.*).

B. Submission to Congress and the Comptroller General

The Congressional Review Act, 5 U.S.C. 801 *et seq.*, as added by the Small Business Regulatory Enforcement Fairness Act of 1996, generally provides that before a rule may take effect, the agency promulgating the rule must submit a rule report, which includes a copy of the rule, to each House of the Congress and to the Comptroller General of the United States. EPA will submit a report containing this rule and other required information to the U.S. Senate, the U.S. House of Representatives, and the Comptroller General of the United States prior to publication of the rule in the **Federal Register**. This rule is not a ''major rule'' as defined by 5 U.S.C. 804(2).

C. Petitions for Judicial Review

Under section 307(b)(1) of the Clean Air Act, petitions for judicial review of this action must be filed in the United States Court of Appeals for the appropriate circuit by October 17, 2005. Filing a petition for reconsideration by the Administrator of this final rule does not affect the finality of this rule for the purposes of judicial review nor does it extend the time within which a petition for judicial review may be filed, and shall not postpone the effectiveness of such rule or action. This action, approving the attainment demonstration and the EAP for the Washington County Ozone EAC Area, may not be challenged later in proceedings to enforce its requirements. (See section 307(b)(2).)

List of Subjects in 40 CFR Part 52

Environmental protection, Air pollution control, Nitrogen dioxide, Ozone, Reporting and recordkeeping requirements, Volatile organic compounds.

Dated: August 9, 2005.

Donald S. Welsh,

Regional Administrator, Region III.

■ 40 CFR part 52 is amended as follows:

PART 52—[AMENDED]

■ 1. The authority citation for part 52 continues to read as follows:

Authority: 42 U.S.C. 7401 *et seq.*

Subpart V—Maryland

■ 2. In § 52.1070, the table in paragraph (e) is amended by adding an entry for the Attainment Demonstration and the Early Action Plan for the Washington County, Maryland Ozone Early Action Compact Area at the end of the table to read as follows:

§ 52.1070 Identification of plan.

* * * * *

(e) * * *

EPA APPROVED NONREGULATORY AND QUASI-REGULATORY MATERIAL

Name of non-regulatory SIP revision	Applicable geographic area	State submittal date	EPA approval date	Additional explanation
*	*	*	*	*
Attainment Demonstration and Early Action Plan for the Washington County Ozone Early Action Compact Area.	Washington County	12/20/04, 2/28/05	8/17/05 [Insert page number where the document begins].	

[FR Doc. 05–16291 Filed 8–16–05; 8:45 am]

BILLING CODE 6560–50–P

ENVIRONMENTAL PROTECTION AGENCY

40 CFR Part 52

[R06–OAR–2005–NM–0002; FRL–7954–5]

Approval and Promulgation of Air Quality Implementation Plans; New Mexico; San Juan County Early Action Compact Area

AGENCY: Environmental Protection Agency (EPA).

ACTION: Final rule.

SUMMARY: The EPA is approving revisions to the State Implementation Plan (SIP) submitted by the Governor of New Mexico on December 16, 2004. The revisions will incorporate the Early Action Compact (EAC) Clean Air Action Plan (CAAP) into the New Mexico SIP. EPA is approving the photochemical modeling in support of the attainment demonstration for the 8-hour ozone standard within the San Juan County EAC area. These actions strengthen the SIP in accordance with the requirements of sections 110 and 116 of the Federal Clean Air Act (the Act), and will result in emission reductions needed to help ensure continued attainment and maintenance of the 8-hour National Ambient Air Quality Standard (NAAQS) for ozone.

DATES: This final rule is effective on September 16, 2005.

ADDRESSES: EPA has established a docket for this action under Regional Material in EDocket (RME) ID No. R06–OAR–2005–NM–0002. All documents in the docket are listed in the RME index at *http://docket.epa.gov/rmepub/;* once in the system, select ''quick search,'' then type in the appropriate RME docket identification number. Although listed in the index, some information is not publicly available, *i.e.*, confidential business information or other information the disclosure of which is restricted by statute. Certain other material, such as copyrighted material, is not placed on the Internet and will be publicly available only in hard copy form. Publicly available docket materials are available either electronically in RME or in hard copy at the Air Planning Section (6PD–L), Environmental Protection Agency, 1445 Ross Avenue, Suite 700, Dallas, Texas 75202–2733. The file will be made available by appointment for public inspection in the Region 6 FOIA Review Room between the hours of 8:30 a.m. and 4:30 p.m. weekdays except for legal holidays. Contact the person listed in the **FOR FURTHER INFORMATION CONTACT** paragraph below, or Mr. Bill Deese at (214) 665–7253, to make an appointment. If possible, please make the appointment at least two working days in advance of your visit. There will be a 15 cents per page fee for making photocopies of documents. On the day of the visit, please check in at the EPA Region 6 reception area at 1445 Ross Avenue, Suite 700, Dallas, Texas.

The State submittal is also available for public inspection at the State Air Agency listed below during official business hours by appointment:

New Mexico Environment Department, Air Quality Bureau, 2048 Galisteo, Santa Fe, New Mexico 87505.

FOR FURTHER INFORMATION CONTACT: Carrie Paige, Air Planning Section (6PD–L), EPA Region 6, 1445 Ross Avenue, Dallas, Texas 75202–2733, telephone (214) 665–6521, *paige.carrie@epa.gov.*

SUPPLEMENTARY INFORMATION: Throughout this document, wherever ''we,'' ''our,'' and ''us'' is used, we mean EPA.

Outline

I. Background
II. What Action Is EPA Taking?
III. What Comments Did EPA Receive on the May 4, 2005 Proposed Rulemaking for the San Juan County EAC Area?
IV. Final Action
V. Statutory and Executive Order Reviews

I. Background

On May 4, 2005, EPA proposed approval of the San Juan County EAC area's Clean Air Action Plan (CAAP), the photochemical modeling in support of the attainment demonstration and related control measures as revisions to the SIP submitted to EPA by the State of New Mexico. The proposal provides a detailed description of these revisions and the rationale for EPA's proposed actions, together with a discussion of the opportunity to comment. The public comment period for these actions closed on June 3, 2005. See the Technical Support Document (TSD) or our proposed rulemaking at 70 FR 23075 for more information. Two comments, one of which is adverse, were received on EPA's proposed approval of the San Juan County EAC area's CAAP and 8-hour ozone attainment demonstration for the EAC area.

II. What Action Is EPA Taking?

Today we are approving revisions to the New Mexico SIP under sections 110 and 116 of the Act. The revisions demonstrate continued attainment and

maintenance of the 8-hour ozone standard within the San Juan County EAC area. The revisions include the San Juan County EAC CAAP, photochemical modeling and related control measures. The intent of the SIP revisions is to reduce ozone pollution and thereby maintain the 8-hour ozone standard.

III. What Comments Did EPA Receive on the May 4, 2005 Proposed Rulemaking for San Juan County?

We received two comment letters on the May 4, 2005 proposed rulemaking for San Juan County.

Comment: One letter indicated that EPA provided an incorrect Web site for information and reports on ozone in San Juan County. The correct internet address is *http://www.nmenv.state.nm.us/aqb/ozonetf/index.html.* Additional information can be found at *http://www.nmenv.state.nm.us/aqb/projects/ozone.html.*

Response: Our proposed rulemaking and TSD incorrectly referred to this Web site as *http://www.nmenv.state.nm.us/ozoneetf.* We appreciate the correction and will also amend the TSD to reflect the correct internet address.

Comment: One letter provided both supportive and adverse discourse, commending the State of New Mexico for steps it has taken to improve air quality. The commenter opposes approval of the SIP revision because, should the area experience a violation of the 8-hour standard, the SIP revision (1) provides for the deferment of the area's nonattainment designation to as late as December 31, 2007, and (2) relieves the area of its obligations under Title I, Part D of the Act. The commenter contends that EPA does not have the legal authority to defer the effective date of an area's nonattainment designation nor to relieve areas of the obligations of Part D of Title I of the Act when areas are violating the standard and designated nonattainment.

Response: We appreciate the support expressed towards the State of New Mexico and towards the efforts made to ensure that the citizens in the San Juan County EAC area continue to breathe clean air. We continue to believe that the EAC program, as designed, gives San Juan County the flexibility to develop their own approach to maintaining the 8-hour ozone standard and believe San Juan County is serious in their commitment to control emissions from local sources. By involving diverse stakeholders, including representatives from industry, local and State governments, and local environmental and citizen groups, San Juan County is implementing regional cooperation in solving air quality problems that affect the health and welfare of its citizens. People living in the San Juan County EAC area will realize reductions in pollution levels and enjoy the health benefits of cleaner air sooner than might otherwise occur.

In the April 2004 designation rule (69 FR 23858), the San Juan County EAC area was designated as attainment for the 8-hour ozone NAAQS. The commenter incorrectly asserts that this SIP revision provides for deferment of the designation of the area as nonattainment should the area experience a violation of the 8-hour ozone standard. Nor does EPA's approval of this SIP alter the applicability of the redesignation provision of the Act should the San Juan County EAC area experience a violation of the 8-hour ozone NAAQS in the future. Section 107(d)(3)(A) provides that EPA may redesignate an area ''on the basis of air quality data, planning and control considerations, or any other air quality-related considerations.'' Should the San Juan County EAC area experience a violation of the 8-hour ozone NAAQS in the future, EPA would consider these statutory factors in determining whether to redesignate the area to nonattainment for the 8-hour ozone NAAQS. The commenter is also incorrect that this SIP approval relieves the San Juan County EAC area of the requirements of Part D of Title I of the Act. These provisions apply to areas designated nonattainment. Because the San Juan County EAC area is designated attainment for the 8-hour ozone NAAQS, these provisions do not apply in the San Juan County EAC area.

IV. Final Action

EPA is approving the attainment demonstration, its related control measures, and the San Juan County EAC CAAP, and we are incorporating these revisions into the New Mexico SIP. We have determined that the voluntary control measures included in the attainment demonstration are surplus and are Federally enforceable once approved into the SIP. The modeling of ozone and ozone precursor emissions from sources in the San Juan County EAC area demonstrate that the area will continue to attain the 8-hour ozone NAAQS through December 31, 2007 and maintain that standard through 2012. We have reviewed the CAAP and the attainment and maintenance demonstration and determined that they are consistent with the requirements of the Act, EPA's policy, and the EAC protocol.

V. Statutory and Executive Order Reviews

Under Executive Order 12866 (58 FR 51735, October 4, 1993), this action is not a ''significant regulatory action'' and therefore is not subject to review by the Office of Management and Budget. For this reason and because this action will not have a significant, adverse effect on the supply, distribution, or use of energy, this action is also not subject to Executive Order 13211, ''Actions Concerning Regulations That Significantly Affect Energy Supply, Distribution, or Use'' (66 FR 28355, May 22, 2001). This action merely approves State law as meeting Federal requirements and imposes no additional requirements beyond those imposed by State law. Accordingly, the Administrator certifies that this rule will not have a significant economic impact on a substantial number of small entities under the Regulatory Flexibility Act (5 U.S.C. 601 *et seq.*). Because this rule approves pre-existing requirements under State law and does not impose any additional enforceable duty beyond that required by State law, it does not contain any unfunded mandate or significantly or uniquely affect small governments, as described in the Unfunded Mandates Reform Act of 1995 (Pub. L. 104–4).

This rule also does not have tribal implications because it will not have a substantial direct effect on one or more Indian tribes, on the relationship between the Federal Government and Indian tribes, or on the distribution of power and responsibilities between the Federal Government and Indian tribes, as specified by Executive Order 13175 (65 FR 67249, November 9, 2000). Although Executive Order 13175 does not apply to this rule, tribal officials, through their participation in the Four Corners Ozone Task Force, have been active in the development of this rule. This action also does not have federalism implications because it does not have substantial direct effects on the States, on the relationship between the national government and the States, or on the distribution of power and responsibilities among the various levels of government, as specified in Executive Order 13132 (64 FR 43255, August 10, 1999). This action merely approves a State rule implementing a Federal standard, and does not alter the relationship or the distribution of power and responsibilities established in the Clean Air Act. This rule also is not subject to Executive Order 13045 ''Protection of Children from Environmental Health Risks and Safety Risks'' (62 FR 19885, April 23, 1997),

because it is not economically significant.

In reviewing SIP submissions under the National Technology Transfer and Advancement Act of 1995 (15 U.S.C. 272 note), EPA's role is to approve State choices, provided that they meet the criteria of the Clean Air Act. In this context, in the absence of a prior existing requirement for the State to use voluntary consensus standards (VCS), EPA has no authority to disapprove a SIP submission for failure to use VCS. It would thus be inconsistent with applicable law for EPA, when it reviews a SIP submission, to use VCS in place of a SIP submission that otherwise satisfies the provisions of the Clean Air Act. Thus, the requirements of section 12(d) of the National Technology Transfer and Advancement Act of 1995 do not apply. This rule does not impose an information collection burden under the provisions of the Paperwork Reduction Act of 1995 (44 U.S.C. 3501 *et seq.*).

The Congressional Review Act, 5 U.S.C. section 801 *et seq.*, as added by the Small Business Regulatory Enforcement Fairness Act of 1996, generally provides that before a rule may take effect, the agency promulgating the rule must submit a rule report, which includes a copy of the rule, to each House of the Congress and to the Comptroller General of the United States. EPA will submit a report containing this rule and other required information to the U.S. Senate, the U.S. House of Representatives, and the Comptroller General of the United States prior to publication of the rule in the **Federal Register**. A major rule cannot take effect until 60 days after it is published in the **Federal Register**. This action is not a ''major rule'' as defined by 5 U.S.C. section 804(2).

Under section 307(b)(1) of the Clean Air Act, petitions for judicial review of this action must be filed in the United States Court of Appeals for the appropriate circuit by October 17, 2005. Filing a petition for reconsideration by the Administrator of this final rule does not affect the finality of this rule for the purposes of judicial review nor does it extend the time within which a petition for judicial review may be filed, and shall not postpone the effectiveness of such rule or action. This action may not be challenged later in proceedings to enforce its requirements. (See section 307(b)(2).)

List of Subjects 40 CFR Part 52

Environmental protection, Air pollution control, Intergovernmental relations, Nitrogen dioxides, Ozone, Reporting and recordkeeping requirements, Volatile organic compounds.

Dated: August 10, 2005.

Lawrence E. Starfield,

Acting Regional Administrator, Region 6.

■ 40 CFR part 52 is amended as follows:

PART 52—[AMENDED]

■ 1. The authority citation for part 52 continues to read as follows:

Authority: 42 U.S.C. 7401 *et seq.*

Subpart GG—New Mexico

■ 2. The second table in § 52.1620(e) entitled ''EPA approved nonregulatory provisions and quasi-regulatory measures in the New Mexico SIP'' is amended by adding a new entry, immediately following the last entry in the table, to read as follows:

§ 52.1620 Identification of plan.

* * * * *

(e) * * *

EPA APPROVED NONREGULATORY PROVISIONS AND QUASI-REGULATORY MEASURES IN THE NEW MEXICO SIP

Name of SIP provision	Applicable geographic or nonattainmentdate area	State submittal/effective date	EPA approval date	Explanation
*	*	*	*	*
Clean Air Action Plan and 8-hour ozone standard attainment demonstration for the San Juan County EAC area.	San Juan County	12/16/04	8/17/05 [Insert **Federal Register** page number where document begins].	.....

[FR Doc. 05–16290 Filed 8–16–05; 8:45 am]

BILLING CODE 6560–50–P

ENVIRONMENTAL PROTECTION AGENCY

40 CFR Part 52

[R03–OAR–2005–WV–0001; FRL–7954–3]

Approval and Promulgation of Air Quality Implementation Plans; West Virginia; Attainment Demonstration for the Eastern Panhandle Region Ozone Early Action Compact Area

AGENCY: Environmental Protection Agency (EPA).

ACTION: Final rule.

SUMMARY: EPA is taking final action to approve a revision to the West Virginia State Implementation Plan (SIP). This revision consists of an Early Action Compact (EAC) Plan that will enable the Eastern Panhandle Region Ozone EAC Area to demonstrate attainment and maintenance of the 8-hour ozone national ambient air quality (NAAQS) standard. This action is being taken under the Clean Air Act (CAA or Act).

DATES: This final rule is effective on September 16, 2005.

ADDRESSES: EPA has established a docket for this action under Regional Material in EDocket (RME) ID Number R03–OAR–2005–WV–0001. All documents in the docket are listed in the RME index at *http://www.docket.epa.gov/rmepub/*. Once in the system, select ''quick search,'' then key in the appropriate RME identification number. Although listed in the electronic docket, some information is not publicly available, *i.e.*, confidential business information (CBI) or other information whose disclosure is restricted by statute. Certain other material, such as copyrighted material, is not placed on the Internet and will be publicly available only in hard copy form. Publicly available docket materials are available either electronically in RME or in hard copy for public inspection during normal business hours at the Air Protection Division, U.S. Environmental Protection Agency, Region III, 1650 Arch Street, Philadelphia, Pennsylvania 19103. Copies of the State submittal are available at the West Virginia Department of Environmental Protection, Division of Air Quality, 7012

MacCorkle Avenue, SE., Charleston, West Virginia 25304–2943.

FOR FURTHER INFORMATION CONTACT: Rose Quinto, (215) 814–2182, or by e-mail at *quinto.rose@epa.gov.*

SUPPLEMENTARY INFORMATION:

I. Background

On May 17, 2005 (70 FR 28264), EPA published a notice of proposed rulemaking (NPR) for the State of West Virginia. The NPR proposed approval of the attainment demonstration and the Early Action Plan (EAP) for the West Virginia Eastern Panhandle Region EAC Area, which consists of Berkeley and Jefferson Counties. The formal SIP revision was submitted by the West Virginia Department of Environmental Protection on December 29, 2004. Other specifics of the State's SIP revision for the Eastern Panhandle Region Ozone EAC Area, and the rationale for EPA's proposed action are explained in the NPR and will not be restated here. On June 16, 2005, EPA received adverse comments on its May 17, 2005, NPR. A summary of the comments submitted and EPA's responses are provided in Section II of this document.

II. Summary of Public Comments and EPA Responses

Comment: One commenter opposes the approval of the SIP revision for the Eastern Panhandle Region Ozone EAC Area because the Area is in violation of the 8-hour ozone standard. The commenter also states that the SIP revision provides for the deferment of a nonattainment designation until a future date, potentially as late as December 31, 2007, and relieves the Area of obligations under Title I, subpart D of the CAA. Although the commenter is supportive of the goal of addressing proactively the public health concerns associated with ozone pollution, the commenter believes that EPA does not have legal authority to defer effective dates of designations or to allow areas to be relieved of obligations under Title I, part D of the CAA while they are violating the 8-hour ozone standard or are designated nonattainment of that standard.

Response: EPA first announced the EAC process in a June 19, 2002 letter from Gregg Cooke, Administrator, EPA Region VI to Robert Huston, Texas Commission on Environmental Quality, followed by a November 14, 2002 memorandum from Jeffrey R. Holmstead, Assistant Administrator, EPA's Office of Air and Radiation to the EPA Regional Administrators, entitled, ''Schedule for 8-Hour Ozone Designations and its Effect on Early Action Compacts.'' EPA formalized the EAC process in the designation rulemaking on April 30, 2004 (69 FR 23858). In the designation rule, EPA designated 14 EAC areas as nonattainment, but deferred the effective date of the designation until September 30, 2005. The EAC program gives local areas the flexibility to develop their own approach to meeting the 8-hour ozone standard, provided the participating communities are serious in their commitment to control emissions from local sources earlier than the CAA would otherwise require. By involving diverse stakeholders, including representatives from industry, local and State governments, and local environmental citizens' groups, a number of communities are discussing for the first time the need for regional cooperation in solving air quality problems that affect the health and welfare of its citizens. People living in these areas that realize reductions in pollution levels sooner will enjoy the health benefits of cleaner air sooner than might otherwise occur. EPA believes this proactive approach involving multiple, diverse stakeholders is beneficial to the citizens of the area by raising awareness of the need to adopt and implement measures that will reduce emissions and improve air quality.

EPA disagrees with the comments that this action on this SIP revision for the Eastern Panhandle Region Ozone EAC Area defers the nonattainment designation for this Area. In our May 17, 2005, NPR (70 FR 28264), EPA proposed approval of an attainment demonstration and EAP SIP revision for the Eastern Panhandle Region Ozone EAC Area. This SIP revision includes an attainment demonstration which demonstrates attainment of the 8-hour ozone NAAQS in the Eastern Panhandle Region Ozone EAC Area by December 31, 2007, and also demonstrates maintenance of the 8-hour NAAQS for five years following the attainment date. As noted in the proposed action, approval of the attainment demonstration and EAP constitutes one of several milestones that an area must meet in order to participate in the EAC process. While approval of this plan is a prerequisite for an extension of the deferred effective date of the designation of this Area, *see* 40 CFR 81.300(e)(3), neither the proposed approval of this SIP revision nor this final action approving the SIP purports to extend the deferral of the effective date of the nonattainment designation for this Area. In a separate rulemaking (69 FR 23858, April 30, 2004), EPA deferred the effective date of the air quality designations of all 14 EAC areas to September 30, 2005. In the April 30, 2004, final rule, EPA responded to comments received during the comment period for this final rule. In a separate proposed rule (70 FR 33409, June 8, 2005), EPA proposed to extend the deferral of the effective date of the air quality designations for these 14 EAC areas. EPA will consider comments regarding its legal authority in the final rule associated with the June 8, 2005, proposed rule.

Regardless of whether EPA's separate actions deferring the effective date of the nonattainment designation for this Area are appropriate, EPA sees no basis to disapprove the attainment and maintenance plan. The provisions of the statute generally provide that areas must demonstrate attainment and maintenance of the NAAQS. *See, e.g.*, CAA section 110(a)(1) (requiring areas to submit plans providing for ''implementation, maintenance, and enforcement'' of each NAAQS) and CAA section 172(c)(1) (requiring nonattainment areas to submit plans demonstrating attainment of the NAAQS). The commenter has provided no substantive reason why this plan does not demonstrate attainment and maintenance of the 8-hour standard. Therefore, this action approving the attainment demonstration and maintenance plan is appropriate.

III. Final Action

EPA is approving the attainment demonstration and the EAP for the West Virginia Eastern Panhandle Region Ozone EAC Area. The modeling of the ozone and ozone precursor emissions from sources affecting the Eastern Panhandle Region EAC Area demonstrates that the specified control strategies will provide for attainment of the 8-hour ozone NAAQS by December 31, 2007, and maintenance of that standard through 2012.

IV. Statutory and Executive Order Reviews

A. General Requirements

Under Executive Order 12866 (58 FR 51735, October 4, 1993), this action is not a ''significant regulatory action'' and therefore is not subject to review by the Office of Management and Budget. For this reason, this action is also not subject to Executive Order 13211, ''Actions Concerning Regulations That Significantly Affect Energy Supply, Distribution, or Use'' (66 FR 28355, May 22, 2001). This action merely approves State law as meeting Federal requirements and imposes no additional

requirements beyond those imposed by State law. Accordingly, the Administrator certifies that this rule will not have a significant economic impact on a substantial number of small entities under the Regulatory Flexibility Act (5 U.S.C. 601 *et seq.*). Because this rule approves pre-existing requirements under State law and does not impose any additional enforceable duty beyond that required by State law, it does not contain any unfunded mandate or significantly or uniquely affect small governments, as described in the Unfunded Mandates Reform Act of 1995 (Pub. L. 104–4). This rule also does not have tribal implications because it will not have a substantial direct effect on one or more Indian tribes, on the relationship between the Federal Government and Indian tribes, or on the distribution of power and responsibilities between the Federal Government and Indian tribes, as specified by Executive Order 13175 (65 FR 67249, November 9, 2000). This action also does not have federalism implications because it does not have substantial direct effects on the States, on the relationship between the national government and the States, or on the distribution of power and responsibilities among the various levels of government, as specified in Executive Order 13132 (64 FR 43255, August 10, 1999). This action merely approves a State rule implementing a Federal standard, and does not alter the relationship or the distribution of power and responsibilities established in the Clean Air Act. This rule also is not subject to Executive Order 13045 ''Protection of Children from Environmental Health Risks and Safety Risks'' (62 FR 19885, April 23, 1997), because it is not economically significant.

In reviewing SIP submissions, EPA's role is to approve State choices, provided that they meet the criteria of the Clean Air Act. In this context, in the absence of a prior existing requirement for the State to use voluntary consensus standards (VCS), EPA has no authority to disapprove a SIP submission for failure to use VCS. It would thus be inconsistent with applicable law for EPA, when it reviews a SIP submission, to use VCS in place of a SIP submission that otherwise satisfies the provisions of the Clean Air Act. Thus, the requirements of section 12(d) of the National Technology Transfer and Advancement Act of 1995 (15 U.S.C. 272 note) do not apply. This rule does not impose an information collection burden under the provisions of the Paperwork Reduction Act of 1995 (44 U.S.C. 3501 *et seq.*).

B. Submission to Congress and the Comptroller General

The Congressional Review Act, 5 U.S.C. 801 *et seq.*, as added by the Small Business Regulatory Enforcement Fairness Act of 1996, generally provides that before a rule may take effect, the agency promulgating the rule must submit a rule report, which includes a copy of the rule, to each House of the Congress and to the Comptroller General of the United States. EPA will submit a report containing this rule and other required information to the U.S. Senate, the U.S. House of Representatives, and the Comptroller General of the United States prior to publication of the rule in the **Federal Register**. This rule is not a ''major rule'' as defined by 5 U.S.C. 804(2).

C. Petitions for Judicial Review

Under section 307(b)(1) of the Clean Air Act, petitions for judicial review of this action must be filed in the United States Court of Appeals for the appropriate circuit by October 17, 2005. Filing a petition for reconsideration by the Administrator of this final rule does not affect the finality of this rule for the purposes of judicial review nor does it extend the time within which a petition for judicial review may be filed, and shall not postpone the effectiveness of such rule or action. This action, approving the attainment demonstration and the EAP for the Eastern Panhandle Region Ozone EAC Area, may not be challenged later in proceedings to enforce its requirements. (See section 307(b)(2).)

List of Subjects in 40 CFR Part 52

Environmental protection, Air pollution control, Nitrogen dioxide, Ozone, Reporting and recordkeeping requirements, Volatile organic compounds.

Dated: August 9, 2005.

Donald S. Welsh,

Regional Administrator, Region III.

■ 40 CFR part 52 is amended as follows:

PART 52—[AMENDED]

■ 1. The authority citation for 40 CFR part 52 continues to read as follows:

Authority: 42 U.S.C. 7401 *et seq.*

Subpart XX—West Virginia

■ 2. In § 52.2520, the table in paragraph (e) is revised by adding the entry for the Attainment Demonstration and Early Action Plan for the Eastern Panhandle Region Ozone Early Action Compact Area at the end of the table to read as follows:

§ 52.2520 Identification of plan.

* * * * *

(e) * * *

EPA-APPROVED NONREGULATORY AND QUASI-REGULATORY MATERIAL

Name of nonregulatory SIP revision	Applicable geographic area	State submittal date	EPA approval date	Additional explanation
* *	* *	*	*	*
Attainment Demonstration and Early Action Plan for the Eastern Panhandle Region Ozone Early Action Compact Area.	Berkeley and Jefferson Counties	12/29/04	8/17/05 [Insert **Federal Register** page number where the document begins].	

[FR Doc. 05–16292 Filed 8–16–05; 8:45 am]
BILLING CODE 6560–50–P

FEDERAL COMMUNICATIONS COMMISSION

47 CFR Part 51

[CC Docket Nos. 96–98, 96–115, 99–273; FCC 05–93]

Requirements for Nondiscriminatory Access to Directory Assistance

AGENCY: Federal Communications Commission.

ACTION: Clarification.

SUMMARY: This document denies BellSouth Corporation (BellSouth) and SBC Communications Inc.'s (SBC) joint request that the Federal Communications Commission (Commission) reconsider the Commission's conclusion that local exchange carriers (LECs) may not impose specific contractual restrictions on competing directory assistance (DA) providers' use of DA data obtained pursuant to section 251(b)(3) of the Communications Act of 1934, as amended. The Order on Reconsideration (Order) clarifies that competing DA providers may not, however, use data obtained pursuant to this section for purposes not permitted by the Act, the Commission's rules, or state regulations. The Order also denies petitioners' joint request that the Commission reconsider its conclusion that LECs are required to provide nondiscriminatory access to local DA data acquired from third parties. Finally, the Order denies SBC's petition for reconsideration of the Commission's determination that competing providers are entitled to nondiscriminatory access to operator services (OS), DA and features adjunct to these services.

DATES: Effective September 16, 2005.

FOR FURTHER INFORMATION CONTACT: Rodney McDonald, Attorney, Competition Policy Division, Wireline Competition Bureau, (202) 418–7513, or William Dever, Deputy Chief, Competition Policy Division, Wireline Competition Bureau, (202) 418–1578.

SUPPLEMENTARY INFORMATION: This is a summary of the Commission's Order on Reconsideration (Order) in CC Docket Nos. 96–98, 96–115, 99–273, FCC 05–93, adopted April 29, 2005, and released May 3, 2005. The complete text of this document is available for inspection and copying during normal business hours in the FCC Reference Information Center, Portals II, 445 12th Street, SW., Room CY–A257, Washington, DC, 20554. This document may also be purchased from the Commission's duplicating contractor, Best Copy and Printing, Inc., 445 12th Street, SW., Room CY–B402, Washington, DC 20554, telephone (202) 488–5300, facsimile (202) 488–5563, or via e-mail at *FCC@BCPIWEB.COM.* It is also available on the Commission's Web site at *http://www.fcc.gov.*

Synopsis of the Order on Reconsideration (Order)

Background

1. Section 251(b)(3) of the Act imposes on LECs the ''duty to permit all [competing] providers [of telephone exchange service and telephone toll service] to have nondiscriminatory access to * * * directory assistance.'' In the *Local Competition Second Report and Order* (61 FR 47284–01, September 6, 1996), the Commission concluded that section 251(b)(3) requires LECs to provide such competing providers with access to DA equal to that which the LECs provide to themselves, and that LECs treat all such competitors equally.

2. The Commission affirmed this conclusion in the subsequent *SLI/DA Order on Reconsideration and Notice* (64 FR 51910–01, September 27, 1999) and determined that nondiscriminatory access under section 251(b)(3) of the Act requires that all LECs provide competing providers of telephone exchange service and toll service with nondiscriminatory access to the LECs' directory assistance databases. The Commission further acknowledged that ''requesting carriers would not have nondiscriminatory access to operator services and directory assistance under section 251(b)(3) unless those carriers have access to adjunct features such as rating tables and customer information databases.'' SBC filed a petition for clarification or reconsideration of some of the Commission's conclusions in the *SLI/DA Order on Reconsideration and Notice* (64 FR 51910–01, September 27, 1999).

3. In the *SLI/DA First Report and Order* (66 FR 10965–02, February 21, 2001), the Commission explained that section 251(b)(3) provides competing DA providers with the same rights and obligations regarding DA data as it does to the providing LECs and concluded that ''section 251(b)(3)'s requirement of nondiscriminatory access to a LEC's DA database thus does not contemplate continuing veto power by the providing LEC over the uses to which DA information is put.'' SBC and BellSouth filed a joint petition for reconsideration and/or clarification of certain conclusions made by the Commission in the *SLI/DA First Report and Order* (66 FR 10965–02, February 21, 2001).

Discussion

4. In this Order, we address a joint petition for reconsideration filed by SBC and BellSouth, and a separate petition for reconsideration filed by SBC. We further clarify conclusions made in the *SLI/DA First Report and Order* (66 FR 10965–02, February 21, 2001) and *SLI/DA Order on Reconsideration and Notice* (64 FR 51910–01, September 27, 1999). SBC/BellSouth request that the Commission reconsider its decision and restrict the purposes for which competing DA providers may use DA information, or alternatively establish that LECs may contractually impose their own restrictions. In particular, SBC/BellSouth argue that restrictions should include limits on resale and a prohibition on use for purposes other than DA and DA-like services, such as sales solicitation and telemarketing.

5. *Contractual Restrictions on the Use of DA Information.* We deny SBC/BellSouth's petition for reconsideration of our determination regarding the scope of competing DA providers' access to DA databases. As we have previously noted, ''[s]ection 251(b)(3) does not, by its terms, limit the use of directory assistance data solely to the provision of directory assistance.'' As we have previously concluded, ''nondiscriminatory access'' under section 251(b)(3) means that providing LECs must offer access equal to that which they provide themselves. We recognize that further restrictions on resale and other such use also might substantially increase the costs of providing competitive DA services, thereby reducing the benefits to consumers of competitive DA providers in the market.

6. We also agree with commenters that argue that the Commission should not provide LECs with the authority to impose their own restrictions on the purposes for which competing DA providers may use DA information. We find that the imposition of such contractual restrictions by the providing LEC is inconsistent with the nondiscriminatory access requirements of section 251(b)(3).

7. We clarify, however, that no language in the *SLI/DA First Report and Order* (66 FR 10965–02, February 21, 2001) was ever intended to grant competing DA providers greater latitude in their use of DA data than that permitted to providing LECs, or to permit competing DA providers to use that data in a manner inconsistent with Federal or state law or regulation. We again note that all qualified DA

providers, both providing LECs and competing DA providers, are subject to state limitations regarding use of accessed directory information (*e.g.*, by prohibiting the sale of customer information to telemarketers), as long as those state regulations are consistent with the nondiscrimination requirements of section 251(b)(3) of the Act.

8. We also note that section 51.217(c)(3) of the Commission's rules already balances the Commission's interests in ensuring nondiscriminatory access to DA, and in protecting customer privacy. The section indicates that even though a LEC shall not provide access to the unlisted number of its customers, it must ''ensure that access is permitted to the same directory information, including customer name and address, that is available to its own directory assistance customers.'' We clarify, however, that although competing DA providers may be entitled to nondiscriminatory access to DA information, all competing DA providers must adhere to the disclosed privacy requests of LEC customers for all DA information obtained pursuant to section 251(b)(3). This means that, to the extent competing DA providers have received notice of a LEC customer's privacy requests, they must comply with such requests, and may not use or disclose any DA information that a LEC's customer has requested that the LEC not use or make available.

9. We grant SBC/BellSouth's request insofar as they ask the Commission to agree that there is no statutory basis for allowing DA providers to use DA listings obtained pursuant to section 251(b)(3) of the Act for directory publishing. SBC/BellSouth submit that permitting such use would allow competing DA providers to avoid the statutory distinctions between directory assistance and directory publishing indicated by the separate treatment of these services under section 251(b)(3) and section 222(e) of the Act. We agree, and note that in the *SLI/DA First Report and Order* (66 FR 10965–02, February 21, 2001), the Commission found that although the underlying databases for the two services are similar, they are not identical, and any seeming convergence between DA and directory publishing is not strong enough at this time to obviate the distinctions drawn by Congress in the Act.

10. *Nondiscriminatory Access to Local DA Listings Acquired from Third Parties.* We are not persuaded by SBC/BellSouth's assertion that in instances where more than one facilities-based LEC serves a local area, LECs should not be required to provide nondiscriminatory access to local DA listings purchased from third parties. Rather, we agree that competitive DA providers are entitled to receive nondiscriminatory access to a LEC's entire local DA database pursuant to section 251(b)(3) of the Act. We reaffirm that even though the Commission has declined to require LECs to provide nondiscriminatory access to *nonlocal* DA data, it has consistently required that LECs provide nondiscriminatory access to all of their *local* DA database listings.

11. *Nondiscriminatory Access to Operator Services, Directory Assistance and Features Adjunct to These Services.* Finally, we deny SBC's separate petition for reconsideration of the Commission's determination regarding the scope of competing DA providers' access to operator services (OS), DA and the features adjunct to these services. SBC specifically requests that the Commission find that section 251(b)(3) does not require that LECs provide ''unbundled'' access to all of the facilities used to provide OS/DA services, including adjunct features and software.

12. We acknowledge that carriers are no longer required to provide OS/DA services as unbundled network elements (UNEs) under section 251(c)(3). We note, however, that in coming to the conclusion that UNE access would no longer be necessary under that section, the Commission specifically recognized the continued obligation to provide nondiscriminatory access to OS/DA under section 251(b)(3). We reaffirm the Commission's determination that requesting carriers would not have nondiscriminatory access to operator services and directory assistance under section 251(b)(3) unless those carriers have access to these services in their entirety, including access to any adjunct features such as rating tables and customer information databases necessary to allow competing providers full use of these services.

Ordering Clauses

13. Accordingly, *it is ordered* that, pursuant to the authority contained in sections 1, 4, 201, 222, and 251 of the Communications Act of 1934, as amended, 47 U.S.C. 151, 154, 201, 222, and 251, this Order on Reconsideration *is adopted.*

14. *It is further ordered* that Qwest Corporation's Request to Withdraw its Pending Petition for Reconsideration *is granted.*

15. *It is further ordered* that the above mentioned Petition for Clarification or, in the Alternative, Reconsideration filed by SBC/BellSouth *is granted in part and denied in part,* to the extent discussed herein.

16. *It is further ordered* that SBC Communications Inc.''s Request to Withdraw Issue in Its Pending Petition for Reconsideration *is granted.*

17. *It is further ordered* that the Petition for Clarification or, in the Alternative, Reconsideration filed by SBC *is denied,* to the extent discussed herein.

Federal Communications Commission.

Marlene H. Dortch,

Secretary.

[FR Doc. 05–16334 Filed 8–16–05; 8:45 am]

BILLING CODE 6712–01–P

FEDERAL COMMUNICATIONS COMMISSION

47 CFR Part 73

[DA 05–2199; MB Docket No. 05–81; RM–11102]

Radio Broadcasting Services; Altheimer, AR and Little Rock, AR

AGENCY: Federal Communications Commission.

ACTION: Final rule.

SUMMARY: At the request of Charles Crawford, Channel 251C3 is allotted at Altheimer, Arkansas, as the community's first local aural transmission service. Station KURB(FM), Channel 253C, Little Rock, Arkansas is reclassified as 253C0 pursuant to the reclassification procedures adopted by the Commission. *See* Second Report and Order in MM Docket 98–93 (1998 Biennial Regulatory Review—Streamlining of Radio Technical Rules in Parts 73 and 74 of the Commission's Rules) 65 FR 79773 (2000). An Order to Show Cause was issued to Citadel Broadcasting Company, licensee of Station KURB(FM) (RM–11102). Channel 251C3 is allotted at Altheimer, Arkansas, at Petitioner's requested site 20.4 kilometers (12.7 miles) southwest of the community at coordinates 34–09–00 NL and 91–56–00 WL.

DATES: Effective September 12, 2005.

ADDRESSES: Federal Communications Commission, 445 Twelfth Street, SW., Washington, DC 20554.

FOR FURTHER INFORMATION CONTACT: Victoria McCauley, Media Bureau, (202) 418–2180.

SUPPLEMENTARY INFORMATION: This is a synopsis of the Commission's *Report and Order,* MB Docket No. 05–81, adopted July 27, 2005, and released July 29, 2005. The full text of this Commission decision is available for

inspection and copying during normal business hours in the FCC's Reference Information Center at Portals II, CY–A257, 445 Twelfth Street, SW., Washington, DC. This document may also be purchased from the Commission's duplicating contractors, Qualex International, Portals II, 445 12th Street, SW., Room CY–B402, Washington, DC 20554, telephone 202–863–2893, or via e-mail *qualexint@aol.com.* The Commission will send a copy of this *Report and Order* in a report to be sent to Congress and the Government Accountability Office pursuant to the Congressional Review Act, *see* 5 U.S.C. 801(a)(1)(A).

List of Subjects in 47 CFR Part 73

Radio, Radio broadcasting.

■ 47 CFR part 73 is amended as follows:

PART 73—RADIO BROADCAST SERVICES

■ 1. The authority citation for Part 73 continues to read as follows:

Authority: 47 U.S.C. 154, 303, 334 and 336.

§ 73.202 [Amended]

■ 2. Section 73.202(b), the Table of FM Allotments under Arkansas is amended by adding Altheimer, Channel 251C3, and by removing Channel 253C and adding Channel 253C0 at Little Rock.

Federal Communications Commission.

John A. Karousos,

Assistant Chief, Audio Division, Media Bureau.

[FR Doc. 05–16076 Filed 8–16–05; 8:45 am]

BILLING CODE 6712–01–P

FEDERAL COMMUNICATIONS COMMISSION

47 CFR Part 73

[DA 05–2200; MB Docket No. 02–109; RM–10420, 10546]

Radio Broadcasting Services; Morgan, GA

AGENCY: Federal Communications Commission.

ACTION: Final rule.

SUMMARY: The Audio Division, at the request of Donald F. White and Jerry E. White d/b/a Morgan Radio Company, allots Channel 228A at Morgan, Georgia, as the community's first local aural transmission service (RM–10420). *See* 67 FR 39933, June 11, 2002. We also dismiss the counterproposal filed by Clyde Scott, Jr. d/b/a EME Communications, proposing the allotment of Channel 228C3 in lieu of Channel 228A at Morgan, Georgia (RM–10546). The allotment of Channel 228C3 at Morgan was not considered because EME Communications failed to express an interest in applying for the channel, if allotted. Channel 228A can be allotted to Morgan in compliance with the Commission's minimum distance separation requirements at city reference coordinates. The coordinates for Channel 228A are 31–32–15 North Latitude and 84–35–58 West Longitude.

DATES: Effective September 12, 2005. A filing window for Channel 228A at Morgan, Georgia, will not be opened at this time. Instead, the issue of opening this allotment for auction will be addressed by the commission a subsequent order.

FOR FURTHER INFORMATION CONTACT: Sharon P. McDonald, Media Bureau, (202) 418–2180.

SUPPLEMENTARY INFORMATION: This is a synopsis of the Commission's *Report and Order,* MB Docket No. 02–109, adopted July 27, 2005, and released July 29, 2005. The full text of this Commission decision is available for inspection and copying during normal business hours in the FCC Information Center, Portals II, 445 12th Street, SW., Room CY–A257, Washington, DC 20554. The complete text of this decision also may be purchased from the Commission's duplicating contractor, Best Copy and Printing, Inc., 445 12th Street, SW., Room CY–B402, Washington, DC, 20554, (800) 378–3160, or via the company's Web site, *http://www.bcpiweb.com.* The Commission will send a copy of this *Report and Order* in a report to be sent to Congress and the Government Accountability Office pursuant to the Congressional Review Act, *see* U.S.C. 801(a)(1)(A).

List of Subjects in 47 CFR Part 73

Radio, Radio broadcasting.

■ Part 73 of title 47 of the Code of Federal Regulations is amended as follows:

PART 73—RADIO BROADCAST SERVICES

■ 1. The authority citation for Part 73 continues to read as follows:

Authority: 47 U.S.C. 154, 303, 334 and 336.

§ 73.202 [Amended]

■ 2. Section 73.202(b), the Table of FM Allotments under Georgia, is amended by adding Morgan, Channel 228A.

Federal Communications Commission.

John A. Karousos,

Assistant Chief, Audio Division, Media Bureau.

[FR Doc. 05–16075 Filed 8–16–05; 8:45 am]

BILLING CODE 6712–01–P

FEDERAL COMMUNICATIONS COMMISSION

47 CFR Part 73

[DA 05–2210; MB Docket No. 05–137, RM–11161]

Radio Broadcasting Service; Big Spring, TX

AGENCY: Federal Communications Commission.

ACTION: Final rule.

SUMMARY: The Audio Division, at the request of Charles Crawford allots Channel 265C3 at Big Spring, Texas, as the community's third local commercial FM service. *See* 70 FR 19397, published April 13, 2005. Channel 265C3 can be allotted to Big Spring in compliance with the Commission's minimum distance separation requirements at the center of the community. The reference coordinates for Channel 265C3 at Big Spring are 32–12–00 North Latitude and 101–18–00 West Longitude with a site restriction of 17.7 kilometers (11 miles) east of Big Spring. Mexican concurrence has been requested. A filing window for Channel 265C3 at Big Spring, Texas will not be opened at this time. Instead, the issue of opening a filing window for this channel will be addressed by the Commission in a subsequent order.

DATES: Effective September 12, 2005.

ADDRESSES: Federal Communications Commission, 445 Twelfth Street, SW., Washington, DC 20554.

FOR FURTHER INFORMATION CONTACT: Helen McLean, Media Bureau, (202) 418–2738.

SUPPLEMENTARY INFORMATION: This is a synopsis of the Commission's *Report and Order*, MB Docket No. 05–137, adopted July 27, 2005, and released July 29, 2005. The full text of this Commission decision is available for inspection and copying during regular business hours at the FCC's Reference Information Center, Portals II, 445 Twelfth Street, SW., Room CY–A257, Washington, DC 20554. The complete text of this decision may also be purchased from the Commission's duplicating contractor, Best Copy and Printing, Inc., 445 12th Street, SW., Room CY–B402, Washington, DC 20554, telephone 1–800–378–3160 or *http://www.BCPIWEB.com.* The Commission will send a copy of this *Report and Order* in a report to be sent to Congress and the Government Accountability Office pursuant to the Congressional Review Act, *see* 5 U.S.C. 801(a)(1)(A).

List of Subjects in 47 CFR Part 73

Radio, Radio broadcasting.

Part 73 of title 47 of the Code of Federal Regulations is amended as follows:

PART 73—RADIO BROADCAST SERVICES

■ 1. The authority citation for part 73 continues to read as follows:

Authority: 47 U.S.C. 154, 303, 334 and 336.

§ 73.202 [Amended]

■ 2. Section 73.202(b), the Table of FM Allotments under Texas, is amended by adding Channel 265C3 at Big Spring.

Federal Communications Commission.

John A. Karousos,

Assistant Chief, Audio Division, Media Bureau.

[FR Doc. 05–16073 Filed 8–16–05; 8:45 am]

BILLING CODE 6712–01–P

FEDERAL COMMUNICATIONS COMMISSION

47 CFR Part 73

[DA 05–2211;MB Docket No. 02–294; RM–10543, RM–10774]

Radio Broadcasting Services; Brigham City, UT, Fountain Green, UT, Opal and Reliance WY; and Price and Woodruff, UT

AGENCY: Federal Communications Commission.

ACTION: Final rule.

SUMMARY: The Audio Division, at the request of Simmons-SLC, LS, LLC, reallots Channel 264C from Brigham City to Woodruff, Utah, and modifies Station KEGH(FM)'s license accordingly (RM–10774). To accommodate the reallotment, we will (1) substitute Channel 254C3 for vacant Channel 265C3 at Reliance, Wyoming; (2) substitute Channel 261A for Channel 265C2 at Price, Utah, and modify Station KWSA(FM)'s reference coordinates and license accordingly; and (3) modify the reference coordinates for vacant Channel 260A at Fountain Green, Utah. At the request of Black Diamond Broadcasting, we also dismiss the petition for rule making proposing the allotment of Channel 263A at Opal, Wyoming (RM–10543). *See* 67 FR 63874, October 16, 2002. *See* Supplementary Information, *infra*.

DATES: Effective September 12, 2005.

FOR FURTHER INFORMATION CONTACT: Sharon P. McDonald, Media Bureau, (202) 418–2180.

SUPPLEMENTARY INFORMATION: This is a synopsis of the Commission's *Report and Order*, MB Docket No. 02–294, adopted July 27, 2005, and released July 29, 2005. The full text of this Commission decision is available for inspection and copying during normal business hours in the FCC Information Center, Portals II, 445 12th Street, SW., Room CY–A257, Washington, DC 20554. The complete text of this decision also may be purchased from the Commission's duplicating contractor, Best Copy and Printing, Inc., 445 12th Street, SW., Room CY–B402, Washington, DC 20554, (800) 378–3160, or via the company's Web site, *http://www.bcpiweb.com*. The Commission will send a copy of this *Report and Order* in a report to be sent to Congress and the Government Accountability Office pursuant to the Congressional Review Act, *see* U.S.C. 801(a)(1)(A).

Channel 264C can be reallotted to Woodruff in compliance with the Commission's minimum distance separation requirements with a site restriction of 65.8 kilometers (40.9 miles) south at petitioner's requested site. The coordinates for Channel 264C at Woodruff are 40–56–13 North Latitude and 111–00–35 West Longitude. To accommodate the reallotment, Channel 254C3 can be substituted for vacant Channel 265C3 at Reliance at its presently authorized site. The coordinates for Channel 254C3 are 41–40–09 North Latitude and 109–11–47 West Longitude. Channel 261A can be allotted to Price with a site restriction of 6.0 kilometers (3.7 miles) south at petitioner's requested site. The coordinates for Channel 261A at Price are 39–32–42 North Latitude and 110–48–56 West Longitude. The reference coordinates can be modified for vacant Channel 260A at Fountain Green without the imposition of a site restriction. The modified reference coordinates for Channel 260A at Fountain Green are 39–37–42 North Latitude 111–38–28 West Longitude.

The FM Table of Allotments lists Channel 265A at Price, Utah in lieu of Channel 265C2 at Price, Utah. On October 24, 2002, Station KWSA was granted a construction permit to specify operation on Channel 265C2 at Price, Utah. *See* BMPH–20020726ABU.

List of Subjects in 47 CFR Part 73

Radio, Radio broadcasting.

■ Part 73 of title 47 of the Code of Federal Regulations is amended as follows:

PART 73—RADIO BROADCAST SERVICES

■ 1. The authority citation for Part 73 continues to read as follows:

Authority: 47 U.S.C. 154, 303, 334 and 336.

§ 73.202 [Amended]

■ 2. Section 73.202(b), the Table of FM Allotments under Utah, is amended by removing Channel 264C at Brigham City, by removing Channel 265A and adding Channel 261A at Price and by adding Woodruff, Channel 264C.

■ 3. Section 73.202(b), the Table of FM Allotments under Wyoming, is amended by removing Channel 265C3 and adding Channel 254C3 at Reliance.

Federal Communications Commission.

John A. Karousos,

Assistant Chief, Audio Division, Media Bureau.

[FR Doc. 05–16072 Filed 8–16–05; 8:45 am]

BILLING CODE 6712–01–P

FEDERAL COMMUNICATIONS COMMISSION

47 CFR Part 73

[DA 05–2217; MB Docket No. 04–19; RM–10845]

Radio Broadcasting Services; Munford and Talladega, AL

AGENCY: Federal Communications Commission.

ACTION: Final rule.

SUMMARY: In response to a *Notice of Proposed Rule Making*, 69 FR 8357 (February 24, 2004), this *Report and Order* reallots Channel 224A, Station WTDR(FM) (''WTDR''), Talladega, Alabama, to Munford, Alabama, and modifies Station WTDR's license accordingly. The coordinates for Channel 224A at Munford, Alabama, are 33–29–12 NL and 85–59–15, with a site restriction of 5.9 kilometers (3.6 miles) southwest of Munford.

DATES: Effective September 12 , 2005.

FOR FURTHER INFORMATION CONTACT: R. Barthen Gorman, Media Bureau, (202) 418–2180.

SUPPLEMENTARY INFORMATION: This is a synopsis of the Commission's *Report and Order*, MB Docket No. 04–19, adopted July 27, 2005, and released July 29, 2005. The full text of this Commission decision is available for inspection and copying during normal business hours in the FCC's Reference Information Center at Portals II, 445 12th Street, SW., Room CY–A257, Washington, DC 20554. The document may also be purchased from the Commission's duplicating contractor, Best Copy and Printing, Inc., Portals II, 445 12th Street, SW., Room CY–B402, Washington, DC 20554, telephone 1–800–378–3160 or *http://www.BCPIWEB.com*. The Commission will send a copy of this *Report and*

Order in a report to be sent to Congress and the Government Accountability Office pursuant to the Congressional Review Act, *see* 5 U.S.C. 801(a) (1) (A).

List of Subjects in 47 CFR Part 73

Radio, Radio broadcasting.

■ Part 73 of Title 47 of the Code of Federal Regulations is amended as follows:

PART 73—RADIO BROADCAST SERVICES

■ 1. The authority citation for Part 73 reads as follows:

Authority: 47 U.S.C. 154, 303, 334 and 336.

§ 73.202 [Amended]

■ 2. Section 73.202(b), the Table of FM Allotments under Alabama, is amended by adding Munford, Channel 224A and removing Channel 224A at Talladega.

Federal Communications Commission.

John A. Karousos,

Assistant Chief, Audio Division, Media Bureau.

[FR Doc. 05–16067 Filed 8–16–05; 8:45 am]

BILLING CODE 6712–01–P

FEDERAL COMMUNICATIONS COMMISSION

47 CFR Part 73

[DA 05–2207; MB Docket No. 04–411; RM–11096]

Radio Broadcasting Services; Georgetown, Mason, and Oxford, OH, Salt Lick, KY and West Union, OH

AGENCY: Federal Communications Commission.

ACTION: Final rule.

SUMMARY: This document grants a petition filed by Balogh Broadcasting Company, Inc., licensee of Station WOXY(FM), Channel 249A, Oxford, Ohio, Richard L. Plessinger, Sr., licensee of Station WAXZ(FM), Channel 249A, Georgetown, Ohio, and Dreamcatcher Communications, Inc., licensee of Station WRAC(FM), Channel 276A, West Union, Ohio requesting the reallotment of Channel 249A from Oxford to Mason, Ohio, as its first local service and modification of the Station WOXY(FM) license; reallotment of Channel 249A from Georgetown, Ohio to Salt Lick, Kentucky, as its first local service and modification of the Station WAXZ(FM) license; and reallotment of Channel 276A from West Union to Georgetown, Ohio to prevent removal of sole existing local service and modification of the Station WRAC(FM) license. *See* 69 FR 67882, published November 22, 2004. *See* **SUPPLEMENTARY INFORMATION**, *supra.*

DATES: Effective September 12, 2005.

ADDRESSES: Federal Communications Commission, 445 Twelfth Street, SW., Washington, DC 20554.

FOR FURTHER INFORMATION CONTACT: Rolanda F. Smith, Media Bureau, (202) 418–2180.

SUPPLEMENTARY INFORMATION: This is a summary of the Commission's *Report and Order*, MB Docket No. 04–411, adopted July 27, 2005, and released July 29, 2005. The full text of this Commission decision is available for inspection and copying during normal business hours in the Commission's Reference Center, 445 Twelfth Street, SW., Washington, DC 20554. The complete text of this decision may also be purchased from the Commission's duplicating contractor, Best Copy and Printing, Inc., 445 12th Street, SW., Room CY–B402, Washington, DC, 20054, telephone 1–800–378–3160 or *http://www.BCPIWEB.com.* The Commission will send a copy of this *Report and Order* in a report to be sent to Congress and the Government Accountability Office pursuant to the Congressional Review Act, *see* 5 U.S.C. 801(a)(1)(A).

Channel 249A can be allotted to Mason in compliance with the Commission's minimum distance separation requirements with a site restriction of 9.4 kilometers (5.8 miles) east of Mason at reference coordinates 39–20–57 NL and 84–12–08 WL. Channel 249A can also be allotted to Salt Lick in compliance with the Commission's minimum distance separation requirements with a site restriction of 6.6 kilometers (4.1 miles) northeast of Salt Lick at reference coordinates 38–10–15 NL and 83–34–31 WL. Channel 276A can also be allotted to Georgetown in compliance with the Commission's minimum distance separation requirements with a site restriction of 12.1 kilometers (7.5 miles) east at reference coordinates 38–52–14 NL and 83–45–55 WL. On May 17, 2004, First Broadcasting Capital Partners, LLC became the licensee of Stations WOXY(FM) and WAXZ(FM) pursuant to assignment of license applications. See File Nos. BALH–20040126AMT and BALH–20040127ADR.

This document also dismissed a counterproposal filed Gateway Radio Works, Inc., licensee of Station WIVY(FM), Channel 242A, Morehead, Kentucky, requesting the allotment of Channel 249A at Livingston, Kentucky, as its first local service. To accommodate this proposed allotment, the counterproposal also requested the reclassification of Station WJXB–FM, Channel 248C, Knoxville, Tennessee as a C0 facility because the station operates below minimum Class C facilities; and the reallotment of Channel 242A from Morehead to Salt Lick, Kentucky, as its first local service and the modification of the Station WIVY(FM) license to specify Salt Lick as its community of license.

List of Subjects in 47 CFR Part 73

Radio, Radio broadcasting.

■ Part 73 of title 47 of the Code of Federal Regulations is amended as follows:

PART 73—RADIO BROADCAST SERVICES

■ 1. The authority citation for part 73 continues to read as follows:

Authority: 47 U.S.C. 154, 303, 334 and 336.

§ 73.202 [Amended]

■ 2. Section 73.202(b), the Table of FM Allotments under Kentucky, is amended by adding Salt Lick, Channel 249A.

■ 3. Section 73.202(b), the Table of FM Allotments under Ohio, is amended by removing Channel 249A and by adding Channel 276A at Georgetown, by adding Mason, Channel 249A, by removing Oxford, Channel 249A, and by removing West Union, Channel 276A.

Federal Communications Commission.

John A. Karousos,

Assistant Chief, Audio Division, Media Bureau.

[FR Doc. 05–16063 Filed 8–16–05; 8:45 am]

BILLING CODE 6712–01–P

FEDERAL COMMUNICATIONS COMMISSION

47 CFR Part 73

[MM Docket No. 00–167; FCC 04–221]

Children's Television Obligation of Digital Television Broadcasters

AGENCY: Federal Communications Commission.

ACTION: Final rule; announcement of effective date.

SUMMARY: The Federal Communications Commission has received Office of Management and Budget (OMB) approval for the revised public information collection, OMB Control Number 3060–0750, Children's Television Obligation of Digital Television Broadcasters, MB Docket No. 00–167, FCC 04–221. FCC 04–221 was published at 70 FR 25 (January 3, 2005), correction published at 70 FR 9876 (March 1, 2005). Therefore, the Commission announces that 47 CFR

73.671(c)(5) is effective September 19, 2005.

DATES: The amendment to 47 CFR 73.671(c)(5) published at 70 FR 25, January 3, 2005, and corrected at 70 FR 9876, March 1, 2005, is effective on September 19, 2005.

SUPPLEMENTARY INFORMATION: The Federal Communications Commission has received OMB approval for revised information collection, OMB Control Number 3060–0750, Children's Television Obligation of Digital Television Broadcasters, MB Docket No. 00–167; FCC 04–221. This rule was published at 70 FR 25 (January 3, 2005), correction published at 70 FR 9876 (March 1, 2005). Through this document, the Commission announces that OMB approval for OMB Control Number 3060–0750 was received on July 27, 2005. The effective date for rule 47 CFR 73.671(c)(5) is September 19, 2005.

Pursuant to the Paperwork Reduction Act of 1995, Public Law 104–13, an agency may not conduct or sponsor a collection of information unless it displays a currently valid control number. Notwithstanding any other provisions of law, no person shall be subject to any penalty for failing to comply with a collection of information subject to the Paperwork Reduction Act (PRA) that does not display a valid control number. Questions concerning the OMB control number and expiration date should be directed to Cathy Williams, Federal Communications Commission, (202) 418–2918 or via the Internet at *Cathy.Williams@fcc.gov.*

Federal Communications Commission.

Marlene H. Dortch,

Secretary.

[FR Doc. 05–16387 Filed 8–16–05; 8:45 am]

BILLING CODE 6712–01–P

FEDERAL COMMUNICATIONS COMMISSION

47 CFR Part 76

[FCC 05–81]

Implementation of the Satellite Home Viewer Extension and Reauthorization Act (SHVERA)

AGENCY: Federal Communications Commission.

ACTION: Final rule; announcement of effective date.

SUMMARY: The Federal Communications Commission received Office of Management and Budget (OMB) approval for the revised public information collection, OMB Control Number 3060–0980, Implementation of the Satellite Home Viewer Extension and Reauthorization Act of 2004, Procedural Rules, FCC 05–81. FCC 05–81 was published at 70 FR 21669, April 27, 2005. Therefore, the Commission announces that 47 CFR 76.66(d)(2) and (d)(5) will become effective on August 15, 2005.

DATES: The amendments to 47 CFR 76.66 (d)(2) and (d)(5) published at 70 FR 21669, April 27, 2005, will become effective on August 15, 2005.

FOR FURTHER INFORMATION CONTACT: Kenneth Lewis, Media Bureau, (202) 418–2622 or *kenneth.lewis@fcc.gov*. Questions concerning OMB control number 3060–0980 and the expiration date of the information collection should be directed to Cathy Williams, Federal Communications Commission, (202) 418–2918 or via the Internet at *cathy.williams@fcc.gov.*

SUPPLEMENTARY INFORMATION: The Federal Communications Commission has received OMB approval for the revised information collection, OMB Control Number 3060–0980, Implementation of the Satellite Home Viewer Extension and Reauthorization Act of 2004, Procedural Rules, FCC 05–81. FCC 05–81, Procedural Rules, which revises the local into local notification rule and creates the new rule for elections in markets in which significantly viewed signals are carried, were published in 70 FR 21669, April 27, 2005. Through this document, the Commission announces that OMB approval for OMB Control Number 3060–0980 was received on June 14, 2005 and was published at 70 FR 41735, July 20, 2005. The effective date for the rules in 47 CFR 76.66(d)(2) and (d)(5) is August 15, 2005.

Pursuant to the Paperwork Reduction Act of 1995, Public Law 104–13, an agency may not conduct or sponsor a collection of information unless it displays a currently valid control number. Notwithstanding any other provisions of law, no person shall be subject to any penalty for failing to comply with a collection of information subject to the Paperwork Reduction Act that does not display a valid control number.

Federal Communications Commission.

Marlene H. Dortch,

Secretary.

[FR Doc. 05–16388 Filed 8–16–05; 8:45 am]

BILLING CODE 6712–01–P

DEPARTMENT OF TRANSPORTATION

National Highway Traffic Safety Administration

49 CFR Part 571

[Docket No. NHTSA–2005–22113]

RIN 2127–AI09

Federal Motor Vehicle Safety Standards; Controls, Telltales and Indicators

AGENCY: National Highway Traffic Safety Administration (NHTSA), Department of Transportation (DOT).

ACTION: Final rule.

SUMMARY: In this document, we update our standard regulating motor vehicle controls, telltales and indicators. The standard specifies requirements for the location, identification, and illumination of these items. This rule extends the standard's telltale and indicator requirements to vehicles with a Gross Vehicle Weight Rating (GVWR) of 4,536 kg (10,000 pounds) and greater, updates the standard's requirements for multi-function controls and multi-task displays to make the requirements appropriate for advanced systems, and reorganizes the standard to make it easier to read. The standard requires, among other things, that certain controls, telltales and indicators be identified by specified symbols or words. While we proposed to expand the list of items for which specified identification is required, we decided, for purposes of this rule, to include only the items and identification previously specified in this standard or in another of our standards.

DATES: *Effective date:* The effective date for this final rule is February 13, 2006. *Compliance date:* The compliance date for the extension of the standard's telltale and indicator requirements to vehicles with a GVWR of 4,536 kg (10,000 pounds) or greater is September 1, 2013. The compliance date for all other requirements is February 13, 2006. Voluntary compliance is permitted immediately.

Petitions for reconsideration: Petitions for reconsideration of the final rule must be received not later than October 3, 2005.

ADDRESSES: Petitions for reconsideration of the final rule must refer to the docket and notice number set forth above and be submitted to the Administrator, National Highway Traffic Safety Administration, 400 Seventh Street, SW., Washington, DC 20590, with a copy to Docket Management, Room PL–

401, 400 Seventh Street, SW., Washington, DC 20590.

FOR FURTHER INFORMATION CONTACT: For non-legal issues you may call Ms. Gayle Dalrymple, Office of Crash Avoidance Standards at (202) 366–5559. Her FAX number is (202) 366–7002. For legal issues, you may call Ms. Dorothy Nakama, Office of the Chief Counsel at (202) 366–2992. Her FAX number is (202) 366–3820. You may send mail to both of these officials at National Highway Traffic Safety Administration, 400 Seventh St., SW., Washington, DC, 20590.

SUPPLEMENTARY INFORMATION:

Table of Contents

I. Background
II. Notice of Proposed Rulemaking of September 2003
A. Standardizing Identifying Symbols for Additional Controls and Displays
B. Updating Identification Requirements for Advanced Multi-Function Controls With Remote Displays
C. Harmonizing With Canadian and International Standards
III. Public Comments and NHTSA's Response
A. New Definitions
1. ''Adjacent''
2. ''Common space''
3. ''Control''
4. ''Indicator''
5. ''Multi-function control'' and ''Multi-task display''
6. ''Telltale''
B. Applicability to Vehicles of 4,536 kg (10,000 lb) or Greater GVWR
C. Illumination, and Visibility Requirements Under Daylight and Nighttime Conditions
D. Proposed New Tables
E. Common Space for Displaying Multiple Messages
F. Identification of Multi-function Controls
G. No Conforming Amendments to Other Standards
H. Location and Visibility Requirements
I. Other Issues
1. Combining Controls
2. Color
IV. Leadtime and Costs
V. Final Rule
VI. Statutory Bases for the Final Rule
VII. Regulatory Analyses and Notices
A. Executive Order 12866 and DOT Regulatory Policies and Procedures
B. Regulatory Flexibility Act
C. National Environmental Policy Act
D. Executive Order 13132 (Federalism)
E. Executive Order 12988 (Civil Justice Reform)
F. Paperwork Reduction Act
G. National Technology Transfer and Advancement Act
H. Unfunded Mandates Reform Act of 1995
I. Plain Language
J. Regulation Identifier Number (RIN)
Final Regulatory Text

I. Background

NHTSA issued the original version of Federal Motor Vehicle Safety Standard (FMVSS) No. 101, *Controls and Displays*, in 1967 (32 FR 2408) as one of the initial FMVSSs. The standard applies to passenger cars, multipurpose passenger vehicles (MPVs), trucks, and buses.[1] The purpose of FMVSS No. 101 is to assure the accessibility and visibility of motor vehicle controls and displays under daylight and nighttime conditions, in order to reduce the safety hazards caused by the diversion of the driver's attention from the driving task, and by mistakes in selecting controls.

At present, FMVSS No. 101 specifies requirements for the location (S5.1), identification (S5.2), and illumination (S5.3) of various controls and displays. It specifies that those controls and displays must be accessible and visible to a driver properly seated wearing his or her safety belt. Table 1, ''Identification and Illumination of Controls,'' and Table 2, ''Identification and Illumination of Displays,'' indicate which controls and displays are subject to the identification requirements, and how they are to be identified, colored, and illuminated.

II. NPRM of September 2003

On September 23, 2003, NHTSA published in the **Federal Register** (68 FR 55217)[2] a notice of proposed rulemaking (NPRM) to modernize FMVSS No. 101. Two primary concerns were behind the proposal. The first was the standardization of identifying symbols for additional controls and displays, and the second was updating identification requirements for advanced multi-function controls with remote displays. In addition, the NPRM sought to harmonize FMVSS No. 101 with a draft Global Technical Regulation on controls and displays that the United States and Canada had sponsored jointly. Each of these issues is discussed below.

A. Standardizing Identifying Symbols for Additional Controls and Displays

In the NPRM, we tentatively concluded that requiring vehicle controls and displays to be consistently identified by means of an internationally recognized set of graphics in all vehicles would promote safety. We believed that this was particularly important as the controls and displays in vehicles increase in number and complexity and that the consistent use in all new motor vehicles of a single symbol for each function would increase the recognition of that function among all drivers. Moreover, the internationally recognized symbols are independent of any particular language.

The function of FMVSS No. 101 is not to limit or regulate the number of controls, telltales and indicators in vehicles but to ensure that when a regulated control, telltale, or indicator is provided, it is properly identified. Whether that identification is a word, an abbreviation, or a graphic, it is a means of representing a specific vehicle function or condition. We tentatively concluded that, in response to the increase in the number of controls in vehicles, it would be desirable to require each control to be labeled with the same symbol in every vehicle in order to minimize driver confusion and distraction. We believed that, after a period of learning by drivers, symbols would be generally recognized as to the function or condition they represent. The foregoing considerations led us to propose the use of graphic symbols that were, with a few exceptions (that were discussed in the NPRM), the same as that specifically established by the International Standards Organization (ISO) for controls and displays in motor vehicles, ISO 2575:2000.

B. Updating Identification Requirements for Multi-function Controls With Remote Displays

In the NPRM, we tentatively concluded that there was a need to amend FMVSS No. 101 in response to the development and increased use of advanced multi-function controls linked to a display screen remote from the control itself to convey information to drivers about the status of multiple vehicle systems and means of controlling those systems. This was partially in response to a petition for rulemaking from the Alliance of Automobile Manufacturers (Alliance). We stated our belief that FMVSS 101's current requirement that the identification for controls ''be placed on or adjacent to the control'' restricts unnecessarily the design of these types of systems. Accordingly, we proposed two new definitions and a limited exclusion from the adjacency requirement to accommodate those systems. The proposed definitions were:

Multi-function control means a control through which the driver may select, and affect the operation of, more than one vehicle function.

Multi-task display means a display on which more than one message can be shown simultaneously.

The proposed exclusion to the adjacency requirement of S5.1.3 was:

[1] At present, the standard's requirements for displays do not apply to vehicles 4,536 kilograms (10,000 pounds) or more GVWR. However, this final rule extends the Standard's requirements for displays to those vehicles.

[2] DOT Docket No. NHTSA–03–16194.

S5.1.4 The requirement of S5.1.3 does not apply to a multi-task control, provided:

(a) The control is depicted in an associated multi-task display,

(b) The associated multi-task display is visible to the driver under the conditions of S5.6.1 and S5.6.2, and

(c) All of the vehicle systems for which control is possible from the multi-task control are identified in the associated multi-task display. Subfunctions of the available systems need not be shown on the top-most layer of the multi-task display.

C. Harmonizing With Canadian and International Standards

Another topic of the NPRM was international harmonization of controls and displays standards. NHTSA consulted with Transport Canada (Canada's counterpart to the U.S. Department of Transportation) in the late 1990s about Canada's controls and displays standard, *i.e.*, Canadian Motor Vehicle Safety Standard 101. The joint goal of NHTSA and Transport Canada in these talks was to develop potential revisions to their respective standards so that, consistent with safety needs, they would be better organized, easier to understand, and consistent with the positions of the U.S., Canada, and European standards organizations. The NPRM was based in part on that collaboration.

The United States participates in the United Nations/Economic Commission for Europe World Forum for Harmonization of Vehicle Regulations (also known as Working Party 29 or WP. 29) under a 1998 Agreement known as the 1998 Global Agreement. The 1998 Global Agreement provides for the establishment of global technical regulations (GTRs) regarding the safety, emissions, energy conservation and theft prevention of motorized wheeled vehicles, equipment and parts. The Agreement contains procedures for establishing global technical regulations by either harmonizing existing regulations or developing new ones.

On July 18, 2000, in anticipation of the 1998 Global Agreement's entry into force, NHTSA published a request for public comments on the agency's list of preliminary recommendations of standards or aspects of standards for consideration by the Contracting Parties to the Agreement in prioritizing the development and establishment of GTRs under the Agreement (65 FR 44565). One of NHTSA's preliminary recommendations in the notice concerned controls and displays. In March 2002, WP. 29 adopted a work program of initial priorities for development of GTRs under the 1998 Global Agreement that included controls and displays. The regulatory text proposed in the NPRM was essentially the same as the draft GTR at that time.

The United States continues to participate in the development of a GTR on controls and displays. At such time as there is a final GTR on controls and displays, we will consider it in accordance with the 1998 agreement.

III. Public Comments and NHTSA's Response

In response to the NPRM, NHTSA received comments from: AAA; Advocates for Highway and Auto Safety; Alliance of Automobile Manufacturers (Alliance); American Honda Motor Co., Inc.; American Trucking Associations (ATA); Applied Safety and Ergonomics, Inc.; Association of International Automobile Manufacturers, Inc. (AIAM); Bendix Commercial Vehicle Systems LLC; BMW Group; Blue Bird Company; Fed Ex; General Motors North America; Hino Motors, Ltd.; Honda Motor Company, Ltd. (in Tokyo); ISO TC22/SC13 WG5; Mr. Mac B. Johnson; National Automobile Dealers Association; Public Citizen; Ms. Barb Sachau; Truck Manufacturers Association (TMA); Mr. Frank D. Werner; and Western Ergonomics.

Most of the commenters addressed the proposal to include an expanded set of controls, telltales, and indicators in Tables 1 and 2, and the identification to be used for those items. Many commenters opposed the proposed expansion of the items to be regulated and identifying symbols, and provided detailed comments on many of the proposed symbols. Comments were also received on the issue of regulating multi-function controls and multi-task displays, especially in relation to the S5.13 requirement that identifications for controls, telltales and indicators must be placed ''on or adjacent to the telltale, indicator or control that it identifies.'' The comments addressing this issue generally were in favor of it, with several recommending minor changes to the proposed regulatory text.

After considering the public comments, we have decided to adopt a provision to provide a limited exclusion for multi-function controls from the standard's requirement that identification be ''on or adjacent'' to the control. We made some changes to the proposed provision in light of the comments.

We are also extending FMVSS No. 101's display requirements to vehicles with GVWRs of 4,536 kg (10,000 pounds or greater). The compliance date for this extension is September 1, 2013.

We decided not to expand at this time the symbols or other items listed in FMVSS No. 101, other than adding items already included in other FMVSSs. While we may revisit this issue in a future rulemaking, we would want to conduct additional analyses and possibly research relating to issues raised by the commenters. We will continue to regulate the same controls, telltales and indicators as are presently specified in Tables 1 and 2 in FMVSS No. 101 or in another Federal motor vehicle safety standard, and to specify the same symbols or words. The format of the tables is changed so that in this final rule, Table 1 specifies the identifiers for controls, telltales and indicators that have color or illumination requirements, while Table 2 specifies the identifiers for controls, telltales and indicators that have no color or illumination requirements.

The primary issues raised by NHTSA in the NPRM, the public comments, and NHTSA's response to the comments, are discussed below.

A. New Definitions

In S4, *Definitions*, after considering all public comments received on each of the proposed new definitions, NHTSA has adopted as final the following new or amended definitions:

1. ''Adjacent''—At present, the term ''adjacent'' appears in FMVSS No. 101's ''Identification'' section at S5.2.1(a): ''The identification appears on or adjacent to the control'' and at S5.2.3: ''The identification required or permitted by this section shall be placed on or adjacent to the display that it identifies.'' The word ''adjacent'' is not presently defined in FMVSS No. 101. In the past, the term ''adjacent'' has been the subject of several requests for interpretation of what ''adjacent'' means for controls that are identified by images that appear on a digital display screen. In the September 2003 NPRM, we proposed to define ''adjacent'' as:

Adjacent, with respect to a symbol identifying a control, telltale or indicator, means:

(a) The symbol is in close proximity to the control, telltale or indicator; and

(b) No other control, telltale, indicator, identifying symbol or source of illumination appears between the identifying symbol and the telltale, indicator, or control that the symbol identifies.

We explained that this definition of ''adjacent'' would put into the regulatory text the definition of ''adjacent'' that we have used in FMVSS No. 101 interpretation letters such as a

June 8, 2000 letter to an unidentified company, and a February 27, 2001 letter to Mazda North American Operations.

In its comments, Western Ergonomics, Inc. (WEI) suggested that the term ''close proximity'' (used in paragraph (a) of the definition) be defined: ''* * *in terms of the visual angle between symbol and control, as defined relative to driver's eye location.'' We have decided not to adopt this suggestion. We believe the meaning of ''close proximity'' is sufficiently clear without additional language. Therefore, the definition of ''adjacent,'' as proposed in the NPRM, is adopted in the final rule.

2. ''Common space''—At present, ''common space'' is used but not defined in FMVSS No. 101. In the September 2003 NPRM, we proposed to define ''common space'' as: ''an area on which more than one telltale, indicator, identifier or other message may be displayed, but not simultaneously.'' The proposed definition was intended to address designs in which a ''common space'' is used to display more than one warning, message or identification, but not simultaneously. No commenter commented on the proposed definition and, in this final rule, we adopt as final, the definition of ''common space'' proposed in the NPRM.

3. ''Control''—At present, FMVSS No. 101 regulates both hand-operated controls and foot-operated controls. However, the requirement for foot-operated controls are very limited. Specifically, FMVSS No. 101 requires that certain foot-operated controls, *i.e.*, those for service brake, accelerator, clutch, high beam, windshield washer and windshield wiper, must be operable by the driver.

In the September 2003 NPRM, we proposed to limit the term ''control'' (and thus FMVSS No. 101 itself), to hand-operated controls because we were unaware of any current vehicles whose high beam, or windshield washer or wiper controls are foot-operated and because we saw no need, as a practical matter, to include a requirement that service brakes, accelerators, and clutches be operable by the driver.

Federal Express and the American Trucking Association (ATA) did not agree with NHTSA's distinguishing between hand and foot controls, as ''a control is a control regardless of hand or foot activated.'' Noting that while accelerators and clutches do not always have indicators on the dash, ATA stated that a truck service brake does have an indicator light/release light on the dash—some are hand and some are foot-activated, but both are activated by the driver and deactivated by the driver.

NHTSA notes that there is a distinction between ''indicators'' and ''controls.'' It is the service brake indicator that must always appear ''in view of the driver.''

We further note that defining ''controls'' as hand-operated makes repeating ''hand-operated'' unnecessary whenever the word ''control'' is used in FMVSS No. 101. We received no public comment informing us of any current vehicles with high beam, windshield washer or wiper controls that are foot operated. We continue to see no need, as a practical matter, to include a requirement that service brakes, accelerators, and clutches be operable by the driver. Therefore, in this final rule, NHTSA adopts the definition of ''control'' proposed in the NPRM.

4. ''Indicator''—In the September 2003 NPRM, we proposed to use ''indicator'' to replace the term ''gauge'' because ''gauge'' connotes an analog display whereas ''indicator'' does not. We proposed to define ''indicator'' as ''a device that shows the magnitude of physical characteristics that the instrument is designed to sense.'' No commenter addressed the proposed definition, and in this final rule, NHTSA adopts the definition of ''indicator'' proposed in the NPRM.

5. ''Multi-function control'' and ''multi-task display.'' As discussed earlier, in the September 2003 NPRM, we proposed definitions of ''multi-function control'' and ''multi-task display'' to address advanced vehicle designs that use controls that select several different vehicle functions and display information about those functions on a display that is remote from the control. A multi-function control was proposed to be defined as: ''a control through which the driver may select, and affect the operation of, more than one vehicle function.'' A multi-task display was proposed to be defined as: ''a display on which more than one message can be shown simultaneously.''

6. ''Telltale''—In the September 2003 NPRM, we proposed to define ''telltale'' as an ''optical signal that, when illuminated, indicates the actuation of a device, a correct or improper functioning or condition, or a failure to function.'' No commenter addresses the proposed definition, and in this final rule, NHTSA adopts the definition of ''telltale'' proposed in the NPRM.

B. Applicability to Vehicles of 4,536 kg (10,000 Pounds) or Greater GVWR

At present, S5 of FMVSS No. 101 excludes vehicles of 4,536 kg (10,000 pounds) or greater GVWR from its location, illumination, and color requirements for displays. We proposed to extend the standard's display requirements to these vehicles to ensure that drivers are able to see and identify their displays as easily as do drivers of lighter vehicles.

In response to the NPRM, the American Trucking Association (ATA) recommended that vehicles with GVWRs of 4,536 kg (10,000 pounds) or greater continue to be excluded from the display requirements of FMVSS No. 101. ATA commented that NHTSA did not present data regarding the safety benefits of enacting the proposed rules and that the compliance costs are not trivial:

> Tooling and redesign costs of traditional switchgear, controls and displays are not amortized over the life of one model cycle. They continue to be used over many cycles and thus, by forcing manufacturers to redesign their controls it will increase the design, development, documentation, training, maintenance, and repair costs of all parties involved.

While we have considered ATA's comment, we continue to believe that there is a safety need for drivers of heavier vehicles to see and identify their displays, just as there is for drivers of lighter vehicles.

We note, however, that since (for reasons discussed below) Tables 1 and 2 include far fewer controls, telltales and indicators than proposed in the NPRM (and none of the ones exclusive to vehicles of 4,536 kg GVWR and over), the costs of meeting the requirements in this final rule are lessened considerably. Moreover, to address concerns about costs, since vehicles of 4,536 kg (10,000 pounds) or greater GVWR have longer redesign cycles than do lighter passenger vehicles, we are providing an eight-year lead time for heavy vehicle compliance with the requirements for telltales and indicators.

C. Illumination, and Visibility Requirements Under Daylight and Nighttime Conditions

The present language of FMVSS No. 101 at S.5.3.3(a) states that means shall be provided for making controls, gauges, and the identification of those items ''visible to the driver under all driving conditions.'' In the September 2003 NPRM, we proposed the narrower language ''visible * * * under daylight and nighttime conditions'' because under some extreme lighting conditions (e.g. driving directly into a sunrise or sunset), it is virtually impossible to make illuminated items (even after adjusting the level of illumination) or non-illuminated items visible to the driver. NHTSA stated its belief that, for the most part, the instances in which the driver cannot see symbols are of

short duration, and therefore would not cause a safety problem if the telltales and/or their identifiers were not visible to the driver during that short time period.

Commenting on the NPRM, and addressing illumination in general, Mr. Mac Johnson commented that paragraph (e) of S5.3.1 *Timing of illumination* should be ''liberalized'' to permit the telltales to be illuminated at more times than just the malfunctions or vehicle conditions the telltales are designed to indicate, or when the propulsion system is activated. According to Mr. Johnson, FMVSS No. 101 should be expanded to allow the manufacturer the option of including a ''manual test'' of any telltale or group of telltales while electrical power is on. Being able to test subsets of all the telltales allows the driver to see where each is located and what each looks like. NHTSA has accommodated Mr. Johnson's suggestion by deleting the words ''upon propulsion system activation'' from S5.3.1.(e).

Hino Motors asked for an exclusion from illumination requirements when the control is ''located on the floor, floor console, steering wheel, or steering column, or in the area of windscreen [windshield] header, or to controls for heating and air conditioning system if the system * * * does not direct air directly upon the windscreen.'' We note that this exclusion was included in the NPRM at S5.3.1(a) at p. 55227 in the **Federal Register**. In this final rule, Hino Motors will find the requested exemption for the specified controls from the illumination requirements at S5.3.1(a) in the second sentence.

TMA asked NHTSA to clarify if it will continue to allow, for controls and indicators, adjustment of brightness to a level that is not visible to a seated driver. NHTSA's response is that the language at S5.3.3(b)(3) allowing ''levels of brightness at which [controls, gauges and the identification of those items] are not visible'' was removed to clean up the regulatory text. The language at S5.3.3(b)(3) requires two levels of brightness, and describes those required levels. It should be clear that the manufacturer may provide as many additional levels of brightness as it desires. However, the language was of long standing in FMVSS No. 101, so to avoid confusion, in this final rule, the language is restored at S5.3.2.2(d).

Blue Bird recommended that ''every illumination system contain manual controllability, even though an automatic system is incorporated.'' We note that, as discussed above, we are including certain language in S5.3.2.2(d) that is currently part of the standard but was omitted from the proposal. S5.3.2.2(d)(1) states: ''If the level of brightness is adjusted by automatic means to a point where those items or their identification are not visible to the driver, means shall be provided to enable the driver to restore visibility.''

After considering the comments, we are adopting the proposed language at S5.3.2.1 that means shall be provided for illuminating the indicators, identifications of indicators and identifications of controls listed in Table 1 to make them ''visible to the driver under daylight and nighttime driving conditions.''

D. Proposed New Tables

In the NPRM we proposed two tables, each of which would include both controls and displays. In Table 1, we proposed to specify symbols, color requirements, and whether illumination is required for controls, telltales, and indicators for which we proposed illumination or color requirements. We noted that the proposed requirement reflected requirements already in FMVSS No. 101, Canadian Motor Vehicle Safety Standard No. 101, ECE 78/316, or are included in the draft GTR on ''Hand controls, telltales, and indicators.''

We also proposed Table 2, which would specify symbols for controls, telltales, and indicators other than those listed in proposed Table 1. Table 2 would not include color or illumination requirements. The symbols in each of the proposed tables were essentially identical to the ISO symbols, with a few exceptions. No English words or abbreviations appeared in the proposed tables, except that we proposed that the brake malfunction telltales include the word ''Brake'' for five years for light vehicles and eight years for heavy vehicles.

The proposed expansion of the FMVSS No. 101 tables was the subject of most of the public comments. In general, the commenters addressing this issue recommended that the agency not expand Tables 1 and 2.

Most of the commenters addressing the proposed tables generally stated the view that symbols would not be as well understood by the driver as English words. Some commenters objected to the number of vehicle functions for which we proposed to require a specific symbol.

After considering the public comments for this final rule, we have decided not to expand at this time the symbols or other items listed in FMVSS No. 101, other than including some items already required by other FMVSSs. While we may revisit this issue in a future rulemaking, we would want to conduct additional analyses and possibly research relating to issues raised by the commenters.

We have, however, decided to adopt the format of the tables proposed in the NPRM, to make identifiers easier to find in the tables. Therefore, in this final rule, for controls, telltales, and indicators, Table 1 specifies identifiers, color requirements and whether illumination is required for a control, telltale, or indicator, and specifies which have illumination or color requirements. Table 2 specifies identifiers for controls, telltales, and indicators other than those listed in Table 1. No color or illumination requirements are specified in Table 2. The final rule at S5.2.3 states: ''Supplementary symbols, words, or abbreviations may be used at the manufacturer's discretion for the purpose of clarity in conjunction with any symbol, word, or abbreviation specified in Table 1 or Table 2.''

In addition, we are addressing comments made about the following individual symbols proposed in Table 1 or Table 2 in the NPRM:

TMA commented on the ''windshield defrosting and defogging system'' and ''rear window defrosting and defogging system'' icons. TMA stated that these ''illuminated telltale[s] should be green, not yellow.'' NHTSA notes that Table 1 of this final rule specifies identification requirements for controls for the windshield defrosting and defogging system and rear window defrosting and defogging system. (These controls are included in the existing FMVSS No. 101). For these controls, NHTSA specifies illumination, but not a color.

TMA also commented on tire malfunction indicators, including ones indicating low pressure. It stated that provision should be made for a pictogram of a truck or tractor as well as a car.

We note that as part of the agency's April 8, 2005 final rule (67 FR 18136) on Tire Pressure Monitoring Systems (TPMS), we adopted a symbol depicting a car for low tire pressure telltales which identify which tire has low pressure. That rule requires TPMS on ''new passenger cars, multi-purpose passenger vehicles, trucks and buses with a gross vehicle weight rating (GVWR) of 4,536 kg (10,000 pounds) or less, except those with dual wheels on an axle.'' Thus, there are presently no TPMS requirements for buses or trucks over 4,536 kg, although TPMS could be provided voluntarily for these vehicles. We agree that different identification might be appropriate for telltales for heavy vehicles. Accordingly, we are adding a footnote indicating that the

standard's requirements for telltales relating to TPMS apply only to vehicles subject to the TPMS standard.

TMA commented that requiring the odometer to spell out ''MILES'' instead of ''Mi'' is overly restrictive. In this final rule, in Table 2, the odometer must specify ''kilometers or km,'' if the unit of measurement is the kilometer. Otherwise, no identifier is required.

The American Trucking Association (ATA) stated that the automatic vehicle speed indicator does not account for adaptive cruise control systems, which maintain headway in either time or distance from a lead vehicle. Automatic vehicle speed is a control specified in Table 1 of this final rule. The control must be illuminated. In some cases, adaptive cruise controls are not turned on or off by the driver, but are regulated by the vehicle's computer system. NHTSA believes that there is no ambiguity about the systems to which the automatic vehicle speed control entry applies, since the entry is of long standing. Adaptive cruise controls were developed after the automatic vehicle speed control entry was created. Thus, the automatic vehicle speed control entry in Table 1 does not apply to adaptive cruise controls.

ATA also commented that the heating and/or air conditioning fan symbol does not address the need for engine fan switches, which can be controlled by the operator. NHTSA notes that in this final rule, the control is clearly specified in Table 1 as ''heating and/or air conditioning fan,'' not engine fan. Thus, the Table 1 requirements apply to controls for the fan regulating the vehicle interior's heating and/or air conditioning. The Table 1 requirements do not apply to engine fan controls. Nothing in this final rule prevents manufacturers from labeling the engine fan control as they see fit.

Western Ergonomics, Inc. stated that allowing speedometers to be indicated in km/h as an option, rather than as a requirement (with MPH) is a ''mistake,'' since many American vehicles are driven in Canada where the speed limits are designated in km/h. We note that although many American cars are driven in Canada, most of them are not. Since speed limits in the U.S. are expressed in MPH, in this final rule we are only requiring speedometers to be indicated in MPH. However, the rule permits manufacturers, at their option, to designate speedometers in MPH and km/h. Americans who drive in Canada (and other parts of the world that use kilometers) can look for the km/h designation in the speedometers before purchasing, leasing, or renting motor vehicles.

E. Common Space for Displaying Multiple Messages

At present, FMVSS No. 101 specifies that a common space may be used to display messages from any source, subject to several requirements. One of the current requirements is that the telltales for the brake, high beam, turn signal, and safety belt (telltales of particular safety significance) may not be shown in the ''common space.'' This requirement ensures that these telltales, if activated, are always visible to the driver.

In the September 2003 NPRM, we proposed to expand the list of telltales (of particular safety significance) that could be in a common space, but could not share a common space with other specified telltales of particular safety significance, so the list of telltales would include: The telltales for any brake system malfunction; front air bag malfunction; side air bag malfunction; low tire pressure; passenger air bag off; high beam; turn signal; and seat belt. We proposed in the NPRM that if one of these telltales is activated, it is required to displace any other symbol or message in that common space while the underlying condition that caused the telltale's activation exists.

We did not receive any public comments on the proposed changes to the common space for displaying multiple messages. Therefore, in this final rule, we are adding to S5.5.2 the specified telltales of particular safety significance that we proposed in the NPRM. S5.5.2 will read: ''The telltales for any brake system malfunction, the air bag malfunction, the side air bag malfunction, low tire pressure, passenger air bag off, high beam, turn signal and seat belt must not be shown in the same common space.'' The changes adopted in this final rule continue to ensure that these telltales of particular safety significance, if activated, will always be visible to the driver, but give vehicle manufacturers increased flexibility in instrument panel design.

F. Identification of Multi-Function Controls

As explained in detail in the September 2003 NPRM, over the past several years, we have addressed several requests for interpretation asking how FMVSS No. 101's requirements for identifying controls apply to advanced design concepts that use one control to access many vehicle functions, and that display those functions on a screen that is remote from the control. Our interpretations include one dated June 8, 2000 to a manufacturer whose identity is confidential, a February 28, 2001 interpretation to Mazda, and a January 10, 2002 interpretation to Porsche.

Over the years, we have sought to interpret FMVSS No. 101 in a broad manner, to accommodate new technology. As we explained in our letter to Porsche, however, there is a limit to how much we can do by interpretation as opposed to conducting rulemaking to facilitate the use of new technology.

In the NPRM, we stated our belief that FMVSS No. 101's current requirement that the identification for controls ''be placed on or adjacent to the control'' has a particular potential to restrict the use of these advanced design concepts. The system that Porsche asked about included a ''combination multi-function switch/rotary dial,'' similar to a joystick, located on the center console between the driver's seat and the front passenger seat, and a small display screen on the dashboard. The display screen provided the identification for the various functions of the dial, which changed as different functions were selected. Thus, the dial needed to be operated in conjunction with the display screen. As we explained in our letter to Porsche, however, the dial (i.e., the control) and the related display (which provided the identification for functions of the control) could not be considered to be ''adjacent,'' given the distance between them.

On November 23, 2001, the agency received a petition for rulemaking from the Alliance of Automobile Manufacturers (Alliance) to eliminate the adjacency requirement from the current FMVSS No. 101, S5.2.1(a). The agency granted the petition and, in the September 23, 2003 NPRM, addressed the issues raised in the Alliance petition. The Alliance stated the view that the current language of S5.2.1(a)

> * * * has become an inadvertent design restriction on technologically advanced vehicle control and display systems. The Alliance further stated that it believes that such an amendment is needed to facilitate the introduction of advanced vehicle control and display systems that can enhance vehicle safety by reducing the need for a driver to take his or her eyes [off] the roadway to operate multiple vehicle controls and by reducing the potential for driver confusion that could arise from ''information overload'' from multiple identification symbols on a single control.

The Alliance recommended particular language to be used to replace S5.2.1(a).

In the NPRM, we noted several concerns about the Alliance recommendation and proposed language that would give a limited exclusion

from the adjacency requirement if the control is depicted in a display that is located in the driver's view and that clearly shows all functions available from that control. We also proposed a definition for ''multi-function control'' (as discussed above). Further, we sought comment on issues related to the use of multi-function controls and multi-task displays as well as comment on the proposed regulatory language itself.

The Alliance and GM commented that a requirement that the control be ''depicted'' in the display (proposed at S5.1.4(a)) is too design restrictive and not technically consistent with the designs of advanced control and display systems. The Alliance stated that the control itself is not depicted in the multi-task display; rather, it is the function being displayed that is depicted.

The Alliance and GM also expressed concern that the proposed language stated that ''all'' of the vehicle systems for which control is possible from the multi-task control must be identified in the associated multi-task display. They noted that this language appeared to extend to controls that NHTSA does not regulate, such as sound system controls.

These commenters suggested the following language for S5.1.4:

S5.1.4 The requirement of S5.1.3 does not apply to a multi-function control, provided:

(a) The control is associated with a multi-task display,

(b) The multi-task display is visible to the driver under the conditions of S5.6.1 and S5.6.2, and

(c) Each system containing any control listed in column 1 of Table 1 that can be selected from the multi-task control is identified in the associated multi-task display. Subfunctions of the available systems need not be shown on the top-most layer of the multi-task display.

In response to these comments, we believe GM/Alliance's suggested language of ''associated with'' is insufficient. We believe that the driver must have some visual clue that the display contains information about the functions available from the multifunction control. However, while a depiction of the multi-function control would provide the driver the necessary information, we agree that it is unnecessary to limit the identification to such a depiction. Accordingly, the final rule provides, as one of the conditions that must be met in order for a multi-function control not to be subject to the identification adjacency requirement, that the associated multi-task display must identify the multi-function control with which it is associated graphically or using words. It is up to the manufacturer to decide which identifying graphics or words to use for its design.

As to the identification of the functions operated by the multi-function control, we note that there are many potential designs that manufacturers could use. Some but not all designs may involve multiple layers. A multi-layer design might include several vehicle systems that are depicted on the top-most layer, *e.g.*, climate, navigation, and audio, whose specific control functions are operated by scrolling through one or more subsequent layers. For example, selection of ''climate'' by a vehicle operator might lead to a second layer depicting heating and cooling, the selection of which leads to a third screen depicting temperature and fan speed.

We agree with the Alliance that it would not be appropriate to require the various subsystems to be depicted on the top-most layer. There would often not be space to depict all such subsystems and, even if there were, identification of numerous subsystems might create a cluttered appearance and cause confusion. Also, recognizing the large variety of potential designs, we want to take care not to establish requirements that may be unnecessarily design-restrictive.

We believe it is appropriate to focus on requirements for the identification to be provided in two situations: (1) the top-most layer of any multi-function control that has layers, and (2) the identification of active functions of controls listed in Tables 1 and 2, *i.e.*, functions that are immediately affected by operation of the control to change the state of the vehicle or subsystem.

Accordingly, for the final rule, S5.1.4 states:

S5.1.4 The requirement of S5.1.3 does not apply to a multi-function control, provided the multi-function control is associated with a multi-task display that:

(a) Is visible to the driver under the conditions of S5.6.1 and S5.6.2,

(b) Identifies the multi-function control with which it is associated graphically or using words,

(c) For multi-task displays with layers, identifies on the top-most layer each system for which control is possible from the associated multi-function control, including systems not otherwise regulated by this standard. Subfunctions of the available systems need not be shown on the top-most layer of the multi-task display, and

(d) Identifies the controls of Table 1 and Table 2 with the identification specified in those tables or otherwise required by this standard, whenever those are the active functions of the multi-function control. For lower levels of multi-task displays with layers, identification is permitted but not required for systems not otherwise regulated by this standard.

As to the Alliance's concern that identification is required for controls that FMVSS No. 101 does not otherwise regulate, we note that, for the final rule, such additional identification is very limited. First, since S5.1.4 simply provides an exception to S5.1.3, it only has application for controls that include functions specifically regulated by FMVSS No. 101. Second, the rule only requires identification of additional items (not otherwise regulated by the standard) for the top-most layer of the associated multi-task display.

We believe that to the extent manufacturers include additional functions (not otherwise regulated by FMVSS No. 101) as part of the same multi-function control that includes items listed in the standard, it would be confusing if those additional functions were not identified. This could make it more difficult for users to operate the control for the items specifically addressed by FMVSS No. 101. However, under the final rule, manufacturers may identify the additional functions in any way they choose, and the requirement only applies to the top-most layer of the associated multi-task display. We do not believe this will be burdensome and, in fact, believe manufacturers would be highly likely to provide such identification in the absence of such a requirement.

We are also requiring that the controls of Table 1 and Table 2 be identified with the identification specified in those tables or otherwise required by the standard, whenever those are the active functions of the multi-function control.

We note that for a multi-task display with layers, paragraph (c) would require identification on the top-most layer of each system for which control is possible from the associated multi-function control, including systems not otherwise regulated by this standard. Paragraph (d) would then require any controls listed in Table 1 and Table 2 to be identified with the identification specified in those tables or otherwise required by this standard, whenever those are the active functions of the multi-function control.

It is possible that there could be one or more intermediate layers that are not active, *e.g.*, layers which are used not to immediately change the state of the vehicle or subsystem but instead take the user to a specific control that is active. We are not specifying

identification requirements for such intermediate, non-active layers.

To illustrate this, we will consider the following example of a multi-function control with an associated multi-function display. The top-most layer of the display includes several systems, including climate control.

FIGURE 1.—ILLUSTRATIVE EXAMPLE OF SYSTEMS AND CONTROLS VISIBLE ON DIFFERENT LAYERS OF A MULTI-TASK DISPLAY

System or function visible on display	Layer
Climate	1 (top-most)
Heat, Cool	2
Temperature Setting Fan Speed.	3

Paragraph (c) would require identification of the climate system on the top-most layer. Since heating and air conditioning system (as well as heating and/or air conditioning fan) are listed in Table 1, paragraph (d) would require the controls to be identified with the identification specified in the table or otherwise required by the standard, whenever they are the active functions of the multi-function control.

As to the second layer, identification would be required if heat/cool were active functions, *e.g.*, if selection of heat/cool activated and deactivated the heating or air conditioning systems. Identification would not be required if selection of heat/cool did nothing more than move the multi-task display to the next level.

As to layer 3, assuming that temperature setting and fan speed are active functions, paragraph (d) would require the controls to be identified with the identification specified in the table or otherwise required by the standard. The table specifies a symbol for heating and/or air conditioning fan control. While the table doesn't specifically mention temperature setting, paragraph S5.2.8 requires identification to be provided for each function of any heating and air conditioning system control, and for the extreme positions of any such control that regulates a function over a quantitative range. If this identification is not specified in the tables, as in this case, it must be in word or symbol form unless color coding is used. If color coding is used to identify the extreme positions of a temperature control, the hot extreme must be identified by the color red and the cold extreme by the color blue.

It is possible that there could be one or more intermediate layers that are not active, *e.g.*, layers which are used not to immediately change the state of the vehicle or subsystem but instead take the user to a specific control that is active. We are not specifying identification requirements for such intermediate, non-active layers.

In its comments, Western Ergonomics, Inc. (WEI) asked whether the multi-function control itself must be labeled if a screen shows all the functions. WEI expressed the view that it ''seems appropriate to label the control itself in order for the operator to know which of several controls it is. This is more the case in larger trucks.'' In response, NHTSA notes that in the final rule, S5.1.4 excludes all multi-function controls (including the main multi-function control) from the ''on or adjacent to'' requirement, as long as the control is associated with a multi-task display that meets the specified conditions. Nothing in S5.1.4 prohibits the manufacturer from labeling the main multi-function control to meet the ''on or adjacent to'' requirement.

American Honda, addressing the issue of multi-function controls, stated that limiting FMVSS No. 101 to only those controls and displays that are related to motor vehicle safety, and are required by other FMVSSs would minimize the issues raised by regulating multi-function controls. American Honda also expressed the view that ''it remains important that critical controls, such as ignition switches, gear selection controls, headlight switches, windshield wipers, etc., must remain independent from multi-function controls and instantly accessible at all times.'' Regarding American Honda's suggestion that certain controls should not be permitted as part of a multi-function control system, NHTSA notes that since it did not propose, in the NPRM, to prohibit specific controls from being part of a multi-function control system, we are not addressing this issue by regulation at this time.

Federal Express commented that a multi-task display or a multi-function control must provide the driver audible or tactile feedback when a function occurs, so as to minimize the time a driver's focus is on the display. NHTSA notes that the issue of requiring audible or tactile feedback in conjunction with multi-function controls is outside the scope of this rulemaking. However, we note that nothing in FMVSS No. 101 prevents a manufacturer from providing such audible or tactile feedback on a multi-function control system.

G. No Conforming Amendments to Other Standards

In the NPRM, we noted that several other safety standards include requirements that could be affected by the proposed changes to FMVSS No. 101. We stated that we would make any necessary conforming amendments to those standards as part of the final rule amending FMVSS No. 101. In this final rule, because we have decided to keep all the current identifiers for telltales, and have included no new controls, telltales or indicators in Table 1 or Table 2, no conforming amendments to other FMVSSs are necessary. Changes made to FMVSS No. 101 as a result of the April 8, 2005 (67 FR 18136) final rule on Tire Pressure Monitoring Systems (TPMS) are included in this final rule.

H. Location and Visibility Requirements

In response to the NPRM, AIAM recommended that the requirements in FMVSS No. 101 be limited to ''safety critical'' controls, telltales, and indicators. AIAM stated that a more limited scope would still facilitate international harmonization since manufacturers would not be prohibited from using the international symbols if they chose to do so. AIAM also noted that each control listed in Table 1 must be located so as to be operable by the driver and that S5.1.2 requires that telltales and indicators listed in Table 1 or Table 2 must be visible to the driver. AIAM noted that certain proposed Table 1 or Table 2 items were not intended to be controlled by the driver while the vehicle is in motion. As examples, AIAM cited seat adjustment controls (not necessarily for the driver's seat), child lock controls, and controls for heating and air conditioning systems in the rear compartment areas.

NHTSA notes that, as discussed above, we are limiting FMVSS No. 101 controls to only those that are already specified in Tables 1 or 2, or in another FMVSS. Thus, AIAM's comments are made moot.

I. Other Issues

1. Combining Controls

In the NPRM, NHTSA asked for comment on whether there are any controls which, for safety reasons, should not be combined with other controls. TMA recommended that the parking brake, horn and hood opener controls should not be combined with any other controls. The Alliance stated that it did not believe that there is any need to regulate or restrict the combination of controls unless NHTSA has evidence or reason to believe that the combination of any particular controls would introduce adverse safety consequences.

As NHTSA stated earlier in Subsection F. on multi-function

controls, in the NPRM, it did not propose to prohibit the combination of specific controls. NHTSA is not adopting any requirements in this area.

2. Color

In the NPRM, NHTSA proposed language at S5.4.2 that stated: ''Any indicator or telltale not listed in Table 1 and any identification of that indicator or telltale must not be a color that masks the driver's ability to recognize any telltale, control or indicator listed in Table 1.'' TMA suggested the following alternative language: ''Any indicator or telltale not listed in Table 1 and any identification of that indicator or telltale must be in a color that cannot be confused with or that masks any other indicator or telltale listed in Table 1.''

NHTSA notes that TMA's suggested language does not state that indicators or telltales must not be in a color that masks the *driver's ability to recognize* any telltale, control or indicator listed in Table 1 (emphasis added). Since it believes in the importance of regulating the driver's ability to recognize telltales, controls and indicators, NHTSA will adopt as final the language it proposed at S5.4.2.

IV. Leadtime and Cost

In response to the NPRM, TMA agreed that the proposed eight year lead time for heavy truck manufacturers is appropriate. The Alliance stated that it is ''premature'' to set an effective date for vehicles to comply with an amended FMVSS No. 101. It was concerned about the proposed requirements for expanded standardized control and display identifications.

We are making the standard effective 180 days after publication, but providing a later compliance date for heavy vehicles.

For light vehicles, the amendments will not require design changes but will instead relieve restrictions. An important purpose of this final rule is to update the standard so that it appropriately addresses advanced multi-function controls. Since NHTSA has ensured that the telltales, indicators and controls specified in Tables 1 and 2 are all presently specified in FMVSS No. 101 or are specified in other FMVSSs, amendments to Tables 1 and 2 should have no substantive effects for manufacturers of vehicles under 4,536 kg GVWR. Moreover, the other changes made to the standard will not require changes to current light vehicles.

Design changes will be required for vehicles with GVWRs of 4,536 kg. (10,000 pounds) or greater, since these vehicles have not previously been subject to FMVSS No. 101's requirements for identification and illumination of displays. In this final rule, we recognize that heavy vehicles have a longer redesign cycle than do passenger vehicles. Thus, for vehicles of 4,536 kg GVWR or greater, the compliance date for the new requirements for telltales and indicators is approximately eight years after publication.

Early voluntary compliance with the provisions of this final rule is permitted immediately.

V. Final Rule

In this final rule, NHTSA amends FMVSS No. 101 as described in the sections above. The new rule extends the standard's telltale and indicator requirements to vehicle of Gross Vehicle Weight Rating (GVWR) 4,536 kilograms (10,000 pounds) and over, updates the standard's requirements for multi-function controls and multi-task displays to make the requirements appropriate for advanced systems, and reorganizes the standard to make it easier to read. Table 1 and Table 2 continue to include only those symbols and words previously specified in the controls and displays standard or in another Federal motor vehicle safety standard. However, both Tables 1 and 2 have been reorganized to make the symbols and words easier to find.

VI. Statutory Bases for the Rulemaking

We have issued this final rule pursuant to our statutory authority. Under 49 U.S.C. Chapter 301, *Motor Vehicle Safety* (49 U.S.C. 30101 *et seq.*), the Secretary of Transportation is responsible for prescribing motor vehicle safety standards that are practicable, meet the need for motor vehicle safety, and are stated in objective terms. 49 U.S.C. 30111(a). When prescribing such standards, the Secretary must consider all relevant, available motor vehicle safety information. 49 U.S.C. 30111(b). The Secretary must also consider whether a proposed standard is reasonable, practicable, and appropriate for the type of motor vehicle or motor vehicle equipment for which it is prescribed and the extent to which the standard will further the statutory purpose of reducing traffic accidents and deaths and injuries resulting from traffic accidents. Id. Responsibility for promulgation of Federal motor vehicle safety standards was subsequently delegated to NHTSA. 49 U.S.C. 105 and 322; delegation of authority at 49 CFR 1.50.

As a Federal agency, before promulgating changes to a Federal motor vehicle safety standard, NHTSA also has a statutory responsibility to follow the informal rulemaking procedures mandated in the *Administrative Procedure Act* at 5 U.S.C. Section 553. Among these requirements are **Federal Register** publication of a general notice of proposed rulemaking, and giving interested persons an opportunity to participate in the rulemaking through submission of written data, views or arguments. After consideration of the public comments, we must incorporate into the rules adopted, a concise general statement of the rule's basis and purpose.

The agency has carefully considered these statutory requirements in promulgating this final rule to amend FMVSS No. 101. As previously discussed in detail, we have solicited public comment in an NPRM and have carefully considered the public comments before issuing this final rule. As a result, we believe that this final rule reflects consideration of all relevant available motor vehicle safety information. Consideration of all these statutory factors has resulted in the following decisions in this final rule.

In the NPRM, we proposed to expand Tables 1 and 2 to make FMVSS No. 101 include the use of a graphic symbol set established by the International Standards Organization (ISO) specifically for controls and displays in motor vehicles, ISO 2575:2000, to make FMVSS No. 101 applicable to all ''vehicles'' of 4,536 kilograms (10,000 pounds) and greater, and to except multi-function controls and multi-task displays from the ''on or adjacent to'' requirement for identifying controls. Some commenters questioned the safety need to include all the ISO 2575:2000 symbols in FMVSS No. 101, and whether FMVSS No. 101 should be made applicable to vehicles of 4,536 kg GVWR and greater. In this final rule, NHTSA stated that after considering the comments, we have decided to retain the content of Tables 1 and 2 as specified in the current FMVSS No. 101, and to specify no others. However, we have decided to adopt the format of the tables proposed in the NPRM, to make identifiers easier to find in the tables. Therefore, in this final rule, for controls, telltales, and indicators, Table 1 specifies identifiers, color requirements and whether illumination is required for a control, telltale, or indicator, and specifies which have illumination or color requirements. Table 2 specifies identifiers for controls, telltales, and indicators other than those listed in Table 1. No color or illumination requirements are specified in Table 2.

We have also decided to extend the standard's telltale and indicator requirements to vehicles of 4,536 kg GVWRs and greater. We have also adopted a limited exclusion for multi-function controls and multi-task displays from FMVSS No. 101's ''on or adjacent to'' identification requirements for controls.

As indicated, we have thoroughly reviewed the public comments and adopted a final rule in light of comments. In the instances where we did not adopt a comment, we explain why we did not adopt the comment. We believe that this final rule amending FMVSS No. 101 meets the need for safety.

VII. Rulemaking Analyses and Notices

A. Executive Order 12866 and DOT Regulatory Policies and Procedures

Executive Order 12866, ''Regulatory Planning and Review'' (58 FR 51735, October 4, 1993), provides for making determinations whether a regulatory action is ''significant'' and therefore subject to Office of Management and Budget (OMB) review and to the requirements of the Executive Order. The Order defines a ''significant regulatory action'' as one that is likely to result in a rule that may:

(1) Have an annual effect on the economy of $100 million or more or adversely affect in a material way the economy, a sector of the economy, productivity, competition, jobs, the environment, public health or safety, or State, local, or Tribal governments or communities;

(2) Create a serious inconsistency or otherwise interfere with an action taken or planned by another agency;

(3) Materially alter the budgetary impact of entitlements, grants, user fees, or loan programs or the rights and obligations or recipients thereof; or

(4) Raise novel legal or policy issues arising out of legal mandates, the President's priorities, or the principles set forth in the Executive Order.

We have considered the impact of this rulemaking action under Executive Order 12866 and the Department of Transportation's regulatory policies and procedures. This rulemaking document was not reviewed by the Office of Management and Budget under E.O. 12866, ''Regulatory Planning and Review.'' The rulemaking action is also not considered to be significant under the Department's Regulatory Policies and Procedures (44 FR 11034; February 26, 1979).

For the following reasons, NHTSA concludes that this final rule will not have any quantifiable cost effect on motor vehicle manufacturers. We believe that for vehicles of less than 4,536 kg GVWR, all vehicle manufacturers already identify each control, telltale or indicator provided in vehicles they manufacture, as specified in this final rule or in another Federal motor vehicle safety standard. For manufacturers of vehicles of 4,536 kg GVWR and over, in this final rule, we are providing approximately eight years of leadtime, which is enough time for manufacturers to make necessary vehicle changes that coincide with continuous design changes in the affected motor vehicles for future model years.

We believe that as a result of this final rule, vehicle manufacturers would include minimal costs to make the identifications meet FMVSS No. 101. Manufacturers of motor vehicles under 4,536 kg GVWR must already meet the requirements specified in the two tables in this final rule. This final rule removes a regulatory restriction (for multi-function controls) requiring identification ''on or adjacent to'' the controls. This final rule specifies the symbols that must be used to identify each control, telltale or indicator in a motor vehicle. This requirement applies only if that control, telltale or indicator were listed in one of the two tables in this final rule, or in another Federal motor vehicle safety standard.

Because the economic effects of this final rule are so minimal, no further regulatory evaluation is necessary.

B. Regulatory Flexibility Act

Pursuant to the Regulatory Flexibility Act (5 U.S.C. 601 *et seq.*, as amended by the Small Business Regulatory Enforcement Fairness Act (SBREFA) of 1996), whenever an agency is required to publish a notice of rulemaking for any proposed or final rule, it must prepare and make available for public comment a regulatory flexibility analysis that describes the effect of the rule on small entities (*i.e.*, small businesses, small organizations, and small governmental jurisdictions). The Small Business Administration's regulations at 13 CFR Part 121 define a small business, in part, as a business entity ''which operates primarily within the United States.'' (13 CFR § 121.105(a)). No regulatory flexibility analysis is required if the head of an agency certifies that the rule will not have a significant economic impact on a substantial number of small entities. The SBREFA amended the Regulatory Flexibility Act to require Federal agencies to provide a statement of the factual basis for certifying that a rule will not have a significant economic impact on a substantial number of small entities.

The Administrator has considered the effects of this rulemaking action under the Regulatory Flexibility Act (5 U.S.C. 601 *et seq.*) and certifies that this final rule will not have a significant economic impact on a substantial number of small entities. The statement of the factual basis for the certification is that for vehicles of less than 4,536 kg GVWR, all vehicle manufacturers (including small manufacturers) already identify each control, telltale or indicator provided in vehicles they manufacture, as specified in this final rule or in another Federal motor vehicle safety standard. For small manufacturers of vehicles of 4,536 kg GVWR and over, in this final rule, we are providing approximately eight years of leadtime, which is enough time for manufacturers to make necessary vehicle changes that coincide with continuous design changes in the affected motor vehicles for future model years. For manufacturers of motor vehicles with multi-function controls, we are relieving a regulatory restriction.

For these reasons, and for the reasons described in our discussion on Executive Order 12866 and DOT Regulatory Policies and Procedures, NHTSA concludes that this final rule will not have a significant economic impact on a substantial number of small entities.

C. National Environmental Policy Act

NHTSA has analyzed this rulemaking action for the purposes of the National Environmental Policy Act. The agency has determined that implementation of this action would not have any significant impact on the quality of the human environment.

D. Executive Order 13132 (Federalism)

Executive Order 13132 requires NHTSA to develop an accountable process to ensure ''meaningful and timely input by State and local officials in the development of regulatory policies that have federalism implications.'' The Executive Order defines ''policies that have federalism implications'' to include regulations that have ''substantial direct effects on the States, on the relationship between the national government and the States, or on the distribution of power and responsibilities among the various levels of government.'' Under Executive Order 13132, NHTSA may not issue a regulation with Federalism implications, that imposes substantial direct compliance costs, and that is not required by statute, unless the Federal government provides the funds

necessary to pay the direct compliance costs incurred by State and local governments, or the agency consults with State and local officials early in the process of developing the regulation. NHTSA also may not issue a regulation with Federalism implications and that preempts State law unless the agency consults with State and local officials early in the process of developing the regulation.

NHTSA has analyzed this rulemaking action in accordance with the principles and criteria set forth in Executive Order 13132. The agency has determined that this rule will not have sufficient federalism implications to warrant consultation with State and local officials or the preparation of a federalism summary impact statement. This rule will not have any substantial effects on the States, or on the current Federal-State relationship, or on the current distribution of power and responsibilities among the various local officials. The reason is that this final rule applies to motor vehicle manufacturers, and not to the States or local governments. Thus, the requirements of Section 6 of the Executive Order do not apply.

E. Executive Order 12988 (Civil Justice Reform)

Pursuant to Executive Order 12988 ''Civil Justice Reform,'' we have considered whether this final rule would have any retroactive effect. NHTSA concludes that this final rule will not have any retroactive effect. Under 49 U.S.C. 30103, whenever a Federal motor vehicle safety standard is in effect, a State may not adopt or maintain a safety standard applicable to the same aspect of performance which is not identical to the Federal standard, except to the extent that the state requirement imposes a higher level of performance and applies only to vehicles procured for the State's use. 49 U.S.C. 30161 sets forth a procedure for judicial review of final rules establishing, amending, or revoking Federal motor vehicle safety standards. That section does not require submission of a petition for reconsideration or other administrative proceedings before parties may file suit in court.

F. Paperwork Reduction Act

Under the Paperwork Reduction Act of 1995, a person is not required to respond to a collection of information by a Federal agency unless the collection displays a valid Office of Management and Budget (OMB) control number. This final rule does not require any collections of information, or recordkeeping or retention requirements as defined by the OMB in 5 CFR Part 1320.

G. National Technology Transfer and Advancement Act

Section 12(d) of the National Technology Transfer and Advancement Act of 1995 (NTTAA), Public Law 104–113, section 12(d) (15 U.S.C. 272) directs NHTSA to use voluntary consensus standards in its regulatory activities unless doing so would be inconsistent with applicable law or otherwise impractical. Voluntary consensus standards are technical standards (*e.g.*, materials specifications, test methods, sampling procedures, and business practices) that are developed or adopted by voluntary consensus standards bodies, such as the Society of Automotive Engineers (SAE). The NTTAA directs the agency to provide Congress, through the OMB, explanations when we decide not to use available and applicable voluntary consensus standards.

After conducting a search of available sources, we have determined that there is an applicable voluntary consensus standard. That standard is the International Standards Organization's (ISO) Standard 2575:2000. We are using some of the symbols from that Standard in Table 1 and Table 2 of this final rule.

H. Unfunded Mandates Reform Act

Section 202 of the Unfunded Mandates Reform Act of 1995 (UMRA) requires Federal agencies to prepare a written assessment of the costs, benefits, and other effects of proposed or final rules that include a Federal mandate likely to result in the expenditure by State, local or tribal governments, in the aggregate, or by the private sector, of more than $100 million in any one year (adjusted for inflation with base year of 1995). Before promulgating a rule for which a written statement is needed, section 205 of the UMRA generally requires NHTSA to identify and consider a reasonable number of regulatory alternatives and adopt the least costly, most cost-effective, or least burdensome alternative that achieves the objectives of the rule. The provisions of section 205 do not apply when they are inconsistent with applicable law. Moreover, section 205 allows NHTSA to adopt an alternative other than the least costly, most cost-effective or least burdensome alternative if the agency publishes with the final rule an explanation why that alternative was not adopted.

This rule will not result in the expenditure by State, local, or tribal governments, in the aggregate, or by the private sector of more than $100 million annually. Accordingly, this rule is not subject to the requirements of sections 202 and 205 of the UMRA.

I. Plain Language

Executive Order 12866 requires each agency to write all rules in plain language. Application of the principles of plain language includes consideration of the following questions:

—Have we organized the material to suit the public's needs?

—Are the requirements in the rule clearly stated?

—Does the rule contain technical language or jargon that is not clear?

—Would a different format (grouping and order of sections, use of headings, paragraphing) make the rule easier to understand?

—Would more (but shorter) sections be better?

—Could we improve clarity by adding tables, lists, or diagrams?

—What else could we do to make this rulemaking easier to understand?

We have solicited comments on the Plain Language implications of the NPRM in the **Federal Register** document of September 23, 2003 (68 FR 55217) on p. 55225. We received no comments on the Plain Language issue.

J. Regulation Identifier Number (RIN)

The Department of Transportation assigns a regulation identifier number (RIN) to each regulatory action listed in the Unified Agenda of Federal Regulations. The Regulatory Information Service Center publishes the Unified Agenda in April and October of each year. You may use the RIN contained in the heading at the beginning of this document to find this action in the Unified Agenda.

List of Subjects in 49 CFR Part 571

Imports, Motor vehicle safety, Motor vehicles, Rubber and rubber products, and Tires.

■ In consideration of the foregoing, NHTSA amends 49 CFR part 571 as follows:

PART 571—FEDERAL MOTOR VEHICLE SAFETY STANDARDS

■ 1. The authority citation for part 571 continues to read as follows:

Authority: 49 U.S.C. 322, 30111, 30115, 30166, and 30177; delegation of authority at 49 CFR 1.50.

■ 2. Section 571.101 is revised to read as follows:

§ 571.101 Standard No. 101, Controls, telltales, and indicators.

S1. *Scope.* This standard specifies performance requirements for location, identification, color, and illumination of motor vehicle controls, telltales and indicators.

S2. *Purpose.* The purpose of this standard is to ensure the accessibility, visibility and recognition of motor vehicle controls, telltales and indicators, and to facilitate the proper selection of controls under daylight and nighttime conditions, in order to reduce the safety hazards caused by the diversion of the driver's attention from the driving task, and by mistakes in selecting controls.

S3. *Application.* This standard applies to passenger cars, multipurpose passenger vehicles, trucks, and buses.

S4. *Definitions.*

Adjacent, with respect to a control, telltale or indicator, and its identifier means:

(a) The identifier is in close proximity to the control, telltale or indicator; and

(b) No other control, telltale, indicator, identifier or source of illumination appears between the identifier and the telltale, indicator, or control that the identifier identifies.

Common space means an area on which more than one telltale, indicator, identifier, or other message may be displayed, but not simultaneously.

Control means the hand-operated part of a device that enables the driver to change the state or functioning of the vehicle or a vehicle subsystem.

Indicator means a device that shows the magnitude of the physical characteristics that the instrument is designed to sense.

Identifier means a symbol, word, or words used to identify a control, telltale, or indicator.

Multi-function control means a control through which the driver may select, and affect the operation of, more than one vehicle function.

Multi-task display means a display on which more than one message can be shown simultaneously.

Telltale means an optical signal that, when illuminated, indicates the actuation of a device, a correct or improper functioning or condition, or a failure to function.

S5. *Requirements.* Each passenger car, multipurpose passenger vehicle, truck and bus that is fitted with a control, a telltale or an indicator listed in Table 1 or Table 2 must meet the requirements of this standard for the location, identification, color, and illumination of that control, telltale or indicator. However, the requirements for telltales and indicators do not apply to vehicles with GVWRs of 4,536 kg or greater if these specified vehicles are manufactured before September 1, 2013.

S5.1 Location

S5.1.1 The controls listed in Table 1 and in Table 2 must be located so they are operable by the driver under the conditions of S5.6.2.

S5.1.2 The telltales and indicators listed in Table 1 and Table 2 and their identification must be located so that, when activated, they are visible to a driver under the conditions of S5.6.1 and S5.6.2.

S5.1.3 Except as provided in S5.1.4, the identification for controls, telltales and indicators must be placed on or adjacent to the telltale, indicator or control that it identifies.

S5.1.4 The requirement of S5.1.3 does not apply to a multi-function control, provided the multi-function control is associated with a multi-task display that:

(a) Is visible to the driver under the conditions of S5.6.1 and S5.6.2,

(b) Identifies the multi-function control with which it is associated graphically or using words,

(c) For multi-task displays with layers, identifies on the top-most layer each system for which control is possible from the associated multi-function control, including systems not otherwise regulated by this standard. Subfunctions of the available systems need not be shown on the top-most layer of the multi-task display, and

(d) Identifies the controls of Table 1 and Table 2 with the identification specified in those tables or otherwise required by this standard, whenever those are the active functions of the multi-function control. For lower levels of multi-task displays with layers, identification is permitted but not required for systems not otherwise regulated by this standard.

(e) Does not display telltales listed in Table 1 or Table 2.

S5.2 Identification

S5.2.1 Except for the Low Tire Pressure Telltale, each control, telltale and indicator that is listed in column 1 of Table 1 or Table 2 must be identified by the symbol specified for it in column 2 or the word or abbreviation specified for it in column 3 of Table 1 or Table 2. If a symbol is used, each symbol provided pursuant to this paragraph must have the proportional dimensional characteristics of the symbol as it appears in Table 1 or Table 2. The Low Tire Pressure Telltale (either the display identifying which tire has low pressure or the display which does not identify which tire has low pressure) shall be identified by the appropriate symbol designated in column 4, or both the symbol in column 4 and the words in column 3. No identification is required for any horn (*i.e.*, audible warning signal) that is activated by a lanyard or for a turn signal control that is operated in a plane essentially parallel to the face plane of the steering wheel in its normal driving position and which is located on the left side of the steering column so that it is the control on that side of the column nearest to the steering wheel face plane.

S5.2.2 Any symbol, word, or abbreviation not shown in Table 1 or Table 2 may be used to identify a control, a telltale or an indicator that is not listed in those tables.

S5.2.3 Supplementary symbols, words, or abbreviations may be used at the manufacturer's discretion in conjunction with any symbol, word, or abbreviation specified in Table 1 or Table 2.

S5.2.4 [Reserved]

S5.2.5 A single symbol, word, or abbreviation may be used to identify any combination of the control, indicator, and telltale for the same function.

S5.2.6 Except as provided in S5.2.7, all identifications of telltales, indicators and controls listed in Table 1 or Table 2 must appear to the driver to be perceptually upright. A rotating control that has an ''off'' position shall appear to the driver perceptually upright when the rotating control is in the ''off'' position.

S5.2.7 The identification of the following items need not appear to the driver to be perceptually upright:

(a) A horn control;

(b) Any control, telltale or indicator located on the steering wheel, when the steering wheel is positioned for the motor vehicle to travel in a direction other than straight forward; and

(c) Any rotating control that does not have an ''off'' position.

S5.2.8 Each control for an automatic vehicle speed system (cruise control) and each control for heating and air conditioning systems must have identification provided for each function of each such system.

S5.2.9 Each control that regulates a system function over a continuous range must have identification provided for the limits of the adjustment range of that function. If color coding is used to identify the limits of the adjustment range of a temperature function, the hot limit must be identified by the color red and the cold limit by the color blue. If the status or limit of a function is shown by a display not adjacent to the control for that function, both the control

(unless it is a multi-function control complying with S5.1.4) and the display must be independently identified as to the function of the control, in compliance with S5.2.1, on or adjacent to the control and on or adjacent to the display.

Example 1. A slide lever controls the temperature of the air in the vehicle heating system over a continuous range, from no heat to maximum heat. Since the control regulates a single function over a quantitative range, only the extreme positions require identification.

Example 2. A switch has three positions, for heat, defrost, and air conditioning. Since each position regulates a different function, each position must be identified.

S5.3 Illumination

S5.3.1 Timing of illumination

(a) Except as provided in S5.3.1(c), the identifications of controls for which the word ''Yes'' is specified in column 5 of Table 1 must be capable of being illuminated whenever the headlamps are activated. This requirement does not apply to a control located on the floor, floor console, steering wheel, steering column, or in the area of windshield header, or to a control for a heating and air-conditioning system that does not direct air upon the windshield.

(b) Except as provided in S5.3.1(c), the indicators and their identifications for which the word ''Yes'' is specified in column 5 of Table 1 must be illuminated whenever the vehicle's propulsion system and headlamps are activated.

(c) The indicators, their identifications and the identifications of controls need not be illuminated when the headlamps are being flashed or operated as daytime running lamps.

(d) At the manufacturer's option, any control, indicator, or their identifications may be capable of being illuminated at any time.

(e) A telltale must not emit light except when identifying the malfunction or vehicle condition it is designed to indicate, or during a bulb check.

S5.3.2 Brightness of illumination of controls and indicators

S5.3.2.1 Means must be provided for illuminating the indicators, identifications of indicators and identifications of controls listed in Table 1 to make them visible to the driver under daylight and nighttime driving conditions.

S5.3.2.2 The means of providing the visibility required by S5.3.2.1:

(a) Must be adjustable to provide at least two levels of brightness;

(b) At the lower level of brightness, the identification of controls and indicators must be barely discernible to the driver who has adapted to dark ambient roadway condition;

(c) May be operable manually or automatically; and

(d) May have levels of brightness at which those items and identification are not visible.

(1) If the level of brightness is adjusted by automatic means to a point where those items or their identification are not visible to the driver, means shall be provided to enable the driver to restore visibility.

S5.3.3 Brightness of telltale illumination

(a) Means must be provided for illuminating telltales and their identification sufficiently to make them visible to the driver under daylight and nighttime driving conditions.

(b) The means for providing the required visibility may be adjustable manually or automatically, except that the telltales and identification for brakes, highbeams, turn signals, and safety belts may not be adjustable under any driving condition to a level that is invisible.

S5.3.4 Brightness of interior lamps

Any source of illumination that is:

(a) Within the passenger compartment of a motor vehicle;

(b) Located in front of a transverse vertical plane 110 mm behind the H-point of the driver's seat while in its rearmost driving position;

(c) Capable of being activated while the motor vehicle is in motion; and

(d) Neither a telltale nor a source of illumination used for the controls and indicators listed in Table 1 or Table 2, must have a means for the driver to turn off that source under the conditions of S5.6.2.

S5.3.5 The provisions of S5.3.4 do not apply to buses that are normally operated with the passenger compartment illuminated.

S5.4 Color

S5.4.1 The light of each telltale listed in Table 1 must be of the color specified for that telltale in column 6 of that table.

S5.4.2 Any indicator or telltale not listed in Table 1 and any identification of that indicator or telltale must not be a color that masks the driver's ability to recognize any telltale, control, or indicator listed in Table 1.

S5.4.3 Each symbol used for the identification of a telltale, control or indicator must be in a color that stands out clearly against the background.

S5.4.4 The filled-in part of any symbol in Table 1 or Table 2 may be replaced by its outline and the outline of any symbol in Table 1 or Table 2 may be filled in.

S5.5 Common space for displaying multiple messages

S5.5.1 A common space may be used to show messages from any sources, subject to the requirements in S5.5.2 through S5.5.6.

S5.5.2 The telltales for any brake system malfunction, the air bag malfunction, the side air bag malfunction, low tire pressure, passenger air bag off, high beam, turn signal, and seat belt must not be shown in the same common space.

S5.5.3 The telltales and indicators that are listed in Table 1 and are shown in the common space must illuminate at the initiation of any underlying condition.

S5.5.4 Except as provided in S5.5.5, when the underlying conditions exist for actuation of two or more telltales, the messages must be either:

(a) Repeated automatically in sequence, or

(b) Indicated by visible means and capable of being selected for viewing by the driver under the conditions of S5.6.2.

S5.5.5 In the case of the telltale for a brake system malfunction, air bag malfunction, side air bag malfunction, low tire pressure, passenger air bag off, high beam, turn signal, or seat belt that is designed to display in a common space, that telltale must displace any other symbol or message in that common space while the underlying condition for the telltale's activation exists.

S5.5.6(a) Except as provided in S5.5.6(b), messages displayed in a common space may be cancelable automatically or by the driver.

(b) Telltales for high beams, turn signal, low tire pressure, and passenger air bag off, and telltales for which the color red is required in Table 1 must not be cancelable while the underlying condition for their activation exists.

S5.6 Conditions

S5.6.1 The driver has adapted to the ambient light roadway conditions.

S5.6.2 The driver is restrained by the seat belts installed in accordance with 49 CFR 571.208 and adjusted in accordance with the vehicle manufacturer's instructions.

BILLING CODE 4910–59–P

Table 1
Controls, Telltales, and Indicators with Illumination or Color Requirements [1]

Column 1 ITEM	Column 2 SYMBOL	Column 3 WORDS OR ABBREVIATIONS	Column 4 FUNCTION	Column 5 ILLUMINATION	Column 6 COLOR
Highbeam	[2,4]	—	Telltale	—	Blue or Green [3]
Turn signals	[2,5]	—	Control	—	—
			Telltale	—	Green [3]
Hazard warning signal	[2]	Hazard	Control	Yes	—
		—	Telltale [6]	—	—
Position, side marker, and/or end-outline marker lamps	[2] [7]	Marker Lamps or MK Lps [7]	Control	Yes	—
Windshield wiping system *(continuous)*		Wiper or Wipe	Control	Yes	—
Windshield washing system		Washer or Wash	Control	Yes	—
Windshield washing and wiping system combined		Washer-Wiper or Wash-Wipe	Control	Yes	—
Windshield defrosting and defogging system		Defrost, Defog or Def.	Control	Yes	—
Rear window defrosting and defogging system		Rear Defrost, Rear Defog, Rear Def., or R-Def.	Control	Yes	—

Table 1
Controls, Telltales, and Indicators with Illumination or Color Requirements [1]

Column 1 ITEM	Column 2 SYMBOL	Column 3 WORDS OR ABBRE-VIATIONS	Column 4 FUNCTION	Column 5 ILLUMIN-ATION	Column 6 COLOR
Brake system malfunction may include Stop Lamp failure	—	Brake	Telltale	—	Red[3]
Antilock brake system malfunction for vehicles subject to FMVSS 105 or 135	—	Antilock, Anti-lock, or ABS [8]	Telltale	—	Yellow
Malfunction in Variable Brake Proportioning System	—	Brake Proportioning [8]	Telltale	—	Yellow
Regenerative brake system malfunction	—	RBS or ABS/RBS [8]	Telltale	—	Yellow
Malfunction in antilock system for vehicles other than trailers subject to FMVSS 121	—	ABS or Antilock [8]	Telltale	—	Yellow
Antilock brake system trailer fault for vehicles subject to FMVSS 121	—	Trailer ABS or Trailer Antilock	Telltale	—	Yellow
Brake Pressure (for vehicles subject to FMVSS 105 or 135)	—	Brake Pressure [8]	Telltale	—	Red[3]
Low brake fluid condition (for vehicles subject to FMVSS 105 or 135)	—	Brake Fluid [8]	Telltale	—	Red[3]
Parking brake applied (for vehicles subject to FMVSS 105 or 135)	—	Park or Parking Brake [8]	Telltale	—	Red[3]
Brake lining wear-out condition (for vehicles subject to FMVSS 105 or 135)	—	Brake Wear [8]	Telltale	—	Red
Fuel level	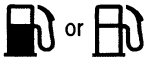	Fuel	Telltale	—	—
			Indicator	Yes	—

Table 1
Controls, Telltales, and Indicators with Illumination or Color Requirements

Column 1 ITEM	Column 2 SYMBOL	Column 3 WORDS OR ABBREVIATIONS	Column 4 FUNCTION	Column 5 ILLUMINATION	Column 6 COLOR
Engine oil pressure	9	Oil	Telltale	—	—
			Indicator	Yes	—
Engine coolant temperature	9	Temp	Telltale	—	—
			Indicator	Yes	—
Electrical charge	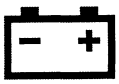	Volts or Charge or Amp	Telltale	—	—
			Indicator	Yes	—
Engine stop	—	Engine Stop 10	Control	Yes	—
Automatic vehicle speed (cruise control)	—	—	Control	Yes	—
Speedometer	—	MPH, or MPH and km/h 11	Indicator	Yes	—
Heating and Air conditioning system	—	—	Control	Yes	—
Automatic transmission control position *(park)* *(reverse)* *(neutral)* *(drive)*	—	P R N D 12	Indicator	Yes	—
Heating and/or air conditioning fan	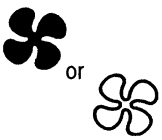	Fan	Control	Yes	—
Low Tire Pressure (including malfunction) (See FMVSS 138)	13	Low Tire 13	Telltale	—	Yellow

Table 1
Controls, Telltales, and Indicators with Illumination or Color Requirements [1]

Column 1 ITEM	Column 2 SYMBOL	Column 3 WORDS OR ABBRE-VIATIONS	Column 4 FUNCTION	Column 5 ILLUMIN-ATION	Column 6 COLOR
Low Tire Pressure (including malfunction) that identifies involved tire (See FMVSS 138)	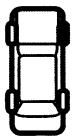 [13]	Low Tire [13]	Telltale	—	Yellow
Tire Pressure Monitoring System Malfunction (See FMVSS 138) [14]	—	TPMS [13, 15]	Telltale	—	Yellow

Notes:

1. An identifier is shown in this table if it is required for a control for which an illumination requirement exists or if it is used for a telltale for which a color requirement exists. If a line appears in column 2 and column 3, the control, telltale or indicator is required to be identified, however the form of the identification is the manufacturer's option. Telltales are not considered to have an illumination requirement, because by definition the telltale must light when the condition for its activation exists.
2. Framed areas of the symbol may be solid; solid areas may be framed.
3. Blue may be blue-green. Red may be red-orange.
4. Symbols employing four lines instead of five may also be used.
5. The pair of arrows is a single symbol. When the controls or telltales for left and right turn operate independently, however, the two arrows may be considered separate symbols and be spaced accordingly.
6. Not required when arrows of turn signal telltales that otherwise operate independently flash simultaneously as hazard warning telltale.
7. Separate identification not required if function is combined with master lighting switch.
8. Refer to FMVSS 105 or FMVSS 135, as appropriate, for additional specific requirements for brake telltale labeling and color. If a single telltale is used to indicate more than one brake system condition, the brake system malfunction identifier must be used.
9. Combination of the engine oil pressure symbol and the engine coolant temperature symbol in a single telltale is permitted.
10. Use when engine control is separate from the key locking system.
11. If the speedometer is graduated in miles per hour and in kilometers per hour, the identification must be "MPH and km/h" in any combination of upper and lowercase letters.
12. Letter "D" may be replaced by other alphanumeric character or symbol chosen by the manufacturer. The indicators may be displayed top to bottom, or left to right, or both.
13. Required only for FMVSS compliant vehicles.
14. Alternatively, either low tire pressure telltale may be used to indicate a TPMS malfunction. See FMVSS 138.
15. Required only for vehicles manufactured on or after September 1, 2007.

Table 2
Identifiers for
Controls, Telltales and Indicators with
No Color or Illumination Requirements

Column 1 ITEM	Column 2 SYMBOL	Column 3 WORD(S) OR ABBREVIATION
Hand Throttle Control	—	Throttle
Engine Start Control	—	Engine Start[1]
Manual Choke Control	—	Choke
Odometer	—	Kilometers or km, if kilometers are shown. Otherwise, no identifier is required.
Horn		Horn
Master Lighting Switch	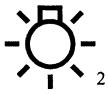 [2]	Lights
Headlamps and Taillamps Control	—	— [3,4]
Low Brake Air Pressure Telltale (for vehicles subject to FMVSS 121)	—	Brake Air
Seat Belt Unfastened Telltale	or	Fasten Belts or Fasten Seat Belts

Notes:

1. Use when engine control is separate from the key locking system.
2. Framed areas may be filled.
3. If a line appears in Column 2 and Column 3, the Control, Telltale or Indicator is required to be identified, however the form of the identification is the manufacturer's option.
4. Separate identification not required if function is combined with Master Lighting Switch.

Issued on: August 11, 2005.

Jacqueline Glassman,

Deputy Administrator.

[FR Doc. 05–16325 Filed 8–16–05; 8:45 am]

BILLING CODE 4910–59–C

DEPARTMENT OF TRANSPORTATION

National Highway Traffic Safety Administration

49 CFR Part 571

[Docket No. NHTSA–05–22116]

RIN 2127–AJ12

Federal Motor Vehicle Safety Standards; Low Speed Vehicles

AGENCY: National Highway Traffic Safety Administration (NHTSA), Department of Transportation (DOT).

ACTION: Final rule.

SUMMARY: This final rule amends the definition of ''low-speed vehicle'' (LSV) in two ways. First, it eliminates the exclusion of trucks from that class of vehicles. Second, it limits the class of LSVs to those vehicles with a Gross Vehicle Weight Rating (GVWR) of less than 1,134 kilograms (2,500 pound).

DATES: *Effective Date:* This rule becomes effective October 3, 2005.

Petitions: If you wish to submit a petition for reconsideration of this rule, your petition must be received by October 3, 2005.

ADDRESSES: Petitions for reconsideration should refer to the docket number above and be submitted to: Administrator, Room 5220, National Highway Traffic Safety Administration, 400 Seventh Street, SW., Washington, DC 20590.

FOR FURTHER INFORMATION CONTACT: The following persons at the National Highway Traffic Safety Administration, 400 Seventh Street, SW., Washington, DC 20590.

For technical and policy issues: Ms. Gayle Dalrymple, Office of Crash Avoidance Standards, NVS–123 (Telephone: 202–366–5559) (Fax: 202–493–2739).

For legal issues: Mr. Christopher Calamita, Office of the Chief Counsel (Telephone: 202–366–2992) (Fax: 202–366–3820).

SUPPLEMENTARY INFORMATION:

Table of Contents

I. Background
II. Summary of the Notice of Proposed Rulemaking
III. Public Comments
IV. The Final Rule and Response to Public Comments
A. The Final Rule
1. 2,500 pound GVWR
2. The 80-pound RCL limitation
B. Miscellaneous Comments
V. Regulatory Analyses and Notices

I. Background

On June 17, 1998, the National Highway Traffic Safety Administration (NHTSA) published a final rule establishing a new Federal Motor Vehicle Safety Standard (FMVSS) No. 500, ''Low-speed vehicles,'' and added a definition of ''low-speed vehicle'' (LSV) to 49 CFR 571.3 (63 FR 33194). This new FMVSS and vehicle class definition responded to the growing public interest in using golf cars and other similarly sized small vehicles to make short trips for shopping, social, and recreational purposes primarily within retirement or other planned, self-contained communities. These vehicles, many of which are electric-powered, offer comparatively low-cost, energy-efficient, low-emission, quiet transportation.[1] The current definition of LSV is ''a 4-wheeled motor vehicle, other than a truck, whose speed attainable in 1.6km (1 mile) is more than 32 kilometers per hour (20 miles per hour) and not more than 40 kilometers per hour (25 miles per hour) on a paved level surface.''

When we first proposed and established FMVSS No. 500, we stated that we envisioned the LSV as a small, lightweight vehicle that could not meet FMVSSs appropriate for larger and heavier vehicles.[2] As originally proposed in January 1997, trucks were not excluded from the definition of LSV. We proposed the ''creation of a new class of vehicle * * * with a definitional criterion of speed alone.'' However, low-speed vehicles with ''work performing features'' (such as a street sweeper) would have been excluded under the 1997 proposed definition. After considering the comments, we limited LSVs to vehicles other than trucks. Not excluding trucks from the LSV definition would have had the unintended result of rendering some vehicles that already met FMVSSs subject to neither those standards nor even the minimum limitations applicable to LSVs.

We have encouraged states to be very careful when contemplating the use of LSVs on public roads. A LSV does not have the occupant protection capability of other four-wheeled motor vehicles. Its lightness makes its occupants vulnerable in any collision with a non-LSV vehicle. The force involved in such a collision increases proportional to the square of the velocity of travel. For example, the result of a vehicle collision at 35 miles per hour (mph) is twice as severe as the same collision at 25 mph.

We continue to anticipate that LSV use on roads outside confined, controlled areas will be limited by the maximum speed capability of LSVs. We expect that occupants will not want to travel at less than 25 mph in mixed-vehicle traffic for other than very short trips, regardless of the extent to which states permit LSV use.

Since the publication of the final rule in 1998, we have received two petitions regarding the exclusion of trucks from the definition of LSV. The first was a petition for reconsideration of the final rule by Solectria (seconded by Electric Transportation Coalition) asking us to reconsider the exclusion of trucks from the definition of LSV because Solectria manufactures a micro electric pickup truck. Solectria said its truck was ''suitable'' for many uses off the public roads, such as airports, college properties, and parks. Solectria asked that we amend the definition of LSV to exclude only trucks with a curb weight greater than 2,200 pounds.

In our response to Solectria's petition for reconsideration (65 FR 53219; Sept. 1, 2000), we reiterated the discussion from the preamble to the final rule that we believed excluding trucks from Standard 500 ''ensures that such trucks must continue to meet the Federal standards that have always applied to trucks with a maximum speed of more than 20 miles per hour'' and that we believed the decision to be ''consistent with the rationale of this rulemaking, which is to eliminate a regulatory conflict involving passenger-carrying vehicles.'' We noted that FMVSSs applicable to trucks with a maximum speed between 20 and 25 mph had not inhibited the introduction of such trucks in the past. However, we also stated,

> We are still considering this petition, and have not reached a decision whether to grant or to deny it. Our decision will be reflected in the notice of proposed rulemaking under consideration for establishing performance requirements for safety equipment on LSVs.

Subsequently, in January 2002, the agency received a petition regarding the LSV definition from Global Electric Motorcars (GEM), a DaimlerChrysler company. GEM asked that NHTSA change the definition of LSV, ''to include 'trucks' or vehicles designed primarily for the transportation of property or special purpose equipment, so long as they meet the existing vehicle speed limitations of the definition.'' GEM noted that the NPRM stated ''LSVs would include all motor vehicles, other than motorcycles * * * whose speed

[1] Electric LSVs are commonly referred to as Neighborhood Electric Vehicles (NEVs). However, NEVs are not specifically defined in the Federal motor vehicle safety standards.

[2] See the notice of proposed rulemaking (62 FR 1077, January 8, 1997), final rule (63 FR 33194, June 17, 1998), response to petitions for reconsideration of the final rule (65 FR 53219, September 1, 2000), and letters of interpretation of the definition of LSV.

* * * does not exceed 25 mph,'' and that the agency had recognized, ''that there is no reasonable justification for subjecting low-speed vehicles like golf carts * * * to the full range of safety standards that apply to heavier, faster vehicles.''

As a result of the petitions received from GEM and Solectria, the agency decided to reconsider the LSV definition. In a notice of proposed rulemaking (NPRM) published on December 8, 2003 (68 FR 68319), we granted the petitions by GEM and Solectria, and tentatively agreed with the petitioners that the current exclusion of trucks from the LSV definition is too broad and does not fully reflect current interpretations of that definition.[3] In the NPRM, we proposed to drop the exclusion of trucks from the definition and otherwise revise our definition of a LSV.

II. Summary of the Notice of Proposed Rulemaking

In the NPRM, we proposed to revise the definition of LSV by (1) eliminating the ''other than truck'' text from the definition, (2) limiting a LSV's GVWR to less than 1,134 kilograms (2,500 pounds), and (3) requiring that a LSV have a rated cargo load of at least 36 kilograms (80 pounds).

The current definition of LSV is:

> [A] 4-wheeled motor vehicle, other than a truck, whose speed attainable in 1.6 km (1 mile) is more than 32 kilometers per hour (20 miles per hour) and not more than 40 kilometers per hour (25 miles per hour) on a paved level surface.

49 CFR 571.3(b). The agency proposed the following definition:

> *Low-speed vehicle* means
> (a) a 4-wheeled motor vehicle,
> (b) whose speed attainable in 1.6 km (1 mile) is more than 32 kilometers per hour (20 miles per hour) and not more than 40 kilometers per hour (25 miles per hour) on a paved level surface,
> (c) whose rated cargo load is at least 36 kilograms (80 pounds), and
> (d) whose GVWR is less than 1,134 kilograms (2,500 pounds).

The proposed definition reflected our tentative determination that there is no reasonable basis to differentiate between passenger and cargo-carrying vehicles in the definition of LSVs. At the same time, the proposed definition would be more complete and would better communicate the concept that NHTSA has always expressed: LSVs are a class of vehicles for which the FMVSS for larger vehicles are inappropriate because of the small size of the vehicles in this class.[4]

In tentatively deciding to remove the exclusion of trucks from the definition of LSV, we concluded that it would be necessary to replace that limitation with an alternative limitation of what could be considered a LSV. We proposed adding a maximum GVWR limitation to the LSV definition. In the NPRM, we stated that using GVWR would be an appropriate and objective way to define LSV for several reasons. First, it would prevent attempts to circumvent the FMVSSs for cars, trucks, and multipurpose passenger vehicles by seeking to apply the LSV classification to vehicle types that are able to meet the standards. Second, GVWR would provide a means to distinguish between vehicles that the agency envisions as LSVs and traditional small vehicles that are currently certified to meet all applicable FMVSSs (*e.g.*, Toyota Echo, Ford Focus, and Chevrolet Tracker). Third, it would enable the agency to continue to exclude from the LSV definition all heavier, slow-moving trucks (*e.g.*, street cleaners) that are able to meet all FMVSSs applicable to trucks. Under the LSV revisions as proposed in the NPRM, these heavier, slow-moving trucks would still be required to meet all of the FMVSSs applicable to trucks.

In proposing to add a GVWR limitation to the definition of LSV, we needed to determine the appropriate maximum GVWR for LSV vehicles. We proposed a GVWR of ''less than 2,500 pounds.'' We stated that this proposed ''less than 2,500 pound'' GVWR limitation for LSVs was the result of our identification of vehicles constituting a class of motor vehicles so small that they are generally unable to meet all of the FMVSSs required for passenger cars, multipurpose vehicles, and trucks. The NPRM provided a detailed comparison of vehicles less than 2,500 pounds (*e.g.*, GEM E825 Short Bed Utility and Ford Th!nk Neighbor) to vehicles 2,500 pounds or greater, which are capable of meeting all of the applicable FMVSSs (*e.g.*, Toyota Echo, Ford Focus, and Chevrolet Tracker). The ''less than 2,500 pound'' GVWR limitation was also proposed based on existing LSVs, GVWR submitted by companies registering with NHTSA as intending to manufacture LSVs, and the Society of Automotive Engineers Surface Vehicle Standard J–2358.

In the NPRM, we noted that the ''less than 2,500 pound'' GVWR limitation would include some vehicles that are currently certified to the FMVSSs, such as the Honda Insight. Such a vehicle would, of course, not be considered a LSV unless it also met the other limitations specified in the LSV definition (*e.g.*, a maximum attainable speed of 25 mph). We proposed the ''less than 2,500 pound'' GVWR limitation to accommodate electric LSVs, which are heavier than internal combustion engine models. The increased weight of electric LSVs can be attributed to their heavier electric propulsion systems and their need for battery storage. The agency did not propose a LSV definition with maximum GVWR greater than 2,500 pounds, in part, because there are currently not any performance requirements for service brakes and tires that are appropriate for these vehicles.

In addition, we proposed an additional limitation of a minimum rated cargo load (RCL) of 80 pounds. The proposed RCL minimum was intended to ensure some load carrying capacity in addition to the regulatory requirement of 150 pounds per designated seating position (as defined in 49 CFR 571.3).

We proposed the LSV definition changes because we believed they would make the definition more complete, clarify the definition as to the type of vehicle NHTSA intended to exclude from the FMVSSs for cars, trucks and multipurpose passenger vehicles under the LSV definition, and allow manufacturers of LSVs more flexibility in the design of their products without sacrificing the safety of the vehicles' users. Further, the crash avoidance and crash protection requirements for a LSV are appropriate for that vehicle's size and anticipated usage, regardless of whether the vehicle is designed to transport passengers or cargo.

III. Public Comments

We received sixteen comments on the NPRM.[5] Comments were received from

[3] Docket No. NHTSA–03–16601.

[4] NHTSA has consistently stated that the main reason for excluding LSVs from compliance from other FMVSSs was that requiring such compliance was inappropriate for these small, lightweight vehicles. We noted that a separate class for LSVs was appropriate based on its low operating speed, and limited areas of use—most notably in planned environments, such as retirement communities. Further, these vehicles could not meet FMVSSs more appropriate for larger, heavier vehicles, such as the 30 m.p.h. barrier crash standards.

[5] Comments were submitted by: (1) National Golf Car Manufacturers Association (NGCMA); (2) Electric Drive Transportation Association (EDTA); (3) Mr. Walter W. Harsch; (4) Harley Holt & Associates; (5) C.C. Chan; (6) Ms. Lauren Brooks; (7) Voltage Vehicles; (8) ZAP; (9) ZAP Latin America, S.A.; (10) Advocates for Highway and Auto Safety (Advocates); (11) Tiger Truck, L.L.C.; (12) California Manufacture of Electric Vehicle (CAMEV); (13) The Honorable Lynn Woolsey, Member of Congress; (14) Mr. Alex Campbell; (15) DaimlerChrysler (parent

LSV manufacturers, LSV distributors, an industry organization representing golf cart manufactures, public interest groups, individual members of the public, and a member of Congress.

A few commenters expressed concern about expanding the definition by removing the truck exclusion. However, a majority of commenters supported the removal of this exclusion, while expressing concern with and opposition to the proposed GVWR and RCL limits. Comments regarding the proposed limits generally found the limits to be too restrictive.

IV. The Final Rule and Response to Public Comments

A. The Final Rule

Today's document establishes the definition of LSV as proposed in the December 2003 NPRM, except that we are not specifying a minimum RCL. The definition of LSV is revised as follows:

Low-speed vehicle means a vehicle,
(a) that is 4-wheeled,
(b) whose speed attainable in 1.6 km (1 mile) is more than 32 kilometers per hour (20 miles per hour) and not more than 40 kilometers per hour (25 miles per hour) on a paved level surface, and
(c) whose GVWR is less than 1,134 kilograms (2,500 pounds).

This definition eliminates the exclusion of trucks from the LSV definition. A vehicle equipped with a cargo bed or other form of cargo carrying capacity may now be classified as a LSV, so long as the vehicle complies with the other provisions of the definition.

The definition established in today's document better expresses our concept of ''LSV.'' As previously expressed, ''LSV'' is intended to comprise a class of vehicles for which the FMVSSs for cars, trucks, and multi-purpose vehicles are inappropriate because of the small size of these vehicles. Today's definition defines the limits of that size and permits the manufacture of LSVs designed for a more utilitarian function through the incorporation of greater cargo carrying capacity. LSVs with greater cargo carrying capacity offer a flexible and economical alternative to trucks in the appropriate environments, such as gated and retirement communities. The application of the full range of FMVSSs to which cars, trucks, and multipurpose passenger vehicles are subject, is equally inappropriate to these small, lightweight vehicles, whether they are designed to carry primarily passengers or property.

company of petitioner GEM); and (16) Donahue Gallagher Woods, L.L.P. (Donahue).

Two commenters, NGCMA and Advocates, opposed removing the truck exclusion from the definition of LSV. NGCMA asserted that NHTSA failed to consider numerous industry standards concerning LSV performance and safety (specifically standards SAE J–2358, ISO 391–6:2003, and ASME 56.8) and that the agency should consider all of the ramifications inherent in industrial truck function and performance (*e.g.*, existing truck FMVSSs, fuel and battery acid containment, brake performance criteria, reverse warning signal horns). NGCMA also argued that including trucks in the LSV classification will have the unintended anti-competitive effect of replacing currently available off-road light utility vehicles (with an operating speed of less than 20 mph) with LSV trucks, which may offer tax advantages. Finally, NGCMA argued that one vehicle, the Frazer-Nash 4XLSV NEV would be excluded from the definition of LSV because it has a GVWR of 3,304 lbs.[6]

We have carefully considered NGCMA's comments. We note that we have considered industry standards related to LSVs and specifically mentioned SAE J–2358 in the NPRM. Further, because of the limited speed and intended environment of operation, we have determined that the full range of standards applicable to trucks is not applicable to ''truck-like'' LSVs, *i.e.*, those designed with greater cargo carrying capacity.

Removal of the truck exclusion from the definition of LSV will permit vehicles with a maximum speed between 20 and 25 mph that are manufactured primarily to transport property to be manufactured as motor vehicles. These vehicles will also be manufactured primarily for use on public roads. The vehicles discussed by NGCMA that have maximum speed capabilities below 20 mph are off-road vehicles, *i.e.*, vehicles not manufactured for use on public roads. The off-road vehicles and the ''truck-like'' LSVs are manufactured for two different operating environments. Therefore, we do not anticipate that these vehicles will be in direct competition in the marketplace. We have also considered the economic impacts as required under the Regulatory Flexibility Act, discussed in greater detail below.

We also note that the Frazer-Nash 4XLSV mentioned in NGCMA's comments is equipped with a cargo bed. While the vehicle would not be considered a LSV under the new definition because it exceeds the ''less than 2,500 pound'' GVWR limitation, it would also not have been considered an LSV under the previous definition because of the cargo bed.

Advocates generally opposed removing the truck exception. Advocates stated that that this rulemaking will expose many people to unnecessary risks of injuries and death because their use of LSVs that fail to conform to basic Federal safety standards for occupant protection. Advocates argued that this rule will expand the types and variety of LSVs thereby guaranteeing that even more LSVs will operate on public roads without benefit of major advances in federally regulated safety equipment and occupant crashworthiness. Advocates also argued that LSV trucks operating with speeds as high as 25 mph will result in more severe crashes, all other things being equal, because of the increased mass of these larger LSVs when they collide, especially with roadside fixed objects.

Advocates did not provide an estimate of the increase in LSVs operated on public roads (and occupants exposed) that will result from this final rule. Although we are including vehicles with greater cargo carrying capacity in the definition of LSV, we are also limiting the definition through establishing a maximum GVWR. The limitations on GVWR limitation in combination with the existing maximum speed limit of 25 mph will generally act to restrict the use of these vehicles to the appropriate environments. Given these limitations, we do not expect that operators of these vehicles will drive them in mixed-vehicle traffic for other than very short trips.

Advocates also argued that the rule would result in more severe crashes because of the 25 mph speed limitation and increased LSV mass. We did not propose to change the speed limitation in this rulemaking. As to mass, the GVWR limitation will prevent larger, heavier trucks from being classified as LSVs. Instead, truck LSVs will be similar to current LSVs.

1. 2,500 Pound GVWR

Limiting LSVs to a GVWR of ''less than 2,500 pounds'' is consistent with the safety and practicability concerns that originally gave rise to the LSV class. When we created this vehicle class, we did so in response to the growing use of LSVs on roads in planned environments, such as retirement and gated communities. To strike an appropriate balance between competing

[6] The Frazer-Nash was mentioned in a comparison table in the NPRM. We understand NGCMA's comment to argue that the Frazer-Nash would have been considered a LSV under our old definition, but not our new definition.

considerations such as safety, practicability and mobility, we sought then and continue to seek now to define the LSV class narrowly in recognition of the LSV's low operating speed and its limited use on roads in planned communities.

By removing the truck exclusion we recognize that the LSV requirements are applicable to some vehicles designed for more work-related operation. Manufacturers and the public are provided the advantages of LSVs that may be designed primarily to carry cargo. By limiting the GVWR, vehicles for which the LSV requirements are not appropriate are excluded from the LSV definition, *i.e.,* vehicles designed for use outside of planned communities or that could be designed to meet the FMVSS requirements for cars, trucks, and multi-purpose vehicles.

The GVWR limit prevents attempts to circumvent FMVSSs for cars, trucks, and multi-purpose passenger vehicles by applying the LSV classification to vehicle types that are able to meet the standards. Defining a LSV as having a maximum GVWR of less than 2,500 pounds also provides an objective means for delineating between the vehicles for which the LSV requirements are appropriate and those vehicles that can be designed to meet the full set of FMVSSs. This approach will also ensure that heavier, slow moving trucks (*i.e.,* street sweepers) continue to be excluded from the LSV definition.

A variety of commenters, *i.e.,* DaimlerChrysler, ZAP, ZAP Latin America, Voltage Vehicles, C.C. Chan, Donahue, Ms. Lauren Brooks, EDTA, Harley Holt, Mr. Alex Campbell, CAMEV, and Representative Lynn Woolsey, expressed concern with or objected to setting the GVWR limit at 2,500 pounds. Concern was raised specifically with regard to the limits impact on the utility of electrically powered LSVs, the impact on the LSV industry, and on LSVs designed to accommodate individuals with disabilities.

ZAP Latin America, ZAP, C.C. Chan, and EDTA commented that limiting the GVWR to less than 2,500 would limit the range of an electrically powered LSV (arguing that the GVWR limit would result in reducing the number or size of the batteries in these vehicles) and limit the ability of manufacturers to equip these vehicles with amenities. ZAP and CAMEV requested that NHTSA consider a higher GVWR limit. ZAP and C.C. Chan argued that a higher GVWR limitation would allow for market demands for increased range (resulting in heavier vehicles due to battery weight) and solid doors, windows, heating and air conditioning, and advanced hybrid systems.

CAMEV argued that the ''less than 2,500 pound'' GVWR limitation, as proposed, would cut the driving range of an electric powered vehicle from 35 miles to 22 miles, as a result of having to reduce the weight for battery capacity from 800 pounds to 625 pounds. This decreased range, it argued, would have the effect of limiting applications of LSVs.

Donahue, Mr. Alex Campbell, Representative Lynn Woolsey, C.C. Chan, and Harley Holt argued that the ''less than 2,500 pound'' GVWR provision of the LSV definition would significantly impact or materially harm the LSV industry. Concern was raised regarding the impact of the proposed rule existing companies, particularly, ZAP, Voltage Vehicles of Windsor California, and RAP of Windsor California, as well as on the most widely accepted existing LSVs.

As stated above, we are adopting the 2,500 pound GVWR limit in the definition of LSV to provide the appropriate balance between the intended function of these vehicles and safety. Again, the LSV class was established to recognize vehicles manufactured for operation in limited, and typically closed environments. The LSV class is not intended to include vehicles manufactured for operation in mixed traffic. A maximum GVWR of less than 2,500 pounds will enable LSV manufacturers to design a LSV with sufficient range and amenities, suitable for operating in these communities.

Given that vehicles fully compliant with FMVSS exist under 2,500 lbs and that the LSV class was created for vehicles that were too small to meet the FMVSS, there is no reason for vehicles over 2,500 lbs not be fully FMVSS compliant, and thus a great deal safer than a 2,500 lb GVWR LSV.

As noted in the 1998 final rule, the operation of LSVs in an environment with heavier, faster moving vehicles raises obvious safety concerns. Because LSVs are much lighter than conventional vehicles and are not subject to the same Federal motor vehicle safety standards, they are less crashworthy than conventional vehicles. Thus, LSV drivers, especially those unused to the limited acceleration capabilities of LSVs, and passengers will be exposed to a greater risk of injury or death when operating an LSV on roadways with a posted speed limit of 35 mph, or when attempting to cross a roadway with a posted speed limit greater than 35 mph.

We believe that, as LSVs become equipped with additional amenities, such as air conditioning, solid doors, and batteries for extended range, they lose the basic characteristics of a special vehicle designed for transportation within a planned, limited environment. Instead, these vehicles take-on the profile of a small, traditional passenger car vehicle, and in some cases, may be marketed as a small passenger car or as a substitute for a small passenger car. Even with a 25 mph speed limitation, we are concerned that LSVs that have characteristics and attributes of traditional passenger cars will be more likely to be used outside of planned communities and instead, more regularly mix with traffic. We currently require small vehicles, such as the Honda Insight, to be fully compliant with all FMVSSs. We do not believe that it is in the interests of safety to make an exception from our normal FMVSS standards for such vehicles. Moreover, there is no reason why vehicle with a GVWR greater than 2,500 pounds cannot be designed to comply with all the safety standards applicable to traditional passenger cars.

While the EDTA agreed that the GVWR provided an appropriate method for restricting the size of LSVs, it commented that the 2,500 pound limit is overly restrictive and would reduce the flexibility to develop new products in the future with different propulsion configurations or additional features. EDTA stated that the proposed GVWR does not take into consideration the increased weight associated with additional features necessary to comply with revised safety requirements or performance standards.

DaimlerChrysler noted that its vehicles are powered by an electric propulsion system, which adds 300 pounds to a comparably equipped internal combustion engine LSV. As such, DaimlerChrysler recommended a two-tiered GVWR maximum for the definition of a LSV: a 2,500-pound GVWR limitation for internal combustion LSVs, and a 2,800-pound limitation GVWR for electric powered LSVs. DaimlerChrysler argued that this would allow it to present customers with a choice between internal combustion and electric propulsion systems for vehicles carrying the same payload. ZAP Latin America was also concerned that the GVWR limitation would diminish its ability to compete with internal combustion automobiles (since internal combustion automobiles are likely to have a greater range than electric LSVs).

The LSV definition does not specify a propulsion system. A LSV may be

powered by an electrical motor, an internal combustion (IC) engine, or some other type of propulsion system. Each propulsion type has its own advantages. The advantage of the lighter weight of IC propulsion is an advantage that already exists. However, DaimlerChrysler noted that the majority of LSVs are electric. Mr. Walter Harsch commented that it is not the ''norm'' for ''working'' vehicles to be electric, but he anticipates the trend to move toward electric vehicles.

The fact that electric LSVs are successful in the market indicates that any advantage of the IC vehicle due to greater load capacity under our GVWR restriction will be overcome by other attractions of the electric vehicle to consumers. Therefore, it does not appear that this final rule creates a new disadvantage for electric vehicles. While IC vehicles are able to carry more weight, since they do not need batteries, this advantage seems to be countered by consumers' preference for electric-powered vehicles.

Further, we considered the amount of weight necessary for battery reserve in electric vehicles when we proposed our ''less than 2,500 pound'' GVWR limitation. The intent of the LSV definition is to recognize a class of vehicles for which the full range of safety standards applicable to cars, trucks, and multipurpose passenger vehicles is not appropriate because of the LSVs' small size and limited use. We found that the lightest fully FMVSS compliant vehicle is about 2100 pounds GVWR. By setting the LSV maximum GVWR at 2500 pounds we have allowed 400 lbs for batteries for electric propulsion.

ZAP Latin America, Ms. Lauren Brooks, and C.C. Chan argued that a safety-based approach should include heavier LSVs in the definition because heavier LSVs are safer or because LSVs are made heavier for safety purposes. For example, ZAP Latin America commented that it makes a heavier LSV for safety purposes. Lauren Brooks and C.C. Chan stated that lighter vehicles have a much higher risk of a fatal crash (citing DOT HS 662 Vehicle Weight, Fatality and Crash Compatibility of Model Year 1991–99 Passenger Cars and Light Trucks). C.C. Chan commented that passengers would be safer behind a solid door rather than being in open air, and that the current weight would limit the ability for these vehicles to have solid doors and windows, making them less safe.

In a crash with a traditional, heavier vehicle, a LSV would be at a disadvantage. This is why we believe that the use of LSVs should be restricted to planned communities. The commenters cited our study on Vehicle Weight, Fatality and Crash Compatibility of Model Year 1991–99 Passenger Cars and Light Trucks. This study involved vehicles that fully comply with all of our FMVSSs for passenger cars and trucks. The study did not involve LSVs.

As we stated above, heavier vehicles (*i.e.*, vehicles over 2,500 pounds GVWR) that take-on the profile of a small car, and contain solid doors, air conditioning systems, and batteries for extended range, are more likely to be used on roads outside of neighborhoods and planned communities. We do not believe that it is appropriate to encourage such use. These heavier vehicles can instead be designed to meet the full set of FMVSSs. Therefore, we believe that the ''less than 2,500 pound'' GVWR restriction helps to ensure that the vehicles will be limited in the geographic scope of their use, as NHTSA originally intended, thereby reducing the risk to occupants from mixing with other vehicles.

We believe that ''less than 2,500 pounds'' GVWR is adequate for a LSV that operates in planned communities. We also believe that increasing the maximum GVWR for a LSV would be inconsistent with the interests of safety, as discussed above. Finally, we believe that as a vehicle becomes heavier and increasingly resembles a small vehicle, by having features such as doors, it is more likely that the vehicle will be mixed with heavier vehicles, and can and should meet the full range of FMVSSs.

Voltage Vehicles and Donahue both commented that limiting the weight of the LSV would limit the ability of manufacturers to offer LSVs to accommodate people with disabilities. Voltage Vehicles stated that it has been working to develop a wheelchair accessible version of the ZAP World Car. Voltage Vehicles stated that its current modifications would add as much as 200 to 350 pounds to the GVWR of the vehicle, which already has a GVWR of approximately 3,000 pounds.

We note that the vehicles described by Voltage Vehicles would exceed the GVWR limit established in this final rule prior to the modifications for accommodating people with disabilities. We also note that existing LSV can be modified to accommodate individuals with disabilities while maintaining a GVWR below 2,500 pounds. Braun Corporation modifies the GEM LSV with a turning seat and a hoist for a wheelchair or scooter. The GEM eL, which is a LSV that is accessible to occupants with mobility impairments, has a GVWR of 2,300 pounds. It could easily accommodate a heavy power wheelchair and still have capacity for the occupant, another passenger, and special equipment.

The agency also received a comment from Mr. Walter Harsch requesting that LSVs be limited according to ''curb weight'' as opposed to GVWR. However, curb weight describes only the weight of the vehicle and not its capacity. GVWR is a description of the maximum possible weight of the fully loaded vehicle. GVWR is more pertinent to safety.

The agency has determined that a GVWR limit of 2,500 pounds in conjunction with the 25 mph speed limitation, provides a more appropriate definition for a LSV. We believe that GVWR is necessary to limit this class of vehicle to vehicles that are used in planned communities and cannot be designed to meet the full set of FMVSSs. Also, we stated in the original final rule and the NPRM to this rulemaking, we did not intend for heavier, slow-moving vehicles (*e.g.*, street sweepers), or vehicles that can be designed to meet the full set of FMVSSs, to be included in the LSV class.

2. The 80-Pound RCL Limitation

The agency is not adopting the minimum RCL requirement as proposed. The proposed minimum RCL was intended to address safety concerns regarding the overloading of vehicles. In its comments DaimlerChrysler agreed with our proposal. Although the proposed RCL limit was a minimum, ZAP argued that LSVs are used for many purposes, some of which are for cargo loads that may exceed 80 pounds. Harley Holt commented that the selection of an 80-pound minimum rated cargo load simply because it is the estimated weight of two golf bags is inappropriate when applied to LSVs that would be sold and used to transport property. Harley Holt suggested that there be no minimum value specified for rated cargo load.

We have carefully considered the comments on our proposed 80-pound RCL limitation, and have decided not to include the limitation in the final rule. We note that it is important for safety, for all classes of vehicles, that vehicles not be driven in an overloaded condition. However, we believe that the ''less than 2,500 pound'' GVWR limitation in addition to the other limiting attributes of the definition negate the need to specify a RCL to accomplish this goal.

B. Miscellaneous Comments

In the NPRM, we requested comments on several additional issues. In response to our inquiry of whether GVWR is the most appropriate method for restricting the size of LSVs, DaimlerChrysler commented that it agreed with the method but also suggested a minimum height limitation to aid the conspicuity of LSV vehicles. We have reviewed DaimlerChrysler's comments and note that we have recently addressed the LSV conspicuity issue. For further details, please see our original final rule (63 FR 33194, June 17, 1998) and our recent termination of rulemaking (70 FR 7222, Feb. 11, 2005) where we determined that there is an absence of data showing a conspicuity-related safety problem with current LSV designs.

ZAP and C.C. Chan commented that NHTSA should consider broadening the LSV definition to include 3-wheeled vehicles. ZAP noted that many low speed vehicles in Europe have 3 wheels. However, the 4-wheel limitation distinguishes a LSV from a ''motor cycle'' or a ''motor-driven cycle'' as defined in 49 CFR § 571.3. Motorcycles and motor-driven cycles are separately regulated. Our proposal to change the LSV definition does not change the relationship in how we regulate LSVs and motorcycles or motor-driven cycles. Any such change is beyond the scope of this rulemaking and would require us to do further analysis and provide for public comment on such a change.

Several commenters, *i.e.*, Mr. Alex Campbell, Representative Lynn Woolsey, and EDTA, commented that the government should be working to reduce the restrictions for zero-emission forms of transportation, and promote the use of technologies that provide environmental benefits.

As we stated in the June 1998 final rule, we believe that the creation of the LSV class would help, not hurt, communities reach environmental goals. We believe that the promulgation of FMVSS No. 500 was a pragmatic, flexible and necessary approach to regulating the safety of LSVs. The adoption of the GVWR limitation is necessary to balance the utility of the LSV with safety concerns. Eliminating the truck exclusion further increases the flexibility of the LSV class and may provide additional environmental benefits by permitting the manufacture of a vehicle that could be operated in lieu of a truck in the appropriate operating environments.

V. Rulemaking Analyses and Notices

Executive Order 12866 and DOT Regulatory Policies and Procedures

Executive Order 12866, ''Regulatory Planning and Review'' (58 FR 51735, October 4, 1993), provides for making determinations whether a regulatory action is ''significant'' and therefore subject to Office of Management and Budget (OMB) review and to the requirements of the Executive Order. The Order defines a ''significant regulatory action'' as one that is likely to result in a rule that may:

(1) Have an annual effect on the economy of $100 million or more or adversely affect in a material way the economy, a sector of the economy, productivity, competition, jobs, the environment, public health or safety, or State, local, or Tribal governments or communities;

(2) Create a serious inconsistency or otherwise interfere with an action taken or planned by another agency;

(3) Materially alter the budgetary impact of entitlements, grants, user fees, or loan programs or the rights and obligations of recipients thereof; or

(4) Raise novel legal or policy issues arising out of legal mandates, the President's priorities, or the principles set forth in the Executive Order.

This rulemaking document was not reviewed under Executive Order 12866, ''Regulatory Planning and Review.'' The agency is aware of only one LSV (the imported ZAP Worldcar) currently produced that will no longer be classified as a LSV under the final rule. This impact will not result in an annual effect on the economy of $100 million or more.

As discussed below in Regulatory Flexibility Act analysis, the manufacturer of this vehicle has two options: (1) To redesign the vehicle to comply with the full set of FMVSSs, or (2) to reduce the weight and GVWR of the vehicle so that it meets LSV class limitations.

This final rule will permit current LSV manufacturers to produce LSVs for more work oriented functions. In the petitions for rulemaking received by the agency and the comments on this rulemaking, manufacturers stated that the definition adopted today will allow them to expand production to meet a consumer need.

Regulatory Flexibility Act

Pursuant to the Regulatory Flexibility Act (5 U.S.C. 601 *et seq.*, as amended by the Small Business Regulatory Enforcement Fairness Act (SBREFA) of 1996), whenever an agency is required to publish a notice of rulemaking for any proposed or final rule, it must prepare and make available for public comment a regulatory flexibility analysis that describes the effect of the rule on small entities (*i.e.*, small businesses, small organizations, and small governmental jurisdictions). No regulatory flexibility analysis is required if the head of an agency certifies the rule will not have a significant economic impact on a substantial number of small entities. SBREFA amended the Regulatory Flexibility Act to require Federal agencies to provide a statement of the factual basis for certifying that a rule will not have a significant economic impact on a substantial number of small entities.

I certify that the proposed amendment will not have a significant economic impact on a substantial number of small entities.

The following is the agency's statement providing the factual basis for the certification (5 U.S.C. 605(b)). The final rule directly affects motor vehicle manufacturers, specifically, manufacturers of LSVs. North American Industry Classification System Codes (NAISC) code number 336111, Automobile Manufacturing, prescribes a small business size standard of 1,000 or fewer employees. NAISC code number 336211, Motor Vehicle Body Manufacturing, prescribes a small business size standard of 1,000 or fewer employees.

The establishment of the new category of motor vehicles, low-speed vehicles, under FMVSS No. 500, in 1998, provided small business with the opportunity to expand into a new market. This final rule will further permit the manufacture of LSVs to meet additional needs, but it will also limit the market for LSVs to those under 2,500 pounds GVWR. The previous definition of LSV did not limit the GVWR of motor vehicles that could be defined as a LSV.

In 2003, over 30 manufacturers had registered with NHTSA as intending to manufacture LSVs. One-third of these manufacturers listed the intended GVWR range as including vehicles over 2,500 pounds. However, to our knowledge at this time, there is only one U.S. manufacturer (California Manufacture of Electric Vehicles (CAMEV)) with actual plans to produce a LSV with a GVWR over 2,500 pounds. CAMEV has 1,000 or fewer employees.

CAMEV has not yet manufactured a vehicle and is in the development stage. CAMEV stated that the GVWR limit of ''less than 2,500 pounds'' is not the appropriate method of restricting the size of LSVs and that the proposed GVWR would not provide enough weight allowance for the electric propulsion system, and would limit the vehicle's applications. CAMEV stated that it is designing an electric vehicle

''model Q'' that has a GVWR of approximately 3,200 pounds. CAMEV recommended a 3,200-pound GVWR limitation.

As explained above, the agency has determined that ''less than 2,500 pounds'' is an appropriate limit for LSVs and has taken into consideration the weight of electric propulsion systems. If CAMEV wants to keep the current vehicle design of over 2,500 pounds GVWR, then it must make the vehicle fully compliant with all applicable FMVSSs for a vehicle over 2,500 pounds GVWR.

The cost implications of these choices are difficult to estimate. Reducing the GVWR of the vehicle may be a difficult task once a vehicle is in production. Manufacturers seeking to reduce weight of LSVs can utilize mechanical innovations, advanced material technologies, and design concepts to achieve this goal while maintaining vehicle performance. Unconventional design features and aerodynamics, along with lightweight materials reduce weight throughout the vehicle and lower drag coefficient, thus requiring less power. The development of higher efficiency propulsion systems and advanced energy storage, underway through government and industry initiatives, will accelerate the production of LSVs meeting FMVSS requirements, lower cost, and provide options in the design of the LSV package.

However, weight reduction of a vehicle still in development could be accomplished with the above listed technologies without a significant economic impact to the manufacturer. Incorporating the above listed technologies would maintain the functional design of the vehicle and possibly provide benefits in fuel economy or battery life.

Designing the vehicle to comply with applicable FMVSSs is another alternative. NHTSA estimates that the FMVSSs added an average of $858 (in 2003 dollars) and 125 pounds to the average passenger car in model year 2001, from 1968 cost and weight. While the cost to redesign an LSV to comply with the FMVSSs applicable to a passenger car would likely be greater than this average, we believe that the additional cost and weight attributed to specific safety technologies associated with FMVSSs would not be burdensome for a manufacturer to attain, particularly given that LSVs already must have brakes, lights, safety belts and other basic features.

The agency also received comment from a business, ZAP, that imports LSV above the GVWR limit adopted in this final rule. ZAP stated that it has marketed over 85,000 electric vehicles since 1994, and currently imports completed vehicles made in China. ZAP did not specify how many of these vehicles were classified as LSVs or how many of these vehicles were LSVs with a GVWR greater than the limit adopted in today's final rule.

ZAP stated that its new 2004 ZAP Worldcar vehicle would no longer be classified as a LSV, since its GVWR is 3,007 pounds. However, this final rule does not prevent ZAP from continuing to sell LSVs that meet the regulatory definition. The imported vehicles could either be redesigned or certified to all FMVSSs applicable to passenger cars, as explained for CAMEV. Further, ZAP already advertises a motor vehicle with a GVWR below 2,500 pounds that is not a LSV, *i.e.*, the SMART car.

Paperwork Reduction Act

NHTSA has analyzed this final rule under the Paperwork Reduction Act of 1995 (Pub. L. 104–13) and determined that it will not impose any new information collection requirements as that term is defined by the Office of Management and Budget (OMB) in 5 CFR part 1320.

The National Environmental Policy Act

NHTSA has also analyzed this final rule under the National Environmental Policy Act and determined that it will have no significant impact on the human environment. LSV usage is very small in comparison to that of motor vehicles as a whole; therefore, any change to the LSV segment does not have a significant environmental effect.

The Unfunded Mandates Reform Act

The Unfunded Mandates Reform Act of 1995 (Pub. L. 104–4) requires agencies to prepare a written assessment of the costs, benefits and other effects of proposed or final rules that include a Federal mandate likely to result in the expenditure by State, local or tribal governments, in the aggregate, or by the private sector, of more than $100 million annually. This final rule does not result in annual expenditures exceeding the $100 million threshold.

Executive Order 13132 (Federalism)

Executive Order 13132 on ''Federalism'' requires us to develop an accountable process to ensure meaningful and timely input by State and local officials in the development of ''regulatory policies that have federalism implications.'' The Executive Order defines this phrase to include regulations ''that have substantial direct effects on the States, on the relationship between the national government and the States, or on the distribution of power and responsibilities among the various levels of government.''

The agency has analyzed this rule in accordance with the principles and criteria set forth in Executive Order 13132 and has determined that it will not have sufficient federalism implications to warrant consultation with State and local officials or the preparation of a federalism summary impact statement.

In the 1998 final rule, which established the LSV definition, the agency noted that:

> Under the preemption provisions of 49 U.S.C. 30103(b)(1), with respect to those areas of a motor vehicle's safety performance regulated by the Federal government, any state and local safety standards addressing those areas must be identical. Thus, the state or local standard, if any, for vehicles classified as LSVs must be identical to Standard No. 500 in those areas covered by that standard. For example, since Standard No. 500 addresses the subject of the type of lights which must be provided, state and local governments may not require additional types of lights. Further, since the agency has not specified performance requirements for any of the required lights, state and local governments may not do so either.

63 FR at 33215. In a 1998 NPRM we revised this discussion by stating that:

> [W]e have re-examined our statements about preemption in the preamble of the final rule. In those statements, we explained that, in view of our conscious decision not to adopt any performance requirements for most of the types of equipment required by Standard No. 500, the states were preempted from doing so. * * * As a result of re-examining our views, we have concluded that we should not assert * * * preemption in this particular situation. Accordingly, we agree that the states may adopt and apply their own performance requirements for required LSV lighting equipment, mirrors, and parking brakes until we have established performance requirements for those items of equipment. However, the states remain precluded from adopting additional equipment requirements in areas covered by Standard No. 500.

65 FR 53219, 53220; September 1, 2000.

We are unaware of any existing state laws that would be preempted by today's final rule. We recognize that California's definition of ''low-speed vehicle'' establishes a maximum ''unladen weight of 1,800 pounds'' (Cal. Vehicle Code section 385.5).[7] Unlike GVWR, the unladen weight is the weight of the vehicle without occupants

[7] We also note that Hawaii has incorporated a maximum ''unladen weight'' in its definition of NEV, which is limited to electrically powered motor vehicles (HRS § 286–2).

or cargo. (See, Cal. Vehicle Code Section 289). Today's final rule does not specify a maximum unladen weight for LSVs. Therefore, consistent with our past pronouncements regarding LSVs and preemption of State law, the addition of a maximum GVWR in today's final rule does not preempt California's definition of LSV.

This rule will not have substantial direct effect on the States, on the relationship between the national government and the States, or on the distribution of power and responsibilities among the various levels of government, as specified in Executive Order 13132.

Executive Order 12988 (Civil Justice Reform)

Executive Order 12988 requires that agencies review proposed regulations and legislation and adhere to the following general requirements: (1) The agency's proposed legislation and regulations shall be reviewed by the agency to eliminate drafting errors and ambiguity; (2) the agency's proposed legislation and regulations shall be written to minimize litigation; and (3) the agency's proposed legislation and regulations shall provide a clear legal standard for affected conduct rather than a general standard, and shall promote simplification and burden reduction.

When promulgating a regulation, Executive Order 12988, specifically requires that the agency must make every reasonable effort to ensure that the regulation, as appropriate: (1) Specifies in clear language the preemptive effect, (2) specifies in clear language the effect on existing Federal law or regulation, including all provisions repealed, circumscribed, displaced, impaired, or modified, (3) provides a clear legal standard for affected conduct rather than a general standard, while promoting simplification and burden reduction, (4) specifies in clear language the retroactive effect, (5) specifies whether administrative proceedings are to be required before parties may file suit in court, (6) explicitly or implicitly defines key terms, and (7) addresses other important issues affecting clarity and general draftsmanship of regulations.

NHTSA has reviewed this final rule according to the general requirements and the specific requirements for regulations set forth in Executive Order 12988. This final rule revises the definition of the term ''low-speed vehicle (LSV)'' in 49 CFR Part 571. This change does not preemptive any existing State law and does not have a retroactive effect. A petition for reconsideration or other administrative proceeding is not required before parties may file suit in court. However, this change does change a ''key term'' within the meaning of Executive Order 12988. The agency has made every effort to ensure that this key term has been explicitly defined.

Regulation Identifier Number (RIN)

The Department of Transportation assigns a regulation identifier number (RIN) to each regulatory action listed in the Unified Agenda of Federal Regulations. The Regulatory Information Service Center publishes the Unified Agenda in April and October of each year. You may use the RIN contained in the heading at the beginning of this document to find this action in the Unified Agenda.

Data Quality Guidelines

After reviewing the provisions of the final rule, pursuant to OMB's Guidelines for Ensuring and Maximizing the Quality, Objectivity, Utility, and Integrity of Information Disseminated by Federal Agencies (''Guidelines'') issued by the Office of Management and Budget (OMB) (67 FR 8452, Feb. 22, 2002) and published in final form by the Department of Transportation on October 1, 2002 (67 FR 61719), NHTSA has determined that nothing in this rulemaking action would result in ''information dissemination'' to the public, as that term is defined in the Guidelines.

Executive Order 13045

Executive Order 13045 (62 FR 19885, April 23, 1997) applies to any rule that: (1) Is determined to be ''economically significant'' as defined under Executive Order 12866, and (2) concerns an environmental, health or safety risk that NHTSA has reason to believe may have a disproportionate effect on children. If the regulatory action meets both criteria, we must evaluate the environmental health or safety effects of the planned rule on children, and explain why the planned regulation is preferable to other potentially effective and reasonably feasible alternatives considered by us. As noted earlier, this rule is not economically significant, nor does it concern a safety risk with a disproportionate effect on children.

National Technology Transfer and Advancement Act

Section 12(d) of the National Technology Transfer and Advancement Act (NTTAA) requires NHTSA to evaluate and use existing voluntary consensus standards in its regulatory activities unless doing so would be inconsistent with applicable law (*e.g.*, the statutory provisions regarding NHTSA's vehicle safety authority) or otherwise impractical. In meeting that available and potentially applicable voluntary consensus standard, we are required by the Act to provide Congress, through OMB, with an explanation of the reasons for not using such standards. The agency specifically considered SAE J–2358 in the development of this final rule.

Privacy Act

Anyone is able to search the electronic form of all submissions received into any of our dockets by the name of the individual submitting the comment (or signing the comment, if submitted on behalf of an association, business, labor union, etc.). You may review DOT's complete Privacy Act Statement in the **Federal Register** published on April 11, 2000 (Volume 65, Number 70; Pages 19477–78) or you may visit *http://dms.dot.gov.*

List of Subjects in 49 CFR Part 571

Imports, Motor vehicle safety, Motor vehicles, Low-speed vehicles.

■ For reasons set forth in the preamble, NHTSA amends 49 CFR part 571 to read as follows:

PART 571—FEDERAL MOTOR VEHICLE SAFETY STANDARDS

■ 1. The authority citation for part 571 continues to read as follows:

Authority: 49 U.S.C. 322, 30111, 30166 and 30177; delegation of authority at 49 CFR 1.50.

Subpart A—General

■ 2. Section 571.3(b) is amended by revising the term ''low-speed vehicle'' to read as follows:

§ 571.3 Definitions.

* * * * *

(b) *Other definitions.* * * *

Low-speed vehicle (LSV) means a motor vehicle,

(1) that is 4-wheeled,

(2) whose speed attainable in 1.6 km (1 mile) is more than 32 kilometers per hour (20 miles per hour) and not more than 40 kilometers per hour (25 miles per hour) on a paved level surface, and

(3) whose GVWR is less than 1,134 kilograms (2,500 pounds).

* * * * *

Issued: August 11, 2005.

Ronald L. Medford,

Senior Associate Administrator for Vehicle Safety.

[FR Doc. 05–16323 Filed 8–16–05; 8:45 am]

BILLING CODE 4910–59–U

DEPARTMENT OF THE INTERIOR

Fish and Wildlife Service

50 CFR Part 18

RIN 1018–AT48

Marine Mammals; Native Exemptions

AGENCY: Fish and Wildlife Service, Interior.

ACTION: Final rule.

SUMMARY: We, the Fish and Wildlife Service (Service), amend regulations implementing the Marine Mammal Protection Act of 1972 (MMPA), as amended. This action revises our existing definition of ''authentic native articles of handicrafts and clothing'' to reflect a December 28, 1992, Court ruling, which found that our regulation defining ''authentic native articles of handicrafts and clothing'' is inconsistent with the MMPA.

DATES: *Effective date:* The amendments in this final rule are effective September 16, 2005.

ADDRESSES: Comments and materials received in response to this action are available for inspection during normal business hours from 8 a.m. to 4:30 p.m., Monday through Friday, at the U.S. Fish and Wildlife Service, Division of Habitat and Resource Conservation, 4401 North Fairfax Drive, Suite 400, Arlington, Virginia. To be sure someone is available to help you, please call (703) 358–2161 before visiting.

FOR FURTHER INFORMATION CONTACT: Diane Bowen, Division of Habitat and Resource Conservation, in Arlington, Virginia, at 703/358–2161.

SUPPLEMENTARY INFORMATION:

Background

After passage of the Marine Mammal Protection Act (16 U.S.C. 1361, *et seq.*) in 1972, we promulgated regulations at 50 CFR part 18 to implement this authority. We included in our proposed regulations a definition similar to that in Section 101(b)(2) of the MMPA for ''authentic native articles of handicrafts and clothing'' (37 FR 25524; December 1, 1972), part of which read:

''* * * *Items composed wholly or in some significant respect of natural materials, and which are produced, decorated, or fashioned in the exercise of traditional native handicrafts. Traditional native handicrafts include, but are not limited to, weaving, carving, stitching, sewing, lacing, beading, drawing, and painting, so long as the use of pantographs, multiple carvers, or other mass copying devises, or other improved methods of production utilizing modern implements such as sewing machines, are not utilized.*''

The final rule (37 FR 28173; December 21, 1972) added the requirement that these items must be ''commonly produced on or before December 21, 1972'' and read:

''* * * *Items which (a) were commonly produced on or before December 21, 1972, and (b) are composed wholly or in some significant respect of natural materials, and (c) which are produced, decorated, or fashioned in the exercise of traditional native handicrafts without the use of pantographs, multiple carvers, or similar mass copying devises, or other improved methods of production utilizing modern implements, such as sewing machines. Traditional native handicrafts include, but are not limited to weaving, carving, stitching, sewing, lacing, beading, drawing, and painting.*''

Although our MMPA implementing regulations were published on December 21, 1972 as a final rule, we invited the public to provide comments, suggestions, and objections for a 60-day period. Based on comments received, we issued a proposed rule to amend our implementing regulations (38 FR 22143; August 16, 1973), followed by a final rule (38 FR 7262; February 25, 1974). The definition for ''authentic native articles of handicrafts and clothing'' at 50 CFR 18.3 was amended by the following additions: (1) The articles must have been made by an Indian, Aleut, or Eskimo; (2) the articles must be significantly altered from their natural form; (3) modern techniques at a tannery registered pursuant to § 18.23(c) may be used so long as no large scale mass production industry results; and (4) the formation of traditional native groups, such as cooperatives, is permitted as long as no large scale mass production results.

The regulations were enforced and subsequently challenged in court. While initially upheld in court, the U.S. District Court called for a thorough administrative review of the section of the regulations (50 CFR 18.23) that addresses the taking of northern sea otters under the native exemptions. Following the review, the Service published a notice of proposed rulemaking on November 14, 1988, to clarify the regulations as they apply to the sea otter (53 FR 45788). Those proposed regulations would prohibit all takings of sea otters by Alaska Natives for the purpose of creating and selling handicrafts or clothing. An interim rule was subsequently published on April 20, 1990 (55 FR 14973). This 1990 rule was, for the most part, identical to the 1974 rule. However, the rule included a qualifying statement with regard to sea otters that stated ''[P]rovided that, it has been determined that no items created in whole or in part from sea otter meet part (a) [that is, ''were commonly produced on or before December 21, 1972''] of this definition and therefore no such items may be sold'' (55 FR 14973). We further stated in the rule that, following the completion of a management plan for northern sea otter, we would replace the interim rule with a final rule, if appropriate. The interim rule became effective on May 21, 1990. Although we developed and issued a ''Conservation Plan for the Sea Otter in Alaska'' in June 1994, we did not revisit the regulatory definition put into place by our interim rule, and the language still exists in 50 CFR 18.3.

In 1990, a number of parties challenged our definition as violating the MMPA. On July 17, 1991, in *Didrickson* v. *U.S. Department of the Interior*, the U.S. District Court for the District of Alaska ruled in favor of the Plaintiffs. The Court wrote that we had defined ''authentic,'' as used in the phrase, ''authentic native articles of handicrafts and clothing * * *'' (in the Native exemption section of the Act), ''in such a way as to broaden [the Service's] own regulatory authority over [Native] activities that the plain language of the statute would not otherwise permit.'' The Court further ruled that the MMPA did not mandate restriction of its Alaska native handicraft exemption to apply only to artifacts commonly produced on or before December 21, 1972. In its conclusion, the Court stated that, while its ''opinion should not be construed as authorizing a ''free-for-all'' killing of hundreds of sea otters,'' the Service ''does not have the authority to regulate the harvesting of sea otters for purposes of creating native handicrafts absent a finding of depletion.'' The Court also stated that the Service has the authority to take enforcement action against any takings that are wasteful. This decision was appealed to the Ninth Circuit Court of Appeals, which, on December 28, 1992, affirmed the District Court's ruling.

Notice of Proposed Rulemaking

On June 4, 2004, we published a proposed rule (69 FR 31582) and requested public comment on the rulemaking to revise our regulations in 50 CFR part 18 and make them consistent with the court rulings described above. Specifically, the action would eliminate the requirement in 50 CFR 18.3 for ''*Authentic native articles of handicrafts and clothing*'' to have been commonly produced on or before

December 21, 1972, and would delete the language at the end of the definition that states:

''*Provided that, it has been determined that no items created in whole or in part from sea otter meet part (a) of this definition and therefore no such items may be sold.*''

Comments on the Proposed Rule

We received two comments on the proposed rule. One commenter fully supported the amendment and urged the agency to make the changes as soon as possible. The other commenter did not indicate whether they supported the amendment but, instead requested that the Secretary of the Department of the Interior reevaluate the regulations regarding native take exemptions should the southwest Alaska distinct population segment of the northern sea otter be listed as threatened under the U.S. Endangered Species Act and, therefore, automatically deemed depleted under the MMPA. This comment is beyond the scope of this rulemaking process, which is to amend the regulatory definition of ''authentic native handicraft'' consistent with a Court ruling. There is a separate rulemaking process that deals with the status of the population.

Conclusion

The Service has concluded that, based on the information presented above and, in consideration of public comments, amendment of the definition of ''authentic native handicraft'' is appropriate and is warranted to be in compliance with a Court ruling.

Required Determinations

Regulatory Planning and Review

In accordance with the criteria in Executive Order 12866, this rule is not a significant regulatory action. The Office of Management and Budget makes the final determination under Executive Order 12866.

a. This rule will not have an annual economic impact of $100 million or adversely affect an economic sector, productivity, jobs, the environment, or other units of government. There are no compliance costs to any sector of the economy. A cost-benefit analysis is not required. We do not expect that any significant economic impacts would result from the revision of this definition. The only expenses related to this were to the Federal Government to write the rule and required Record of Compliance, and to publish the final rule in the **Federal Register**; these costs should not exceed $25,000.

b. This rule will not create a serious inconsistency or otherwise interfere with an action taken or planned by another agency.

c. This rule will not materially affect entitlements, grants, user fees, loan programs, or the rights and obligations of their recipients.

d. This rule will not raise novel legal or policy issues.

Regulatory Flexibility Act

We certify that this rule will not have a significant economic effect on a substantial number of small entities as defined under the Regulatory Flexibility Act (5 U.S.C. 601 *et seq.*). An initial/final Regulatory Flexibility Analysis is not required. Accordingly, a Small Entity Compliance Guide is not required.

Small Business Regulatory Enforcement Fairness Act

This rule is not a major rule under 5 U.S.C. 804(2). This rule:

a. Does not have an annual effect on the economy of $100 million or more.

b. Will not cause a major increase in costs or prices for consumers, individual industries, Federal, State, or local government agencies, or geographic regions.

c. Does not have significant adverse effects on competition, employment, investment, productivity, innovation, or the ability of U.S.-based enterprises to compete with foreign-based enterprises.

Unfunded Mandates Reform Act

In accordance with the Unfunded Mandates Reform Act (2 U.S.C. 1501 *et seq.*):

a. This rule will not ''significantly or uniquely'' affect small governments. A Small Government Agency Plan is not required.

b. This rule will not produce a Federal mandate of $100 million or greater in any year. As such, it is not a ''significant regulatory action'' under the Unfunded Mandates Reform Act.

Takings

In accordance with Executive Order 12630, this rule does not have significant takings implications. We have determined that the rule has no potential takings of private property implications as defined by this Executive Order because it removes a regulatory definition determined by a Federal Court to exceed the statutory provisions of the MMPA. A takings implication assessment is not required.

Federalism

In accordance with Executive Order 13132, this rule does not have significant Federalism effects. A Federalism assessment is not required. This rule will not have substantial direct effects on the State, in the relationship between the Federal Government and the State, or on the distribution of power and responsibilities among the various levels of government.

Civil Justice Reform

In accordance with Executive Order 12988, the Office of the Solicitor has determined that this rule does not unduly burden the judicial system and meets the requirements of sections 3(a) and 3(b)(2) of the Order.

Paperwork Reduction Act

This regulation does not contain collections of information that require approval by the Office of Management and Budget under 44 U.S.C. 3501 *et seq.* The regulation will not impose new record keeping or reporting requirements on State or local governments, individuals, and businesses, or organizations.

National Environmental Policy Act

We have considered this action with respect to Section 102(2)(C) of the National Environmental Policy Act of 1969, and have determined that the action is categorically excluded, pursuant to U.S. Department of the Interior criteria, from the NEPA process; the preparation of an Environmental Assessment is not required as defined by USDI categorical exclusion 1.10 (516 DM, Chapter 2, Appendix 1, Departmental Categorical Exclusions). This categorical exclusion exempts ''*[p]olicies, directives, regulations, and guidelines of an administrative, financial, legal, technical, or procedural nature.*'' Given that this rule amends a regulation, in response to a Court ruling, the exclusion applies to this action.

Government-to-Government Relationship With Tribes

In accordance with the President's memorandum of April 29, 1994, ''Government-to-Government Relations with Native American Tribal Governments'' (59 FR 22951), Executive Order 13175 and the Department of the Interior's manual at 512 DM 2, we readily acknowledge our responsibility to communicate meaningfully with federally recognized Tribes on a Government-to-Government basis. We have evaluated possible effects on federally recognized Indian tribes and have determined that this rule will have a positive effect on tribes as it relieves a regulatory restriction consistent with a Court ruling.

Energy Supply, Distribution, or Use (Executive Order 13211)

On May 18, 2001, the President issued Executive Order 13211 on regulations that significantly affect energy supply, distribution, and use. Executive Order 13211 requires agencies to prepare Statements of Energy Effects when undertaking certain actions. Because this rule is not a significant regulatory action under Executive Order 12866, it is not expected to significantly affect energy supplies, distribution, and use. Therefore, this action is a not a significant energy action and no Statement of Energy Effects is required.

List of Subjects in 50 CFR Part 18

Administrative practice and procedure, Alaska, Imports, Indians, Marine mammals, Oil and gas exploration, Reporting and recordkeeping requirements, Transportation.

■ In consideration of the foregoing, 50 CFR part 18, subpart A of chapter I, title 50 of the Code of Federal Regulations, is amended as follows:

PART 18—MARINE MAMMALS

■ 1. The authority citation for 50 CFR part 18 continues to read as follows:

Authority: 16 U.S.C. 1361 *et seq.*

■ 2. In § 18.3, revise the definition for *Authentic native articles of handicrafts and clothing* as follows:

§ 18.3 Definitions.

* * * * *

Authentic native articles of handicrafts and clothing means items made by an Indian, Aleut, or Eskimo that (a) are composed wholly or in some significant respect of natural materials and (b) are significantly altered from their natural form and are produced, decorated, or fashioned in the exercise of traditional native handicrafts without the use of pantographs, multiple carvers, or similar mass-copying devices. Improved methods of production utilizing modern implements such as sewing machines or modern techniques at a tannery registered pursuant to § 18.23(c) may be used so long as no large-scale mass-production industry results. Traditional native handicrafts include, but are not limited to, weaving, carving, stitching, sewing, lacing, beading, drawing, and painting. The formation of traditional native groups, such as cooperatives, is permitted so long as no large-scale mass production results.

* * * * *

Dated: August 2, 2005.

Paul Hoffman,

Acting Assistant Secretary for Fish and Wildlife and Parks.

[FR Doc. 05–16277 Filed 8–16–05; 8:45 am]

BILLING CODE 4310–55–P

DEPARTMENT OF COMMERCE

National Oceanic and Atmospheric Administration

50 CFR Part 622

[Docket No. 050209033–5033–01; I.D. 020405D]

RIN 0648–AS97

Fisheries of the Caribbean, Gulf of Mexico, and South Atlantic; Reef Fish Fishery of the Gulf of Mexico; Extension of Commercial Trip Limits for Gulf of Mexico Grouper Fishery

AGENCY: National Marine Fisheries Service (NMFS), National Oceanic and Atmospheric Administration (NOAA), Commerce.

ACTION: Temporary rule; emergency action; extended.

SUMMARY: An emergency rule of February 17, 2005, that established trip limits for the commercial shallow-water and deep-water grouper fisheries in the exclusive economic zone of the Gulf of Mexico is in effect from March 3, 2005, through August 16, 2005. NMFS extends that emergency rule for an additional 180 days through February 12, 2006. The intended effects of that emergency rule are to moderate the rate of harvest of the available quotas, reduce the adverse social and economic effects of derby fishing, enable more effective quota monitoring, and reduce the probability of overfishing.

DATES: Effective from August 17, 2005, through February 12, 2006.

ADDRESSES: Copies of documents supporting this rule may be obtained from the Southeast Regional Office, NMFS, 263 13th Avenue South, St. Petersburg, FL 33701.

FOR FURTHER INFORMATION CONTACT: Phil Steele, 727–551–5784; fax: 727–824–5308, e-mail: *Phil.Steele@noaa.gov*.

SUPPLEMENTARY INFORMATION: The fishery for reef fish is managed under the Fishery Management Plan for the Reef Fish Resources of the Gulf of Mexico (FMP) that was prepared by the Gulf of Mexico Fishery Management Council (Council). This FMP was approved by NMFS and implemented under the authority of the Magnuson-Stevens Fishery Conservation and Management Act (Magnuson-Stevens Act) by regulations at 50 CFR part 622.

In response to a request from the Council, NMFS published an emergency rule (70 FR 8037, February 17, 2005) under section 305(c)(1) of the Magnuson-Stevens Act, that established trip limits for the commercial shallow-water and deep-water grouper fisheries in the exclusive economic zone of the Gulf of Mexico. The trip limits were, and remain, necessary to slow the rate of harvest of the available commercial grouper quotas, extend the fishing season, reduce the effects of derby fishing, and reduce the probability of overfishing.

The trips limits were originally proposed to the Council by representatives of the commercial reef fish fishery as follows: (1) On January 1, all vessels will be limited to a 10,000–lb (4,536–kg), gutted-weight (GW), trip limit for deep-water grouper and shallow-water grouper combined; (2) if on or before August 1 the fishery is estimated to have landed more than 50 percent of either the shallow-water grouper or the red grouper quota, then a 7,500–lb (3,402–kg) GW trip limit takes effect; and (3) if on or before October 1 the fishery is estimated to have landed more than 75 percent of either the shallow-water grouper or the red grouper quota, then a 5,500–lb (2,495–kg) GW trip limit takes effect. Because implementation of the original emergency rule occurred after January 1, NMFS revised item (1) above to reflect the appropriate implementation date, March 3. This extension of the emergency rule will include at § 622.44(h)(1)(i) the period beginning January 1; therefore, this emergency rule modifies item (1) to again reflect the January 1 date consistent with the intent of the original proposal. NMFS also adds one other minor clarification in this emergency rule to explain that, although the trip limits are for shallow-water grouper and deep-water grouper are combined, if either fishery has reached its quota and has been closed, no fish subject to the closure may be possessed under the applicable trip limit.

Under section 305(c)(3)(B) of the Magnuson-Stevens Act, NMFS may extend the effectiveness of an emergency rule for one additional period of 180 days, provided the public has had an opportunity to comment on the emergency rule and the Council is actively preparing proposed regulations to address the issue on a permanent basis.

NMFS solicited comments on the initial emergency rule through March 21, 2005, and received one comment in

support of the emergency rule. NMFS concurs that the emergency was, and remains, necessary to reduce adverse effects of derby fishing, extend the fishing season, and reduce the probability of overfishing.

The Council is preparing a regulatory amendment and associated proposed regulations which will address measures, including trip limits, to moderate the rate of harvest in the Gulf grouper commercial fishery. Those measures, if approved and implemented by NMFS, would replace this emergency rule. Action to address these issues via the proposed regulations associated with the regulatory amendment cannot be implemented before the current emergency rule expires on August 17, 2005. Extension of the emergency rule is necessary to avoid a regulatory lapse and to ensure that the rate of harvest remains under proper control so the season can be extended as much as possible and the risk of overfishing is minimized.

Additional details concerning the basis for these commercial trip limits are contained in the preamble to the initial emergency rule and are not repeated here.

Classification

The Assistant Administrator for Fisheries, NOAA (AA), has determined that this extension of the emergency rule is necessary to minimize adverse social and economic impacts, (*i.e.,* derby fishing, market gluts, lower ex-vessel prices, potential safety-at-sea issues, and a shortened fishing season). The AA has also determined that this rule is consistent with the Magnuson-Stevens Act and other applicable laws.

This emergency rule has been determined to be not significant for purposes of Executive Order 12866.

This emergency rule is exempt from the procedures of the Regulatory Flexibility Act because the rule is issued without opportunity for prior notice and opportunity for public comment.

The AA finds good cause to waive the requirement to provide prior notice and opportunity for public comment, pursuant to authority set forth at U.S.C. 553(b)(B), as such procedures would be impracticable and contrary to the public interest. This emergency rule merely extends the commercial trip limits established by the initial emergency rule which was subject to public comment. The only comment received supported the implementation of the emergency rule. This extension of the emergency rule is necessary to continue the moderation of the rate of harvest of the available quotas, thereby helping to keep the fishery open for more of the fishing year and reducing the effects of derby fishing and the associated adverse social and economic impacts. As previously indicated, preliminary January data indicated a 23–percent increase in landings over the comparable time frame in 2004. An early and disruptive closure is highly likely if the trip limits were to lapse. For these same reasons, under 5 U.S.C. 553(d)(3), the AA finds good cause that a 30-day delay in the effective date of this emergency rule would be contrary to the public interest.

List of Subjects in 50 CFR Part 622

Fisheries, Fishing, Puerto Rico, Reporting and recordkeeping requirements, Virgin Islands.

Dated: August 11, 2005.

James W. Balsiger,

Acting Deputy Assistant Administrator for Regulatory Programs, National Marine Fisheries Service.

■ For the reasons set out in the preamble, 50 CFR part 622 is amended as follows:

PART 622—FISHERIES OF THE CARIBBEAN, GULF, AND SOUTH ATLANTIC

■ 1. The authority citation for part 622 continues to read as follows:

Authority: 16 U.S.C. 1801 *et seq.*

■ 2. In § 622.44, paragraph (g) is added to read as follows:

§ 622.44 Commercial trip limits.

* * * * *

(g) *Gulf deep-water and shallow-water grouper, combined.* (1) For vessels operating under the quotas in § 622.42(a)(1)(ii) or § 622.42(a)(1)(iii), the following trip limits apply to Gulf deep-water and shallow-water grouper combined. However, when the quotas in § 622.42(a)(1)(ii) or § 622.42(a)(1)(iii) are reached and the respective fishery is closed, the commercial trip limit for the species subject to the closure is zero. (See § 622.42(a)(1)(ii) and § 622.42(a)(1)(iii) for the species included in the deep-water and shallow-water grouper categories, respectively.)

(i) Beginning January 1—10,000 lb (4,536 kg), gutted weight.

(ii) If on or before August 1 more than 50 percent of either the shallow-water grouper quota or red grouper quota specified in § 622.42(a)(1)(iii) is reached or is projected to be reached—7,500 lb (3,402 kg), gutted weight.

(iii) If on or before October 1 more than 75 percent of either the shallow-water grouper quota or red grouper quota specified in § 622.42(a)(1)(iii) is reached or is projected to be reached--5,500 lb (2,495 kg), gutted weight.

(2) The Assistant Administrator, by filing a notification of trip limit change with the Office of the Federal Register, will effect the trip limit changes specified in paragraphs (h)(1)(ii) and (iii) of this section when the applicable conditions have been met.

[FR Doc. 05–16319 Filed 8–12–05; 2:30 pm]

BILLING CODE 3510–22–S

Proposed Rules

Federal Register
Vol. 70, No. 158
Wednesday, August 17, 2005

This section of the FEDERAL REGISTER contains notices to the public of the proposed issuance of rules and regulations. The purpose of these notices is to give interested persons an opportunity to participate in the rule making prior to the adoption of the final rules.

DEPARTMENT OF AGRICULTURE

Animal and Plant Health Inspection Service

9 CFR Parts 101 and 116

[Docket No. 00–071–2]

RIN 0579–AB90

Viruses, Serums, Toxins, and Analogous Products; Records and Reports

AGENCY: Animal and Plant Health Inspection Service, USDA.

ACTION: Proposed rule; withdrawal and reproposal.

SUMMARY: We are proposing to amend the Virus-Serum-Toxin Act regulations concerning records and reports to require veterinary biologics licensees and permittees to record specific information concerning adverse events associated with the use of biological products that they produce or distribute and to compile and submit those records in a summary report to the Animal and Plant Health Inspection Service (APHIS) every 12 months for products licensed for 1 year or more; for newly licensed products, a summary report would have to be submitted at 6-month intervals during the first year of the product license and at 12-month intervals thereafter. The summary report would also have to identify the number of doses, or the average number of doses, of the product in distribution channels, if available. These records and reports would help ensure that APHIS will be able to provide complete and accurate information to consumers regarding adverse reactions or other problems associated with the use of licensed biological products. This proposed rule replaces a previously published proposed rule, which we are withdrawing as part of this document, that contained fewer specifics concerning the information that would have to be recorded in adverse event reports associated with the use of veterinary biologics that are submitted to the Agency.

DATES: We will consider all comments that we receive on or before October 17, 2005.

ADDRESSES: You may submit comments by any of the following methods:

- EDOCKET: Go to *http://www.epa.gov/feddocket* to submit or view public comments, access the index listing of the contents of the official public docket, and to access those documents in the public docket that are available electronically. Once you have entered EDOCKET, click on the ''View Open APHIS Dockets'' link to locate this document.
- Postal Mail/Commercial Delivery: Please send four copies of your comment (an original and three copies) to Docket No. 00–071–2, Regulatory Analysis and Development, PPD, APHIS, Station 3C71, 4700 River Road Unit 118, Riverdale, MD 20737–1238. Please state that your comment refers to Docket No. 00–071–2.
- Federal eRulemaking Portal: Go to *http://www.regulations.gov* and follow the instructions for locating this docket and submitting comments.

Reading Room: You may read any comments that we receive on this docket in our reading room. The reading room is located in room 1141 of the USDA South Building, 14th Street and Independence Avenue SW., Washington, DC. Normal reading room hours are 8 a.m. to 4:30 p.m., Monday through Friday, except holidays. To be sure someone is there to help you, please call (202) 690–2817 before coming.

Other Information: You may view APHIS documents published in the **Federal Register** and related information on the Internet at *http://www.aphis.usda.gov/ppd/rad/webrepor.html.*

FOR FURTHER INFORMATION CONTACT: Dr. Albert P. Morgan, Section Leader, Operational Support Section, Policy, Evaluation, and Licensing, Center for Veterinary Biologics, VS, APHIS, 4700 River Road Unit 148, Riverdale, MD 20737–1231; (301) 734–8245.

SUPPLEMENTARY INFORMATION:

Background

The Virus-Serum-Toxin Act regulations in 9 CFR part 116 (referred to below as the regulations) contain requirements for maintaining detailed records of information necessary to give a complete accounting of all the activities within a veterinary biologics establishment. In § 116.1, paragraph (a) states that such reports must include, but are not limited to, the items enumerated in the regulations, including inventory and disposition records (§ 116.2), information concerning product development and preparation and market suspension and recalls (§ 116.5), animal records (§ 116.6), and test records (§ 116.7).

In § 116.5, paragraph (b) states that if at any time there are indications that raise questions regarding the purity, safety, potency, or efficacy of a product, or if it appears that there may be a problem regarding the preparation, testing, or distribution of a product, the licensee, permittee, or foreign manufacturer must immediately notify the Animal and Plant Health Inspection Service (APHIS) concerning the circumstances and the action taken, if any.

However, the regulations in § 116.1 do not explicitly require licensees and permittees to maintain records of adverse events associated with the use of veterinary biologics, nor do the regulations in § 116.5 provide specific guidance in determining whether an adverse event should be considered an indication that raises questions regarding the purity, safety, potency, efficacy, preparation, testing, or distribution (PSPEPTD) of such product. Consequently, each veterinary biologics manufacturer makes an independent determination concerning (1) whether an adverse event report raises PSPEPTD questions and (2) when and in what manner such report of the adverse event will be provided to APHIS.

To limit the harm to animals posed by unsatisfactory veterinary biologics, APHIS must rely on adverse event reports provided by veterinary biologics licensees and permittees. However, without any explicit guidance in the regulations as to the form those reports should take, licensees and permittees are using nonstandardized methods to record and submit reports regarding adverse events to APHIS. Similarly, without explicit reporting requirements concerning adverse events, reports that may signal problems concerning the use of veterinary biological products are not all being submitted to APHIS in a timely manner.

To address this situation, on January 15, 2002, we published in the **Federal Register** (67 FR 1910–1913, Docket No. 00–071–1) a proposed rule to amend the regulations concerning records and reports to require veterinary biologics licensees and permittees to record and submit reports to APHIS concerning adverse events associated with the use of veterinary biological products that they produce or distribute. The proposed rule would have required veterinary biologics licensees and permittees to report to APHIS the number of doses of each licensed product that they distribute. The proposed rule also would have amended the regulations in 9 CFR part 101 to provide definitions for the terms *adverse event* and *adverse event report.*

We solicited comments on our proposal for 60 days ending on March 18, 2002. We received 13 comments by that date. The comments were from 10 veterinary biologics manufacturers, 2 trade associations representing veterinary biologics manufacturers, and a veterinary association. Six commenters expressed conceptual support for the proposed rule, but were concerned that parts of the proposed regulations were overly broad or ambiguous and would increase the regulatory burden on the industry and possibly compromise confidential business information. Four commenters were opposed to the rule, stating that it was unnecessary and that APHIS had underestimated the regulatory burden that would be imposed on the industry. The remaining three commenters neither supported nor opposed the rule, but instead either asked for clarification of certain aspects of the proposed rule or suggested alternative wording that they believed would provide greater clarity.

In response to these comments, we believe it is necessary to clarify those provisions that could be subject to multiple interpretations and to provide more specifics concerning the information that should be included in adverse event reports associated with the use of veterinary biologics that are submitted to the Agency. Therefore, we are withdrawing the January 15, 2002, proposed rule referenced above and are replacing it with the proposed changes described in this document. The proposed recordkeeping and reporting requirements regarding adverse events that would apply to each licensee, permittee, and foreign establishment that prepares and distributes biological products are described below.

Definitions

The regulations in 9 CFR part 101 contain definitions of terms used in the regulations concerning veterinary biologics. The proposed changes to part 116 of the regulations would make it necessary for us to add definitions in § 101.2 for two terms used in the proposed regulations: *Adverse event* and *adverse event report*. We would define *adverse event* as any observation in animals, whether or not the cause of the event is known, that is unfavorable and unintended and that occurs after any use (on or off label) of a biological product. For products administered to animals, this would include events related to a suspected lack of expected efficacy. For products intended to diagnose disease, adverse events would refer to anything that hinders discovery of the correct diagnosis. We would define *adverse event report* as a communication concerning the occurrence of an adverse event from an identifiable first-hand reporter that includes at least the following information: An identifiable reporter; an identifiable animal; an identifiable biological product; and one or more adverse events.

Adverse Event Records

In this document we are proposing to add to the regulations a new § 116.9 for adverse event records, reports, and summary reports. New § 116.9 would require licensees and permittees to record reports of all adverse events that they receive concerning the use of biological products they produce or distribute and to submit a summary of such reports to APHIS on an annual (for products licensed for more than 1 year) or semiannual (for products licensed less than 1 year) basis. For each event, licensees and permittees would be required to record the following information: (1) The date of the report; (2) the identification of the person initiating the report; (3) the product code number as it appears on the product license or permit and the product trade name; (4) the product serial number(s), if available; (5) a description of the adverse event; (6) a description of the animal(s) involved in the event, including the number dead, number affected, number exposed to the product, species, breed, age, sex, and physiological status; (7) the opinion of the person reporting the event as to whether the event is product-related (*i.e.*, probable, possible, unknown, unlikely, no assessment); (8) route and site of vaccination for products administered parenterally; (9) identity of the person administering the product (veterinarian, animal owner, other, unknown); (10) the date the event occurred; and (11) the outcome of the event (recovered, death, euthanized, alive with side effects, ongoing event).

Summary Reports

We are proposing to require that licensees and permittees submit to APHIS a summary report of all adverse event reports received during the reporting period. For products licensed for 1 year or more, the summary report would have to be submitted at 12-month intervals; for newly licensed products, a summary report would have to be submitted at 6-month intervals during the first year of the product license and at 12-month intervals thereafter. For new products, we had considered an alternative proposal that would also have allowed summary reports for new products to also be submitted every 12 months. However, we believe that more frequent reporting for new products will enable us to identify trends more quickly and thereby resolve any problems sooner. We specifically request that you comment on the merit of 6-month as compared to 12-month reporting of adverse events concerning new products.

The summary report would have to include the following information: (1) The name, address, and U.S. Veterinary License or Permit number of the producer or permittee; (2) copies of any individual adverse event report record(s); and (3) the number of doses, or the average number of doses, of the product in distribution channels, if available. For products licensed for 1 year or more, firms would be allowed 1 year after the effective date of the final rule to come into compliance with the proposed amendment and submit their first summary report, with subsequent summary reports being submitted at 12-month intervals thereafter. For the reasons explained above, the first summary report for newly licensed products would have to be submitted 6 months after the effective date of the final rule and a second report submitted 6 months later, after which summary reports would have to be submitted at 12-month intervals. We would require all summary reports to be received by APHIS within 60 days after the reporting date (semiannual or annual, as the case may be) that would be established by the licensee or permittee and approved by APHIS.

We would require the submission of summary reports at 12-month intervals (6-month intervals for new products) because we believe that frequent reporting of adverse events concerning veterinary biologicals would ensure that

we have adequate data to support a decision, if necessary, to take regulatory action against products that are associated with an unusual number of adverse event reports.

In order to provide an objective measure of when it may be necessary to take action against a veterinary biologic to limit harm in animals, and as a component of the adverse event reporting system, we would use the number of doses of product distributed or the average number of doses of the product in distribution channels, if available, instead of the number of doses of product administered to animals to calculate the incidence of adverse events associated with a particular product. Typically, the number of doses of product administered to animals would be used to calculate incidence. However, because we must take timely action and may not know precisely how many animals have been treated with a product, we would use the number of distributed doses of a product as representative of the number of doses that were administered to animals.

Completion of Records

The regulations in §§ 116.1(a)(3) and 116.8 provide that all records (other than disposition records) required under part 116 shall be completed by the licensee, permittee, or foreign manufacturer before any portion of a serial of any product may be marketed in the United States or exported. We are proposing to amend those provisions to also allow adverse event records to be excluded from the list of records that must be completed before a product may be marketed or exported. Like disposition records, adverse event records could not be expected to have been completed prior to the marketing or exportation of a product.

Miscellaneous

We would also make several minor, nonsubstantive editorial changes to the regulations to improve their clarity.

Executive Order 12866 and Regulatory Flexibility Act

This rule has been reviewed under Executive Order 12866. The rule has been determined to be significant for purposes of Executive Order 12866, and, therefore, has been reviewed by the Office of Management and Budget.

We are proposing to amend the Virus-Serum-Toxin Act regulations for records and reports to require veterinary biologics licensees and permittees to record and submit reports to APHIS concerning adverse events associated with the use of veterinary biologics that they produce or distribute. The proposed regulations would specify the information to be included in adverse event records and would require the submission, at 12-month intervals (6-month intervals for new products), of summary reports that would include, among other things, compilations of individual adverse event records and information concerning the number of doses, or the average number of doses, of the product in distribution channels, if available. These proposed requirements would assist us in providing complete and accurate information concerning adverse reactions or other problems associated with the use of licensed veterinary biologics.

For this rule, we have prepared an economic analysis. The economic analysis provides a cost-benefit analysis as required by Executive Order 12866, as well as an analysis of the potential economic effects of this proposed rule on small entities, as required under the Regulatory Flexibility Act. The economic analysis is set forth below.

We do not expect that the proposed recordkeeping requirements would have a significant economic impact on most veterinary biologics manufacturers. This is because most manufacturers already maintain recordkeeping systems for adverse event reports that capture most, if not all, of the information that would be required to be recorded under the proposal. The information that would be required is basic in nature; it is the type of information that most manufacturers record anyway, in order to improve their product or reduce their potential legal liability. Furthermore, the proposed regulations would not restrict manufacturers from using their discretion to choose the most appropriate recordkeeping system for maintaining records of these reports; the proposal, therefore, should not result in veterinary biologics manufacturers having to alter their current recordkeeping systems or create new recordkeeping systems. It should also be noted that the vast majority of licensed products are not likely to be associated with adverse events. It is estimated, for example, that reports of adverse events are received for no more than 10 percent of the approximately 2,000 currently licensed products.

The proposed requirement for the submission of summary reports to APHIS should not have a significant economic impact on most veterinary biologics manufacturers. As indicated above, most manufacturers already maintain recordkeeping systems for adverse event reports that capture most, if not all, of the information that would be required to be recorded under the proposal. For most manufacturers that receive adverse reports, therefore, the proposed requirement for the submission of annual summary reports to APHIS should involve no more than packaging and assembling information that has already been captured, a task that should have only minimal economic consequences. The current regulations do not require veterinary biologics licensees or permittees to report to APHIS on the number of doses of each licensed or permitted product that has been distributed, but that information, too, is currently being captured by most manufacturers.

Effect on Small Entities

The proposed rule would affect all of the approximately 125 U.S. veterinary biologics manufacturers, including permittees. This is because, at the present time, none of the licensees and permittees is in full compliance with the proposed requirements on a voluntary basis; they would all have to take at least some additional action, even if that additional action simply involved establishing a formal system for recording adverse event reports that they receive.

We do not have definitive information on the size of all potentially affected entities. However, it is reasonable to assume that most are small in size, under the U.S. Small Business Administration's (SBA) standards. This assumption is based on composite data for providers of the same and similar services in the United States. In 2002, there were 296 U.S. establishments in North American Industry Classification System (NAICS) subsector 325414, a classification comprised of establishments primarily engaged in manufacturing vaccines, toxoids, blood fractions, and culture media of plant or animal origin (except diagnostic). Of the 296 establishments, 285 (or 96 percent) had fewer than 500 employees, the SBA's small entity threshold for establishments in that NAICS category. Similarly, in 2002, there were 236 U.S. establishments in NAICS 325413, a classification comprised of establishments primarily engaged in manufacturing in-vitro diagnostic substances, including biological substances. Of the 236 establishments, 223 (or 95 percent) had fewer than 500 employees, the SBA's small entity threshold for establishments in NAICS 325413.

Alternatives

Alternatives to the proposed rule would be to either leave the regulations unchanged, or to require a different set

of criteria than is proposed. Leaving the regulations unchanged would be unsatisfactory, because it would perpetuate the current situation, *i.e.*, one that may not allow APHIS to take expeditious action to limit the harm to animals caused by harmful or dangerous veterinary biologics. The current regulations have resulted in licensees and permittees using non-standardized methods to record and submit reports regarding adverse events to APHIS. In addition, adverse event reports that may signal problems concerning the use of veterinary biological products are not all being submitted to APHIS in a timely manner. Without complete information and timely reports, APHIS may not be able to take prompt action to limit the harm to animals posed by unsatisfactory veterinary biologics.

APHIS considers the proposed set of criteria to be the minimum necessary to accomplish the rule's objectives. The submission of reports to APHIS at longer than 12-month intervals was considered but rejected; we believe that longer reporting intervals would not ensure that we have adequate data to support a decision to take regulatory action against products that are associated with an unusual number of adverse event reports.

Costs and Benefits

The proposed rule has the potential to benefit animals and their owners, to the extent that it allows APHIS to act quickly to limit the harm to animals posed by unsatisfactory veterinary biologics. For animal owners, the monetary benefits are difficult to estimate, because they would depend on several factors that are currently unknown—the significance, or gravity, of the harm that would be avoided with the rule in effect, and the number, and value, of animals that would avoid harm with the rule in effect. For some animal owners, especially those with large numbers of high-value animals, the potential monetary benefits of avoided harm could be large. For the reasons discussed above, manufacturer costs to comply with the rule should be minimal in most cases. Thus, we expect that the benefits of this proposed action would outweigh its costs.

Under these circumstances, the Administrator of the Animal and Plant Health Inspection Service has determined that this action would not have a significant economic impact on a substantial number of small entities.

Executive Order 12372

This program/activity is listed in the category of Federal Domestic Assistance under No. 10.025 and is subject to Executive Order 12372, which requires intergovernmental consultation with State and local officials. (See 7 CFR part 3015, subpart V.)

Executive Order 12988

This proposed rule has been reviewed under Executive Order 12988, Civil Justice Reform. It is not intended to have retroactive effect. This rule would not preempt any State or local laws, regulations, or policies unless they present an irreconcilable conflict with this rule. The Virus-Serum-Toxin Act does not provide administrative procedures which must be exhausted prior to a judicial challenge to the provisions of this rule.

Paperwork Reduction Act

In accordance with section 3507(d) of the Paperwork Reduction Act of 1995 (44 U.S.C. 3501 *et seq.*), the information collection or recordkeeping requirements included in this proposed rule have been submitted for approval to the Office of Management and Budget (OMB). The information collection and recordkeeping requirements described in the January 2002 proposed rule withdrawn by this document were approved by OMB under control number 0579–0209, and we will request that OMB approve the information collection or recordkeeping requirements included in this proposed rule under that same number. Please send written comments to the Office of Information and Regulatory Affairs, OMB, Attention: Desk Officer for APHIS, Washington, DC 20503. Please state that your comments refer to Docket No. 00–071–2. Please send a copy of your comments to: (1) Docket No. 00–071–2, Regulatory Analysis and Development, PPD, APHIS, Suite 3C03, 4700 River Road Unit 118, Riverdale, MD 20737–1238, and (2) Clearance Officer, OCIO, USDA, room 404–W, 14th Street and Independence Avenue SW., Washington, DC 20250. A comment to OMB is best assured of having its full effect if OMB receives it within 30 days of publication of this proposed rule.

This proposed rule would require manufacturers of veterinary biological products to maintain records of adverse event reports that they receive concerning the use of veterinary biological products that they produce or distribute for 2 years. In addition, licensees and permittees would have to submit summary reports of adverse events to APHIS every 12 months for products licensed for 1 year or more; for newly licensed products, a summary report would have to be submitted at 6-month intervals during the first year of the product license and at 12-month intervals thereafter. These information collection and recordkeeping requirements would allow us to monitor and provide the appropriate level of regulatory oversight.

We are soliciting comments from the public (as well as affected agencies) concerning our proposed information collection and recordkeeping requirements. These comments will help us:

(1) Evaluate whether the proposed information collection is necessary for the proper performance of our agency's functions, including whether the information will have practical utility;

(2) Evaluate the accuracy of our estimate of the burden of the proposed information collection, including the validity of the methodology and assumptions used;

(3) Enhance the quality, utility, and clarity of the information to be collected; and

(4) Minimize the burden of the information collection on those who are to respond (such as through the use of appropriate automated, electronic, mechanical or other technological collection techniques or other forms of information technology, *e.g.*, permitting electronic submission of responses).

Estimate of burden: The public reporting burden for this collection of information is estimated to average 0.5 hour per response.

Respondents: Veterinary biologics licensees and permittees.

Estimated annual number of respondents: 125.

Estimated annual number of responses per respondent: 4.

Estimated annual number of responses: 1,000.

Estimated total annual burden on respondents: 500 hours. (Due to averaging, the total annual burden hours may not equal the product of the annual number of responses multiplied by the reporting burden per response.)

Copies of this information collection can be obtained from Mrs. Celeste Sickles, APHIS' Information Collection Coordinator, at (301) 734–7477.

Government Paperwork Elimination Act Compliance

The Animal and Plant Health Inspection Service is committed to compliance with the Government Paperwork Elimination Act (GPEA), which requires Government agencies in general to provide the public the option of submitting information or transacting business electronically to the maximum extent possible. For information pertinent to GPEA compliance related to this proposed rule, please contact Mrs.

Celeste Sickles, APHIS' Information Collection Coordinator, at (301) 734–7477.

List of Subjects

9 CFR Part 101

Animal biologics.

9 CFR Part 116

Animal biologics, Reporting and recordkeeping requirements.

Accordingly, we propose to amend 9 CFR parts 101 and 116 as follows:

PART 101—DEFINITIONS

1. The authority citation for part 101 would continue to read as follows:

Authority: 21 U.S.C. 151–159; 7 CFR 2.22, 2.80, and 371.4.

2. In § 101.2, definitions of *adverse event* and *adverse event report* would be added in alphabetical order to read as follows:

§ 101.2 Administrative terminology.

* * * * *

Adverse event. Any observation in animals, whether or not the cause of the event is known, that is unfavorable and unintended and that occurs after any use (off label or on label) of a biological product. Included are events related to a suspected lack of expected efficacy. For products intended to diagnose disease, adverse events refer to anything that hinders discovery of the correct diagnosis.

Adverse event report. Any communication concerning the occurrence of an adverse event from an identifiable first-hand reporter which includes at least the following information:

(1) An identifiable reporter;

(2) An identifiable animal;

(3) An identifiable biological product; and

(4) One or more adverse events.

* * * * *

PART 116—RECORDS AND REPORTS

3. The authority citation for part 116 would continue to read as follows:

Authority: 21 U.S.C. 151–159; 7 CFR 2.22, 2.80, and 371.4.

4. In § 116.1, paragraph (a)(3) would be revised to read as follows:

§ 116.1 Applicability and general considerations.

(a) * * *

(3) Records (other than disposition records and adverse event records) required by this part must be completed by the licensee, permittee, or foreign manufacturer, as the case may be, before any portion of a serial of any product may be marketed in the United States or exported.

* * * * *

5. Section 116.8 would be revised to read as follows:

§ 116.8 Completion and retention of records.

All records (other than disposition records and adverse event records) required by this part must be completed by the licensee, permittee, or foreign manufacturer before any portion of a serial of any product may be marketed in the United States or exported. All records must be retained at the licensed or foreign establishment or permittee's place of business for a period of 2 years after the expiration date of a product or longer as may be required by the Administrator. (Approved by the Office of Management and Budget under control number 0579–0013)

6. A new § 116.9 would be added to read as follows:

§ 116.9 Adverse event report records and summary reports.

(a) A detailed record must be maintained for every adverse event report the licensee or permittee receives for any biological product it produces or distributes. Each record must include:

(1) The date of the report;

(2) The identification of the person initiating the report;

(3) The product code number as it appears on the product license or permit, and product trade name;

(4) The serial number(s) of the product, if available;

(5) A description of the adverse event;

(6) A description of the animal(s) involved, including the number dead, number affected, number exposed to the product, species, breed, age, sex, and physiological status;

(7) The opinion (probable, possible, unknown, unlikely, no assessment) of the person initiating the report as to whether the event is product-related;

(8) The route and site of vaccination for products administered parenterally;

(9) The identity of the person administering the product (veterinarian, animal owner, other, unknown);

(10) The date of the event; and

(11) The outcome of the event (recovered, death, euthanized, alive with side effects, ongoing event).

(b) A summary report of all adverse event reports received by a licensee or permittee must be compiled and submitted to the Animal and Plant Health Inspection Service. For products licensed for 1 year or more, such summary reports must cover intervals of 12 months; for products licensed for less than 1 year, the summary reports must be submitted at 6-month intervals. All summary reports must be received within 60 days after the end of the reporting date that will be determined by the licensee or permittee and approved by the Animal and Plant Health Inspection Service. Each summary report must include:

(1) The name, address, and U.S. Veterinary License or Permit number of the producer, permittee, or foreign manufacturer;

(2) Copies of any individual adverse event reports for the product maintained as prescribed in paragraph (a) of this section; and

(3) The number of doses, or the average number of doses, of the product in distribution channels, if available.

Done in Washington, DC, this 11th day of August 2005.

Bill Hawks,

Under Secretary for Marketing and Regulatory Programs.

[FR Doc. 05–16266 Filed 8–16–05; 8:45 am]

BILLING CODE 3410–34–P

NUCLEAR REGULATORY COMMISSION

10 CFR Part 51

[Docket No. PRM–51–8]

State of Nevada; Denial of a Petition for Rulemaking

AGENCY: Nuclear Regulatory Commission.

ACTION: Petition for rulemaking: denial.

SUMMARY: The U.S. Nuclear Regulatory Commission (NRC or Commission) is denying a petition for rulemaking submitted by the State of Nevada (PRM–51–8). The petitioner requests that NRC amend a decision reached in a 1990 rulemaking, referred to as the ''Waste Confidence'' decision, that at least one mined geologic repository will be available within the first quarter of the twenty-first century as well as a regulation making a generic determination of no significant environmental impact from the temporary storage of spent fuel after cessation of reactor operation which incorporates this decision. Petitioner believes that the decision and rule must be amended to avoid ''prejudging'' the outcome of the anticipated licensing proceeding on a potential application from the Department of Energy for a construction authorization for a geologic repository at the Yucca Mountain, Nevada site. The NRC is denying the petition because the petition

fundamentally misconstrues the decision NRC reached in 1990 and because the information provided in the petition does not meet the criteria NRC set in 1999 for reopening the Waste Confidence findings. Further, the Commission's commitment to a fair and comprehensive adjudication on a potential license application for Yucca Mountain is not jeopardized by the 2025 date for repository availability. Under these circumstances, the Commission finds no reason to undertake the burden of reopening the Waste Confidence decision.

ADDRESSES: Copies of the petition for rulemaking and the NRC's letter to the petitioner are available for public inspection or copying in the NRC Public Document Room, 11555 Rockville Pike, Room 01–F21, Rockville, Maryland.

FOR FURTHER INFORMATION CONTACT: Keith I. McConnell, Office of the General Counsel, U.S. Nuclear Regulatory Commission, Washington, DC 20555–0001, telephone (301) 415–1743, e-mail: *kim@nrc.gov;* or E. Neil Jensen, Office of the General Counsel, U.S. Nuclear Regulatory Commission, Washington, DC 20555–00001, telephone (301) 415–1537, e-mail: *enj@nrc.gov.*

SUPPLEMENTARY INFORMATION:

Introduction

On March 1, 2005, the State of Nevada (Petitioner or the State) submitted a ''State of Nevada Petition for Rulemaking to Amend the Commission's Waste Confidence Decision and Rule to Avoid Prejudging Yucca Mountain'' (Petition) which was docketed as a petition for rulemaking under 10 CFR 2.802 of the Commission's regulations (PRM–51–8). Petitioner asserts that the NRC must amend a decision reached in a 1990 rulemaking, termed the ''Waste Confidence'' decision,[1] that ''at least one mined geologic repository will be available within the first quarter of the twenty-first century'' as well as a regulation, 10 CFR 51.23(a), which incorporates this decision.[2] Petitioner believes that the decision and rule must be amended to avoid ''prejudging'' the outcome of the anticipated licensing proceeding on a potential application from the Department of Energy (DOE) for a construction authorization for a geologic repository at the Yucca Mountain, Nevada site (Yucca Mountain).

The Commission sees no need to revisit its Waste Confidence decision at this time. We have carefully considered the State's assertions that changed circumstances warrant reopening of its Waste Confidence findings but, for the reasons described in this decision, we remain unconvinced that there is any present need to resurrect Waste Confidence issues.[3]

Background

To provide context for the petition, some background information on the Commission's Waste Confidence proceedings is useful. In 1984, the Commission concluded a generic rulemaking proceeding, which has become known as the ''Waste Confidence Rulemaking,'' designed to assess its degree of confidence that radioactive wastes produced by nuclear facilities could be safely disposed of, to determine when any such disposal would be available, and whether such wastes could be safely stored until safe disposal was available.[4] The 1984 rulemaking proceeding enabled the Commission to make the following five findings:

(1) that there is reasonable assurance that safe disposal of high-level radioactive waste (HLW) and spent nuclear fuel (SNF) in a mined geologic repository is technically feasible;

(2) that there is reasonable assurance that one or more mined geologic repositories for commercial HLW and SNF will be available by the years 2007–2009, and that sufficient repository capacity will be available within 30 years beyond expiration of any reactor operating license to dispose of existing commercial HLW and SNF originating in such reactor and generated up to that time;

(3) that there is reasonable assurance that HLW and SNF will be managed in a safe manner until sufficient repository capacity is available to assure the safe disposal of all HLW and SNF;

(4) that there is reasonable assurance that, if necessary, spent fuel generated in any reactor can be stored safely and without significant environmental impacts for at least 30 years beyond the expiration of that reactor's operating licenses at that reactor's spent fuel storage basin, or at either onsite or offsite independent spent fuel storage installations (ISFSIs); and

(5) that there is reasonable assurance that safe independent onsite or offsite spent fuel storage will be made available if such storage capacity is needed.

49 FR 34659–34960. The Commission incorporated the second and fourth findings into a new regulation at 10 CFR 51.23 which, among other things, established a generic determination of no significant environmental impact from the temporary storage of spent fuel after the cessation of reactor operation and which also found reasonable assurance that one or more mined geologic repositories for commercial HLW and SNF would be available by the years 2007–2009.[5] The Commission also committed to reviewing its Waste Confidence findings should significant and pertinent unexpected events occur or at 5-year intervals until a repository was available. 49 FR 34660.

In 1989–1990, the Commission conducted a second Waste Confidence proceeding to review its 1984 findings. As a result, the Commission decided to modify findings two and four as follows:

(2) the Commission finds reasonable assurance that at least one mined geologic repository will be available within the first quarter of the twenty-first century, and that sufficient repository capacity will be available within 30 years beyond the licensed life for operation (which may include the term of a revised or renewed license) of any reactor to dispose of the commercial HLW and SNF originating in such reactor and generated up to that time;

(4) the Commission finds reasonable assurance that, if necessary, spent fuel generated in any reactor can be stored safely and without significant environmental impacts for at least 30 years beyond the licensed life for operation (which may include the term of a revised or renewed license) of that reactor at its spent fuel storage basin, or at either onsite or offsite ISFSIs.

55 FR 38474 (emphasis added). Thus, the Commission, in 1990, decided to extend the time-frame of its assurance of the availability of a repository from the 2007–2009 period to 2025, and also expanded on the minimal amount of time for which it had confidence that SNF could be safely stored. Further, ''believ[ing] that predictions of

[1] *See* ''Waste Confidence Decision Review,'' 55 FR 38474; September 18, 1990.

[2] *See* ''Consideration of Environmental Impacts of Temporary Storage of Spent Fuel After Cessation of Reactor Operation,'' 55 FR 38472; September 18, 1990.

[3] The NRC did not seek public comment on the instant petition. In this case, the NRC viewed Nevada's petition as involving a straightforward application of the Commission's threshold criterion (''significant and pertinent unexpected events occur, raising substantial doubt about the continuing validity of the 1990 Waste Confidence finding'' 64 FR 68005; December 6, 1990) for considering a comprehensive reopening of the 1990 Waste Confidence decision, and did not see a need for public comment on such application.

[4] *See* ''Waste Confidence Decision,'' 49 FR 34658; August 31, 1984.

[5] *See* ''Requirements for Licensee Actions Regarding the Disposition of Spent Fuel Upon Expiration of Reactor Operating Licenses,'' 49 FR 34688, 34694; August 31, 1984.

repository availability are best expressed in terms of decades rather than years,'' the Commission decided to change its review period to 10 years or ''whenever significant and pertinent unexpected changes occur [, e.g.,] such events as a major shift in national policy, a major unexpected institutional development, and/or new technical information * * *.'' 55 FR 38475.

In 1999, as the 10 year review period approached, the Commission considered the need for a further Waste Confidence review in the context of events that had occurred since 1990. 64 FR 68005; December 6, 1999. These considerations ''confirm[ed] and strengthen[ed] the Commission's 1990 findings and le[d] the Commission to conclude that no significant and unexpected events ha[d] occurred—no major shifts in national policy, no major unexpected institutional developments, no unexpected technical information—that would cast doubt on the Commission's Waste Confidence findings or warrant a detailed reevaluation * * *.'' 64 FR 68007. For that reason, the Commission determined not to conduct another Waste Confidence review at that time but did state that ''the Commission would consider undertaking a comprehensive reevaluation of the Waste Confidence findings when the impending repository development and regulatory activities run their course or if significant and pertinent unexpected events occur, raising substantial doubt about the continuing validity of the Waste Confidence findings.'' *Id.*

The Petition

The State's petition focuses on the second Waste Confidence finding and, in particular, on that aspect of the finding that there is reasonable assurance that a repository will be available by 2025. The petitioner believes that this finding must be revised because it is now evident that a repository can only be available by this date if NRC grants DOE's anticipated application for a license at the Yucca Mountain site at the completion of the adjudicatory proceeding because it would be too late, if NRC were to deny the license application, for DOE to have a repository available at a different site by this date. Petition at 2–3. This situation, in petitioner's view, impermissibly amounts to prejudging the result of the Yucca Mountain licensing proceeding. *Id.*

In support of its position, petitioner reviews the 1990 Waste Confidence decision and concludes that it relies on three ''critical determinations'' which petitioner describes as follows:

(1) The acceptability of the Yucca Mountain site should not be presumed, for to do so would prejudge the outcome of the NRC's licensing review and proceeding;

(2) Notwithstanding the twenty-five year lead time required, a second repository site will be available if necessary by the year 2025 because a final decision on the acceptability of the Yucca Mountain site will surely be made by the year 2000, leaving sufficient time (twenty five years) to develop another repository if Yucca Mountain fails; and (3) spent fuel can be stored safely and in an environmentally sound manner until either Yucca Mountain or a second repository becomes available beginning in the year 2025.

Petition at 7. Petitioner says that the second ''critical determination'' has proved to be incorrect, thus requiring the Commission to revise its second Waste Confidence finding.

In its 1990 Waste Confidence decision, the Commission concluded that SNF can be safely stored without significant environmental impact for at least 100 years, if necessary. 55 FR 38513 (1990). Petitioner cites recent documents and events which have corroborated and even extended this conclusion such as DOE's Final Environmental Impact Statement for Yucca Mountain and the increased licensing of independent spent fuel storage installations. Petition at 11–13. Petitioner concludes that these developments support extending the second part of the second Waste Confidence finding (that sufficient repository capacity will be available within 30 years beyond the licensed life for operation (which may include the term of a revised or renewed license) of any reactor to dispose of the commercial HLW and SNF originating in such reactor and generated up to that time) to a longer or even indefinite period. Petition at 13. Thus, petitioner proposes that the regulation which encapsulates the second Waste Confidence finding, 10 CFR 51.23(a), be amended to provide:

The Commission has made a generic determination that there is reasonable assurance all licensed reactor spent fuel will be removed from storage sites to some acceptable disposal site well before storage causes any significant safety or environmental impacts.

This generic finding does not apply to a reactor or storage site if the Commission has found, in the 10 CFR part 50, part 52, part 54 or part 72 specific licensing proceeding, that storage of spent fuel during the term requested in the license application will cause significant safety or environmental impacts.

Petition at 14.

Reasons for Denial

In 1999, the Commission stated that it would consider undertaking a comprehensive reevaluation of the Waste Confidence findings if either of two criteria were met: (1) ''When the impending repository development and regulatory activities run their course;'' or (2) ''if significant and pertinent unexpected events occur, raising substantial doubt about the continuing validity of the Waste Confidence findings.'' 64 FR 68007. Petitioner states that it is not asking NRC to reopen its general finding that one or more safe geologic repositories can be made available on a timely basis. Petition at 7. Nevertheless, because the findings are interrelated, reopening the Waste Confidence inquiry, even if somehow limited in this manner, could be expected to become a large endeavor covering most of the questions considered in the 1990 findings; *e.g.*, multiple questions concerning the timeliness of repository availability and conditions for the extended safe storage of SNF. In 1999, the Commission was reluctant to expend agency resources on such a far-reaching endeavor absent developments which might cast doubt on the Commission's findings. Barring developments or information meeting the 1999 criteria, the Commission remains unwilling to initiate a reevaluation, even a severely limited one assuming that would be possible, because that would not be a prudent use of the agency's limited resources. As noted below, the Commission does not believe that petitioner has demonstrated that significant and pertinent unexpected events have occurred, meeting the Commission's reopening criteria.

Petitioner seeks to meet the second prong of these criteria by arguing that two pieces of information constitute the ''significant and pertinent unexpected events'' which should trigger the Waste Confidence review process. First, petitioner asserts that NRC's determination that a repository would be available by 2025 was based on the ''express finding'' that the ''acceptability'' of Yucca Mountain as a geologic repository would be decided by the year 2000, but that ''we now know that the acceptability of Yucca Mountain will not be decided before 2010 at the earliest (completion of the construction authorization stage).'' Petition at 7–8. Second, petitioner asserts that the availability of a repository by 2025 assumed a 25-year

period would be needed between a possible finding of unacceptability of the Yucca Mountain site in 2000 and the availability of a repository at a different site, but we ''now know that if Yucca Mountain fails on or about the year 2010, fifteen years * * * will not nearly be sufficient time to accomplish all of the steps needed to make another repository actually available.'' Petition at 8–10.

First, we consider petitioner's assertion that the Commission's 1990 determination that a repository would be available by 2025 was based on an ''express finding'' that the acceptability of Yucca Mountain as a geologic repository would be decided by the year 2000. The Commission made no such finding, express or otherwise. What the Commission did state in the 1990 decision was that ''NRC continues to believe that if DOE determines that the Yucca Mountain site is unsuitable, it will make this determination by about the year 2000.'' 55 FR 38477 (emphasis added). There is a significant difference, in the Waste Confidence decision, between the concept of the ''suitability'' of Yucca Mountain and the concept of the ''acceptability'' of Yucca Mountain.

''Suitability'' refers to the decision the Secretary of Energy must make, on the basis of site characterization activities and other factors, that a particular site is suitable for submission of an application for a construction authorization for a repository. *See* section 113 of the Nuclear Waste Policy Act of 1982, as amended (NWPA), 42 U.S.C. 10133. Upon finding a particular site to be suitable, the Secretary is required to make a recommendation to the President that the President approve the recommended site for the development of a repository. See section 114 of NWPA, 42 U.S.C. 10134.[6]

''Acceptability'' refers to the decisions NRC must make concerning the licenseability of the site. There are three NRC decision points on a determination of the acceptability (or license-ability) of Yucca Mountain: the first will be the decision of the NRC staff in the licensing proceeding on whether to recommend approval of the license application; the second will be when the Commission, acting in its adjudicatory capacity, determines whether to issue a construction authorization for the repository, see 10 CFR 63.31; and the third will be when the Commission determines whether to issue a license for the receipt and possession of high-level waste, see 10 CFR 63.41. But, to be clear, these considerations as to a site's ''acceptability'' were not the basis for deciding on the 2025 date.

It is important to examine what NRC actually said in the 1990 Waste Confidence decision with respect to its revision of the second finding because petitioner confuses the concepts of ''suitability'' and ''acceptability'' and fundamentally misperceives the second finding. The Nuclear Waste Policy Amendments Act of 1987 (NWPAA) had limited DOE's site characterization activities to the Yucca Mountain site. In the Commission's view, ''the possible schedular benefits to single-site characterization * * * must be weighed for the purposes of this Finding against the potential for additional delays in repository availability *if the Yucca Mountain site is found to be unsuitable* [because b]y focusing DOE site characterization activities on Yucca Mountain, the NWPAA ha[d] essentially made it necessary for that site to be found *suitable* if the 2007–2009 timeframe for repository availability in the Commission's 1984 decision is to be met'' *(emphasis added)*. 55 FR 38494. This was because DOE had estimated conservatively that ''it would require approximately 25 years to begin site screening for a second repository, perform site characterization, submit an EIS and license applications, and await authorizations before the repository could be ready to receive waste.'' *Id.* Obviously, any DOE finding of unsuitability made after 1990 would not allow an alternative repository site to be available in the 2007–2009 timeframe if 25 years were to be required for this purpose. Moreover, in addition to reliance on a single site, other factors raised doubts that a repository would be available in that time period: the probability that site characterization activities would not proceed entirely without problems; the history of DOE's schedular slippages; and DOE's own then-current schedule calling for submittal of a license application in 2001 and for repository availability in 2010. *Id.*

In light of these considerations, it no longer seemed prudent to the Commission in 1990 to reaffirm NRC's 1984 finding of reasonable assurance that the 2007–2009 timetable would be met. Instead, the Commission decided to take DOE's estimate of the time it would take to make another repository available if Yucca Mountain were to be found unsuitable (25 years) and then, for the sake of conservatism, make the assumption that Yucca Mountain would not be found suitable. The Commission thought it ''reasonable to expect that DOE would be able to reach this conclusion by the year 2000 [which] would leave 25 years for the attainment of repository operations at another site.'' 55 FR 38495. Thus, the ''express finding'' that the Commission made in 1990 was that the suitability (not the acceptability) of Yucca Mountain would be decided by the year 2000, leaving 25 years for the availability of a different repository if DOE found Yucca Mountain to be unsuitable.

That DOE in fact found the Yucca Mountain site to be suitable—in early 2002—buttresses the 1990 finding of reasonable assurance that a repository will be available in 2025, within the meaning of our 1990 Waste Confidence decision. That decision rested on a DOE suitability determination by ''about'' 2000. *See* 55 FR 38477. DOE made such a determination in early 2002, and thus substantially met our expectation.

Given what the Commission actually said in its 1990 Waste Confidence finding, it is easy to see that the significant new information regarding the timing of a repository proferred by petitioner; *i.e.*, that the acceptability (defined in the petition as completion of the construction authorization stage) of Yucca Mountain will not be decided before 2010 at the earliest and that if Yucca Mountain is found to be unacceptable around the year 2010, 15 years will not be sufficient time for DOE to make another repository available, petition at 8, is not the type of information that would meet the Commission's criteria for reopening. The Commission did not speculate in 1990 as to a date by which it might make a decision on construction authorization; its finding was based solely on its estimate of when DOE might make a suitability determination.

The petition assumes that the NRC, in 1990, abandoned its expectation that a repository would become available in the 2007–2009 time frame and selected a new date, 2025, out of a concern that the continued use of the 2007–2009 period for repository availability would ''prejudge'' its construction authorization decision. Petition at 10. This, too, is an error.

''Availability,'' as used in the 1990 decision, begins with a DOE projection of when a repository is targeted for

[6] On February 14, 2002, the Secretary of Energy recommended the Yucca Mountain site for the development of a repository to the President, thereby setting in motion the approval process set forth in sections 114 and 115 of the NWPA. *See* 42 U.S.C. 10134(a)(1); 10134(a)(2); 10135(b), 10136(b)(2). On February 15, 2002, the President recommended the site to Congress. On April 8, 2002, the State of Nevada submitted a notice of disapproval of the site recommendation to which Congress responded, on July 9, 2002, by passing a joint resolution approving the development of a repository at Yucca Mountain which the President signed on July 23, 2002. See Pub. L. No. 107–200, 116 Stat. 735 (2002) (codified at 42 U.S.C. 10135 note (Supp. IV 2004).

availability based on DOE's estimates of the timing of the suitability determination. 55 FR 38494. These DOE projections were used by the Commission as a starting point for determining ''availability.'' But, because of DOE's need to focus exclusively on Yucca Mountain, the probability that site characterization activities would not proceed entirely without problems, and the chronic delays in the program, the Commission was unwilling to accept DOE's then current projection of repository availability in 2010. Instead, the Commission chose to take a ''conservative'' approach to the timing of ''availability'' by setting a conservative upper bound of 2025. *See* 55 FR 38494, 38595 and 38500. This would allow for DOE's estimate of a 25-year time period needed for the availability of a repository at an alternative site if DOE found the Yucca Mountain site to be unsuitable and had to start over from scratch.

If in 1990 the Commission had been thinking in terms of 25 years being needed for an alternate repository site following an adverse Commission finding of acceptability, obviously it could not have chosen 2025 as the date for which it had reasonable confidence that a repository would be available. DOE's submission of a license application was at that time scheduled to be in 2001, meaning that any Commission rejection of the license could not have been the basis for computing the 25 years needed for evaluation of an alternative site. In fact, the use of a Commission acceptability finding as the basis for repository availability is impossible to implement because it would require the Commission to prejudge the acceptability of any alternative to Yucca Mountain in order to establish a reasonably supported outer date for the Waste Confidence finding. That is, if the Commission were to assume that a license for the Yucca Mountain site might be denied in 2015 and establish a date 25 years hence for the ''availability'' of an alternative repository (*i.e.*, 2040), it would still need to presume the ''acceptability'' of the alternate site to meet that date.

Because it was untenable to presume the ''acceptability'' of any site, including Yucca Mountain, the Commission, in 1990, chose instead to take a two pronged approach to determining ''availability.'' First, it would use DOE's statutorily mandated suitability determination as a basis for providing assurance that a repository would be available in 2025. Specifically, the Commission stated that it believed that DOE's site suitability determination process should provide a ''* * * strong basis for evaluating the likelihood of meeting the 2025 estimate of repository availability.'' 55 FR 38495. Second, the Commission allowed for reconsideration of its findings pending significant and unexpected events. Certainly, the denial of a license for the Yucca Mountain site would meet these criteria and the Commission would need to reevaluate its findings at that time.

The State would recast the approach the Commission took to defining ''availability'' by presuming that ''some acceptable disposal site'' would be available at some undefined time in the future. We find this approach inconsistent with that taken in the 1984 Waste Confidence Decision because it provides neither the basis for assessing the degree of assurance that radioactive waste can be disposed of safely nor the basis for determining when such disposal will be available.

In sum, petitioner has not submitted any information establishing that significant and pertinent unexpected events have occurred which raise substantial doubt about the continuing validity of the second Waste Confidence finding and, in particular, that reasonable assurance exists that at least one mined geologic repository will be available by 2025. Even if DOE's estimate as to when it will tender a license application should slip further, the 2025 date would still allow for unforeseen delays in characterization and licensing. It also must be recognized that the Commission remains committed to a fair and comprehensive adjudication and, as a result, there is the potential for the Commission to deny a license for the Yucca Mountain site based on the record established in the adjudicatory proceeding. That commitment is not jeopardized by the 2025 date for repository availability. The Commission did not see any threat to its ability to be an impartial adjudicator in 1990 when it selected the 2025 date even though then, as now, a repository could only become available if the Commission's decision is favorable. Should the Commission's decision be unfavorable and should DOE abandon the site, the Commission would need to reevaluate the 2025 availability date, as well as other findings made in 1990. However, that day has not yet come and until it does the Commission finds no reason to undertake the burden of reopening its Waste Confidence findings in the absence of information meeting the criteria it has established for this purpose.

Conclusion

Petitioner misapprehends the Commission's 1990 Waste Confidence findings and has not shown any significant and pertinent unexpected event that raises substantial doubt about the continuing validity of the 1990 Waste Confidence findings. Accordingly, for the reasons stated above, the NRC denies the petition for rulemaking to amend the Commission's Waste Confidence decision in its entirety.

Dated at Rockville, Maryland, this 10th day of August, 2005.

For the Nuclear Regulatory Commission.

Andrew L. Bates,

Acting Secretary of the Commission.

[FR Doc. 05–16253 Filed 8–16–05; 8:45 am]

BILLING CODE 7590–01–P

DEPARTMENT OF TRANSPORTATION

Federal Aviation Administration

14 CFR Part 39

[Docket No. FAA–2005–21787; Directorate Identifier 2005–CE–34–AD]

RIN 2120–AA64

Airworthiness Directives; Shadin ADC–2000 Air Data Computers

AGENCY: Federal Aviation Administration (FAA), DOT.

ACTION: Notice of proposed rulemaking (NPRM).

SUMMARY: The FAA proposes to adopt a new airworthiness directive (AD) for certain Shadin ADC–2000 air data computers (ADC) installed on airplanes. This proposed AD would require you to replace affected ADC–2000 units with a modified unit. This proposed AD results from reports that certain ADC–2000 units display incorrect altitude information on the Electronic Flight Information System (EFIS) to the pilot. We are issuing this proposed AD to prevent ADC–2000 units, part numbers (P/Ns) 962830A–1–S–8, 962830A–2–S–8, and 962830A–3–S–8, configurations B, C, and D, from displaying incorrect altitude information. This could cause the flight crew to react to this incorrect flight information and possibly result in an unsafe operating condition.

DATES: We must receive any comments on this proposed AD by October 11, 2005.

ADDRESSES: Use one of the following to submit comments on this proposed AD:

- *DOT Docket Web Site:* Go to *http://dms.dot.gov* and follow the instructions

for sending your comments electronically.

- *Government-wide Rulemaking Web Site:* Go to *http://www.regulations.gov* and follow the instructions for sending your comments electronically.
- *Mail:* Docket Management Facility; U.S. Department of Transportation, 400 Seventh Street, SW., Nassif Building, Room PL–401, Washington, DC 20590–001.
- *Fax:* 1–202–493–2251.
- *Hand Delivery:* Room PL–401 on the plaza level of the Nassif Building, 400 Seventh Street, SW., Washington, DC, between 9 a.m. and 5 p.m., Monday through Friday, except Federal holidays.

To get the service information identified in this proposed AD, contact Shadin, 6831 Oxford Street, St. Louis Park, Minnesota 55426–4412; telephone: (800) 388–2849 or (952) 927–6500; facsimile: (952) 924–1111; e-mail: *www.shadin.com*.

To view the comments to this proposed AD, go to *http://dms.dot.gov*. The docket number is FAA–2005–21787; Directorate Identifier 2005–CE–34–AD.

FOR FURTHER INFORMATION CONTACT: Jeffrey Kuen, Aerospace Engineer, Chicago Aircraft Certification Office (ACO), FAA, 2300 East Devon Avenue, Room 107, Des Plaines, Illinois 60018; telephone: (847) 294–7125; facsimile: (847) 294–7834; e-mail address: *jeffrey.kuen@faa.gov*.

SUPPLEMENTARY INFORMATION:

Comments Invited

How do I comment on this proposed AD? We invite you to submit any written relevant data, views, or arguments regarding this proposal. Send your comments to an address listed under **ADDRESSES.** Include the docket number, ''FAA–2005–21787; Directorate Identifier 2005–CE–34–AD'' at the beginning of your comments. We will post all comments we receive, without change, to *http://dms.dot.gov*, including any personal information you provide. We will also post a report summarizing each substantive verbal contact with FAA personnel concerning this proposed rulemaking. Using the search function of our docket Web site, anyone can find and read the comments received into any of our dockets, including the name of the individual who sent the comment (or signed the comment on behalf of an association, business, labor union, etc.). This is docket number FAA–2005–21787; Directorate Identifier 2005–CE–34–AD. You may review the DOT's complete Privacy Act Statement in the **Federal Register** published on April 11, 2000 (65 FR 19477–78) or you may visit *http://dms.dot.gov*.

Are there any specific portions of this proposed AD I should pay attention to? We specifically invite comments on the overall regulatory, economic, environmental, and energy aspects of this proposed AD. If you contact us through a nonwritten communication and that contact relates to a substantive part of this proposed AD, we will summarize the contact and place the summary in the docket. We will consider all comments received by the closing date and may amend this proposed AD in light of those comments and contacts.

Docket Information

Where can I go to view the docket information? You may view the AD docket that contains the proposal, any comments received, and any final disposition in person at the DMS Docket Offices between 9 a.m. and 5 p.m. (eastern standard time), Monday through Friday, except Federal holidays. The Docket Office (telephone 1–800–647–5227) is located on the plaza level of the Department of Transportation NASSIF Building at the street address stated in **ADDRESSES.** You may also view the AD docket on the Internet at *http://dms.dot.gov*. The comments will be available in the AD docket shortly after the DMS receives them.

Discussion

What events have caused this proposed AD? We have received reports that the pressure altitude output of certain Shadin ADC–2000 air data computers (ADC) drift outside Technical Standard Order (TSO) tolerance.

Shadin ADC–2000 units, part numbers (P/Ns) 962830A–1–S–8, 962830A–2–S–8, and 962830A–3–S–8, configurations B, C, and D (labeled with TSO–C106 and TSO–C44a), provide altitude information that is displayed on the Electronic Flight Information System (EFIS) to the pilot. The ADC/EFIS combination is used to display primary altitude information to the pilot.

The maximum altitude error allowed by TSO–C106 and TSO–C44a is 25 feet at ground level. Shadin ADC–2000 units, P/Ns 962830A–1–S–8, 962830A–2–S–8, and 962830A–3–S–8, configurations B, C, and D, have shown errors from 100 to 8,000 feet from the correct altitude.

The errors are caused by the ADC–2000 altitude measurement system. A pressure transducer in the ADC measures the altitude from the airplane static pressure system. The pressure transducer converts static pressure to an electrical signal.

We have determined that the electrical output from the pressure transducer in the affected ADCs changes over time resulting in the display of misleading altitude information to the pilot.

What is the potential impact if FAA took no action? If this situation occurs while the flight crew is making critical flight decisions, the display of incorrect altitude information could cause the flight crew to react to this incorrect flight information and possibly result in an unsafe operating condition.

Is there service information that applies to this subject? Shadin has issued Service Bulletin SB28–05–002, Rev C, dated June 29, 2005.

What are the provisions of this service information? The service bulletin includes procedures for doing preflight checks to ensure ADC/EFIS altimetry accuracy and specifies having ADC–2000, P/Ns 962830A–1–S–8, 962830A–2–S–8, and 962830A–3–S–8, configurations B, C, and D, upgraded to new P/Ns 962831A–1–S–8, 962831A–2–S–8, and 962831A–3–S–8.

FAA's Determination and Requirements of this Proposed AD

What has FAA decided? We have evaluated all pertinent information and identified an unsafe condition that is likely to exist or develop on these ADCs that are installed on type design airplanes.

What would this proposed AD require? This proposed AD would require you to incorporate the actions in the previously-referenced service bulletin.

How does the revision to 14 CFR part 39 affect this proposed AD? On July 10, 2002, we published a new version of 14 CFR part 39 (67 FR 47997, July 22, 2002), which governs FAA's AD system. This regulation now includes material that relates to altered products, special flight permits, and alternative methods of compliance. This material previously was included in each individual AD. Since this material is included in 14 CFR part 39, we will not include it in future AD actions.

Costs of Compliance

How many airplanes would this proposed AD impact? We estimate that this proposed AD affects 457 units installed on airplanes in the U.S. registry.

What would be the cost impact of this proposed AD on owners/operators of the affected airplanes? We estimate the following costs to do this proposed modification:

Labor cost	Parts cost	Total cost per unit
2 work hours × $65 per hour = $130	Not applicable	$130.

Shadin will reimburse the owner/operators for labor to remove and replace the ADC and shipping costs to Shadin Repair Facility to the extent specified in the service bulletin.

Authority for This Rulemaking

What authority does FAA have for issuing this rulemaking action? Title 49 of the United States Code specifies the FAA's authority to issue rules on aviation safety. Subtitle I, section 106 describes the authority of the FAA Administrator. Subtitle VII, Aviation Programs, describes in more detail the scope of the agency's authority.

We are issuing this rulemaking under the authority described in subtitle VII, part A, subpart III, section 44701, ''General requirements.'' Under that section, Congress charges the FAA with promoting safe flight of civil aircraft in air commerce by prescribing regulations for practices, methods, and procedures the Administrator finds necessary for safety in air commerce. This regulation is within the scope of that authority because it addresses an unsafe condition that is likely to exist or develop on products identified in this AD.

Regulatory Findings

Would this proposed AD impact various entities? We have determined that this proposed AD would not have federalism implications under Executive Order 13132. This proposed AD would not have a substantial direct effect on the States, on the relationship between the national Government and the States, or on the distribution of power and responsibilities among the various levels of government.

Would this proposed AD involve a significant rule or regulatory action? For the reasons discussed above, I certify that this proposed AD:

1. Is not a ''significant regulatory action'' under Executive Order 12866;
2. Is not a ''significant rule'' under the DOT Regulatory Policies and Procedures (44 FR 11034, February 26, 1979); and
3. Will not have a significant economic impact, positive or negative, on a substantial number of small entities under the criteria of the Regulatory Flexibility Act.

We prepared a summary of the costs to comply with this proposed AD (and other information as included in the Regulatory Evaluation) and placed it in the AD Docket. You may get a copy of this summary by sending a request to us at the address listed under **ADDRESSES**. Include ''AD Docket FAA–2005–21787; Directorate Identifier 2005–CE–34–AD'' in your request.

List of Subjects in 14 CFR Part 39

Air transportation, Aircraft, Aviation safety, Safety.

The Proposed Amendment

Accordingly, under the authority delegated to me by the Administrator, the Federal Aviation Administration proposes to amend 14 CFR part 39 as follows:

PART 39—AIRWORTHINESS DIRECTIVES

1. The authority citation for part 39 continues to read as follows:

Authority: 49 U.S.C. 106(g), 40113, 44701.

§ 39.13 [Amended]

2. The FAA amends § 39.13 by adding the following new airworthiness directive (AD):

Shadin: Docket No. FAA–2005–21787; Directorate Identifier 2005–CE–34–AD

When Is the Last Date I Can Submit Comments On This Proposed AD?

(a) We must receive comments on this proposed airworthiness directive (AD) by October 11, 2005.

What Other ADs Are Affected by This Action?

(b) None.

What Airplanes Are Affected by This AD?

(c) This AD affects Shadin ADC–2000 air data computers (ADC), part numbers (P/N) 962830A–1–S–8, 962830A–2–S–8, 962830A–3–S–8, configurations B, C, and D, that are installed in, but not limited to, the following aircraft (all serial numbers), and are certificated in any category:

Manufacturer	Model
Alliance Aircraft Group, LLC	H–250.
B–N Group Ltd	BN2A.
Bombardier Inc	DHC–3, DHC–6.
Cessna Aircraft Company	172, 180, 180E, 185, 206, 206E, 206F, 206G 208, 210L, 310.
deHavilland Inc	DHC–2.
The New Piper Aircraft, Inc	PA–28–180, PA–28–181, PA–31–350, PA–32–300, PA–32–301, PA–32R–300, PA–34–200T.

What Is the Unsafe Condition Presented in This AD?

(d) This AD is the result of reports that certain ADC–2000 units display incorrect altitude information on the Electronic Flight Information System (EFIS) to the pilot. The actions specified in this AD are to prevent ADC–2000 units, P/Ns 962830A–1–S–8, 962830A–2–S–8, and 962830A–3–S–8, configurations B, C, and D, from displaying incorrect altitude information. This could cause the flight crew to react to this incorrect flight information and possibly result in an unsafe operating condition.

What Must I do to Address This Problem?

(e) To address this problem, you must do the following, unless already done:

Actions	Compliance	Procedures
(1) To ensure the air data computer (ADC) and the Electronic Flight Information System (EFIS) altimetry accuracy, do the normal preflight check. If the altitudes, altimeter, and elevation differ by more than 75 foot, do not fly the airplane in IMC/IFR.	Within the next 25 hours time-in-service (TIS) after the effective date of this AD and thereafter before each flight until the ADC is upgraded as specified in paragraph (e)(2) of this AD.	Follow the Interim Procedures contained in Shadin Service Bulletin SB28–05–002, Rev C, dated June 29, 2005. The owner/operator holding at least a private pilot certificate as authorized by section 43.7 of the Federal Aviation Regulations (14 CFR 43.7) may do the check specified in paragraph (e)(1) of this AD. Make an entry into the aircraft records showing compliance with this portion of the AD following section 43.9 of the Federal Aviation Regulations (14 CFR 43.9).
(2) Return all Shadin ADC–2000s, part numbers 962830A–1–S–8, 962830A–2–S–8, 962830A–3–S–8, Configurations B, C, and D, to the Shadin Repair Facility for upgrade. Contact the Shadin Technical Support department for a Return Merchandise Authorization (RMA) number. Until the ADC–2000 is modified, returned, and reinstalled, only fly the airplane if equipment requirements for that airplane are still met.	Within the next 15 months after the effective of this AD.	Follow Shadin Service Bulletin SB28–05–002, Rev C, dated June 29, 2005.
(3) Do not install any Shadin ADC–2000, part number 962830A–1–S–8, 962830A–2–S–8, or 962830A–3–S–8, Configurations B, C, and D, unless it has been upgraded as specified in paragraph (e)(2) of this AD.	As of the effective date of this AD	Not applicable.

May I Request an Alternative Method of Compliance?

(f) You may request a different method of compliance or a different compliance time for this AD by following the procedures in 14 CFR 39.19. Unless FAA authorizes otherwise, send your request to your principal inspector. The principal inspector may add comments and will send your request to the Manager, Chicago Aircraft Certification Office (ACO), FAA. For information on any already approved alternative methods of compliance, contact Jeffrey Kuen, Aerospace Engineer, Chicago ACO, FAA, 2300 East Devon Avenue, Room 107, Des Plaines, Illinois 60018; telephone: (847) 294–7125; facsimile: (847) 294–7834; e-mail address: *jeffrey.kuen@faa.gov.*

May I Get Copies of the Documents Referenced in this AD?

(g) To get copies of the documents referenced in this AD, contact Shadin, 6831 Oxford Street, St. Louis Park, Minnesota 55426–4412; telephone: (800) 388–2849 or (952) 927–6500; facsimile: (952) 924–1111; email: *www.shadin.com.* To view the AD docket, go to the Docket Management Facility; U.S. Department of Transportation, 400 Seventh Street, SW., Nassif Building, Room PL–401, Washington, DC, or on the Internet at *http://dms.dot.gov.* The docket number is Docket No. FAA–2005–21787; Directorate Identifier 2005–CE–34–AD.

Issued in Kansas City, Missouri, on August 10, 2005.

Kim Smith,

Acting Manager, Small Airplane Directorate, Aircraft Certification Service.

[FR Doc. 05–16267 Filed 8–16–05; 8:45 am]

BILLING CODE 4910–13–P

DEPARTMENT OF TRANSPORTATION

Federal Aviation Administration

14 CFR Part 39

[Docket No. FAA–2005–22120; Directorate Identifier 2004–NM–92–AD]

RIN 2120–AA64

Airworthiness Directives; Airbus Model A319–100 Series Airplanes, Model A320–111 Airplanes, Model A320–200 Series Airplanes, and Model A321–100 Series Airplanes

AGENCY: Federal Aviation Administration (FAA), Department of Transportation (DOT).

ACTION: Notice of proposed rulemaking (NPRM).

SUMMARY: The FAA proposes to adopt a new airworthiness directive (AD) for Airbus Model A319–100 series airplanes, Model A320–111 airplanes, Model A320–200 series airplanes, and Model A321–100 series airplanes equipped with any additional center tank (ACT). This proposed AD would require identifying the part number of the ACT and, for certain ACTs, replacing the outer ACT manhole cover and seal. This proposed AD is prompted by reports of an ACT fuel transfer failure due to air leakage around the seal of the outer manhole covers of the ACTs. We are proposing this AD to prevent this leakage, which could result in fuel or fuel vapor leaking into the cargo compartment, and consequent increased risk of a fire in the cargo compartment.

DATES: We must receive comments on this proposed AD by September 16, 2005.

ADDRESSES: Use one of the following addresses to submit comments on this proposed AD.

- *DOT Docket Web Site:* Go to *http://dms.dot.gov* and follow the instructions for sending your comments electronically.
- *Government-wide Rulemaking Web Site:* Go to *http://www.regulations.gov* and follow the instructions for sending your comments electronically.
- *Mail:* Docket Management Facility, U.S. Department of Transportation, 400 Seventh Street SW., Nassif Building, room PL–401, Washington, DC 20590.
- *By Fax:* (202) 493–2251.
- *Hand Delivery:* Room PL–401 on the plaza level of the Nassif Building, 400 Seventh Street SW., Washington, DC, between 9 a.m. and 5 p.m., Monday through Friday, except Federal holidays.

For service information identified in this proposed AD, contact Airbus, 1 Rond Point Maurice Bellonte, 31707 Blagnac Cedex, France.

You can examine the contents of this AD docket on the Internet at *http://dms.dot.gov*, or in person at the Docket Management Facility, U.S. Department of Transportation, 400 Seventh Street SW., room PL–401, on the plaza level of the Nassif Building, Washington, DC. This docket number is FAA–2005–22120; the directorate identifier for this docket is 2004–NM–92-AD.

FOR FURTHER INFORMATION CONTACT: Tim Dulin, Aerospace Engineer, International Branch, ANM–116, FAA, Transport Airplane Directorate, 1601 Lind Avenue, SW., Renton, Washington 98055–4056; telephone (425) 227–2141; fax (425) 227–1149.

SUPPLEMENTARY INFORMATION:

Comments Invited

We invite you to submit any relevant written data, views, or arguments regarding this proposed AD. Send your comments to an address listed under **ADDRESSES**. Include ''Docket No. FAA–2005–22120; Directorate Identifier 2004-NM–92-AD'' at the beginning of your comments. We specifically invite comments on the overall regulatory, economic, environmental, and energy aspects of the proposed AD. We will consider all comments submitted by the closing date and may amend the proposed AD in light of those comments.

We will post all comments we receive, without change, to *http://dms.dot.gov,* including any personal information you provide. We will also post a report summarizing each substantive verbal contact with FAA personnel concerning this proposed AD. Using the search function of our docket Web site, anyone can find and read the comments in any of our dockets, including the name of the individual who sent the comment (or signed the comment on behalf of an association, business, labor union, etc.). You can review the DOT's complete Privacy Act Statement in the **Federal Register** published on April 11, 2000 (65 FR 19477–78), or you can visit *http://dms.dot.gov.*

Examining the Docket

You can examine the AD docket on the Internet at *http://dms.dot.gov*, or in person at the Docket Management Facility office between 9 a.m. and 5 p.m., Monday through Friday, except Federal holidays. The Docket Management Facility office (telephone (800) 647–5227) is located on the plaza level of the Nassif Building at the DOT street address stated in the **ADDRESSES** section. Comments will be available in the AD docket shortly after the DMS receives them.

Discussion

The Direction Générale de l'Aviation Civile (DGAC), which is the airworthiness authority for France, notified us that an unsafe condition may exist on Airbus Model A319–100 series airplanes, Model A320–111 airplanes, Model A320–200 series airplanes, and Model A321–100 series airplanes equipped with certain additional center tanks (ACTs). The DGAC advises that it has received reports of an ACT fuel transfer failure due to extrusion of the outer ACT manhole cover seals, which allowed air leaks. Subsequent analysis revealed the need to change the installation process and modify the seal material to ensure a proper seal. Leakage around the ACT outer manhole cover seals could result in fuel or fuel vapor leaking into the cargo compartment, and consequent increased risk of a fire in the cargo compartment.

Relevant Service Information

Airbus has issued Service Bulletin A320–28–1105, Revision 01, dated March 18, 2003. The service bulletin describes procedures for airplanes having affected ACTs for replacing the outer ACT manhole cover with a reinforced manhole cover, and replacing the outer manhole cover seal with a new seal. The DGAC mandated Service Bulletin A320–28–1105 and issued French airworthiness directive F–2004–038, dated March 17, 2004, to ensure the continued airworthiness of these airplanes in France. Accomplishing the actions specified in the service information is intended to adequately address the unsafe condition.

Service Bulletin A320–28–1105 states that its accomplishment ''requires the prior or simultaneous accomplishment'' of Service Bulletin A320–28–1087. However, this proposed AD would not require the actions specified in Service Bulletin A320–28–1087 because those actions are required by AD 2004–23–04, amendment 39–13859 (69 FR 65523, November 15, 2004).

Airbus Service Bulletin A320–28–1105 notes that Airbus Service Bulletins A320–28–1098 and A320–28–1086 ''can be done'' at the same time as Service Bulletin A320–28–1105, yet identifies those service bulletins as ''concurrent requirements.'' This proposed AD would not require either Service Bulletin A320–28–1086 (because those actions are required by AD 2004–23–04) or A320–28–1098 (because we have determined that those actions are not necessary to address the unsafe condition identified in this proposed AD).

FAA's Determination and Requirements of the Proposed AD

These airplane models are manufactured in France and are type certificated for operation in the United States under the provisions of section 21.29 of the Federal Aviation Regulations (14 CFR 21.29) and the applicable bilateral airworthiness agreement. Pursuant to this bilateral airworthiness agreement, the DGAC has kept the FAA informed of the situation described above. We have examined the DGAC's findings, evaluated all pertinent information, and determined that we need to issue an AD for products of this type design that are certificated for operation in the United States.

Therefore, we are proposing this AD, which would require accomplishing the applicable actions specified in the service information described previously, except as discussed below.

Difference Between Proposed AD and French Airworthiness Directive

The French airworthiness directive limits its applicability to Airbus Model A319–100 series airplanes, Model A320–111 airplanes, Model A320–200 series airplanes, and Model A321–100 series airplanes equipped with ACTs having certain part numbers. However, this proposed AD would not limit the applicability to certain ACT part numbers, but would require operators to first identify the ACT part number and then modify only the affected ACTs. This action will ensure that the unsafe condition is addressed on the fleet.

Costs of Compliance

The following table provides the estimated costs for U.S. operators to comply with this proposed AD.

ESTIMATED COSTS

Action	Work hours	Average hourly labor rate	Parts	Cost per airplane	Number of U.S.-registered airplanes	Fleet cost
P/N identification	1	$65	$0	$65	28	$1,820

Authority for This Rulemaking

Title 49 of the United States Code specifies the FAA's authority to issue rules on aviation safety. Subtitle I, section 106, describes the authority of the FAA Administrator. Subtitle VII, Aviation Programs, describes in more detail the scope of the Agency's authority.

We are issuing this rulemaking under the authority described in subtitle VII, part A, subpart III, section 44701, ''General requirements.'' Under that section, Congress charges the FAA with promoting safe flight of civil aircraft in air commerce by prescribing regulations for practices, methods, and procedures the Administrator finds necessary for safety in air commerce. This regulation is within the scope of that authority because it addresses an unsafe condition that is likely to exist or develop on products identified in this rulemaking action.

Regulatory Findings

We have determined that this proposed AD would not have federalism implications under Executive Order 13132. This proposed AD would not have a substantial direct effect on the States, on the relationship between the national Government and the States, or on the distribution of power and responsibilities among the various levels of government.

For the reasons discussed above, I certify that the proposed regulation:

1. Is not a ''significant regulatory action'' under Executive Order 12866;

2. Is not a ''significant rule'' under the DOT Regulatory Policies and Procedures (44 FR 11034, February 26, 1979); and

3. Will not have a significant economic impact, positive or negative, on a substantial number of small entities under the criteria of the Regulatory Flexibility Act. We prepared a regulatory evaluation of the estimated costs to comply with this proposed AD. See the **ADDRESSES** section for a location to examine the regulatory evaluation.

List of Subjects in 14 CFR Part 39

Air transportation, Aircraft, Aviation safety, Safety.

The Proposed Amendment

Accordingly, under the authority delegated to me by the Administrator, the FAA proposes to amend 14 CFR part 39 as follows:

PART 39—AIRWORTHINESS DIRECTIVES

1. The authority citation for part 39 continues to read as follows:

Authority: 49 U.S.C. 106(g), 40113, 44701.

§ 39.13 [Amended]

2. The FAA amends § 39.13 by adding the following new airworthiness directive (AD):

Airbus: Docket No. FAA–2005–22120; Directorate Identifier 2004–NM–92–AD.

Comments Due Date

(a) The Federal Aviation Administration must receive comments on this AD action by September 16, 2005.

Affected ADs

(b) None.

Applicability: (c) This AD applies to Airbus Model A319–111, –112, –113, –114, –115, –131, –132, and –133 airplanes; Model A320–111, –211, –212, –214, –231, –232, and –233 airplanes; and Model A321–111, –112, and –131 airplanes; certificated in any category; which are equipped with any additional center tank (ACT).

Unsafe Condition

(d) This AD was prompted by reports of an ACT fuel transfer failure due to air leakage around the seal of the outer manhole covers of the ACTs. We are requiring this AD to prevent this leakage, which could result in fuel or fuel vapor leaking into the cargo compartment, and consequent increased risk of a fire in the cargo compartment.

Compliance: (e) You are responsible for having the actions required by this AD performed within the compliance times specified, unless the actions have already been done.

Part Number Identification

(f) Within 30 days (for Model A319–111, –112, –113, –114, –115, –131, –132, and –133 airplanes) or 12 months (for Model A320–111, –211, –212, –214, –231, –232, and –233 airplanes; and Model A321–111, –112, and –131 airplanes) after the effective date of this AD: Determine whether the part number (P/N) of each ACT installed on the airplane is included in Table 1 of this AD. If no ACT installed on the airplane has a P/N included in Table 1 of this AD, no further work is required by this paragraph.

TABLE 1.—AFFECTED ACT P/NS

D2827091100000
D2827091100200
D2827091100600
D2827091300000
D2827091300200
D2827091300400
D2827105100000
D2827105100200
D2827105100400
D2827105200000
D2827105200200
D2827105200400
D2827105300000
D2827105300200
D2827105300400
D2827105400000
D2827105400200
D2827105400400
D2827105400600
D2827105400800
D2827105500000

TABLE 1.—AFFECTED ACT P/NS—Continued

D2827105500200
D2827105500400
D2827105600000
D2827105600200
D2827105600400
D2827107500000
D2827107500200

Manhole Cover/Seal Replacement

(g) Within 30 days (for Model A319–111, –112, –113, –114, –115, –131, –132, and –133 airplanes) or 12 months (for Model A320–111, –211, –212, –214, –231, –232, and –233 airplanes; and Model A321–111, –112, and –131 airplanes) after the effective date of this AD: For each ACT P/N listed in Table 1 of this AD: Before further flight, replace the outer ACT manhole cover with a reinforced manhole cover and replace the outer manhole cover seal with a new seal, in accordance with the Accomplishment Instructions of Airbus Service Bulletin A320–28–1105, Revision 01, dated March 18, 2003. Replacements are also acceptable if done before the effective date of this AD in accordance with Airbus Service Bulletin A320–28–1105, dated October 22, 2002.

Parts Installation

(h) As of the effective date of this AD, no person may install an ACT having any P/N listed in Table 1 of this AD, unless the actions required by paragraph (g) of this AD have been done for that ACT.

Alternative Methods of Compliance (AMOCs)

(i) The Manager, International Branch, ANM–116, Transport Airplane Directorate, FAA, has the authority to approve AMOCs for this AD, if requested in accordance with the procedures found in 14 CFR 39.19.

Related Information

(j) French airworthiness directive F–2004–038, dated March 17, 2004, also addresses the subject of this AD.

Issued in Renton, Washington, on August 10, 2005.

Kalene C. Yanamura,

Acting Manager, Transport Airplane Directorate, Aircraft Certification Service.

[FR Doc. 05–16263 Filed 8–16–05; 8:45 am]

BILLING CODE 4910–13–P

DEPARTMENT OF TRANSPORTATION

Federal Aviation Administration

14 CFR Part 39

[Docket No. FAA–2004–18564; Directorate Identifier 2004–NM–16–AD]

RIN 2120–AA64

Airworthiness Directives; Empresa Brasileira de Aeronautica S.A. (EMBRAER) Model EMB–135BJ, –135ER, –135KE, –135KL, –135LR, –145, –145ER, –145MR, –145LR, –145XR, –145MP, and –145EP Airplanes

AGENCY: Federal Aviation Administration (FAA), Department of Transportation (DOT).

ACTION: Supplemental notice of proposed rulemaking (NPRM); reopening of comment period.

SUMMARY: The FAA is revising an earlier NPRM for an airworthiness directive (AD) that applies to certain EMBRAER airplane models as identified above. The original NPRM would have required modifying the total air temperature (TAT) sensor heating system. The original NPRM was prompted by a report indicating that the fully automated digital electronic control (FADEC) unit failed to compensate for ice accretion on the engine fan blades due to a false temperature signal from the TAT sensor to the FADEC. This action revises the original NPRM by requiring modification of additional electrical connections for the TAT sensor heating system. This action also would expand the applicability of the original NPRM because the additional electrical connections must be modified on airplanes that had the TAT sensor heating system modified previously (*e.g.*, in production). This action also adds replacing the FADEC assemblies with new or modified assemblies as an additional means of compliance. We are proposing this supplemental NPRM to prevent failure of the TAT sensor, which could result in insufficient thrust to take off or (if coupled with the loss of an engine during takeoff) to abort the takeoff in a safe manner, and consequent reduced controllability of the airplane.

DATES: We must receive comments on this supplemental NPRM by September 12, 2005.

ADDRESSES: Use one of the following addresses to submit comments on this supplemental NPRM.

- DOT Docket Web site: Go to *http://dms.dot.gov* and follow the instructions for sending your comments electronically.
- Government-wide rulemaking Web site: Go to *http://www.regulations.gov* and follow the instructions for sending your comments electronically.
- Mail: Docket Management Facility; U.S. Department of Transportation, 400 Seventh Street SW., Nassif Building, room PL–401, Washington, DC 20590.
- Fax: (202) 493–2251.
- Hand Delivery: Room PL–401 on the plaza level of the Nassif Building, 400 Seventh Street SW., Washington, DC, between 9 a.m. and 5 p.m., Monday through Friday, except Federal holidays.

For service information identified in this proposed AD, contact Empresa Brasileira de Aeronautica S.A. (EMBRAER), P.O. Box 343—CEP 12.225, Sao Jose dos Campos—SP, Brazil.

You can examine the contents of this AD docket on the Internet at *http://dms.dot.gov*, or in person at the Docket Management Facility, U.S. Department of Transportation, 400 Seventh Street SW., room PL–401, on the plaza level of the Nassif Building, Washington, DC. This docket number is FAA–2004–18564; the directorate identifier for this docket is 2004–NM–16–AD.

FOR FURTHER INFORMATION CONTACT: Todd Thompson, Aerospace Engineer, International Branch, ANM–116, FAA, Transport Airplane Directorate, 1601 Lind Avenue, SW., Renton, Washington 98055–4056; telephone (425) 227–1175; fax (425) 227–1149.

SUPPLEMENTARY INFORMATION:

Comments Invited

We invite you to submit any relevant written data, views, or arguments regarding this supplemental NPRM. Send your comments to an address listed under **ADDRESSES.** Include ''Docket No. 2000–FAA–18564; Directorate Identifier 2004–NM–16–AD'' at the beginning of your comments. We specifically invite comments on the overall regulatory, economic, environmental, and energy aspects of this supplemental NPRM. We will consider all comments received by the closing date and may amend this supplemental NPRM in light of those comments.

We will post all comments submitted, without change, to *http://dms.dot.gov*, including any personal information you provide. We will also post a report summarizing each substantive verbal contact with FAA personnel concerning this supplemental NPRM. Using the search function of our docket Web site, anyone can find and read the comments in any of our dockets, including the name of the individual who sent the comment (or signed the comment on behalf of an association, business, labor union, etc.). You can review the DOT's complete Privacy Act Statement in the **Federal Register** published on April 11, 2000 (65 FR 19477–78), or you can visit *http://dms.dot.gov.*

Examining the Docket

You can examine the AD docket on the Internet at *http://dms.dot.gov*, or in person at the Docket Management Facility office between 9 a.m. and 5 p.m., Monday through Friday, except Federal holidays. The Docket Management Facility office (telephone (800) 647–5227) is located on the plaza level in the Nassif Building at the DOT street address stated in **ADDRESSES.** Comments will be available in the AD docket shortly after the Docket Management System (DMS) receives them.

Discussion

We proposed to amend 14 CFR part 39 with a notice of proposed rulemaking (NPRM) for an airworthiness directive (AD) (the ''original NPRM''). The original NPRM applies to certain EMBRAER Model EMB–135 and –145 series airplanes. The original NPRM was published in the **Federal Register** on July 8, 2004 (69 FR 41209). The original NPRM proposed to require modifying the total air temperature (TAT) sensor heating system.

Relevant Service Information

EMBRAER has issued Service Bulletin 145–30–0028, Revision 09, dated March 1, 2004. The original NPRM refers to EMBRAER Service Bulletin 145–30–0028, Revision 08, dated August 20, 2003, as the appropriate source of service information for modifying the TAT sensor heating system. Part III of the Accomplishment Instructions of Revision 09 of the service bulletin adds new procedures for modifying certain electrical connections. These electrical connections must be modified on airplanes on which any previous revision of EMBRAER Service Bulletin 145–30–0028 was done. Accomplishing the actions specified in the service information is intended to adequately address the unsafe condition.

The Departmento de Aviacao Civil (DAC) mandated Revision 09 of the service bulletin and issued Brazilian airworthiness directive 2004–01–02R2, dated November 29, 2004, to ensure the continued airworthiness of these airplanes in Brazil. (The original NPRM referred to Brazilian airworthiness directive 2004–01–02, dated January 27, 2004, as the parallel Brazilian airworthiness directive.)

We have revised paragraph (f) of this supplemental NPRM to require modifying the TAT sensor heating system in accordance with Revision 09 of the service bulletin. In addition, we have revised paragraph (g) of this supplemental NPRM to state that actions accomplished in accordance with Revisions 04 through 08 of the service bulletin are acceptable for compliance with paragraph (f), provided that the additional actions specified in Part III of Revision 09 of the service bulletin are accomplished. We have also revised paragraph (c), Applicability, of this supplemental NPRM to state that this supplemental NPRM applies to airplanes identified in Revision 09 of the service bulletin.

Brazilian airworthiness directive 2004–01–02R2 also includes an additional means of compliance. Brazilian airworthiness directive 2004–01–02R2 states that incorporating full-authority digital engine control (FADEC) software version 7.6 (or subsequent versions) on both engines is an alternative to modifying the TAT sensor heating system. EMBRAER has issued the service bulletins listed in the table below, which describe procedures for replacing the existing FADEC assemblies with new or modified assemblies that have FADEC software version 7.6, including verifying the part number of the ITT trim plug and replacing it with an ITT trim plug of another part number if necessary. These service bulletins also refer to the Rolls-Royce service bulletins listed in the table below as additional sources of service information for replacing the FADEC assemblies.

SERVICE INFORMATION FOR REPLACING FADEC ASSEMBLIES

EMBRAER service Bulletin	Revision	Date	For EMBRAER model—	Which refers to Rolls-Royce service bulletin—
145–73–0021	Original	July 23, 2004	EMB–135ER, –135KE, –135KL, –135LR, –145, –145ER, –145MR, –145LR, –145XR, –145MP, and –145EP.	AE3007A–73–071
145–73–0022	01	July 15, 2004	EMB–135ER, –135KE, –135KL, –135LR, –145, –145ER, –145MR, –145LR, –145XR, –145MP, and –145EP.	AE3007A–73–067
145–73–0023	Original	June 28, 2004	EMB–135ER, –135KE, –135KL, –135LR, –145, –145ER, –145MR, –145LR, –145XR, –145MP, and –145EP.	AE3007A–73–070
145–73–0024	01	July 15, 2004	EMB–135ER, –135KE, –135KL, –135LR, –145, –145ER, –145MR, –145LR, –145XR, –145MP, and –145EP.	AE3007A–73–069
145–73–0025	Original	July 23, 2004	EMB–135ER, –135KE, –135KL, –135LR, –145, –145ER, –145MR, –145LR, –145XR, –145MP, and –145EP.	AE3007A–73–068
145–73–0026	Original	June 28, 2004	EMB–145XR	AE3007A–73–072
145LEG–73–0003	01	July 15, 2004	EMB–135BJ	AE3007A–73–070
145LEG–73–0004	02	October 6, 2004	EMB–135BJ	AE3007A–73–072

The EMBRAER service bulletins listed in the table above also specify that installing the new or modified FADEC assemblies that have FADEC software version 7.6 also necessitates installing new engine indication and crew alerting system (EICAS) and central maintenance computer (CMC) versions.

Comments

We have considered the following comments on the original NPRM.

Request for Credit for Actions Accomplished Previously

Two commenters request that we revise the original NPRM to give credit for actions that they have previously accomplished on their airplane fleets. One commenter asks for credit for modifying the TAT sensor heating system in accordance with EMBRAER Service Bulletin 145–30–0028, dated September 20, 1999; Change 01, dated March 23, 2000; Change 02, dated December 27, 2000; or Change 03, dated February 15, 2001. The commenter states that many of its airplanes have been modified in accordance with the original issue and Change 01 of the service bulletin. Thus, revising the original NPRM would alleviate the burden of the commenter requesting approval of an alternative method of compliance (AMOC) and of the FAA addressing these AMOC requests. The other commenter states that EMBRAER Service Bulletin 145–30–0028, Changes 02 and 03, should be listed as acceptable previous revisions. The second commenter states no justification for its request.

We do not concur. EMBRAER Service Bulletin 145–30–0028, Revision 04, dated March 13, 2001, states that additional work is necessary on airplanes modified in accordance with the original issue or Changes 01 through 03. Also, Brazilian airworthiness directive 2004–01–02R1 refers to only Revisions 04 and subsequent of the service bulletin for compliance. Similarly, paragraph (g) of this supplemental NPRM (and the original NPRM) gives credit for modifications done before the effective date of this AD in accordance with EMBRAER Service Bulletin 145–30–0028, Revision 04; Revision 05, dated May 24, 2001; Revision 06, dated September 26, 2001;

Revision 07, dated April 10, 2003; or Revision 08. Operators may request approval of an AMOC for actions done in accordance with other revisions of the service bulletin. An operator's request should include copies of the applicable service bulletins, and data substantiating that the actions that have been accomplished provide an acceptable level of safety. We have not changed this supplemental NPRM in this regard.

Request To Extend the Compliance Time

One commenter requests that we extend the compliance time of 90 days that is stated in paragraph (f) of the original NPRM. The commenter states that, due to the large number of airplanes needing to be modified, 90 days is not enough time. The commenter does not specify what it would like the compliance time to be.

We agree that it is appropriate to extend the compliance time. In developing an appropriate compliance time for this supplemental NPRM, we considered the manufacturer's recommendation, the DAC's recommendation, and the number of airplanes that would be subject to the proposed requirements. We balanced these factors against the degree of urgency associated with the subject unsafe condition. In light of all of these factors, we find that a 180-day compliance time represents an appropriate interval of time for affected airplanes to continue to operate without compromising safety. We find that extending the compliance time in this way will ensure that the majority of affected operators are able to comply with the requirements of this AD during regularly scheduled maintenance. We have coordinated with the DAC on this issue, and they agree with our decision to extend the compliance time.

Explanation of Change to Applicability

We have revised the applicability of the original NPRM to identify model designations as published in the most recent type certificate data sheet for the affected models.

FAA's Determination and Proposed Requirements of the Supplemental NPRM

Certain changes discussed above expand the scope of the original NPRM; therefore, we have determined that it is necessary to reopen the comment period to provide additional opportunity for public comment on this supplemental NPRM.

Costs of Compliance

The following table provides the estimated costs for U.S. operators to comply with this supplemental NPRM.

ESTIMATED COSTS

Action	Work hours	Average labor rate per hour	Parts	Cost per airplane	Number of U.S.-cost registered airplanes	Fleet cost
Modify the TAT sensor heating system.	8	$65	$443	$963	Up to 434	Up to $417,942.

For airplanes modified in accordance with Revisions 04 through 08 of the service bulletin, it would take about 1 work hour per airplane to do the additional modification specified in Part III of the Accomplishment Instructions of the service bulletin, at an average labor rate of $65 per work hour. Based on these figures, the estimated cost of doing this proposed action is $65 per airplane.

Authority for This Rulemaking

Title 49 of the United States Code specifies the FAA's authority to issue rules on aviation safety. Subtitle I, Section 106, describes the authority of the FAA Administrator. Subtitle VII, Aviation Programs, describes in more detail the scope of the Agency's authority.

We are issuing this rulemaking under the authority described in subtitle VII, part A, subpart III, section 44701, ''General requirements.'' Under that section, Congress charges the FAA with promoting safe flight of civil aircraft in air commerce by prescribing regulations for practices, methods, and procedures the Administrator finds necessary for safety in air commerce. This regulation is within the scope of that authority because it addresses an unsafe condition that is likely to exist or develop on products identified in this rulemaking action.

Regulatory Findings

We have determined that this proposed AD would not have federalism implications under Executive Order 13132. This proposed AD would not have a substantial direct effect on the States, on the relationship between the national Government and the States, or on the distribution of power and responsibilities among the various levels of government.

For the reasons discussed above, I certify that the proposed regulation:

1. Is not a ''significant regulatory action'' under Executive Order 12866;

2. Is not a ''significant rule'' under the DOT Regulatory Policies and Procedures (44 FR 11034, February 26, 1979); and

3. Will not have a significant economic impact, positive or negative, on a substantial number of small entities under the criteria of the Regulatory Flexibility Act.

We prepared a regulatory evaluation of the estimated costs to comply with this supplemental NPRM. See the **ADDRESSES** section for a location to examine the regulatory evaluation.

List of Subjects in 14 CFR Part 39

Air transportation, Aircraft, Aviation safety, Safety.

The Proposed Amendment

Accordingly, under the authority delegated to me by the Administrator, the FAA proposes to amend 14 CFR part 39 as follows:

PART 39—AIRWORTHINESS DIRECTIVES

1. The authority citation for part 39 continues to read as follows:

Authority: 49 U.S.C. 106(g), 40113, 44701.

§ 39.13 [Amended]

2. The FAA amends § 39.13 by adding the following new airworthiness directive (AD):

Empresa Brasileira de Aeronautica S.A. (EMBRAER): Docket No. FAA–2004–18564; Directorate Identifier 2004–NM–16–AD.

Comments Due Date

(a) The Federal Aviation Administration must receive comments on this AD action by September 12, 2005.

Affected ADs

(b) None.

Applicability

(c) This AD applies to EMBRAER Model EMB–135BJ, –135ER, –135KE, –135KL, –135LR, –145, –145ER, –145MR, –145LR, –145XR, –145MP, and –145EP airplanes; as identified in EMBRAER Service Bulletin

145–30–0028, Revision 09, dated March 1, 2004; certificated in any category.

Unsafe Condition

(d) This AD was prompted by a report indicating that the fully automated digital electronic control (FADEC) unit failed to compensate for ice accretion on the engine fan blades, which was caused by a false temperature signal from the total air temperature (TAT) sensor to the FADEC. We are issuing this AD to prevent failure of the TAT sensor, which could result in insufficient thrust either to take off or (if coupled with the loss of an engine during takeoff) the inability to abort the takeoff in a safe manner, and consequent reduced controllability of the airplane.

Compliance

(e) You are responsible for having the actions required by this AD performed within the compliance times specified, unless the actions have already been done.

Modification

(f) Within 180 days after the effective date of this AD: Modify the TAT sensor heating system in accordance with the Accomplishment Instructions of EMBRAER Service Bulletin 145–30–0028, Revision 09, dated March 1, 2004.

Modifications Done According to Previous Revisions of the Service Bulletin

(g) Modifications done before the effective date of this AD in accordance with the revisions of the service bulletin in Table 1 of this AD are acceptable for compliance with the corresponding action in this AD, provided that the additional actions specified in PART III of the Accomplishment Instructions of EMBRAER Service Bulletin 145–30–0028, Revision 09, dated March 1, 2004, are accomplished within the compliance time required by paragraph (f) of this AD.

TABLE 1.—PREVIOUS REVISIONS OF THE SERVICE BULLETIN

EMBRAER service bulletin	Revision	Date
145–30–0028	04	March 13, 2001.
145–30–0028	05	May 24, 2001.
145–30–0028	06	September 26, 2001.
145–30–0028	07	April 10, 2003.
145–30–0028	08	August 20, 2003.

Credit for Replacement of FADEC Assemblies

(h) Replacing the existing FADEC assemblies with new or modified FADEC assemblies that include software version 7.6, in accordance with the Accomplishment Instructions of the applicable service bulletin listed in Table 2 of this AD, is acceptable for compliance with paragraph (f) of this AD. If the FADEC assemblies are replaced with new or modified assemblies as specified in this paragraph, all applicable engine indication and crew alerting system (EICAS) and central maintenance computer (CMC) upgrades, as well as any other applicable actions associated with upgrading the EICAS and CMC, must also be done, as specified in paragraph 1.C., ''Description—Time for Accomplishment'' of the applicable EMBRAER service bulletin.

TABLE 2.—SERVICE BULLETINS FOR UPGRADING FADEC ASSEMBLIES

For EMBRAER model—	EMBRAER service bulletin	Revision	Date
EMB–135ER, –135KE, –135KL, –135LR, –145, –145ER, –145MR, –145LR, –145XR, –145MP, and –145EP.	145–73–0021	Original	July 23, 2004.
EMB–135ER, –135KE, –135KL, –135LR, –145, –145ER, –145MR, –145LR, -145XR, –145MP, and –145EP.	145–73–0022	01	July 15, 2004.
EMB–135ER, –135KE, –135KL, –135LR, –145, –145ER, –145MR, –145LR, –145XR, –145MP, and –145EP.	145–73–0023	Original	June 28, 2004.
EMB–135ER, –135KE, –135KL, –135LR, –145, –145ER, –145MR, –145LR, –145XR, –145MP, and –145EP.	145–73–0024	01	July 15, 2004.
EMB–135ER, –135KE, –135KL, –135LR, –145, –145ER, –145MR, –145LR, –145XR, –145MP, and –145EP.	145–73–0025	Original	July 23, 2004.
EMB–145XR	145–73–0026	Original	June 28, 2004.
EMB–135BJ	145LEG–73–0003.	01	July 15, 2004.
EMB–135BJ	145LEG–73–0004.	02	October 6, 2004.

Alternative Methods of Compliance (AMOCs)

(i) The Manager, International Branch, ANM–116, Transport Airplane Directorate, FAA, has the authority to approve AMOCs for this AD, if requested in accordance with the procedures found in 14 CFR 39.19.

Related Information

(j) Brazilian airworthiness directive 2004–01–02R2, dated November 29, 2004, also addresses the subject of this AD.

Issued in Renton, Washington, on August 9, 2005.

Ali Bahrami,

Manager, Transport Airplane Directorate, Aircraft Certification Service.

[FR Doc. 05–16262 Filed 8–16–05; 8:45 am]

BILLING CODE 4910–13–P

SOCIAL SECURITY ADMINISTRATION

20 CFR Part 404

[Regulation No. 4]

RIN 0960–AF34

Revised Medical Criteria for Evaluating Visual Disorders

AGENCY: Social Security Administration.

ACTION: Proposed rules.

SUMMARY: We propose to revise the criteria in the Listing of Impairments (the listings) that we use to evaluate

claims involving visual disorders. We apply these criteria when you claim benefits based on disability under title II and title XVI of the Social Security Act (the Act). The proposed revisions reflect our program experience and advances in medical knowledge, treatment, and methods of evaluating visual disorders.

DATES: To be sure your comments are considered, we must receive them by October 17, 2005.

ADDRESSES: You may give us your comments by: using our Internet site facility (*i.e.*, Social Security Online) at *http://policy.ssa.gov/pnpublic.nsf/LawsRegs* or the Federal eRulemaking Portal at *http://www.regulations.gov*; e-mail to *regulations@ssa.gov*; telefax to (410) 966–2830; or by letter to the Commissioner of Social Security, P.O. Box 17703, Baltimore, Maryland 21235–7703. You may also deliver them to the Office of Regulations, Social Security Administration, 100 Altmeyer Building, 6401 Security Boulevard, Baltimore, Maryland 21235–6401, between 8 a.m. and 4:30 p.m. on regular business days. Comments are posted on our Internet site at *http://policy.ssa.gov/pnpublic.nsf/LawsRegs* or you may inspect them on regular business days by making arrangements with the contact person shown in this preamble.

Electronic Version: The electronic file of this document is available on the date of publication in the **Federal Register** at *http://www.gpoaccess.gov/fr/index.html*. It is also available on the Internet site for SSA (*i.e.*, Social Security Online) at *http://policy.ssa.gov/pnpublic.nsf/LawsRegs.*

FOR FURTHER INFORMATION CONTACT: Robert Augustine, Social Insurance Specialist, Office of Disability and Income Security Programs, Social Security Administration, 100 Altmeyer, 6401 Security Boulevard, Baltimore, Maryland 21235–6401, (410) 965–0020 or TTY (410) 966–5609. For information on eligibility or filing for benefits, call our national toll-free number, 1–800–772–1213 or TTY 1–800–325–0778, or visit our Internet Web site, Social Security Online, at *http://www.socialsecurity.gov.*

SUPPLEMENTARY INFORMATION:

What Programs Would These Proposed Regulations Affect?

These proposed regulations would affect disability and blindness determinations and decisions that we make under title II and title XVI of the Act. In addition, to the extent that Medicare entitlement and Medicaid eligibility are based on whether you qualify for disability or blindness benefits under title II or title XVI, these proposed regulations also would affect the Medicare and Medicaid programs.

Who Can Get Disability or Blindness Benefits?

Under title II of the Act, we provide for the payment of disability benefits, including disability benefits based on blindness, if you are disabled and belong to one of the following three groups:

- Workers insured under the Act;
- Children of insured workers; and
- Widows, widowers, and surviving divorced spouses (see 20 CFR 404.336) of insured workers.

Under title XVI of the Act, we provide for Supplemental Security Income (SSI) payments on the basis of disability or blindness if you are disabled or blind and have limited income and resources.

How Do We Define Blindness?

For both the title II and title XVI programs, the Act defines blindness as ''central visual acuity of 20/200 or less in the better eye with the use of a correcting lens. An eye which is accompanied by a limitation in the fields of vision such that the widest diameter of the visual field subtends an angle no greater than 20 degrees shall be considered * * * as having a central visual acuity of 20/200 or less.'' (Sections 216(i)(1) and 1614(a)(2) of the Act.)

If you are seeking benefits under title II, your blindness generally must meet the 12-month statutory duration requirement. However, if you are seeking payments under title XVI of the Act, your blindness need not meet the 12-month statutory duration requirement. Also, if you are seeking payments under title XVI of the Act, there is no requirement that you be unable to do any substantial gainful activity (SGA). However, if you are working, we will consider your earnings to determine if you are eligible for SSI payments.

How Do We Define Disability?

Under both the title II and title XVI programs, disability must be the result of any medically determinable physical or mental impairment or combination of impairments that is expected to result in death or which has lasted or is expected to last for a continuous period of at least 12 months. Our definitions of disability are shown in the following table:

If you file a claim under * * *	And you are * * *	Disability means you have a medically determinable impairment(s) as described above and that results in * * *
title II	an adult or a child	the inability to do any SGA.
title XVI	a person age 18 or older	the inability to do any SGA.
title XVI	a person under age 18	marked and severe functional limitations.

There is also an additional definition of disability if you are seeking benefits under title II of the Act, have attained age 55, and have blindness as defined in section 216(i)(1) of the Act: Disability means that the blindness has resulted in the inability to engage in SGA requiring skills or abilities comparable to those of any gainful activity in which you previously engaged with some regularity and over a substantial period of time.

What are the Listings?

The listings are examples of impairments that we consider severe enough to prevent an individual from doing any gainful activity without considering vocational factors, or that result in ''marked and severe functional limitations'' in children seeking SSI payments based on disability under title XVI of the Act. Although we publish the listings only in appendix 1 to subpart P of part 404 of our rules, we incorporate them by reference in the SSI program in § 416.925 of our regulations, and apply them to claims under both title II and title XVI of the Act.

How Do We Use the Listings?

We generally use the medical criteria in the listings only to make determinations or decisions of disability. The listings are in two parts. There are listings for adults (part A) and for children (part B). If you are a person age 18 or over, we apply the listings in part A when we assess your claim, and we never use the listings in part B.

If you are an individual under age 18, we first use the criteria in part B of the listings. If the listings in part B do not apply, and the specific disease process(es) has a similar effect on adults and children, we then use the criteria in part A. (See §§ 404.1525 and 416.925.)

If your impairment(s) does not meet the criteria in any listing, we will also

consider whether it medically equals any listing; that is, whether it is as medically severe as the criteria in the listed impairment. (See §§ 404.1526 and 416.926.)

We will never deny your claim or decide that you no longer qualify for benefits because your impairment(s) does not meet or medically equal a listing. If you have a severe impairment(s) that does not meet or medically equal any listing, we may still find you disabled based on other rules in the ''sequential evaluation process'' that we use to evaluate all disability claims. (See §§ 404.1520, 416.920, and 416.924.)

Also, when we conduct reviews to determine whether your disability continues, we will not find that your disability has ended based only on any changes in the listings. Our regulations explain that, when we change our listings, we continue to use our prior listings when we review your case, if you qualified for disability benefits or SSI payments based on our determination or decision that your impairment(s) met or medically equaled the listings. In these cases, we determine whether you have experienced medical improvement, and if so, whether the medical improvement is related to the ability to work. If your condition(s) has medically improved so that you no longer meet or medically equal the prior listing, we evaluate your case further to determine whether you are currently disabled. We may find that you are currently disabled, depending on the full circumstances of your case. (See §§ 404.1594(c)(3)(i) and 416.994(b)(2)(iv)(A)). If you are a child who is eligible for SSI payments, we follow a similar rule after we decide that you have experienced medical improvement in your condition(s). See § 416.994a(b)(2).

Why Are We Proposing To Revise the Listings for Visual Disorders?

We are proposing these revisions to update the medical criteria in the listings for visual disorders and to provide more information about how we evaluate visual disorders. We are not proposing any changes here to the listings for disturbances of labyrinthine-vestibular function (listing 2.07), hearing impairments (listings 2.08 and 102.08), and loss of speech (listing 2.09). However, we intend to publish separately proposed rules that would update the criteria for those disorders.

On April 24, 2002, we published final rules in the **Federal Register** (67 FR 20018) that included technical revisions to the listings for special senses and speech disorders. Prior to this, we published final rules that included revisions to the special senses and speech listings in the **Federal Register** on December 6, 1985 (50 FR 50068). We last published final rules making comprehensive revisions to the part A special senses and speech listings in the **Federal Register** on March 27, 1979 (44 FR 18170), and final rules making comprehensive revisions to the part B special senses and speech listings on March 16, 1977 (42 FR 14705). The current special senses and speech listings will no longer be effective on July 2, 2005, unless we extend them, or revise and issue them again.

When Will We Start To Use These Proposed Rules?

We will not use these proposed rules until we evaluate the public comments we receive on them, determine whether to issue them as final rules, and issue final rules in the **Federal Register**. If we publish final rules, we will explain in the preamble how we will apply them, and we will summarize and respond to the major public comments. Until the effective date of any final rules, we will continue to use our current rules.

How Long Would These Proposed Rules Be Effective?

If we publish these proposed rules as final rules, they will remain in effect for 8 years after the date they become effective, unless we extend them, or revise and issue them again.

How Are We Proposing To Change the Introductory Text to the Special Senses and Speech Listings for Adults?

2.00 Special Senses and Speech

We propose to remove the following sections of current 2.00:

- The last paragraph of 2.00A3, ''Field of vision.''
- Paragraph 2.00A4, ''Muscle function.''
- The first paragraph of 2.00A6, ''Special situations.''

The last paragraph of current 2.00A3, ''Field of vision,'' explains that when the visual field loss is predominantly in the lower visual fields, a system such as the weighted grid scale for perimetric fields as described by B. Esterman in 1968 may be used for determining whether the visual field loss is comparable to that described in table 2 in section 2.00 of the listings. As this kind of scale is rarely used, we believe that we no longer need this guidance in the introductory text.

Current 2.00A4, ''Muscle function,'' describes the type of impairment evaluated under current listing 2.06, ''Total bilateral ophthalmoplegia.'' (Ophthalmoplegia is paralysis of the eye muscles.) As the causes of this disorder are now more readily detectable and treatable, this disorder has become extremely rare. Therefore, we propose to remove both the current listing and the guidance in the introductory text that addresses this disorder. Instead, we would evaluate total bilateral ophthalmoplegia and other eye muscle disorders by assessing the impact of such disorders on your visual efficiency under proposed listing 2.04, or based on your actual visual functioning.

The first paragraph of current 2.00A6, ''Special situations,'' explains how we calculate visual acuity efficiency for individuals with aphakia (the absence of the anatomical lens of the eye). Advances in technology have led to the development of effective synthetic intraocular lenses. Also, contact lenses have been technically refined and may be used in those instances in which the anatomical lens is not replaced with a synthetic lens. Because the synthetic intraocular lens or the contact lens corrects both the visual acuity and the visual field, we would compute the visual acuity efficiency or visual field efficiency as though the eye had an anatomical lens. Therefore, we no longer need this guidance.

We propose to reorganize and expand the rest of the current introductory text for visual disorders to provide additional guidance. The following is a detailed explanation of the proposed introductory text.

Proposed 2.00A—How Do We Evaluate Visual Disorders?

This section corresponds to current 2.00A, ''Disorders of Vision.'' We propose to clarify the information in the current section by reorganizing the material into eight subsections and by providing additional guidance as explained below.

Proposed 2.00A1—What Are Visual Disorders?

This proposed section corresponds to current 2.00A1, ''Causes of impairment.'' We propose to make nonsubstantive editorial changes for clarity.

Proposed 2.00A2—What Is Statutory Blindness?

This proposed section would revise current 2.00A7, ''Statutory blindness,'' to include the statutory definition. We also propose to update the references to the listings that show statutory blindness to reflect the revised listing criteria.

Proposed 2.00A3—What Evidence Do We Need To Establish Statutory Blindness Under Title XVI?

In this new section, we propose to explain that when we make a determination or decision that you have statutory blindness under title XVI, we require evidence showing only that the statutory criteria are satisfied; we do not need evidence to document the visual disorder that causes the blindness. We also propose to explain that there is no duration requirement for statutory blindness under title XVI.

We propose to add this section because blindness is treated differently under title II and title XVI of the Act. Under title II, blindness is generally evaluated in the same way as other medical impairments. Under title XVI, blindness and disability are separate categories, and the requirements for eligibility based on blindness are different from the requirements for eligibility based on disability.

Proposed 2.00A4—What Evidence Do We Need to Evaluate Visual Disorders, Including Those That Result in Statutory Blindness Under Title II?

We propose to revise the last sentence of current 2.00A1 to explain what evidence we need to evaluate a visual disorder.

Proposed 2.00A5—How Do We Measure Best-Corrected Visual Acuity?

We propose to revise the guidance in the second sentence of current 2.00A2, ''Visual acuity,'' by providing that, in addition to testing that uses Snellen methodology, we may also use visual acuity measurements obtained using another testing methodology that is comparable to Snellen methodology. We also propose to clarify what constitutes best-corrected visual acuity and to add guidance indicating that we will not use the results of visual evoked response testing or pinhole testing to determine best-corrected visual acuity.

Visual evoked response testing evaluates the function of the visual pathways from the retina, along the optic nerve and optic tract, to the vision cortex in the occipital lobe of the brain. While this testing can provide an estimate of visual acuity, it is not a direct measure of visual acuity.

Pinhole testing is used to determine whether your visual acuity can be improved with a corrective lens. However, you may not have the same degree of correction with corrective lenses that you have with pinholes. Additionally, even though pinhole testing fails to show an improvement in your acuity, your acuity may improve with corrective lenses. Because pinhole testing may underestimate or overestimate your visual acuity, we will not use it to determine your best-corrected visual acuity.

Proposed 2.00A6—How Do We Measure Visual Fields?

This section would replace current 2.00A3, ''Field of vision.'' Current 2.00A3 indicates that we will use ''usual perimetric methods'' or other ''comparable perimetric devices'' to measure the size of the visual field. The Goldmann perimeter is specifically cited as a comparable perimetric device.

In its 2002 report, *Visual Impairments: Determining Eligibility for Social Security Benefits,* the National Research Council's (NRC's) Committee on Disability Determination for Individuals with Visual Impairments stated, as part of its recommendations for improvements to assessing visual field loss, ''the current SSA standard should be revised so that disability determinations are based on the results of automated static projection perimetry rather than Goldmann (kinetic, nonautomated) visual fields.'' (See the full citation at the end of this preamble.) These proposed rules would partially adopt this recommendation and provide that we will use visual field measurements obtained with an automated static threshold perimetry test performed on a perimeter that meets our requirements. However, we will also continue to use comparable visual field measurements obtained with Goldmann or other kinetic perimetry.

In proposed 2.00A6a(i), we explain when we need visual field testing.

In proposed 2.00A6a(ii), we explain that when we need to measure the extent of your visual field loss, we will use visual field measurements obtained with an automated static threshold perimetry test performed on a perimeter that meets our requirements. We adopted as our requirements the criteria recommended in the NRC report referred to above. We propose to cite the Humphrey Field Analyzer as an example of an acceptable perimeter because the NRC report cited it, and the Humphrey Field Analyzer is the most widely used automated perimeter in the United States that is used to perform this type of test.

The NRC report also cited the Octopus perimeter as another example of an automated perimeter that meets the criteria set out in its recommendations. We have not included the Octopus perimeter as an example of an acceptable perimeter in proposed 2.00A6a(ii), because it is not our intention to list in these rules every acceptable automated perimeter and the Octopus perimeter is not widely used in the United States.

In proposed 2.00A6a(iii), we describe the requirements of an acceptable automated static threshold perimetry test.

In proposed 2.00A6a(iv), we explain that to determine statutory blindness, we need a test that measures the central 24 to 30 degrees of the visual field. We also provide examples of acceptable tests.

In proposed 2.00A6a(v), we explain that to determine if the criterion in 2.03B is met, we need a test, performed on a Humphrey field analyzer, that measures the central 30 degrees of the visual field. We explain that we can use comparable results from other acceptable perimeters, and we provide an example of a comparable result. We also explain that we cannot use tests that do not measure the central 30 degrees of the visual field, such as the Humphrey 24–2 test, to determine if your impairment meets or medically equals listing 2.03B. This criterion, which we are proposing in listing 2.03B, adopts the NRC's recommendation in its 2002 report that we require a test measuring the central 30 degrees of the visual field.

In proposed 2.00A6a(vi), we explain that we measure the extent of visual field loss by determining the portion of the visual field in which you can see a white III4e stimulus. This stimulus specification is the same as the specification in the second paragraph of current 2.00A3.

In proposed 2.00A6a(vii), we explain that we need to determine the decibel (dB) level that corresponds to a 4e intensity for the particular perimeter being used. We further explain that we will then use the dB printout to determine which points would be seen at the 4e intensity level. We also give an example which explains that, for tests performed on Humphrey perimeters, any point seen at 10 dB or higher is a point that would be seen with a 4e stimulus.

In proposed 2.00A6a(viii), we explain that we can also use visual field measurements obtained using kinetic perimetry, such as the Humphrey ''SSA Test Kinetic'' or Goldmann perimetry. We contracted with West Virginia University to conduct research to determine whether the Humphrey ''SSA Test Kinetic'' is comparable to Goldmann perimetry. This research, which was completed in April 2000, showed that the Humphrey ''SSA Test Kinetic'' is comparable to Goldmann perimetry, except that the Humphrey ''SSA Test Kinetic'' does not identify

scotomata, that is, non-seeing areas in the visual field surrounded by seeing areas. Therefore, we propose to provide that if we need additional information because your visual disorder has progressed to the point where it is likely to result in a significant limitation in the central visual field, such as a scotoma, we will supplement the automated kinetic perimetry with the results of a Humphrey 30–2 or comparable test.

In proposed 2.00A6a(ix), we explain that we will not use the results of visual field screening tests, such as confrontation tests, tangent screen tests, or automated static screening tests, to determine that your impairment meets or medically equals a listing or to evaluate your residual functional capacity. We also explain that we can use normal results from visual field screening tests to determine whether the impact of your visual disorder on your visual field is severe when these results are consistent with the other evidence in your case record. We would also list some circumstances under which we will not consider normal test results to be consistent with the other evidence in the file.

Consistent with our proposed removal of the guidance on aphakia, we propose to remove the stimulus specifications used to test individuals with aphakia contained in the first two paragraphs of current 2.00A3.

In proposed 2.00A6b, we would revise the guidance in the first paragraph of current 2.00A3 on the use of corrective lenses during visual field testing. We propose to explain that eyeglasses must not be worn during the visual field examination because they limit your field of vision, but contact lenses or perimetric lenses may be used in order to obtain the most accurate visual field measurements. We also provide that, for this single purpose, you do not need to demonstrate that you have the ability to use the contact or perimetric lenses on a sustained basis.

Proposed 2.00A7—How Do We Calculate Visual Efficiency?

In this proposed section, we would expand the guidance in current 2.00A5, ''Visual efficiency,'' by explaining how we calculate visual acuity efficiency, visual field efficiency, and visual efficiency. The provisions in proposed 2.00A7b are based on the first sentence of paragraph 2 of the explanatory text following Table 2 in the current rules. As we explain below, we are proposing to delete that sentence because we are moving it here. The provisions in proposed 2.00A7c are based on the current language of 2.00A5 as well as the parenthetical statement at the end of current listing 2.04, which we are proposing to delete because it is redundant.

Proposed 2.00A8—How Do We Evaluate Specific Visual Problems?

This section would replace current 2.00A6, ''Special situations.'' In this section, we propose to add guidance for evaluating specific visual problems. The following is a discussion of the proposed section.

Proposed 2.00A8a—Statutory Blindness

In this proposed section, we would codify in our regulations a longstanding procedure. The most commonly used visual acuity test charts are charts based on Snellen methodology. These charts usually do not measure visual acuity between 20/100 and 20/200. Therefore, if you are unable to read any of the letters on the 20/100 line on a test chart based on Snellen methodology, your visual acuity will be assessed as 20/200 or less.

There are newer test charts (not yet widely used, but comparable to charts based on Snellen methodology) that provide measurements of visual acuity between 20/100 and 20/200. Based on medical literature, we know that if your visual acuity is between 20/100 and 20/200 as measured on those newer test charts, it would be 20/200 if it were measured using the more common chart based on Snellen methodology. We explain in the proposed section that if your visual acuity is measured using one of these newer charts, and you cannot read any of the letters on the 20/100 line, we will determine that you have statutory blindness based on a visual acuity of 20/200 or less. We also provide that, regardless of the type of test chart used, you do not have statutory blindness if you can read at least one letter on the 20/100 line.

Proposed 2.00A8b—Blepharospasm

We propose to describe the disorder and explain that we must consider how the involuntary blinking that characterizes it can affect your ability to maintain the measured visual acuities and visual fields over time.

Proposed 2.00A8c—Scotoma

We propose to define the term scotoma as a non-seeing area in the visual field surrounded by a seeing area. We also explain that when we measure your visual field, we will subtract the length of any scotoma, other than the normal blind spot, from the overall length of any diameter on which it falls.

Proposed 2.00C—How Do We Evaluate Impairments That Do Not Meet One of the Special Senses and Speech Listings?

We propose to revise the guidance in the second paragraph of current 2.00A6 by stating our basic adjudicative principle that if the impairment(s) does not meet or medically equal the criteria of a listing in this body system, we must consider whether it meets or medically equals the criteria of a listing in another body system. If not, we must continue the sequential evaluation process (see §§ 404.1520 and 416.920) to determine whether you are disabled or continue to be disabled (see §§ 404.1594, 416.994 and 416.994a). This new section would apply to all the impairments in this body system, not just visual disorders.

How Are We Proposing To Change the Criteria in the Special Senses and Speech Listings for Adults?

2.01 Category of Impairments, Special Senses and Speech

We propose to remove the reservation for listing 2.05 because it is no longer needed. We also propose to remove current listing 2.06, ''Total bilateral ophthalmoplegia,'' for the reasons cited above in the explanation of the proposed removal of current 2.00A4, ''Muscle function.''

Proposed Listing 2.02—Loss of Visual Acuity

This proposed listing corresponds to current listing 2.02, ''Impairment of visual acuity.'' We propose to change the heading to be consistent with other language in these proposed rules.

Proposed Listing 2.03—Contraction of the Visual Field in the Better Eye

This proposed listing corresponds to current listing 2.03, ''Contraction of peripheral visual fields in the better eye.'' We propose to remove current listing 2.03A, which provides that an individual's visual field loss is of listing-level severity when the field is contracted to 10 degrees or less from the point of fixation. Current listing 2.03B provides that an individual's visual field loss is of listing-level severity if that loss results in the widest diameter of the field subtending an angle no greater than 20 degrees. Any visual field loss that satisfies the criterion in current listing 2.03A will also satisfy the criterion in current listing 2.03B. Therefore, current listing 2.03A is unnecessary. We also propose to redesignate current listing 2.03B as listing 2.03A, and to make nonsubstantive editorial changes.

In its 2002 report, the NRC suggested that a mean deviation (MD) of −22 or

worse on an automated static threshold perimetry test measuring the central 30 degrees of the visual field ''would serve as a reasonable criterion for disability determination.'' (See the full citation at the end of this preamble.) We agree with the NRC and would add this criterion as proposed listing 2.03B.

Proposed listing 2.03C corresponds to current listing 2.03C. We propose to clarify the criterion by indicating that a determination of visual field efficiency must be based on kinetic visual field testing.

Proposed Listing 2.04—Loss of Visual Efficiency

This proposed listing corresponds to current listing 2.04, ''Loss of visual efficiency.'' As already explained, we propose to remove the parenthetical statement at the end of the current listing because it is redundant. However, we propose to add a reference to that section of the proposed preface as a reminder of where this guidance is contained.

Proposed Table 1—Percentage of Visual Acuity Efficiency Corresponding to the Best-Corrected Visual Acuity Measurement for Distance in the Better Eye

To be consistent with our proposed removal of the introductory text on aphakia, we propose to remove the columns and guidance addressing aphakia from current Table 1. We also propose to remove the entries for visual acuities worse than 20/100 for the reasons we gave under the explanation of proposed 2.00A8a.

Proposed Table 2—Charts of Visual Fields

We propose to remove the first sentence of current paragraph 2 in the explanation of how to use Table 2, which provides instructions for calculating the percent of visual field efficiency, since this provision has been moved to proposed 2.00A7b. We also propose to make nonsubstantive editorial changes for clarity.

How Are We Proposing To Change the Introductory Text to the Special Senses Listings for Children?

102.00 Special Senses and Speech

Except for minor editorial changes, we have repeated much of the introductory text of proposed 2.00A in the introductory text to proposed 102.00A. This is because the same basic rules for establishing and evaluating the existence and severity of visual disorders in adults also apply to children. Because we have already described these provisions under the explanation of proposed 2.00A, the following discussions describe only those provisions that are unique to the childhood rules or that require further explanation specific to evaluating disability in children.

We propose to remove the second paragraph of current 102.00A, ''Visual impairments in children.'' This paragraph indicates that the accommodative reflex is generally not present in children under 6 months of age (or, for a premature child, until 6 months of age plus the number of months the child is premature). It also provides that the absence of this reflex should be considered indicative of a visual impairment only in children above this age. We include this guidance in the current rules to explain that it is not appropriate to use the criterion in current listing 102.02B1 until the child has reached the required age. However, in these proposed listings, current listing 102.02B1 would be incorporated into the more general category of abnormal anatomical findings evaluated under proposed listing 102.02B2. As the lack of the accommodative reflex would not be considered an abnormal anatomical finding in very young children, its absence would not satisfy the proposed listing criterion. Therefore, we no longer need this explanation.

Proposed 102.00A1—What Are Visual Disorders?

In this section, we would expand the guidance in proposed 2.00A1 to indicate that a loss of visual acuity may affect other age-appropriate activities. We added this example to reflect the way we evaluate disability claims of children who are filing for or are receiving SSI payments.

Proposed 102.00A2—What Is Statutory Blindness?

In this section, we repeat the guidance in proposed 2.00A2, but refer to the childhood listings that show statutory blindness.

Proposed 102.00A4—What Evidence Do We Need To Evaluate Visual Disorders, Including Those That Result in Statutory Blindness Under Title II?

In this section, we propose to include more detailed guidance than we now have in the third paragraph of current 102.00A. In proposed 102.00A4a, we repeat the guidance in proposed section 2.00A4a. Proposed 102.00A4b is also the same as proposed 2.00A4b, except that we include ''near drowning'' rather than ''stroke'' as an example of a catastrophic event that could result in cortical blindness in children. We have included a different example because stroke is not likely to occur in children. Proposed 102.00A4c is the same as proposed 2.00A4c.

Proposed 102.00A5—How Do We Measure Best-Corrected Visual Acuity?

In this section, we propose to revise the guidance in the first paragraph of current 102.00A. In proposed 102.00A5, we would repeat the guidance in proposed 2.00A5. We also discuss, in proposed 102.00A5a, comparable visual acuity testing for children who are unable to participate in testing using Snellen methodology, for example, because they are too young, and add guidance for how we propose to evaluate children who are unable to participate in testing using Snellen methodology or other comparable testing.

Proposed 102.00A6—How Do We Measure Visual Fields?

In this section, we propose to repeat the guidance in 2.00A6 with the following exceptions:

- We would not include macular edema as an example of a visual disorder that could result in visual field loss because this disorder is not likely to occur in children.
- We would revise the guidance in the first paragraph of proposed 2.00A6a(ix) to include an additional way we evaluate disability claims of children who are filing for or are receiving SSI payments.

Proposed 102.00C—How Do We Evaluate Impairments That Do Not Meet One of the Special Senses and Speech Listings?

In this section, we repeat the guidance in proposed 2.00C, but include the definition of disability for children who are filing for or are receiving SSI payments.

How Are We Proposing To Change the Criteria in the Special Senses and Speech Listings for Children?

102.01 Category of Impairments, Special Sense Organs

We propose to add new listings 102.03, ''Contraction of the visual field in the better eye,'' and 102.04, ''Loss of visual efficiency,'' because they apply to children as well as adults. Due to the addition of these listings, we also propose to add Table 1, ''Percentage of Visual Acuity Efficiency Corresponding to the Best-Corrected Visual Acuity Measurements for Distance in the Better Eye,'' and Table 2, ''Charts of Visual Fields.''

These proposed new listings and tables are identical to the corresponding

adult listings and tables. Currently, we use listings 2.03 and 2.04 (and their corresponding tables) to evaluate children with visual field and visual efficiency impairments. With proposed listings 102.03 and 102.04 we would no longer need to refer to the listings in part A when we evaluate these impairments in children.

Proposed Listing 102.02—Loss of Visual Acuity

This proposed listing corresponds to current listing 102.02, ''Impairments of visual acuity.'' We are not proposing any changes to current listing 102.02A.

We use current listing 102.02B to evaluate visual acuity impairments in children below 3 years of age at the time of adjudication. We propose to remove the age criterion and instead to provide that the listing will be used to evaluate a visual acuity disorder in any child who is unable to participate in testing using Snellen methodology or other comparable visual acuity testing, and who has specified abnormal anatomical findings.

The criteria in current listing 102.02B are all examples of abnormal anatomical findings observable during a clinical eye examination. When present in the better eye, these abnormal anatomical findings would be expected to result in the absence of fixation and visual following behavior, and would indicate a visual acuity of 20/200 or worse. Rather than list each type of abnormal anatomical finding, we propose to combine the current criteria into a general category of abnormal physical findings in proposed listing 102.02B1. Proposed listings 102.02B2 and 102.02B3 would add criteria for impairments that generally are not observable during a clinical eye examination, but are diagnosed based on abnormal neuroimaging or an abnormal electroretinogram.

Clarity of These Proposed Rules

Executive Order 12866, as amended by Executive Order 13258, requires each agency to write all rules in plain language. In addition to your substantive comments on these proposed rules, we invite your comments on how to make these proposed rules easier to understand. For example:

- Have we organized the material to suit your needs?
- Are the requirements in the rules clearly stated?
- Do the rules contain technical language or jargon that is not clear?
- Would a different format (grouping and order of sections, use of headings, paragraphing) make the rules easier to understand?
- Would more (but shorter) sections be better?
- Could we improve clarity by adding tables, lists, or diagrams?
- What else could we do to make the rules easier to understand?

Regulatory Procedures

Executive Order 12866

We have consulted with the Office of Management and Budget (OMB) and determined that these proposed rules meet the requirements for a significant regulatory action under Executive Order 12866, as amended by Executive Order 13258. Thus, they were subject to OMB review.

Regulatory Flexibility Act

We certify that these proposed rules would not have a significant economic impact on a substantial number of small entities because they would affect only individuals. Thus, a regulatory flexibility analysis as provided in the Regulatory Flexibility Act, as amended, is not required.

Paperwork Reduction Act

These proposed rules contain reporting requirements at 2.00A and 102.00A. The public reporting burden is accounted for in the Information Collection Requests for the various forms that the public uses to submit information to SSA. Consequently, a 1-hour placeholder burden is being assigned to the specific reporting requirement(s) contained in these rules. We are seeking clearance of the burden referenced in these rules because they were not considered during the clearance of the forms. An Information Collection Request has been submitted to OMB. We are soliciting comments on the burden estimate; the need for the information; its practical utility; ways to enhance its quality, utility and clarity; and on ways to minimize the burden on respondents, including the use of automated collection techniques or other forms of information technology. Comments should be submitted or faxed to the Office of Management and Budget and to the Social Security Administration at the following addresses/numbers: Office of Management and Budget, Attn: Desk Officer for SSA, Fax Number: 202–395–6974. Social Security Administration, Attn: SSA Reports Clearance Officer, Rm. 1338 Annex Building, 6401 Security Boulevard, Baltimore, MD 21235–6401, Fax Number: 410–965–6400.

Comments can be received for up to 60 days after publication of this notice and will be most useful if received within 30 days of publication. To receive a copy of the OMB clearance package, you may call the SSA Reports Clearance Officer on 410–965–0454.

References

We consulted the following sources when developing these proposed rules:

Judie Charlton, MD, *et al.* ''A Comparison of Manual and Automated Kinetic Perimetry.'' Final Report: SSA–RFP–98–3537, n.d.

National Research Council, Committee on Vision, Commission on Behavioral and Social Sciences and Education. *Measurement of Visual Field and Visual Acuity for Disability Determination*. Washington, DC: National Academy Press, 1994.

National Research Council, Committee on Disability Determination for Individuals With Visual Impairments. *Visual Impairments: Determining Eligibility for Social Security Benefits*. Washington, DC: National Academy Press, 2002 (available at *http://www.nap.edu/catalog/10320.html?se_side*).

American Medical Association. *Guides to the Evaluation of Permanent Impairment*. Fifth edition, AMA Press, 2001:252, 287–295.

These references are included in the rulemaking record for these proposed rules and are available for inspection by interested individuals by making arrangements with the contact person shown in this preamble.

(Catalog of Federal Domestic Assistance Program Nos. 96.001, Social Security-Disability Insurance; 96.002, Social Security-Retirement Insurance; 96.004, Social Security-Survivors Insurance; and 96.006, Supplemental Security Income)

List of Subjects in 20 CFR Part 404

Administrative practice and procedure, Blind, Disability benefits, Old-Age, Survivors, and Disability Insurance, Reporting and recordkeeping requirements, Social Security.

Dated: May 11, 2005.

Jo Anne B. Barnhart,

Commissioner of Social Security.

For the reasons set forth in the preamble, we propose to amend subpart P of part 404 of chapter III of title 20 of the Code of Federal Regulations as set forth below:

PART 404—FEDERAL OLD-AGE, SURVIVORS AND DISABILITY INSURANCE (1950-)

1. The authority citation for subpart P of part 404 continues to read as follows:

Authority: Secs. 202, 205(a), (b), and (d)-(h), 216(i), 221(a) and (i), 222(c), 223, 225,

and 702(a)(5) of the Social Security Act (42 U.S.C. 402, 405(a), (b), and (d)-(h), 416(i), 421(a) and (i), 422(c), 423, 425, and 902(a)(5)); sec. 211(b), Pub. L. 104–193, 110 Stat. 2105, 2189.

Appendix 1 to Subpart P of Part 404—[Amended]

2. Appendix 1 to subpart P of part 404 is amended as follows:

a. Item 3 of the introductory text before part A of appendix 1 is amended by revising the expiration date.

b. Section 2.00A of part A of appendix 1 is revised.

c. Section 2.00C is added to part A of appendix 1.

d. Listing 2.02 of part A of appendix 1 is amended by revising the heading.

e. Listing 2.03 of part A of appendix 1 is revised.

f. Listing 2.04 of part A of appendix 1 is revised.

g. The reservation for listing 2.05 is removed.

h. Listing 2.06 of part A of appendix 1 is removed

i. Tables 1 and 2 of section 2.01 of part A of appendix 1 are revised.

j. Section 102.00A of part B of appendix 1 is revised.

k. Section 102.00C is added to part B of appendix.

l. Listing 102.02 of part B of appendix 1 is revised.

m. Listing 102.03 is added to part B of appendix 1.

n. Listing 102.04 is added to part B of appendix 1.

o. Tables 1 and 2 are added to section 102.01 of part B of appendix 1.

The revised text is set forth as follows:

Appendix 1 to Subpart P of Part 404—Listing of Impairments

* * * * *

3. Special Senses and Speech (2.00 and 102.00): (*Insert date 8 years from the effective date of the final rules*).

* * * * *

Part A

* * * * *

2.00 SPECIAL SENSES AND SPEECH

A. How do we evaluate visual disorders?

1. *What are visual disorders?* Visual disorders are abnormalities of the eye, the optic nerve, the optic tracts, or the brain that may cause a loss of visual acuity or visual fields. A loss of visual acuity limits your ability to distinguish detail, read, or do fine work. A loss of visual fields limits your ability to perceive visual stimuli in the peripheral extent of vision.

2. *What is statutory blindness?* Statutory blindness is blindness as defined in the Social Security Act (the Act). The Act defines blindness as visual acuity of 20/200 or less in the better eye with the use of a correcting lens. The Act also provides that an eye that has a visual field limitation such that the widest diameter of the visual field subtends an angle no greater than 20 degrees is considered as having visual acuity of 20/200 or less. You have statutory blindness if your visual disorder meets the criteria of 2.02 or 2.03A.

3. What Evidence Do We Need To Establish Statutory Blindness Under Title XVI?

For title XVI, the only evidence we need to establish statutory blindness is evidence showing that your visual acuity or visual field, in the better eye, meets the criteria in A2 above, provided that those measurements are consistent with the other evidence in your case record. We do not need to document the cause of your blindness. Also, there is no duration requirement for statutory blindness under title XVI (see §§ 416.981 and 416.983).

4. What Evidence Do We Need To Evaluate Visual Disorders, Including Those That Result in Statutory Blindness Under Title II?

a. To evaluate your visual disorder, we usually need a report of an eye examination that includes measurements of the best-corrected visual acuity or the extent of the visual fields, as appropriate. If there is a loss of visual acuity or visual fields, the cause of the loss must be documented. A standard eye examination will usually reveal the cause of any visual acuity loss. An eye examination can also reveal the cause of some types of visual field deficits. If the eye examination does not reveal the cause of the visual loss, we will request the information that was used to establish the presence of the visual disorder.

b. A diagnosis of cortical blindness (blindness due to a brain lesion) must be confirmed by documentation of the catastrophic event, such as a cardiac arrest or stroke, that caused the brain lesion. If neuroimaging was performed, we will request a copy of the report or other medical evidence that describes the findings in the report.

c. If your visual disorder does not satisfy the criteria in 2.02, 2.03, or 2.04, we will also request a description of how your visual disorder impacts your ability to function.

5. How Do We Measure Best-Corrected Visual Acuity?

a. *Testing for visual acuity*. When we need to measure your best-corrected visual acuity, we will use visual acuity testing that was carried out using Snellen methodology or any other testing methodology that is comparable to Snellen methodology.

b. *Determining best-corrected visual acuity*.

i. Best-corrected visual acuity is the optimal visual acuity attainable with the use of a corrective lens. In some instances, this assessment may be performed using a specialized lens; for example, a contact lens. We will use the visual acuity measurements obtained with a specialized lens only if you have demonstrated the ability to use the specialized lens on a sustained basis. However, we will not use visual acuity measurements obtained with telescopic lenses because they significantly reduce the visual field. Additionally, we will not use the results of visual evoked response testing or pinhole testing to determine best-corrected visual acuity.

ii. We will use the best-corrected visual acuity for distance in the better eye when we determine whether your loss of visual acuity satisfies the criteria in 2.02.

6. How Do We Measure Visual Fields?

a. *Testing for visual fields.*

i. We generally need visual field testing when you have a visual disorder that could result in visual field loss, such as glaucoma, retinitis pigmentosa, macular edema, or optic neuropathy, or when you display behaviors that suggest a visual field loss.

ii. When we need to measure the extent of your visual field loss, we will use visual field measurements obtained with an automated static threshold perimetry test performed on a perimeter, like the Humphrey Field Analyzer, that satisfies all of the following requirements:

A. The perimeter must use optical projection to generate the test stimuli.

B. The perimeter must have an internal normative database for automatically comparing your performance with that of the general population.

C. The perimeter must have a statistical analysis package that is able to calculate visual field indices, particularly mean deviation.

D. The perimeter must demonstrate the ability to correctly detect visual field loss and correctly identify normal visual fields.

E. The perimeter must demonstrate good test-retest reliability.

F. The perimeter must have undergone clinical validation studies by three or more independent laboratories with results published in peer-reviewed ophthalmic journals.

iii. The test must use a white size III Goldmann stimulus and a 31.5 apostilb (10 cd/m^2) white background. The stimuli locations must be no more than 6 degrees apart horizontally or vertically. Measurements must be reported on standard charts and include a description of the size and intensity of the test stimulus.

iv. To determine statutory blindness, we need a test that measures the central 24 to 30 degrees of the visual field; that is, the area measuring 24 to 30 degrees from the point of fixation. Acceptable tests include the Humphrey 30–2 or 24–2 tests.

v. To determine if the criterion in 2.03B is met, we need a test performed on a Humphrey field analyzer that measures the central 30 degrees of the visual field. (We can also use comparable results from other acceptable perimeters, for example, a mean defect of 22 on an acceptable Octopus test, to determine that the criterion in 2.03B is met.) We cannot use tests that do not measure the central 30 degrees of the visual field, such as the Humphrey 24–2 test, to determine if your impairment meets or medically equals 2.03B.

vi. We measure the extent of visual field loss by determining the portion of the visual field in which you can see a white III4e stimulus. As indicated above, the ''III'' refers to the standard Goldmann test stimulus size III. The ''4e'' refers to the standard Goldmann intensity filters used to determine the intensity of the stimulus.

vii. In automated static threshold perimetry, the intensity of the stimulus

varies. The intensity of the stimulus is expressed in decibels (dB). We need to determine the dB level that corresponds to a 4e intensity for the particular perimeter being used. We will then use the dB printout to determine which points would be seen at a 4e intensity level. For example, in Humphrey perimeters, a 10 dB stimulus is equivalent to a 4e stimulus. A dB level that is higher than 10 represents a dimmer stimulus, while a dB level that is lower than 10 represents a brighter stimulus. Therefore, for tests performed on Humphrey perimeters, any point seen at 10 dB or higher is a point that would be seen with a 4e stimulus.

viii. We can also use visual field measurements obtained using kinetic perimetry, such as the Humphrey ''SSA Test Kinetic'' or Goldmann perimetry. The test must use a white III4e stimulus projected on a white 31.5 apostilb (10 cd/m^2) background. In automated kinetic tests, such as the Humphrey ''SSA Test Kinetic,'' testing along a meridian stops when you see the stimulus. If we need additional information because your visual disorder has progressed to the point where it is likely to result in a significant limitation in the central visual field, such as a scotoma, we will supplement the automated kinetic perimetry with the results of a Humphrey 30–2 or comparable test.

ix. We will not use the results of visual field screening tests, such as confrontation tests, tangent screen tests, or automated static screening tests, to determine that your impairment meets or medically equals a listing or to evaluate your residual functional capacity. We will use normal results from visual field screening tests to determine whether the impact of your visual disorder on your visual field is severe when these test results are consistent with the other evidence in your case record. We will not consider normal test results to be consistent with the other evidence if either of the following applies:

A. The clinical findings indicate that your visual disorder has progressed to the point that it is likely to cause visual field loss.

B. You have a history of an operative procedure for retinal detachment.

b. *Use of corrective lenses.* You must not wear eyeglasses during the visual field examination because they limit your field of vision. Contact lenses or perimetric lenses may be used to correct visual acuity during the visual field examination in order to obtain the most accurate visual field measurements. For this single purpose, you do not need to demonstrate that you have the ability to use the contact or perimetric lenses on a sustained basis.

7. How Do We Calculate Visual Efficiency?

a. *Visual acuity efficiency.* We use the percentage shown in Table 1 that corresponds to the best-corrected visual acuity for distance in the better eye.

b. *Visual field efficiency.* We use kinetic perimetry to calculate visual field efficiency by adding the number of degrees seen along the eight principal meridians in the better eye and dividing by 500. (See Table 2.)

c. *Visual efficiency.* We calculate the percent of visual efficiency by multiplying the visual acuity efficiency by the visual field efficiency.

8. How Do We Evaluate Specific Visual Problems?

a. *Statutory blindness.* Most test charts that use Snellen methodology do not measure visual acuity between 20/100 and 20/200. Newer test charts, such as the Bailey-Lovie or the Early Treatment Diabetic Retinopathy Study (ETDRS), do measure visual acuity between 20/100 and 20/200. If your visual acuity is measured with one of these newer charts, and you cannot read any of the letters on the 20/100 line, we will determine that you have statutory blindness based on a visual acuity of 20/200 or less. Regardless of the type of test chart used, you do not have statutory blindness if you can read at least one letter on the 20/100 line.

b. *Blepharospasm.* This movement disorder is characterized by repetitive, involuntary, bilateral eye blinking. It generally responds to therapy. When therapy is not effective, we will evaluate this disorder on the basis of clinical observations or visual behaviors. If you have this disorder, you may have measurable visual acuities and visual fields that do not satisfy the criteria of 2.02 or 2.03. However, we must consider how the involuntary blinking affects your ability to maintain the measured visual acuities and visual fields over time.

c. *Scotoma.* A scotoma is a non-seeing area in the visual field surrounded by a seeing area. When we measure the visual field, we subtract the length of any scotoma, other than the normal blind spot, from the overall length of any diameter on which it falls.

* * * * *

C. How Do We Evaluate Impairments That Do Not Meet One of the Special Senses and Speech Listings?

1. These listings are only examples of common special senses and speech disorders that we consider severe enough to prevent an individual from doing any gainful activity. If your impairment(s) does not meet the criteria of any of these listings, we must also consider whether you have an impairment(s) that satisfies the criteria of a listing in another body system.

2. If you have a medically determinable impairment(s) that does not meet a listing, we will determine whether the impairment(s) medically equals a listing. (See §§ 404.1526 and 416.926.) If you have an impairment(s) that does not meet or medically equal a listing, you may or may not have the residual functional capacity to engage in substantial gainful activity. Therefore, we proceed to the fourth, and if necessary, the fifth steps of the sequential evaluation process in §§ 404.1520 and 416.920. When we decide whether you continue to be disabled, we use the rules in §§ 404.1594, 416.994, or 416.994a as appropriate.

2.01 Category of Impairments, Special Senses and Speech

2.02 *Loss of visual acuity.* Remaining vision in the better eye after best correction is 20/200 or less.

2.03 *Contraction of the visual field in the better eye,* with:

A. The widest diameter subtending an angle no greater than 20 degrees;

OR

B. A mean deviation of −22 or worse, determined by automated static threshold perimetry as described in 2.00A6a(v);

OR

C. A visual field efficiency of 20 percent or less as determined by kinetic perimetry (see 2.00A7b).

2.04 *Loss of visual efficiency.* Visual efficiency of the better eye of 20 percent or less after best correction (see 2.00A7c).

* * * * *

TABLE 1.—PERCENTAGE OF VISUAL ACUITY EFFICIENCY CORRESPONDING TO THE BEST-CORRECTED VISUAL ACUITY MEASUREMENT FOR DISTANCE IN THE BETTER EYE

Snellen		Percent visual acuity efficiency
English	Metric	Phakic or Pseudophakic
20/16	6/5	100
20/20	6/6	100
20/25	6/7.5	95
20/32	6/10	90
20/40	6/12	85
20/50	6/15	75
20/64	6/20	65
20/80	6/24	60
20/100	6/30	50

Table 2.—Chart of Visual Fields

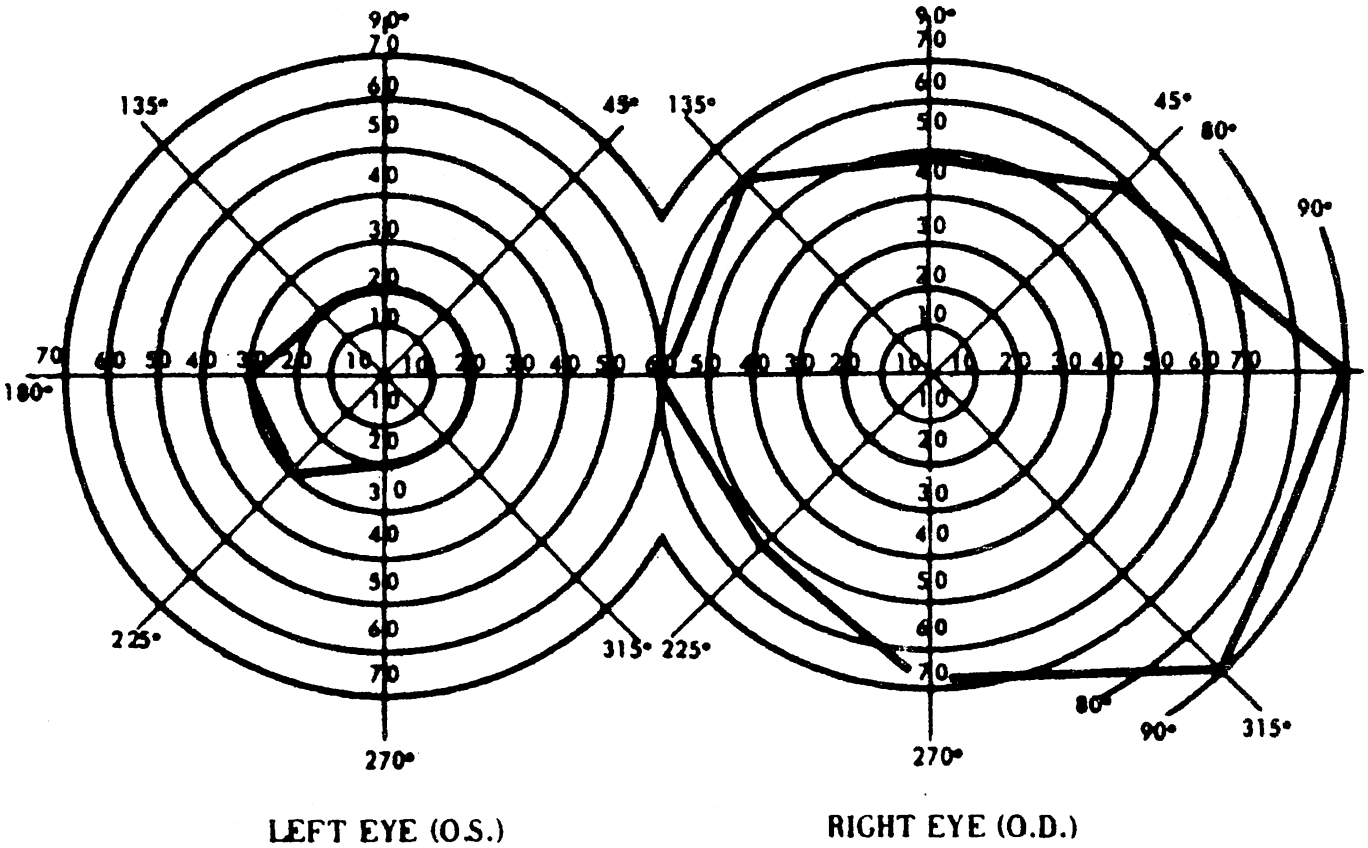

1. The diagram of the right eye illustrates the extent of a normal visual field as measured with a III4e stimulus. The sum of the eight principal meridians of this field is 500 degrees.

2. The diagram of the left eye illustrates a visual field contracted to 30 degrees in two meridians and to 20 degrees in the remaining six meridians. The percent of visual field efficiency of this field is: $(2 \times 30) + (6 \times 20) = 180 \div 500 = 0.36$ or 36 percent visual field efficiency.

* * * * *

Part B

* * * * *

102.00 SPECIAL SENSES AND SPEECH

A. How Do We Evaluate Visual Disorders?

1. What Are Visual Disorders?

Visual disorders are abnormalities of the eye, the optic nerve, the optic tracts, or the brain that may cause a loss of visual acuity or visual fields. A loss of visual acuity limits your ability to distinguish detail, read, do fine work, or perform other age-appropriate activities. A loss of visual fields limits your ability to perceive visual stimuli in the peripheral extent of vision.

2. What Is Statutory Blindness?

Statutory blindness is blindness as defined in the Social Security Act (the Act). The Act defines blindness as visual acuity of 20/200 or less in the better eye with the use of a correcting lens. The Act also provides that an eye that has a visual field limitation such that the widest diameter of the visual field subtends an angle no greater than 20 degrees is considered as having visual acuity of 20/200 or less. You have statutory blindness if your visual disorder meets the criteria of 102.02A, 102.02B, or 102.03A.

3. What Evidence Do We Need To Establish Statutory Blindness Under Title XVI?

For title XVI, the only evidence we need to establish statutory blindness is evidence showing that your visual acuity or visual field, in the better eye, meets the criteria in A2 above, provided that those measurements are consistent with the other evidence in your case record. We do not need to document the cause of your blindness. Also, there is no duration requirement for statutory blindness under title XVI (see §§ 416.981 and 416.983).

4. What Evidence Do We Need To Evaluate Visual Disorders, Including Those That Result in Statutory Blindness Under Title II?

a. To evaluate your visual disorder, we usually need a report of an eye examination that includes measurements of the best-corrected visual acuity or the extent of the visual fields, as appropriate. If there is a loss of visual acuity or visual fields, the cause of the loss must be documented. A standard eye examination will usually reveal the cause of any visual acuity loss. An eye examination can also reveal the cause of some types of visual field deficits. If the eye examination does not reveal the cause of the visual loss, we will request the information that was used to establish the presence of the visual disorder.

b. A diagnosis of cortical blindness (blindness due to a brain lesion) must be confirmed by documentation of the catastrophic event, such as a cardiac arrest or near drowning, that caused the brain lesion. If neuroimaging was performed, we will request a copy of the report or other medical evidence that describes the findings in the report.

c. If your visual disorder does not satisfy the criteria in 102.02, 102.03, or 102.04, we will also request a description of how your visual disorder impacts your ability to function.

5. How Do We Measure Best-Corrected Visual Acuity?

a. *Testing for visual acuity.*

i. When we need to measure your best-corrected visual acuity, we will use visual acuity testing that was carried out using Snellen methodology or any other testing methodology that is comparable to Snellen methodology.

ii. We consider tests such as the Landolt C test or the tumbling-E test, which are used to evaluate young children who are unable to participate in testing using Snellen methodology, to be comparable to testing using Snellen methodology. These alternate methods for measuring visual acuity should

be performed by specialists with expertise in assessment of childhood vision.

iii. If you are unable to participate in testing using Snellen methodology or other comparable testing, we will consider your fixation and visual following behavior. If both these behaviors are absent, we will consider the anatomical findings or the results of neuroimaging when this testing has been performed.

b. *Determining best-corrected visual acuity.*

i. Best-corrected visual acuity is the optimal visual acuity attainable with the use of a corrective lens. In some instances, this assessment may be performed using a specialized lens; for example, a contact lens. We will use the visual acuity measurements obtained with a specialized lens only if you have demonstrated the ability to use the specialized lens on a sustained basis. However, we will not use visual acuity measurements obtained with telescopic lenses because they significantly reduce the visual field. Additionally, we will not use the results of visual evoked response testing or pinhole testing to determine best-corrected visual acuity.

ii. We will use the best-corrected visual acuity for distance in the better eye when we determine whether your loss of visual acuity satisfies the criteria in 102.02A.

6. How Do We Measure Visual Fields?

a. *Testing for visual fields.*

i. We generally need visual field testing when you have a visual disorder that could result in visual field loss, such as glaucoma, retinitis pigmentosa, or optic neuropathy, or when you display behaviors that suggest a visual field loss.

ii. When we need to measure the extent of your visual field loss, we will use visual field measurements obtained with an automated static threshold perimetry test performed on a perimeter, like the Humphrey Field Analyzer, that satisfies all of the following requirements:

A. The perimeter must use optical projection to generate the test stimuli.

B. The perimeter must have an internal normative database for automatically comparing your performance with that of the general population.

C. The perimeter must have a statistical analysis package that is able to calculate visual field indices, particularly mean deviation.

D. The perimeter must demonstrate the ability to correctly detect visual field loss and correctly identify normal visual fields.

E. The perimeter must demonstrate good test-retest reliability.

F. The perimeter must have undergone clinical validation studies by three or more independent laboratories with results published in peer-reviewed ophthalmic journals.

iii. The test must use a white size III Goldmann stimulus and a 31.5 apostilb (10 cd/m2) white background. The stimuli locations must be no more than 6 degrees apart horizontally or vertically. Measurements must be reported on standard charts and include a description of the size and intensity of the test stimulus.

iv. To determine statutory blindness, we need a test that measures the central 24 to 30 degrees of the visual field; that is, the area measuring 24 to 30 degrees from the point of fixation. Acceptable tests include the Humphrey 30–2 or 24–2 tests.

v. To determine if the criterion in 102.03B is met, we need a test performed on a Humphrey field analyzer that measures the central 30 degrees of the visual field. (We can also use comparable results from other acceptable perimeters, for example, a mean defect of 22 on an acceptable Octopus test, to determine that the criterion in 102.03B is met.) We cannot use tests that do not measure the central 30 degrees of the visual field, such as the Humphrey 24–2 test, to determine if your impairment meets or medically equals 102.03B.

vi. We measure the extent of visual field loss by determining the portion of the visual field in which you can see a white III4e stimulus. As indicated above, the ''III'' refers to the standard Goldmann test stimulus size III. The ''4e'' refers to the standard Goldmann intensity filters used to determine the intensity of the stimulus.

vii. In automated static threshold perimetry, the intensity of the stimulus varies. The intensity of the stimulus is expressed in decibels (dB). We need to determine the dB level that corresponds to a 4e intensity for the particular perimeter being used. We will then use the dB printout to determine which points would be seen at a 4e intensity level. For example, in Humphrey perimeters, a 10 dB stimulus is equivalent to a 4e stimulus. A dB level that is higher than 10 represents a dimmer stimulus, while a dB level that is lower than 10 represents a brighter stimulus. Therefore, for tests performed on Humphrey perimeters, any point seen at 10 dB or higher is a point that would be seen with a 4e stimulus.

viii. We can also use visual field measurements obtained using kinetic perimetry, such as the Humphrey ''SSA Test Kinetic'' or Goldmann perimetry. The test must use a white III4e stimulus projected on a white 31.5 apostilb (10 cd/m2) background. In automated kinetic tests, such as the Humphrey ''SSA Test Kinetic,'' testing along a meridian stops when you see the stimulus. If we need additional information because your visual disorder has progressed to the point where it is likely to result in a significant limitation in the central visual field, such as a scotoma, we will supplement the automated kinetic perimetry with the results of a Humphrey 30–2 or comparable test.

ix. We will not use the results of visual field screening tests, such as confrontation tests, tangent screen tests, or automated static screening tests, to determine that your impairment meets or medically equals a listing, or functionally equals the listings. We will use normal results from visual field screening tests to determine whether the impact of your visual disorder on your visual field is severe when these test results are consistent with the other evidence in your case record. We will not consider normal test results to be consistent with the other evidence if either of the following applies:

A. The clinical findings indicate that your visual disorder has progressed to the point that it is likely to cause visual field loss.

B. You have a history of an operative procedure for retinal detachment.

b. *Use of corrective lenses.* You must not wear eyeglasses during the visual field examination because they limit your field of vision. Contact lenses or perimetric lenses may be used to correct visual acuity during the visual field examination in order to obtain the most accurate visual field measurements. For this single purpose, you do not need to demonstrate that you have the ability to use the contact or perimetric lenses on a sustained basis.

7. How Do We Calculate Visual Efficiency?

a. *Visual acuity efficiency.* We use the percentage shown in Table 1 that corresponds to the best-corrected visual acuity for distance in the better eye.

b. *Visual field efficiency.* We use kinetic perimetry to calculate visual field efficiency by adding the number of degrees seen along the eight principal meridians in the better eye and dividing by 500. (See Table 2.)

c. *Visual efficiency.* We calculate the percent of visual efficiency by multiplying the visual acuity efficiency by the visual field efficiency.

8. How Do We Evaluate Specific Visual Problems?

a. *Statutory blindness.* Most test charts that use Snellen methodology do not measure visual acuity between 20/100 and 20/200. Newer test charts, such as the Bailey-Lovie or the Early Treatment Diabetic Retinopathy Study (ETDRS), do measure visual acuity between 20/100 and 20/200. If your visual acuity is measured with one of these newer charts, and you cannot read any of the letters on the 20/100 line, we will determine that you have statutory blindness based on a visual acuity of 20/200 or less. Regardless of the type of test used, you do not have statutory blindness if you can read at least one letter on the 20/100 line.

b. *Blepharospasm.* This movement disorder is characterized by repetitive, involuntary, bilateral eye blinking. It generally responds to therapy. When therapy is not effective, we will evaluate this disorder on the basis of clinical observations or visual behaviors. If you have this disorder, you may have measurable visual acuities and visual fields that do not satisfy the criteria of 102.02 or 102.03. However, we must consider how the involuntary blinking affects your ability to maintain the measured visual acuities and visual fields over time.

c. *Scotoma.* A scotoma is a non-seeing area in the visual field surrounded by a seeing area. When we measure the visual field, we subtract the length of any scotoma, other than the normal blind spot, from the overall length of any diameter on which it falls.

* * * * *

C. How Do We Evaluate Impairments That Do Not Meet One of the Special Senses and Speech Listings?

1. These listings are only examples of common special senses and speech disorders that we consider severe enough to result in marked and severe functional limitations. If your impairment(s) does not meet the criteria of any of these listings, we must also

consider whether you have an impairment(s) that satisfies the criteria of a listing in another body system.

2. If you have a medically determinable impairment(s) that does not meet a listing, we will determine whether the impairment(s) medically equals a listing or functionally equals the listings. (See §§ 404.1526, 416.926, and 416.926a.) If you are receiving title XVI payments, we use the rules in § 416.994a when we decide whether you continue to be disabled.

* * * * *

102.02 *Loss of visual acuity.*

A. Remaining vision in the better eye after best correction is 20/200 or less;

OR

B. An inability to participate in testing using Snellen methodology or other comparable visual acuity testing and clinical findings that fixation and visual following behavior are absent in the better eye, and:

1. Abnormal anatomical findings indicating a visual acuity of 20/200 or worse in the better eye; or

2. Abnormal neuroimaging documenting damage to the cerebral cortex which would be expected to prevent the development, in the better eye, of a visual acuity better than 20/200; or

3. Abnormal electroretinogram documenting the presence of Leber's congenital amaurosis or achromatopsia.

102.03 *Contraction of the visual field in the better eye,* with:

A. The widest diameter subtending an angle no greater than 20 degrees;

OR

B. A mean deviation of -22 or worse, determined by automated static threshold perimetry as described in 102.00A6a(v);

OR

C. A visual field efficiency of 20 percent or less as determined by kinetic perimetry (see 102.00A7b).

102.04 *Loss of visual efficiency.* Visual efficiency of the better eye of 20 percent or less after best correction (see 102.00A7c).

* * * * *

TABLE 1.—PERCENTAGE OF VISUAL ACUITY EFFICIENCY CORRESPONDING TO THE BEST-CORRECTED VISUAL ACUITY MEASUREMENT FOR DISTANCE IN THE BETTER EYE.

Snellen		Percent visual acuity efficiency
English	Metric	Phakic or Pseudophakic
20/16	6/5	100
20/20	6/6	100
20/25	6/7.5	95
20/32	6/10	90
20/40	6/12	85
20/50	6/15	75
20/64	6/20	65
20/80	6/24	60
20/100	6/30	50

Table 2.—Chart of Visual Fields

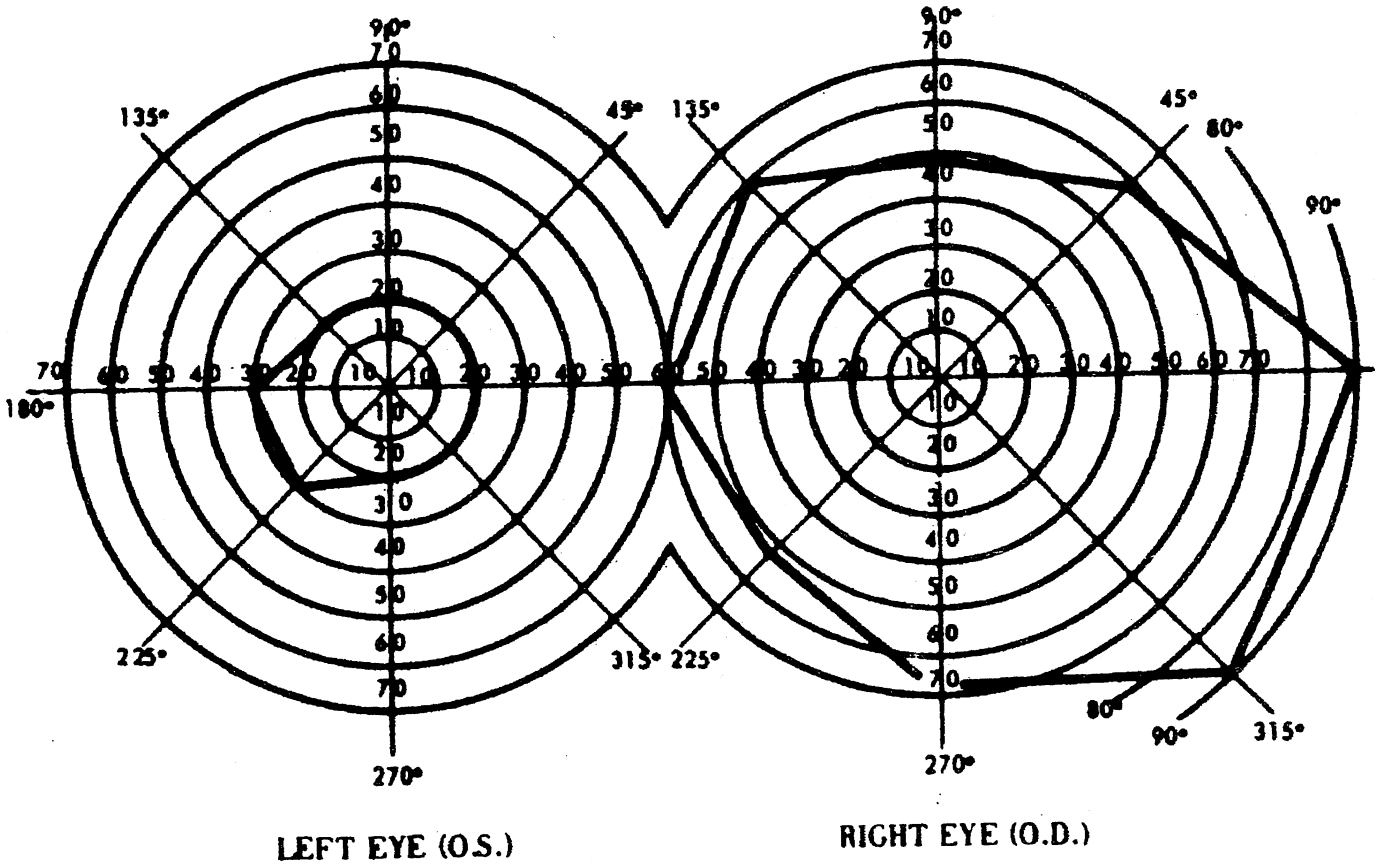

1. The diagram of the right eye illustrates the extent of a normal visual field as measured with a III4e stimulus. The sum of the eight principal meridians of this field is 500 degrees.

2. The diagram of the left eye illustrates a visual field contracted to 30 degrees in two meridians and to 20 degrees in the remaining six meridians. The percent of visual field efficiency of this field is: (2x30) + (6x20) = 180 ÷ 500 = 0.36 or 36 percent visual field efficiency.

* * * * *

[FR Doc. 05–16218 Filed 8–16–05; 8:45 am]

BILLING CODE 4191–02–P

DEPARTMENT OF HOMELAND SECURITY

Coast Guard

33 CFR Part 117

[CGD09–05–080]

RIN 1625–AA09

Drawbridge Operation Regulations; Sturgeon Bay Ship Canal, Sturgeon Bay, WI

AGENCY: Coast Guard, DHS.

ACTION: Notice of proposed rulemaking.

SUMMARY: The Coast Guard proposes to revise the operating regulations for the Michigan Street Bridge and establish permanent winter operating hours for the Bayview Bridge, both in Sturgeon Bay, WI. The proposed rule is expected to reflect the need for bridge openings during winter months and still provide for the reasonable needs of navigation.

DATES: Comments and related material must reach the Coast Guard on or before October 3, 2005.

ADDRESSES: You may mail comments and related material to Commander (obr), Ninth Coast Guard District, 1240 E. 9th Street, Room 2025, Cleveland, OH 44199–2060. The Ninth Coast Guard District maintains the public docket for this rulemaking. Comments and material received from the public, as well as documents indicated in this preamble as being available in the docket, will become part of this docket and will be available for inspection or copying at Commander (obr), Ninth Coast Guard District between 7 a.m. and 3 p.m., Monday through Friday, except Federal holidays.

FOR FURTHER INFORMATION CONTACT: Scot M. Striffler, Bridge Management Specialist, Ninth Coast Guard District, at (216) 902–6087.

SUPPLEMENTARY INFORMATION:

Request for Comments

We encourage you to participate in this rulemaking by submitting comments and related material. If you do so, please include your name and address, identify the docket number for this rulemaking (CGD09–05–080), indicate the specific section of this document to which each comment applies, and give the reason for each comment. Please submit all comments and related material in an unbound format, no larger than 8½ by 11 inches, suitable for copying. If you would like to know they reached us, please enclose a stamped, self-addressed postcard or envelope. We will consider all comments and material received during the comment period. We may change this proposed rule in view of them.

Public Meeting

We do not now plan to hold a public meeting. But you may submit a request for a meeting by writing to Commander (obr), Ninth Coast Guard District, at the address under **ADDRESSES** explaining why one would be beneficial. If we determine that one would aid this rulemaking, we will hold one at a time and place announced by a later notice in the **Federal Register**.

Background and Purpose

The Michigan Street Bridge at mile 4.3 over Sturgeon Bay Ship Canal is a single-leaf bascule bridge that provides a vertical clearance of 14 feet in the lowered position. On July 11, 1996, the bridge owner, the Wisconsin Department of Transportation (W–DOT), requested that the bridge be required to open for recreational vessels only on the hour, 24 hours a day, 7 days a week, between March 15 and December 31 of each year in order to reduce wear on the bridge. At that time, the operating regulation governing the bridge provided: From March 15 to December 31 of each year, the bridge was required to open on the hour between 8 a.m. and 6 p.m. for recreational vessels. Between 6 p.m. and 10 p.m., the draw was required to open for recreational vessels no more than on the hour and half-hour, and the bridge opened on signal from 10 p.m. to 8 a.m. From January 1 to March 14 of each year, the bridge was required to open on signal if notice was given at least 12 hours in advance of a vessel's intended time of passage through the draw. Throughout the year, the draw was required to open on signal for commercial vessels and all vessels seeking shelter from severe weather.

To test the requested schedule change, the Coast Guard authorized a temporary deviation from the existing regulation during the summer of 1996. The Coast Guard did not receive any comments, and W-DOT did not report any adverse comments, concerning the temporary deviation.

In February 1997, the Coast Guard published in the **Federal Register** an *Interim rule with request for comments* (62 FR 6875, February 14, 1997), which revised the operating regulation to require the bridge to open for recreational vessels only on the hour, 24 hours a day, 7 days a week, between March 15 and December 31 of each year. The requirement for notice at least 12 hours in advance during the winter months remained unchanged. It was intended that the operating requirements applicable between 6 p.m. and 8 a.m., and the provisions related to commercial vessels and vessels seeking shelter from severe weather, located at 33 CFR 117.1101(a)(2), (a)(3), and (b), were to be removed.

Although the removal of those sub-paragraphs was not codified, the bridge has operated according to the provisions of the Interim Rule since the rule's effective date on March 17, 1997. No negative comments concerning this operating schedule have been received.

W–DOT has now requested that the 12-hour advance notice requirement for winter operations be changed from January 1 through March 14 of each year to December 1 through March 14 of each year. The bridge opening logs provided by W–DOT showed a large number of openings during the month of December in 2002, 2003, and 2004, requiring the bridge to maintain full-time bridge tenders throughout the month of December. Based on these records, the Coast Guard concluded that W–DOT's requested change provides for the reasonable needs of navigation.

This proposed rule would make final the provisions of the Interim Rule, which require the Michigan Street Bridge to open between March 15 and December 31 of each year for recreational vessels on the hour, 24 hours a day, and on signal if more than 20 vessels have accumulated at the bridge, or if vessels are seeking shelter from severe weather. From January 1 through March 14 of each year, the bridge would continue to open for vessels if notice is provided at least 12 hours in advance.

There is no current specific drawbridge regulation for the Bayview (State Route 42/57) Bridge, mile 3.0 over Sturgeon Bay Ship Canal. The Bayview Bridge is a twin-leaf bascule drawbridge that provides a vertical clearance of 42 feet when in the lowered position. The

drawbridge is currently required to open on signal at all times all year long.

Every year since approximately 1992, the Coast Guard has granted a winter operating schedule, effective from January 1 to March 14, under the provisions of 33 CFR 117.45. W-DOT requested that the Coast Guard implement a permanent winter operating schedule for this drawbridge.

W–DOT requests that the schedule for the Bayview Bridge change to allow it to open for vessels when notice is provided at least 12 hours in advance between December 1 and March 14 of each year. The Coast Guard requested copies of bridge opening logs from W–DOT for the Bayview Bridge. The bridge logs revealed that a total of 9 openings were requested in December 2002, 6 openings in December 2003, and 3 openings in December 2004. The Coast Guard believes that the small number of requested openings at Bayview Bridge during the month of December in the three previous years signifies that the request to require notice at least 12 hours in advance between December 1 and March 14 each year would be reasonable.

Discussion of Proposed Rule

The Coast Guard proposes to revise 33 CFR 117.1101 by making permanent the Michigan Street Bridge schedule that has been implemented since 1997, with a one month extension of the winter operating rules. Between March 15 and December 31 each year, the bridge would open on the hour, 24 hours a day for recreational vessels, and on signal if more than 20 vessels accumulate at the bridge or vessels are seeking shelter from severe weather. All vessels would need to provide notice at least 12 hours in advance between January 1 and March 14 of each year.

A new regulation for Bayview Bridge would be established. The bridge would open on signal at all times for all vessels between March 15 and November 30 of each year. All vessels would need to provide notice at least 12 hours in advance between December 1 and March 14 of each year.

Regulatory Evaluation

This proposed rule is not a ''significant regulatory action'' under section 3(f) of Executive Order 12866, Regulatory Planning and Review, and does not require an assessment of potential costs and benefits under section 6(a)(3) of that Order. The Office of Management and Budget has not reviewed it under that Order. It is not ''significant'' under the regulatory policies and procedures of the Department of Homeland Security.

We expect the economic impact of this proposed rule to be so minimal that a full Regulatory Evaluation under the regulatory policies and procedures of DHS is unnecessary.

The Coast Guard expects minimal public impact from the proposed schedule. The operating hours for recreational vessels at Michigan Street Bridge between March 15 and December 31 has been in place since 1997 with no known adverse effects. The proposed winter operating schedule for both the Michigan Street and Bayview Bridges would continue to provide openings for vessels with 12-hours advance notice.

Small Entities

Under the Regulatory Flexibility Act (5 U.S.C. 601–612), we have considered whether this proposed rule would have a significant economic impact on a substantial number of small entities. The term ''small entities'' comprises small businesses, not-for-profit organizations that are independently owned and operated and are not dominant in their fields, and governmental jurisdictions with populations of less than 50,000.

The Coast Guard certifies under 5 U.S.C. 605(b) that this proposed rule would not have a significant economic impact on a substantial number of small entities.

The proposed schedule for Michigan Street Bridge is identical to the schedule that has been in place since 1997, with no significant economic impacts reported to the Coast Guard by any entities. The Bayview Bridge schedule provides openings at all times between March 15 and November 30. Most recreational vessels do not operate past November 30. The winter schedule provides openings with 12-hours advance notice for all commercial operators.

If you think that your business, organization, or governmental jurisdiction qualifies as a small entity and that this rule would have a significant economic impact on it, please submit a comment (*see* **ADDRESSES**) explaining why you think it qualifies and how and to what degree this rule would economically affect it.

Assistance for Small Entities

Under section 213(a) of the Small Business Regulatory Enforcement Fairness Act of 1996 (Pub. L. 104–121), we want to assist small entities in understanding this proposed rule so that they can better evaluate its effects on them and participate in the rulemaking. If the rule would affect your small business, organization, or governmental jurisdiction and you have questions concerning its provisions or options for compliance, please contact Scot M. Striffler, Bridge Management Specialist, Ninth Coast Guard District, at (216) 902–6087. The Coast Guard will not retaliate against small entities that question or complain about this rule or any policy or action of the Coast Guard.

Collection of Information

This proposed rule would call for no new collection of information under the Paperwork Reduction Act of 1995 (44 U.S.C. 3501–3520).

Federalism

A rule has implications for federalism under Executive Order 13132, Federalism, if it has a substantial direct effect on State or local governments and would either preempt State law or impose a substantial direct cost of compliance on them. We have analyzed this proposed rule under that Order and have determined that it does not have implications for federalism.

Unfunded Mandates Reform Act

The Unfunded Mandates Reform Act of 1995 (2 U.S.C. 1531–1538) requires Federal agencies to assess the effects of their discretionary regulatory actions. In particular, the Act addresses actions that may result in the expenditure by a State, local, or tribal government, in the aggregate, or by the private sector of $100,000,000 or more in any one year. Though this proposed rule will not result in such an expenditure, we do discuss the effects of this rule elsewhere in this preamble.

Taking of Private Property

This proposed rule would not affect a taking of private property or otherwise have taking implications under Executive Order 12630, Governmental Actions and Interference with Constitutionally Protected Property Rights.

Civil Justice Reform

This proposed rule meets applicable standards in sections 3(a) and 3(b)(2) of Executive Order 12988, Civil Justice Reform, to minimize litigation, eliminate ambiguity, and reduce burden.

Protection of Children

We have analyzed this proposed rule under Executive Order 13045, Protection of Children from Environmental Health Risks and Safety Risks. This rule is not an economically significant rule and would not create an environmental risk to health or risk to safety that might disproportionately affect children.

Indian Tribal Governments

This proposed rule does not have tribal implications under Executive Order 13175, Consultation and Coordination with Indian Tribal Governments, because it would not have a substantial direct effect on one or more Indian tribes, on the relationship between the Federal Government and Indian tribes, or on the distribution of power and responsibilities between the Federal Government and Indian tribes.

Energy Effects

We have analyzed this proposed rule under Executive Order 13211, Actions Concerning Regulations That Significantly Affect Energy Supply, Distribution, or Use. We have determined that it is not a ''significant energy action'' under that order because it is not a ''significant regulatory action'' under Executive Order 12866 and is not likely to have a significant adverse effect on the supply, distribution, or use of energy. The Administrator of the Office of Information and Regulatory Affairs has not designated it as a significant energy action. Therefore, it does not require a Statement of Energy Effects under Executive Order 13211.

Technical Standards

The National Technology Transfer and Advancement Act (NTTAA) (15 U.S.C. 272 note) directs agencies to use voluntary consensus standards in their regulatory activities unless the agency provides Congress, through the Office of Management and Budget, with an explanation of why using these standards would be inconsistent with applicable law or otherwise impractical. Voluntary consensus standards are technical standards (*e.g.,* specifications of materials, performance, design, or operation; test methods; sampling procedures; and related management systems practices) that are developed or adopted by voluntary consensus standards bodies.

This proposed rule does not use technical standards. Therefore, we did not consider the use of voluntary consensus standards.

Environment

We have analyzed this proposed rule under Commandant Instruction M16475.lD, which guides the Coast Guard in complying with the National Environmental Policy Act of 1969 (NEPA) (42 U.S.C. 4321–4370f), and have concluded that there are no factors in this case that would limit the use of a categorical exclusion under section 2.B.2 of the Instruction. Therefore, this proposed rule is categorically excluded, under figure 2–1, paragraph (32)(e) of the Instruction, from further environmental documentation.

List of Subjects in 33 CFR Part 117

Bridges.

Regulations

For the reasons discussed in the preamble, the Coast Guard proposes to amend 33 CFR part 117 as follows:

PART 117—DRAWBRIDGE OPERATION REGULATIONS

1. The authority citation for part 117 continues to read as follows:

Authority: 33 U.S.C. 499; Department of Homeland Security Delegation No. 0170.1; 33 CFR 1.05–1(g); section 117.255 also issued under the authority of Pub. L. 102–587, 106 Stat. 5039.

2. Revise section 117.1101 to read as follows:

§ 117.1101 Sturgeon Bay.

(a) The draw of the Michigan Street Bridge, mile 4.3 at Sturgeon Bay, shall open as follows:

(1) From March 15 through December 31, the draw need open on signal for recreational vessels only on the hour, 24 hours a day. However, if more than 20 vessels have accumulated at the bridge, or vessels are seeking shelter from severe weather, the bridge shall open on signal.

(2) From January 1 through March 14, the draw shall open on signal if notice is given at least 12 hours in advance of a vessel's time of intended passage.

(b) The draw of the Bayview (SR 42/57) Bridge, mile 3.0 at Sturgeon Bay, shall open as follows:

(1) From March 15 through November 30, the draw shall open on signal.

(2) From December 1 through March 14, the draw shall open on signal if notice is given at least 12 hours in advance of a vessel's time of intended passage.

Dated: July 25, 2005.

R.J. Papp, Jr.,

Rear Admiral, U.S. Coast Guard, Commander, Ninth Coast Guard District.

[FR Doc. 05–16285 Filed 8–16–05; 8:45 am]

BILLING CODE 4910–15–P

ENVIRONMENTAL PROTECTION AGENCY

[OPP–2004–0404; FRL–7733–6]

40 CFR Part 155

Pesticides; Procedural Regulations for Registration Review; Availability of a Draft Schedule for Registration Review

AGENCY: Environmental Protection Agency (EPA).

ACTION: Notice of availability.

SUMMARY: EPA is announcing availability of a draft schedule for the registration review of pesticides mandated in section 3(g) of the Federal Insecticide, Fungicide, and Rodenticide Act (FIFRA). EPA is making the draft schedule available to assist the public in its review of the proposed procedural regulations for registration review that EPA published on July 13, 2005. To develop the draft schedule, EPA used procedures described in the July 13, 2005 proposal. The draft schedule is, in effect, a model schedule which shows how the Agency could sequence pesticide reviews to meet the goal of reviewing each pesticide's registration every 15 years. Although the Agency is not seeking comment on the draft schedule, you may include comments on the draft schedule in your comments on the proposed procedural regulations for the registration review of pesticides.

FOR FURTHER INFORMATION CONTACT: Kennan Garvey, Special Review and Reregistration Division (7508C), Office of Pesticide Programs, Environmental Protection Agency, 1200 Pennsylvania Ave., NW., Washington, DC 20460–0001; telephone number: 703–305–7106; fax number: 703–308–8041; e-mail address:*garvey.kennan@epa.gov*.

SUPPLEMENTARY INFORMATION:

I. General Information

A. Does this Action Apply to Me?

You may be potentially affected by this action if you hold pesticide registrations. Pesticide users or other persons interested in the regulation of the sale, distribution, or use of pesticides may also be interested in this action. Potentially affected entities may include, but are not limited to:

- Producers of pesticide products (NAICS code 32532)
- Producers of antifoulant paints (NAICS code 32551)
- Producers of antimicrobial pesticides (NAICS code 32561)
- Producers of nitrogen stabilizer products (NAICS code 32531)
- Producers of wood preservatives (NAICS code 32519)

This listing is not intended to be exhaustive, but rather provides a guide for readers regarding entities likely to be affected by this action. Other types of entities not listed in this unit could also be affected. The North American Industrial Classification System (NAICS) codes have been provided to assist you and others in determining whether this action might apply to certain entities. To determine whether you or your business may be affected by

this action, you should carefully examine the applicability provisions in proposed § 155.40 of the regulatory text of the **Federal Register** of July 13, 2005 (70 FR 40251) (FRL–7718–4). If you have any questions regarding the applicability of this action to a particular entity, consult the person listed under **FOR FURTHER INFORMATION CONTACT**.

B. How Can I Get Copies of this Document and Other Related Information?

1. *Docket.* EPA has established an official public docket for this action under docket identification (ID) number OPP–2004–0404. The official public docket consists of the documents specifically referenced in this action, any public comments received, and other information related to this action. Although a part of the official docket, the public docket does not include Confidential Business Information (CBI) or other information whose disclosure is restricted by statute. The official public docket is the collection of materials that is available for public viewing at the Public Information and Records Integrity Branch (PIRIB), Rm. 119, Crystal Mall #2, 1801 S. Bell St., Arlington, VA. This docket facility is open from 8:30 a.m. to 4 p.m., Monday through Friday, excluding legal holidays. The docket telephone number is (703) 305–5805.

2. *Electronic access.* You may access this**Federal Register** document electronically through the EPA Internet under the ''**Federal Register**'' listings at*http://www.epa.gov/fedrgstr/*.

An electronic version of the public docket is available through EPA's electronic public docket and comment system, EPA Dockets. You may use EPA Dockets at *http://www.epa.gov/edocket/* to view public comments, to access the index listing of the contents of the official public docket, and to access those documents in the public docket that are available electronically. Although not all docket materials may be available electronically, you may still access any of the publicly available docket materials through the docket facility identified in Unit I.B.1. Once in the system, select ''search,'' then key in the appropriate docket ID number.

II. Background

EPA is announcing the availability of a draft schedule for the registration review of pesticides. To develop the draft schedule, EPA used procedures described in proposed procedural regulations for the registration review of pesticides published in the **Federal Register** of July 13, 2005 (70 FR 40251). The draft schedule is, in effect, a model schedule which shows how the Agency could sequence pesticide reviews to meet the goal of reviewing each pesticide's registration every 15 years. As explained in the proposed rule, EPA plans to issue a registration review schedule after completing the final registration review rule, and then update the schedule annually.

The Agency has placed the draft schedule in the docket for the proposed procedural regulations for the registration review of pesticides, OPP–2004–0404. You may electronically access the draft schedule and the proposed procedural regulations from the Agency's E-docket at *http://www.epa.gov/edocket/*.

EPA is making the draft schedule available to assist the public in its review of the proposed procedural regulations for the registration review of pesticides. This notice provides additional information that can be considered when reviewing the proposed regulations, but does not impact the public comment period on the proposed procedural regulations for the registration review of pesticides that ends on October 11, 2005. Although the Agency is not seeking comment on the draft schedule, you may include comments on the draft schedule in your comments on the proposed procedural regulations for the registration review of pesticides. Instructions for submitting comments on the proposed regulations are provided in the **Federal Register** notice of July 13, 2005 (70 FR 40251).

EPA issued the proposed regulations for the registration review of pesticides under section 3(g) of FIFRA. The statute requires EPA to establish regulations for the periodic review of pesticides to assure that each pesticide registration continues to satisfy the FIFRA standard for registration. The goal is to review each pesticide every 15 years. The registration review program will replace the tolerance reassessment program and the reregistration program as the Agency's means for systematically reviewing existing pesticides.

List of Subjects

Environmental protection, Administrative practice and procedure, Agricultural commodities, Pesticides and pests, Reporting and recordkeeping requirements.

Dated: August 11, 2005.

Anne E. Lindsay,

Acting Director, Office of Pesticide Programs.

[FR Doc. 05–16298 Filed 8–16–05; 8:45 am]

BILLING CODE 6560–50–S

FEDERAL COMMUNICATIONS COMMISSION

47 CFR Part 73

[DA 05–2201; MB Docket No. 05–238; RM–11260]

Radio Broadcasting Services; Columbus, IN

AGENCY: Federal Communications Commission.

ACTION: Proposed rule.

SUMMARY: This document requests comments on a petition for rulemaking filed by Columbus Community Radio Corporation, licensee of Station WHUM–LP, Channel 253L1, Columbus, Indiana, requesting allotment of Channel 228A at Columbus, Indiana, and its reservation for noncommercial educational use. Channel 228A can be allotted and reserved for NCE use in compliance with the Commission's minimum distance separation requirements, with the imposition of a site restriction of 7.9 kilometers (4.9 miles) southeast at reference coordinates 39–09–06 NL and 85–52–09 WL.

DATES: Comments must be filed on or before September 19, 2005, and reply comments on or before October 4, 2005.

ADDRESSES: Secretary, Federal Communications Commission, 445 Twelfth Street, SW., Washington, DC 20554. In addition to filing comments with the FCC, interested parties should serve the petitioner as follows: Mitzi Quinn, President, Columbus Community Radio Corporation, 1325 Washington Street, Columbus, Indiana 47201.

FOR FURTHER INFORMATION CONTACT: Rolanda F. Smith, Media Bureau, (202) 418–2180.

SUPPLEMENTARY INFORMATION: This is a synopsis of the Commission's Notice of Proposed Rule Making, MB Docket No. 05–238, adopted July 27, 2005, and released July 29, 2005. The full text of this Commission decision is available for inspection and copying during normal business hours in the FCC's Reference Information Center at Portals II, CY–A257, 445 Twelfth Street, SW., Washington, DC. The complete text of this decision may also be purchased from the Commission's duplicating contractor, Best Copy and Printing, Inc., 445 12th Street, SW., Room CY–B402, Washington, DC, 20054, telephone 1–800–378–3160 or *http://www.BCPIWEB.com.* This document does not contain proposed information collection requirements subject to the Paperwork Reduction Act of 1995, Public Law 104–13. In addition,

therefore, it does not contain any proposed information collection burden ''for small business concerns with fewer than 25 employees,'' pursuant to the Small Business Paperwork Relief Act of 2002, Public Law 107–198, *see* 44 U.S.C. 3506(c)(4).

Provisions of the Regulatory Flexibility Act of l980 do not apply to this proceeding.

Members of the public should note that from the time a Notice of Proposed Rule Making is issued until the matter is no longer subject to Commission consideration or court review, all *ex parte* contacts are prohibited in Commission proceedings, such as this one, which involve channel allotments. See 47 CFR 1.1204(b) for rules governing permissible *ex parte* contacts.

For information regarding proper filing procedures for comments, see 47 CFR 1.415 and 1.420.

List of Subjects in 47 CFR Part 73

Radio, Radio broadcasting.

For the reasons discussed in the preamble, the Federal Communications Commission proposes to amend 47 CFR part 73 as follows:

PART 73—RADIO BROADCAST SERVICES

1. The authority citation for part 73 continues to read as follows:

Authority: 47 U.S.C. 154, 303, 334 and 336.

§ 73.202 [Amended]

2. Section 73.202(b), the Table of FM Allotments under Indiana, is amended by adding Channel *228A at Columbus.

Federal Communications Commission.

John A. Karousos,

Assistant Chief, Audio Division, Media Bureau.

[FR Doc. 05–16074 Filed 8–16–05; 8:45 am]

BILLING CODE 6712–01–P

FEDERAL COMMUNICATIONS COMMISSION

47 CFR Part 73

[DA 05–2215; MB Docket No. 05–246; RM–11263]

Radio Broadcasting Services; Meyersville and San Antonio, TX

AGENCY: Federal Communications Commission.

ACTION: Proposed rule.

SUMMARY: This document requests comments on a Petition for Rule Making filed by Charles Crawford requesting the allotment of Channel 261A at Meyersville, Texas, as that community's first local aural transmission service. To accommodate this allotment, Petitioner requests the reclassification of FM Station KCYY, Channel 262C, San Antonio, Texas, to specify operation on Channel 262C0 pursuant to the reclassification procedures adopted by the Commission. *See 1998 Biennial Regulatory Review—Streamlining of Radio Technical Rules in Parts 73 and 74 of the Commission's Rules,* 65 FR 79773 (December 20, 2000). In response to an Order to Show Cause why Station KCYY should not be downgraded from Channel 262C to 262C0, the licensee of FM Station KCYY stated that it would file an application meeting minimum Class C FM standards within the period required by our rules. Since such an application has not been filed, the Commission proposes to reclassify Station KCYY to Class C0. Channel 261A can be allotted with a site restriction 2.0 kilometers (1.2 miles) southwest of Meyersville, at reference coordinates 28–54–58 NL and 97–19–37 WL. To accommodate the proposed allotment, the Commission proposes the reclassification of FM Station KCYY to specify operation on Channel 262C0.

DATES: Comments must be filed on or before September 19, 2005, and reply comments on or before October 4, 2005. Any counterproposal filed in this proceeding need only protect FM Station KCYY, San Antonio, Texas, as a Class C0 allotment.

ADDRESSES: Federal Communications Commission, 445 Twelfth Street, SW., Washington, DC 20554. In addition to filing comments with the FCC, interested parties should serve the petitioner as follows: Charles Crawford, 4553 Bordeaux Avenue, Dallas, Texas 75205.

FOR FURTHER INFORMATION CONTACT: R. Barthen Gorman, Media Bureau, (202) 418–2180.

SUPPLEMENTARY INFORMATION: This is a synopsis of the Commission's *Notice of Proposed Rule Making,* MB Docket No. 05–246, adopted July 27, 2005, and released July 29, 2005. The complete text of this decision may also be purchased from the Commission's duplicating contractor, Best Copy and Printing, Inc., 445 12th Street, SW., Room CY–B402, Washington, DC 20054, telephone 1–800–378–3160 or *www.BCPIWEB.com.* This document does not contain proposed information collection requirements subject to the Paperwork Reduction Act of 1995, Public Law 104–13. In addition, therefore, it does not contain any proposed information collection burden ''for small business concerns with fewer than 25 employees,'' pursuant to the Small Business Paperwork Relief Act of 2002, Public Law 107–198, *see* 44 U.S.C. 3506(c)(4).

Provisions of the Regulatory Flexibility Act of 1980 do not apply to this proceeding.

Members of the public should note that from the time a Notice of Proposed Rule Making is issued until the matter is no longer subject to Commission consideration or court review, all *ex parte* contacts are prohibited in Commission proceedings, such as this one, which involve channel allotments. See 47 CFR 1.1204(b) for rules governing permissible *ex parte* contacts.

For information regarding proper filing procedures for comments, see 47 CFR 1.415 and 1.420.

List of Subjects in 47 CFR Part 73

Radio, Radio broadcasting.

For the reasons discussed in the preamble, the Federal Communications Commission proposes to amend 47 CFR part 73 as follows:

PART 73—RADIO BROADCAST SERVICES

1. The authority citation for part 73 continues to read as follows:

Authority: 47 U.S.C. 154, 303, 334 and 336.

§ 73.202 [Amended]

2. Section 73.202(b), the Table of FM Allotments under Texas is amended by adding Meyersville, Channel 261A, by removing Channel 262C and by adding Channel 262C0 at San Antonio.

Federal Communications Commission.

John A. Karousos,

Assistant Chief, Audio Division, Media Bureau.

[FR Doc. 05–16071 Filed 8–16–05; 8:45 am]

BILLING CODE 6712–01–P

FEDERAL COMMUNICATIONS COMMISSION

47 CFR Part 73

[DA 05–2206; MB Docket No. 05–249; RM–10778, RM–11259]

Radio Broadcasting Services; Glenmora and Marksville, LA and Orange, TX

AGENCY: Federal Communications Commission.

ACTION: Proposed rule.

SUMMARY: This document requests comments on two mutually exclusive Petitions for Rule Making. The first proposal, filed by Charles Crawford requests the allotment of Channel 292A at Glenmora, Louisiana, as that

community's first local aural transmission service. To accommodate this allotment, Crawford requests the reclassification of FM Station KIOC, Channel 291C, Orange, Texas, to specify operation on Channel 291C0 pursuant to the reclassification procedures adopted by the Commission. *See 1998 Biennial Regulatory Review—Streamlining of Radio Technical Rules in Parts 73 and 74 of the Commission's Rules,* 65 FR 79773 (2000). An Order to Show Cause was issued to Capstar TX Limited Partnership, licensee of FM Station KIOC to which no response was received. The second proposal, filed by Goudeau, Inc. proposes the allotment of Channel 292A at Marksville, Louisiana, as its second local service. A staff engineering analysis has determined that the reclassification of FM Station KIOC to specify operation on Channel 291C0 at Orange, Texas will eliminate any short spacing to the proposed Channel 292A at Glenmora, Louisiana. As a result, Channel 292A can be allotted to Glenmora, in conformity with the Commission's rules, provided there is a site restriction of 12.2 kilometers (7.6 miles) west at reference coordinates 31–00–35 NL and 92–42–30 WL. Alternatively, Channel 292A can be allotted to Marksville, Louisiana, consistent with the minimum distance separation requirements of § 73.207(b) of the Commission's rules, provided there is a site restriction of 9.7 kilometers (6 miles) west at reference coordinates 31–06–34 NL and 92–09–55 WL.

DATES: Comments must be filed on or before September 19, 2005, and reply comments on or before October 4, 2005. Any counterproposal filed in this proceeding need only protect FM Station KIOC, Orange, Texas, as a Class C0 allotment.

ADDRESSES: Federal Communications Commission, 445 Twelfth Street, SW., Washington, DC 20554. In addition to filing comments with the FCC, interested parties should serve the petitioner as follows: Charles Crawford, 4553 Bordeaux Avenue, Dallas, Texas 75205 and George L. Lyon, Jr. Esq., Counsel for Goudeau, Inc., Lukas, Nace, Gutierrez & Sachs, Chartered, 1111 19th Street, NW., Suite 1200, Washington, DC 20036.

FOR FURTHER INFORMATION CONTACT: Rolanda F. Smith, Media Bureau, (202) 418–2180.

SUPPLEMENTARY INFORMATION: This is a synopsis of the Commission's *Notice of Proposed Rule Making,* MB Docket No. 05–249, adopted July 27, 2005, and released July 29, 2005. The complete text of this decision may also be purchased from the Commission's duplicating contractor, Best Copy and Printing, Inc., 445 12th Street, SW., Room CY–B402, Washington, DC, 20054, telephone 1–800–378–3160 or *http://www.BCPIWEB.com.* This document does not contain proposed information collection requirements subject to the Paperwork Reduction Act of 1995, Public Law 104–13. In addition, therefore, it does not contain any proposed information collection burden ''for small business concerns with fewer than 25 employees,'' pursuant to the Small Business Paperwork Relief Act of 2002, Public Law 107–198, *see* 44 U.S.C. 3506(c)(4).

Provisions of the Regulatory Flexibility Act of l980 do not apply to this proceeding.

Members of the public should note that from the time a Notice of Proposed Rule Making is issued until the matter is no longer subject to Commission consideration or court review, all *ex parte* contacts are prohibited in Commission proceedings, such as this one, which involve channel allotments. See 47 CFR 1.1204(b) for rules governing permissible *ex parte* contacts.

For information regarding proper filing procedures for comments, see 47 CFR 1.415 and 1.420.

List of Subjects in 47 CFR Part 73

Radio, Radio broadcasting.

For the reasons discussed in the preamble, the Federal Communications Commission proposes to amend 47 CFR part 73 as follows:

PART 73—RADIO BROADCAST SERVICES

1. The authority citation for part 73 continues to read as follows:

Authority: 47 U.S.C. 154, 303, 334 and 336.

§ 73.202 [Amended]

2. Section 73.202(b), the Table of FM Allotments under Louisiana is amended by adding Glenmora, Channel 292A or Channel 292A at Marksville.

3. Section 73.202(b), the Table of FM Allotments under Texas is amended by removing Channel 291C and adding Channel 291C0 at Orange.

Federal Communications Commission.

John A. Karousos,

Assistant Chief, Audio Division, Media Bureau.

[FR Doc. 05–16070 Filed 8–16–05; 8:45 am]

BILLING CODE 6712–01–P

FEDERAL COMMUNICATIONS COMMISSION

47 CFR Part 73

[DA 05–2205; MB Docket No. 05–243]

Radio Broadcasting Services; Meeteetse, Wyoming

AGENCY: Federal Communications Commission.

ACTION: Proposed rule.

SUMMARY: The Audio Division, on its own motion, proposes the substitution of Channel 259C for vacant Channel 273C at Meeteetse, Wyoming. The current allotment of Channel 273C at Meeteetse is not in compliance with the minimum distance separation requirements of Section 73.207(b) of the Commission's rules. The proposed substitution would resolve an existing distance spacing conflict. In this instance, existing vacant Channel 273C at Meeteetse is short-spaced to the licensed site of FM Station KHOC, Channel 273C, Casper, Wyoming. Channel 273C at Meeteetse is located 260.3 kilometers apart from FM Station KHOC. The minimum distance spacing requirement is 290 kilometers. Channel 259C can be allotted to Meeteetse, Wyoming in conformity with the Commission's rules without a site restriction at reference coordinates 44–09–26 NL and 108–52–15 WL.

DATES: Comments must be filed on or before September 19, 2005 and reply comments on or before October 4, 2005.

ADDRESSES: Federal Communications Commission, 445 Twelfth Street, SW., Washington, DC 20554.

FOR FURTHER INFORMATION CONTACT: Rolanda F. Smith, Media Bureau, (202) 418–2180.

SUPPLEMENTARY INFORMATION: This is a summary of the Commission's Notice of Proposed Rule Making, MB Docket No. 05–243, adopted July 27, 2005, and released July 29, 2005. The full text of this Commission decision is available for inspection and copying during normal business hours in the Commission's Reference Center 445 Twelfth Street, SW., Washington, DC 20554. The complete text of this decision may also be purchased from the Commission's duplicating contractor, Best Copy and Printing, Inc., 445 12th Street, SW., Room CY–B402, Washington, DC, 20054, telephone 1–800–378–3160 or *http://www.BCPIWEB.com.* This document does not contain proposed information collection requirements subject to the Paperwork Reduction Act of 1995, Public Law 104–13. In addition,

therefore, it does not contain any proposed information collection burden ''for small business concerns with fewer than 25 employees,'' pursuant to the Small Business Paperwork Relief Act of 2002, Public Law 107–198, see 44 U.S.C. 3506(c)(4).

Provisions of the Regulatory Flexibility Act of l980 do not apply to this proceeding.

Members of the public should note that from the time a Notice of Proposed Rule Making is issued until the matter is no longer subject to Commission consideration or court review, all *ex parte* contacts are prohibited in Commission proceedings, such as this one, which involve channel allotments. See 47 CFR 1.1204(b) for rules governing permissible *ex parte* contact.

For information regarding proper filing procedures for comments, *see* 47 CFR 1.415 and 1.420.

List of Subjects in 47 CFR Part 73

Radio, Radio broadcasting.

For the reasons discussed in the preamble, the Federal Communications Commission proposes to amend 47 CFR part 73 as follows:

PART 73—RADIO BROADCAST SERVICES

1. The authority citation for part 73 continues to read as follows:

Authority: 47 U.S.C. 154, 303, 334 and 336.

§ 73.202 [Amended]

2. Section 73.202(b), the Table of FM Allotments under Wyoming, is amended by removing Channel 273C and adding Channel 259C at Meeteetse.

Federal Communications Commission.

John A. Karousos,

Assistant Chief, Audio Division, Media Bureau.

[FR Doc. 05–16069 Filed 8–16–05; 8:45 am]

BILLING CODE 6712–01–P

FEDERAL COMMUNICATIONS COMMISSION

47 CFR Part 73

[DA 05–2202; MB Docket No. 05–240; RM–11261]

Radio Broadcasting Services; Fernandina Beach and Yulee, FL

AGENCY: Federal Communications Commission.

ACTION: Proposed rule.

SUMMARY: The Audio Division seeks comment on a petition filed by Tama Radio Licenses of Jacksonville, FL, Inc., licensee of Station WJSJ(FM), Channel 287A, Fernandina Beach, Florida, proposing the reallotment of Channel 287A from Fernandina Beach to Yulee, Florida, as its first local service and modification of the Station WJSJ(FM) license accordingly. To accommodate this proposed reallotment, Petitioner also requests the relocation of the transmitter site for its FM Station WSJF, Channel 288C3, St. Augustine Beach. Channel 287A can be allotted to Yulee in conformity with the Commission's rules, provided there is a site restriction of 10.6 kilometers (6.6 miles) southeast at reference coordinates 30–34–00 NL and 81–31–30 WL. To facilitate the proposed Yulee reallotment, the transmitter site for FM Station WSJF can be relocated, consistent with the minimum distance separation requirements of Section 73.207(b) of the Commission's rules, provided there is a site restriction of 7.0 kilometers (4.3 miles) south at reference coordinates 29–46–53 NL and 81–15–25 WL. In accordance with the provisions of Section 1.420(i) of the Commission's rules, we shall not accept competing expressions of interest pertaining to the use of Channel 287A at Yulee, Florida.

DATES: Comments must be filed on or before September 19, 2005, and reply comments on or before October 4, 2005.

ADDRESSES: Federal Communications Commission, 445 Twelfth Street, SW., Washington, DC 20554. In addition to filing comments with the FCC, interested parties should serve the petitioner, as follows: Francisco R. Montero, Esq., Lee G. Petro, Esq., Counsel for Tama Radio Licenses of Jacksonville, FL, Inc., Fletcher, Heald & Hildreth, PLC, 1300 North 17th Street, 11th Floor, Arlington, Virginia 22209.

FOR FURTHER INFORMATION CONTACT: Rolanda F. Smith, Media Bureau, (202) 418–2180.

SUPPLEMENTARY INFORMATION: This is a summary of the Commission's Notice of Proposed Rule Making, MB Docket No. 05–240, adopted July 27, 2005, and released July 29, 2005. The full text of this Commission decision is available for inspection and copying during normal business hours in the Commission's Reference Center, 445 Twelfth Street, SW., Washington, DC 20554. The complete text of this decision may also be purchased from the Commission's duplicating contractor, Best Copy and Printing, Inc., 445 12th Street, SW., Room CY–B402, Washington, DC, 20054, telephone 1–800–378–3160 or *http://www.BCPIWEB.com.* This document does not contain proposed information collection requirements subject to the Paperwork Reduction Act of 1995, Public Law 104–13. In addition, therefore, it does not contain any proposed information collection burden ''for small business concerns with fewer than 25 employees,'' pursuant to the Small Business Paperwork Relief Act of 2002, Public Law 107–198, *see* 44 U.S.C. 3506(c)(4).

Provisions of the Regulatory Flexibility Act of 1980 do not apply to this proceeding.

Members of the public should note that from the time a Notice of Proposed Rule Making is issued until the matter is no longer subject to Commission consideration or court review, all *ex parte* contacts are prohibited in Commission proceedings, such as this one, which involve channel allotments. *See* 47 CFR 1.1204(b) for rules governing permissible *ex parte* contact.

For information regarding proper filing procedures for comments, *see* 47 CFR 1.415 and 1.420.

List of Subjects in 47 CFR Part 73

Radio, Radio broadcasting.

For the reasons discussed in the preamble, the Federal Communications Commission proposes to amend 47 CFR part 73 as follows:

PART 73—RADIO BROADCAST SERVICES

1. The authority citation for part 73 continues to read as follows:

Authority: 47 U.S.C. 154, 303, 334 and 336.

§ 73.202 [Amended]

2. Section 73.202(b), the Table of FM Allotments under Florida, is amended by removing Fernandina Beach, Channel 287A and by adding Yulee, Channel 287A.

Federal Communications Commission.

John A. Karousos,

Assistant Chief, Audio Division, Media Bureau.

[FR Doc. 05–16068 Filed 8–16–05; 8:45 am]

BILLING CODE 6712–01–P

FEDERAL COMMUNICATIONS COMMISSION

47 CFR Part 73

[DA 05–2219; MB Docket No. 05–248; RM–11262]

Radio Broadcasting Services; Falmouth, Midway and Owingsville, KY

AGENCY: Federal Communications Commission.

ACTION: Proposed rule.

SUMMARY: This document requests comments on a petition for rulemaking

filed jointly by L.M. Communications of Kentucky, LLC, licensee of Station WBTF(FM), Midway, Kentucky, and Gateway Radio Works, Inc., licensee of Station WKCA(FM), Owingsville, Kentucky, proposing to substitute Channel 298C3 for Channel 300A at Midway, Kentucky and modify Station WBTF's license accordingly, to substitute Channel 295A for 299A at a new site at Owingsville, Kentucky and modify Gateway's license for Station WKCA accordingly, and to substitute Channel 300A for Channel 299A at Falmouth, Kentucky and modify the Station WIOK(FM) license accordingly. Hammond Broadcasting, Inc., Ltd., licensee of Station WIOK(FM) is ordered to show cause why its license should not be modified to specify operation on Channel 300A in lieu of 299A at Owingsville. Channel 298C3 can be allotted at Midway, Kentucky at a site 12.3 kilometers (7.6 miles) southeast of the community at coordinates 38–06–25 NL and 84–33–19 WL. Channel 300A can be allotted at Falmouth at Station WIOK's current site 10.3 kilometers (6.4 miles) south of the community at coordinates 38–35–13 NL and 84–21–40 WL. Channel 295A can be allotted at Owingsville at Petitioners' requested site 14.0 kilometers (8.7 miles) east of the community 38–08–41 NL and 84–08–34 WL.

DATES: Comments must be filed on or before September 19, 2005, and reply comments on or before October 4, 2005.

ADDRESSES: Secretary, Federal Communications Commission, 445 Twelfth Street, SW., Washington, DC 20554. In addition to filing comments with the FCC, interested parties should serve the Petitioner as follows: John F. Garziglia, Esq., Michael H. Shacter, Esq., Womble, Carlyle, Sandridge, & Rice, PLLC, 1401 I Street, NW., Seventh Floor, Washington, DC 20005 (Counsel to Gateway Radio Works, Inc.); Sally A. Buckman, Esq., Leventhal, Senter & Lerman, 2000 K Street, NW., Suite 600, Washington, DC 20006 (Counsel to L.M. Communications of Kentucky, LLC).

FOR FURTHER INFORMATION CONTACT: Victoria McCauley, Media Bureau, (202) 418–2180.

SUPPLEMENTARY INFORMATION: This is a synopsis of the Commission's *Notice of Proposed Rule Making and Order to Show Cause*, MB Docket No. 05–248, adopted July 27, 2005, and released July 29, 2005. The full text of this Commission decision is available for inspection and copying during normal business hours in the FCC's Reference Information Center at Portals II, CY–A257, 445 Twelfth Street, SW., Washington, DC. This document may also be purchased from the Commission's duplicating contractors, Best Copy and Printing, Inc., 445 12th Street, SW., Room CY–B402, Washington, DC 20554, telephone 1–800–378–3160 or *http://www.BCPIWEB.com*.

Provisions of the Regulatory Flexibility Act of 1980 do not apply to this proceeding.

Members of the public should note that from the time a Notice of Proposed Rule Making is issued until the matter is no longer subject to Commission consideration or court review, all *ex parte* contacts are prohibited in Commission proceedings, such as this one, which involve channel allotments. See 47 CFR 1.1204(b) for rules governing permissible *ex parte* contacts.

For information regarding proper filing procedures for comments, see 47 CFR 1.415 and 1.420. This document does not contain proposed information collection requirements subject to the Paperwork Reduction Act of 1995, Public Law 104–13. In addition, therefore, it does not contain any proposed information collection burden ''for small business concerns with fewer than 25 employees,'' pursuant to the Small Business Paperwork Relief Act of 2002, Public Law 1107–198, *see 44* U.S.C. 3506(c)(4).

List of Subjects in 47 CFR Part 73

Radio, Radio broadcasting.

For the reasons discussed in the preamble, the Federal Communications Commission proposes to amend 47 CFR Part 73 as follows:

PART 73—RADIO BROADCAST SERVICES

1. The authority citation for Part 73 continues to read as follows:

Authority: 47 U.S.C. 154, 303, 334 and 336.

§ 73.202 [Amended]

2. Section 73.202(b), the Table of FM Allotments under Kentucky, is amended by removing Channel 298A and adding Channel 300A at Falmouth, by removing Channel 300A and adding Channel 298C3 at Midway, and by removing Channel 299A and adding Channel 295A at Owingsville.

Federal Communications Commission.

John A. Karousos,

Assistant Chief, Audio Division, Media Bureau.

[FR Doc. 05–16066 Filed 8–16–05; 8:45 am]

BILLING CODE 6712–01–P

FEDERAL COMMUNICATIONS COMMISSION

47 CFR Part 73

[DA 05–2209; MB Docket No. 05–244; RM–11257]

Radio Broadcasting Services; Fruit Cove and St. Augustine, FL

AGENCY: Federal Communications Commission.

ACTION: Proposed rule.

SUMMARY: This document requests comments on a petition for rulemaking filed by Renda Broadcasting Corporation of Nevada, licensee of Station WSOS–FM, Channel 231C3, St. Augustine, Florida. Petitioner proposes to reallot Channel 231C3 from St. Augustine to Fruit Cove, Florida, as the community's first local transmission service, and to modify the license for Station WSOS–FM to reflect the change of community. The proposed coordinates for Channel 231C3 at Fruit Cove are 30–01–27 NL and 81–36–19 WL with a site restriction of 10.2 kilometers (6.4 miles) south of the community.

DATES: Comments must be filed on or before September 19, 2005, and reply comments on or before October 4, 2005.

ADDRESSES: Secretary, Federal Communications Commission, 445 Twelfth Street, SW., Washington, DC 20554. In addition to filing comments with the FCC, interested parties should serve the Petitioner's counsel as follows: Mark N. Lipp, Esq., Vinson & Elkins L.L.P., 1455 Pennsylvania Ave., NW., Suite 600, Washington, DC 20004–1008.

FOR FURTHER INFORMATION CONTACT: Helen McLean, Media Bureau, (202) 418–2738.

SUPPLEMENTARY INFORMATION: This is a synopsis of the Commission's *Notice of Proposed Rule Making*, MB Docket No. 05–244, adopted July 27, 2005, and released July 29, 2005. The full text of this Commission decision is available for inspection and copying during normal business hours in the FCC's Reference Information Center at Portals II, CY–A257, 445 Twelfth Street, SW., Washington, DC. This document may also be purchased from the Commission's duplicating contractors, Best Copy and Printing, Inc., 445 12th Street, SW., Room CY–B402, Washington, DC 20554, telephone 1–800–378–3160 or *http://www.BCPIWEB.com*. This document does not contain proposed information collection requirements subject to the Paperwork Reduction Act of 1995, Public Law 104–13. In addition, therefore, it does not contain any

proposed information collection burden ''for small business concerns with fewer than 25 employees,'' pursuant to the Small Business Paperwork Relief Act of 2002, Public Law 107–198, see 44 U.S.C. 3506(c)(4).

Provisions of the Regulatory Flexibility Act of 1980 do not apply to this proceeding.

Members of the public should note that from the time a Notice of Proposed Rule Making is issued until the matter is no longer subject to Commission consideration or court review, all *ex parte* contacts are prohibited in Commission proceedings, such as this one, which involve channel allotments. See 47 CFR 1.1204(b) for rules governing permissible *ex parte* contacts.

For information regarding proper filing procedures for comments, see 47 CFR 1.415 and 1.420.

List of Subjects in 47 CFR Part 73

Radio, Radio broadcasting.

For the reasons discussed in the preamble, the Federal Communications Commission proposes to amend 47 CFR Part 73 as follows:

PART 73—RADIO BROADCAST SERVICES

1. The authority citation for Part 73 continues to read as follows:

Authority: 47 U.S.C. 154, 303, 334 and 336.

§ 73.202 [Amended]

2. Section 73.202(b), the Table of FM Allotments under Florida, is amended by removing Channel 231C3 at St. Augustine and by adding Fruit Cove, Channel 231C3.

Federal Communications Commission.

John A. Karousos,

Assistant Chief, Audio Division, Media Bureau.

[FR Doc. 05–16065 Filed 8–16–05; 8:45 am]

BILLING CODE 6712–01–P

FEDERAL COMMUNICATIONS COMMISSION

47 CFR Part 73

[DA 05–2208; MB Docket No. 05–245; RM–11264]

Radio Broadcasting Services; Sierra Vista and Tanque Verde, AZ

AGENCY: Federal Communications Commission.

ACTION: Proposed rule.

SUMMARY: The Audio Division seeks comment on a petition filed by CCR–Sierra Vista IV, LLC, licensee of FM Station KZMK, Channel 265A, Sierra Vista, Arizona, proposing the reallotment of Channel 265A from Sierra Vista to Tanque Verde, Arizona, as its first local service and modification of the FM Station KZMK(FM) license accordingly. Channel 265A can be allotted to Tanque Verde in conformity with the Commission's rules, provided there is a site restriction of 9.2 kilometers (5.7 miles) north at reference coordinates 32–19–59 NL and 110–45–19 WL. Tanque Verde is located within 320 kilometers (199 miles) of the U.S.-Mexican border and the proposed reallotment is short-spaced to Mexican vacant Channel 266B, Sasabe, SO by 3.1 kilometers. As such, Mexican concurrence for this proposed reallotment has been requested as a specially negotiated short-spaced limited allotment. In accordance with the provisions of Section 1.420(i) of the Commission's rules, we shall not accept competing expressions of interest pertaining to the use of Channel 265A at Tanque Verde.

DATES: Comments must be filed on or before September 19, 2005, and reply comments on or before October 4, 2005.

ADDRESSES: Federal Communications Commission, 445 Twelfth Street, SW., Washington, DC 20554. In addition to filing comments with the FCC, interested parties should serve counsel, as follows: Howard M. Liberman, Esq., Elizabeth A. Hammond, Esq., Counsel for CCR–Sierra Vista IV, LLC, Drinker Biddle & Reath LLP, 1500 K Street, NW., Suite 1100, Washington, DC 20005.

FOR FURTHER INFORMATION CONTACT: Rolanda F. Smith, Media Bureau, (202) 418–2180.

SUPPLEMENTARY INFORMATION: This is a summary of the Commission's Notice of Proposed Rule Making, MB Docket No. 05–245, adopted July 27, 2005, and released July 29, 2005. The full text of this Commission decision is available for inspection and copying during normal business hours in the Commission's Reference Center, 445 Twelfth Street, SW., Washington, DC 20554. The complete text of this decision may also be purchased from the Commission's duplicating contractor, Best Copy and Printing, Inc., 445 12th Street, SW., Room CY–B402, Washington, DC 20054, telephone 1–800–378–3160 or *http://www.BCPIWEB.com*. This document does not contain proposed information collection requirements subject to the Paperwork Reduction Act of 1995, Public Law 104–13. In addition, therefore, it does not contain any proposed information collection burden ''for small business concerns with fewer than 25 employees,'' pursuant to the Small Business Paperwork Relief Act of 2002, Public Law 107–198, see 44 U.S.C. 3506(c)(4).

Provisions of the Regulatory Flexibility Act of 1980 do not apply to this proceeding.

Members of the public should note that from the time a Notice of Proposed Rule Making is issued until the matter is no longer subject to Commission consideration or court review, all *ex parte* contacts are prohibited in Commission proceedings, such as this one, which involve channel allotments. See 47 CFR 1.1204(b) for rules governing permissible *ex parte* contact.

For information regarding proper filing procedures for comments, see 47 CFR 1.415 and 1.420.

List of Subjects in 47 CFR Part 73

Radio, Radio broadcasting.

For the reasons discussed in the preamble, the Federal Communications Commission proposes to amend 47 CFR part 73 as follows:

PART 73—RADIO BROADCAST SERVICES

1. The authority citation for part 73 continues to read as follows:

Authority: 47 U.S.C. 154, 303, 334 and 336.

§ 73.202 [Amended]

2. Section 73.202(b), the Table of FM Allotments under Arizona, is amended by removing Channel 265A at Sierra Vista and by adding Tanque Verde, Channel 265A.

Federal Communications Commission.

John A. Karousos,

Assistant Chief, Audio Division, Media Bureau.

[FR Doc. 05–16064 Filed 8–16–05; 8:45 am]

BILLING CODE 6712–01–P

DEPARTMENT OF TRANSPORTATION

National Highway Traffic Safety Administration

49 CFR Part 571

[Docket No. NHTSA–2005–22093]

RIN 2127–AJ31

Federal Motor Vehicle Safety Standards; Theft Protection

AGENCY: National Highway Traffic Safety Administration (NHTSA), Department of Transportation.

ACTION: Notice of proposed rulemaking (NPRM).

SUMMARY: Our safety standard on theft protection specifies vehicle performance

requirements intended to reduce the incidence of crashes resulting from theft and accidental rollaway of motor vehicles. As a result of technological advances in the area of theft protection, the terminology used in the regulatory text of the Standard has become outdated and incompatible with key-locking systems that employ electronic codes to lock and unlock the vehicle, and to enable engine activation. This document proposes to amend and reorganize the regulatory text of the Standard so that it better correlates to modern theft protection technology and reflects the agency's interpretation of the existing requirements. The proposed requirements would not impose any new substantive requirements on vehicle manufacturers.

DATES: You should submit your comments early enough to ensure that Docket Management receives them not later than October 17, 2005.

ADDRESSES: You may submit comments identified by the DOT Docket Number cited in the heading of this document by any of the following methods:

- Web Site: *http://dms.dot.gov.* Follow the instructions for submitting comments on the DOT electronic docket site.
- Fax: 1–202–493–2251.
- Mail: Docket Management Facility; U.S. Department of Transportation, 400 7th Street, SW., Nassif Building, Room PL–401, Washington, DC 20590–001.
- Hand Delivery: Room PL–401, 400 7th Street, SW., Washington, DC, between 9 a.m. and 5 p.m., Monday through Friday, except Federal holidays.
- Federal eRulemaking Portal: Go to *http://www.regulations.gov.* Follow the online instructions for submitting comments.

Instructions: All submissions must include the agency name and docket number. Note that all comments received will be posted without change to *http://dms.dot.gov* including any personal information provided. Please see the Privacy Act heading under Regulatory Notices.

Docket: For access to the docket to read background documents or comments received, go to *http://dms.dot.gov* at any time or to Room PL–401 on the plaza level of the Nassif Building, 400 7th Street, SW., Washington, DC, between 9 a.m. and 5 p.m., Monday through Friday, except Federal holidays.

FOR FURTHER INFORMATION CONTACT: For technical issues: Ms. Gayle Dalrymple, Office of Crash Avoidance Standards, NVS–123, NHTSA, 400 7th Street, SW., Washington, DC 20590. Telephone: (202) 366–5559. E-mail: *Gayle.Dalrymple@nhtsa.dot.gov.*

For legal issues: Mr. George Feygin, Office of the Chief Counsel, NCC–112, NHTSA, 400 7th Street, SW., Washington, DC 20590. Telephone: (202) 366–5834. E-mail: *George.Feygin@nhtsa.dot.gov.*

SUPPLEMENTARY INFORMATION:

Table of Contents

I. Background
II. Recent Letters of Interpretation Regarding FMVSS No. 114
III. VW Petition for Rulemaking
IV. Proposed Changes to the Regulatory Text
V. Effective Date of the Proposed Changes
VI. Request for Comments
VII. Rulemaking Analyses and Notices
A. Executive Order 12866 and DOT Regulatory Policies and Procedures
B. Executive Order 13132 (Federalism)
C. Executive Order 13045
D. Civil Justice Reform
E. Regulatory Flexibility Act
F. Paperwork Reduction Act
G. National Technology Transfer And Advancement Act
H. Unfunded Mandates Reform Act
I. Regulation Identifier Number (RIN)
J. Privacy Act
K. Plain Language
K. National Environmental Policy Act
VIII. Regulatory Text

I. Background

FMVSS No. 114, *Theft protection,* specifies vehicle performance requirements intended to reduce the incidence of crashes resulting from theft and accidental rollaway of motor vehicles. The standard applies to all passenger cars, and to trucks and multipurpose passenger vehicles with a GVWR of 4536 kilograms (10,000 pounds) or less. The standard first became effective on January 1, 1970.[1] The purpose of the standard was to prevent crashes caused by unauthorized use of unattended motor vehicles. Thus, the standard sought to ensure that the vehicle could not be easily operated without the key, and that the vehicle operator would not forget to remove the key from the ignition system upon exiting the vehicle.

In response to the problem of accidental rollaway crashes resulting from children inadvertently moving the automatic transmission lever to a neutral position when a stationary vehicle is parked on a slope, NHTSA later amended FMVSS No. 114 to require that the automatic transmission lever be locked in the ''park'' position before the key can be removed from the ignition system.[2] Subsequently, NHTSA amended these new requirements to permit an override device that would enable the vehicle operator to remove the key without the transmission being locked in ''park,'' and to move the transmission lever without using the key, under certain circumstances. The purpose of these override provisions was to address certain situations when it may be necessary to remove key without shifting the transmission lever because the vehicle has become disabled.[3]

While FMVSS No. 114 evolved to address not only theft protection, but also accidental rollaway prevention, the terminology used in the regulatory text has remained unchanged since its introduction more than 35 years ago. However, theft protection technology has advanced considerably during that time. As a result, certain provisions of the Standard have become increasingly ambiguous when applied to modern theft protection technology not contemplated by the Standard when it first went into effect.

For example, a number of vehicles now feature electronic systems. Typically, this involves a card or a similar device that is carried in an occupant's pocket or purse. The card carries an electronic code that acts as the key when it is transmitted to the vehicle's onboard locking system. The vehicle has a sensor that automatically unlocks the door and allows the vehicle operator to activate the engine, when it receives the code. The code-carrying device (*i.e.*, card or otherwise) never has to leave the vehicle operator's pocket or purse and is not inserted into the ignition module.

In response to manufacturers' requests, NHTSA issued a series of interpretation letters explaining how the Standard applied to various key-locking systems that did not utilize conventional keys, but instead relied on electronic codes to lock and unlock the vehicle, and to enable engine activation.

In 2002, NHTSA received a petition for rulemaking from Volkswagen of America (VW) asking the agency to amend a certain provision of the standard related to rollaway prevention, that will be discussed below. The agency decided to grant the petitioner's request. However, instead of addressing only the limited issues raised by VW, this document takes a broader approach and proposes to amend and reorganize the regulatory text of FMVSS No. 114 so that it better correlates to modern antitheft technology and reflects the agency's interpretation of the existing requirements.

[1] *See* 33 FR 6471 (April 24, 1968).

[2] *See* 55 FR 21868, (May 30, 1990).

[3] *See* 56 FR 12464 (March 26, 1991).

II. Recent Letters of Interpretation Regarding FMVSS No. 114

As noted above, the agency received several requests for legal interpretation of the requirements of FMVSS No. 114, as they apply to key-locking systems using various remote access devices. In response, the agency has stated that the electronic code transmitted from a remote device to the vehicle can be considered a ''key'' for the purposes of FMVSS No. 114.[4] We have also elaborated on how other provisions of the standard applies to electronic codes. For example, the agency stated that the narrow provisions related to electrical failure do not apply to electronically coded cards or other means used to enter an electronic key code into the locking system because those provisions were specifically crafted in the context of traditional keys.[5] We also explained that systems using an electronic code instead of conventional key would satisfy the rollaway prevention provisions if the code remained in the vehicle until the transmission gear is locked in the ''park'' position.

We have followed our interpretation of the definition of ''key'' in addressing other issues related to FMVSS No. 114. However, instead of relying on interpretations, and possibly facing additional questions in the future, the agency believes that it is appropriate to amend the regulatory text of FMVSS No. 114 so that it better correlates to modern antitheft technology and better reflects the agency's interpretation of the existing requirements. The specifics of our proposal are discussed in Section IV below.

III. VW Petition for Rulemaking

As previously discussed, in order to prevent accidental rollaways, the Standard currently requires that, for vehicles with automatic transmission, the transmission lever must be locked in ''park'' before the vehicle operator could remove the key.[6] However, the Standard also allows an optional ''override device'' which permits removal of the key without the automatic transmission being locked in ''park.'' The standard currently specifies that this override device ''* * * must be covered by a non-transparent surface which, when installed, prevents sight of and activation of the device * * *'' and that ''* * * The covering surface shall be removable only by use of a screwdriver or other tool.''

On October 29, 2002, NHTSA received a petition from VW asking the agency to amend S4.2.2(a) by removing provisions related to the override device covering. VW argued that these provisions are unnecessarily design-restrictive. VW indicated that there are other ways to ensure that the override device is not engaged inadvertently. Specifically, VW suggested that the agency allow an override device that requires using a tool to activate the override device while simultaneously removing the key.

The agency agrees that the regulatory text related to the override device cover is unnecessarily design-restrictive. Accordingly, this document grants the VW petition for rulemaking and proposes to amend the relevant portions of the regulatory text.

IV. Proposed Changes to the Regulatory Text

First, the agency is proposing to reorganize the regulatory text of the Standard such that the requirements related to theft protection are separated from the requirements intended to prevent accidental rollaway. Second, whenever possible, we are proposing to simplify the language used in the Standard to make it more clear. Finally, this document proposes to amend requirements and definitions that are unnecessarily design-restrictive.

While we discuss certain specific aspects of our proposal below, we encourage readers to carefully examine each paragraph of the proposed regulatory text because the entire text is revised.

1. We are proposing to revise the paragraphs explaining the Standard's scope and purpose to better reflect its goal of reducing the incidence of crashes resulting from theft and also accidental rollaway of motor vehicles. This change has no substantive significance because the Standard already addresses both safety concerns, and should not be viewed as broadening the scope of the current requirements.

2. We are proposing to revise the definition of ''key'' such that it makes it appropriate not only for conventional keys but also electronic codes and other potential means of unlocking and operating the vehicle. We believe that the new definition is broad enough to include not only electronic codes but also other technologies, including, for example, fingerprint recognition.

3. The current standard uses the term ''transmission shift lever'' in several instances to refer to the mechanism by which the driver changes the transmission from one gear to another. The agency believes that this term is unnecessarily design-specific. We have therefore substituted the term ''gear selection control'' for the term ''transmission shift lever.''

4. As previously discussed, S4.2.1 of the current Standard specifies that a key cannot be removed from the ignition until the transmission shift lever is locked in ''park.'' However, the Standard provides for an optional override device designed to allow (a) removal of the key when the transmission is not in the ''park,'' and (b) moving the transmission out of ''park'' when the key is not in the ignition. The Standard requires that the means for activating this device must be covered by a non-transparent surface which, when installed, prevents sight of and activation of the device. This covering surface can only be removable by use of a tool.[7]

In response to the VW petition described above, we are proposing to amend the requirement that the override device be covered by a non-transparent surface. Specifically, as an alternative to the current requirement, we are proposing to permit an override device that requires using a tool to activate the override device while simultaneously removing the key. We believe that requiring the use of a tool in order to activate this type of override device would involve sufficient complexity to prevent possible inadvertent activation by a child.

5. The current Standard allows only override systems that prevent steering before the key can be released, or the transmission lever can be shifted. The agency previously indicated that this requirement ensured that the theft protection aspects of the standard remained intact even in certain situations where the vehicle was disabled.[8] After further evaluating this aspect of our requirements, we tentatively conclude that an override device that would prevent forward self-mobility (such as an immobilizer) instead of steering would be just as effective. As explained in our September 24, 2004 interpretation letter to a party who requested confidentiality:

> We note that in promulgating FMVSS No. 114, the agency expressed concern about car thieves who could bypass the ignition lock. In response to this concern, the agency decided to require a device, which would prevent either self-mobility or steering even if the ignition lock were bypassed (see 33 FR 4471, April 27, 1968).

[4] *See http://www.nhtsa.dot.gov/cars/rules/interps/files/GF001689.html* and *http://www.nhtsa.dot.gov/cars/rules/interps/files/7044.html.*

[5] *See http://www.nhtsa.dot.gov/cars/rules/interps/files/GF001689.html.*

[6] *See* S4.2.2(a) of FMVSS No. 114.

[7] The purpose of this requirement was to ensure that children could not easily gain access to the override device (see 56 FR 12464 at 12466).

[8] *See id.* at 12467.

The engine control module immobilizer described in your letter satisfies the requirements of S4.2(b) because it locks out the engine control module if an attempt is made to start the vehicle without the correct key or to bypass the electronic ignition system. When the engine control module is locked, the vehicle is not capable of forward self-mobility because it is incapable of moving forward under its own power.[9]

Further, as explained in our May 27, 2003 interpretation letter to Jaguar, preventing steering after a moving vehicle has experienced a complete loss of electrical power would not be appropriate before a vehicle could be safely stopped.[10] Therefore, we are proposing to amend this aspect of the override provisions to allow manufacturers greater flexibility in designing their override devices and to allow manufacturers the choice to use electronic theft prevention devices, such as immobilizers, instead of using steering locks if they desire.

V. Effective Date of the Proposed Changes

As previously discussed, with the exception of the override provisions, which would be made less restrictive, the proposed amendments would not make substantive changes to the existing standard. Instead, we are proposing to amend and reorganize the regulatory text of FMVSS No. 114 so that it better correlates to modern theft protection technology and reflects the agency's interpretation of the existing requirements. We believe vehicle manufacturers would not have to make any changes to their vehicles if this proposal was made final. Accordingly, we propose to make this document effective 60 days following the publication of the final rule.

VI. Request for Comments

How Do I Prepare and Submit Comments?

Your comments must be written and in English. To ensure that your comments are correctly filed in the Docket, please include the docket number of this document in your comments. Your comments must not be more than 15 pages long.[11] We established this limit to encourage you to write your primary comments in a concise fashion. However, you may attach necessary additional documents to your comments. There is no limit on the length of the attachments. Please submit two copies of your comments, including the attachments, to Docket Management at the address given above under **ADDRESSES.** Comments may also be submitted to the docket electronically by logging onto the Docket Management System Web site at *http://dms.dot.gov.* Click on ''Help & Information'' or ''Help/Info'' to obtain instructions for filing the document electronically. If you are submitting comments electronically as a PDF (Adobe) file, we ask that the documents submitted be scanned using Optical Character Recognition (OCR) process, thus allowing the agency to search and copy certain portions of your submissions.[12]

Please note that pursuant to the Data Quality Act, in order for substantive data to be relied upon and used by the agency, it must meet the information quality standards set forth in the OMB and DOT Data Quality Act guidelines. Accordingly, we encourage you to consult the guidelines in preparing your comments. OMB's guidelines may be accessed at *http://www.whitehouse.gov/omb/fedreg/reproducible.html.* DOT's guidelines may be accessed at *http://dmses.dot.gov/submit/DataQualityGuidelines.pdf.*

How Can I Be Sure That My Comments Were Received?

If you wish Docket Management to notify you upon its receipt of your comments, enclose a self-addressed, stamped postcard in the envelope containing your comments. Upon receiving your comments, Docket Management will return the postcard by mail.

How Do I Submit Confidential Business Information?

If you wish to submit any information under a claim of confidentiality, you should submit three copies of your complete submission, including the information you claim to be confidential business information, to the Chief Counsel, NHTSA, at the address given above under **FOR FURTHER INFORMATION CONTACT**. In addition, you should submit two copies, from which you have deleted the claimed confidential business information, to Docket Management at the address given above under **ADDRESSES.** When you send a comment containing information claimed to be confidential business information, you should include a cover letter setting forth the information specified in our confidential business information regulation.[13]

Will the Agency Consider Late Comments?

We will consider all comments that Docket Management receives before the close of business on the comment closing date indicated above under **DATES**. To the extent possible, we will also consider comments that Docket Management receives after that date. If Docket Management receives a comment too late for us to consider in developing a final rule (assuming that one is issued), we will consider that comment as an informal suggestion for future rulemaking action.

How Can I Read the Comments Submitted by Other People?

You may read the materials placed in the docket for this document (*e.g.*, the comments submitted in response to this document by other interested persons) by going to the street address given above under **ADDRESSES.** The hours of the Docket Management System (DMS) are indicated above in the same location.

You may also read the materials on the Internet. To do so, take the following steps:

(1) Go to the Web page of the Department of Transportation DMS (*http://dms.dot.gov/search/searchFormSimple.cfm*).

(2) On that page type in the five-digit docket number cited in the heading of this document. After typing the docket number, click on ''search.''

(3) On the next page (''Docket Search Results''), which contains docket summary information for the materials in the docket you selected, scroll down and click on the desired materials. You may download the materials.

VII. Rulemaking Analyses and Notices

A. Executive Order 12866 and DOT Regulatory Policies and Procedures

This rulemaking document was not reviewed under Executive Order 12866, ''Regulatory Planning and Review.'' The agency has considered the impact of this proposal under the Department of Transportation's regulatory policies and procedures, and has determined that it is not significant.

This document proposes to amend and reorganize the regulatory text of 49 CFR 571.114 so that it better correlates to modern theft protection technology and better reflects the agency's interpretation of the existing requirements. Additionally, this document proposes to make certain

[9] *http://www.nhtsa.dot.gov/cars/rules/interps/files/GF005229–2.html.*

[10] *http://www.nhtsa.dot.gov/cars/rules/interps/files/GF001689.html.*

[11] *See* 49 CFR 553.21.

[12] Optical character recognition (OCR) is the process of converting an image of text, such as a scanned paper document or electronic fax file, into computer-editable text.

[13] *See* 49 CFR part 512.

provisions of 49 CFR 571.114 less restrictive. If made final, the vehicle manufacturers would not have to make any changes to their vehicles as a result of this rule. The impacts of this proposed rule are so minor that we determined that a separate regulatory evaluation is not needed.

B. Executive Order 13132 (Federalism)

The agency has analyzed this proposal in accordance with the principles and criteria set forth in Executive Order 13132. This proposal would not have a substantial direct effects on the States, on the relationship between the national government and the States, or on the distribution of power and responsibilities among the various levels of government, as specified in Executive Order 13132.

C. Executive Order 13045

Executive Order 13045 (62 FR 19885, April 23, 1997) applies to any rule that: (1) is determined to be ''economically significant'' as defined under E.O. 12866, and (2) concerns an environmental, health or safety risk that NHTSA has reason to believe may have a disproportionate effect on children. If the regulatory action meets both criteria, we must evaluate the environmental health or safety effects of the planned rule on children, and explain why the planned regulation is preferable to other potentially effective and reasonably feasible alternatives considered by us.

This proposal is not subject to the Executive Order 13045 because it is not economically significant as defined in E.O. 12866 and does not involve decisions based on environmental, safety or health risks having a disproportionate impact on children.

D. Civil Justice Reform

This final rule does not have any retroactive effect. Under 49 U.S.C. 21403, whenever a Federal motor vehicle safety standard is in effect, a State may not adopt or maintain a safety standard applicable to the same aspect of performance which is not identical to the Federal standard, except to the extent that the state requirement imposes a higher level of performance and applies only to vehicles procured for the State's use. 49 U.S.C. 21461 sets forth a procedure for judicial review of final rules establishing, amending or revoking Federal motor vehicle safety standards. That section does not require submission of a petition for reconsideration or other administrative proceedings before parties may file suit in court.

E. Regulatory Flexibility Act

The Regulatory Flexibility Act of 1980 (5 U.S.C. 601 *et seq.*) requires agencies to evaluate the potential effects of their proposed rules on small businesses, small organizations and small governmental jurisdictions. I have considered the possible effects of this rulemaking action under the Regulatory Flexibility Act and certify that it would not have a significant economic impact on a substantial number of small entities.

This document proposes to amend and reorganize the regulatory text of 49 CFR 571.114 so that it better correlates to modern theft protection technology and better reflects the agency's interpretation of the existing requirements. If made final, vehicle manufacturers or any other small businesses would not have to make any changes to their products as a result of this rule.

F. Paperwork Reduction Act

Under the Paperwork Reduction Act of 1995, a person is not required to respond to a collection of information by a Federal agency unless the collection displays a valid OMB control number. This proposal does not include any new information collection requirements.

G. National Technology Transfer and Advancement Act

Section 12(d) of the National Technology Transfer and Advancement Act of 1995 (NTTAA), Public Law 104–113, section 12(d) (15 U.S.C. 272) directs us to use voluntary consensus standards in its regulatory activities unless doing so would be inconsistent with applicable law or otherwise impractical. Voluntary consensus standards are technical standards (*e.g.*, materials specifications, test methods, sampling procedures, and business practices) that are developed or adopted by voluntary consensus standards bodies. The NTTAA directs us to provide Congress, through OMB, explanations when we decide not to use available and applicable voluntary consensus standards.

There are no available voluntary consensus standards that are equivalent to FMVSS No. 114.

H. Unfunded Mandates Reform Act

Section 202 of the Unfunded Mandates Reform Act of 1995 (UMRA) requires Federal agencies to prepare a written assessment of the costs, benefits and other effects of proposed or final rules that include a Federal mandate likely to result in the expenditure by State, local or tribal governments, in the aggregate, or by the private sector, of more than $100 million in any one year ($120.7 million as adjusted annually for inflation with base year of 1995).

The proposed requirements would not result in costs of $120.7 million or more to either State, local, or tribal governments, in the aggregate, or to the private sector.

I. Regulation Identifier Number (RIN)

The Department of Transportation assigns a regulation identifier number (RIN) to each regulatory action listed in the Unified Agenda of Federal Regulations. The Regulatory Information Service Center publishes the Unified Agenda in April and October of each year. You may use the RIN contained in the heading at the beginning of this document to find this action in the Unified Agenda.

J. Privacy Act

Please note that anyone is able to search the electronic form of all comments received into any of our dockets by the name of the individual submitting the comment (or signing the comment, if submitted on behalf of an association, business, labor union, etc.). You may review DOT's complete Privacy Act Statement in the **Federal Register** published on April 11, 2000 (Volume 65, Number 70; Pages 19477–78), or you may visit *http://dms.dot.gov.*

K. Plain Language

Executive Order 12866 requires each agency to write all rules in plain language. Application of the principles of plain language includes consideration of the following questions:

- Have we organized the material to suit the public's needs?
- Are the requirements in the rule clearly stated?
- Does the rule contain technical language or jargon that isn't clear?
- Would a different format (grouping and order of sections, use of headings, paragraphing) make the rule easier to understand?
- Would more (but shorter) sections be better?
- Could we improve clarity by adding tables, lists, or diagrams?
- What else could we do to make the rule easier to understand?

If you have any responses to these questions, please include them in your comments on this proposal.

L. National Environmental Policy Act

NHTSA has analyzed this proposal for the purposes of the National Environmental Policy Act. The agency has determined that implementation of this action would not have any

significant impact on the quality of the human environment.

VI. Regulatory Text

List of Subjects in 49 CFR Parts 571

Motor vehicle safety, Reporting and recordkeeping requirements, Tires.

In consideration of the foregoing, part 571 would be amended as follows:

PART 571—[AMENDED]

1. The authority citation for part 571 would continue to read as follows:

Authority: 49 U.S.C. 322, 2011, 30115, 30166 and 30177; delegation of authority at 49 CFR 1.50.

2. Section 571.114 would be revised to read as follows:

§ 571.114 Standard No. 114; Theft protection and rollaway prevention.

S1. *Scope.* This standard specifies vehicle performance requirements intended to reduce the incidence of crashes resulting from theft and accidental rollaway of motor vehicles.

S2. *Purpose.* The purpose of this standard is to decrease the likelihood that a vehicle is stolen, or accidentally set in motion.

S3. *Application.* This standard applies to all passenger cars, and to trucks and multipurpose passenger vehicles with a GVWR of 4,536 kilograms (10,000 pounds) or less. However, it does not apply to walk-in van-type vehicles.

S4. Definitions

Combination means a variation of the key that permits the starting system of a particular vehicle to be operated.

Key means a physical device or an electronic code which, when inserted into the starting system (by physical or electronic means), enables the vehicle operator to activate the engine or motor.

Open-body type vehicle means a vehicle having no occupant compartment doors or vehicle having readily detachable occupant compartment doors.

Starting system means the vehicle system used in conjunction with the key to activate the engine or motor.

Vehicle type, as used in S5.1.2, refers to passenger car, truck, or multipurpose passenger vehicle, as those terms are defined in 49 CFR 571.3.

S5. *Requirements.* Each vehicle subject to this standard must meet the requirements of S5.1 and S5.2. Open-body type vehicles are not required to comply with S5.1.3.

S5.1 Theft Protection

S5.1.1 Each vehicle must have a starting system which, whenever the key is removed from the starting system prevents:

(a) The normal activation of the vehicle's engine or motor; and

(b) Either steering, or forward self-mobility, of the vehicle, or both.

S5.1.2 For each vehicle type manufactured by a manufacturer, the manufacturer must provide at least 1,000 unique key combinations, or a number equal to the total number of the vehicles of that type manufactured by the manufacturer, whichever is less. The same combinations may be used for more than one vehicle type.

S5.1.3. Except as specified below, an audible warning to the vehicle operator must be activated whenever the key is in the starting system and the door located closest to the driver's designated seating position is opened. An audible warning to the vehicle operator need not activate:

(a) After the key has been inserted into the starting system, and before the driver takes further action; or

(b) If the key is in the starting system in a manner or position that allows the engine or motor to be started or to continue operating; or

(c) For mechanical keys and starting systems, after the key has been withdrawn to a position from which it may not be turned.

S5.1.4. If a vehicle is equipped with a transmission with a ''park'' position, the means for deactivating the vehicle's engine or motor must not activate any device installed pursuant to S5.1.1(b), unless the transmission is locked in the ''park'' position.

S5.2. Rollaway Prevention in Vehicles Equipped With Transmissions With a ''Park'' Position

S5.2.1 Except as specified in S5.2.3, the starting system required by S5.1 must prevent key removal when tested according to the procedures in S6, unless the transmission or gear selection control is locked in ''park'' or becomes locked in ''park'' as a direct result of key removal.

S5.2.2 Except as specified in S5.2.4, the vehicle must be designed such that the transmission or gear selection control cannot move from the ''park'' position, unless the key is in the starting system.

S5.2.3 Key Removal Override Option

At the option of the manufacturer, the key may be removed from the starting system without the transmission or gear selection control in the ''park'' position under one of the following conditions:

(a) In the event of electrical failure, including battery discharge, the key may be automatically removed from the starting system without the transmission or gear selection control locked in the ''park'' position; or

(b) Provided that steering or self-mobility is prevented, the vehicle may have a device by which the user can remove the key from the starting system without the transmission or gear selection control locked in ''park.'' This device must require:

(i) The use of a tool, and

(ii) Simultaneous activation of the device and removal of the key; or

(c) Provided that steering or self-mobility is prevented, the vehicle may have a device by which the user can remove the key from the starting system without the transmission or gear selection control locked in ''park.'' This device must be covered by an opaque surface which, when installed:

(i) Prevents sight of and use of the device, and

(ii) Can be removed only by using a screwdriver or other tool.

S5.2.4 Gear Selection Control Override Option

The vehicle may have a device by which the user can move the gear selection control from ''park'' after the key has been removed from the starting system. This device must be operable by one of the three options below:

(a) By use of the key; or

(b) By a means other than the key, provided steering or forward self-mobility is prevented when the key is removed from the starting system. Such a means must require:

(i) The use of a tool, and

(ii) Simultaneous activation of this means and movement of the gear selection control from ''park;'' or

(c) By a means other than the key, provided steering or forward self-mobility is prevented when the key is removed from the starting system. This device must be covered by an opaque surface which, when installed:

(i) Prevents sight of and use of the device, and

(ii) Can be removed only by using a screwdriver or other tool.

S5.2.5 When tested in accordance with S6.2.2, each vehicle must not move more than 150 mm on a 10 percent grade when the gear selection control is locked in ''park.''

S6. Compliance Test Procedure for Vehicles With Transmissions With a ''Park'' Position

S6.1 Test Conditions

S6.1.1 The vehicle shall be tested at curb weight plus 91 kg (including the driver).

S6.1.2 Except where specified otherwise, the test surface shall be level.

S6.2 Test Procedure

S6.2.1

(a) Activate the starting system using the key.

(b) Move the gear selection control to any gear selection position or any other position where it will remain without assistance, including a position between any detent positions, except for the ''park'' position.

(c) Attempt to remove the key in each gear selection position.

S6.2.2

(a) Drive the vehicle forward up a 10 percent grade and stop it with the service brakes.

(b) Apply the parking brake (if present).

(c) Move the gear selection control to ''park.''

(d) Note the vehicle position.

(e) Release the parking brake. Release the service brakes.

(f) Remove the key.

(g) Verify that the gear selection control or transmission is locked in ''park.''

(h) Verify that the vehicle, at rest, has moved no more than 150 mm from the position noted prior to release of the brakes.

S6.2.3

(a) Drive the vehicle forward down a 10 percent grade and stop it with the service brakes.

(b) Apply the parking brake (if present).

(c) Move the gear selection control to ''park.''

(d) Note the vehicle position.

(e) Release the parking brake. Release the service brakes.

(f) Remove the key.

(g) Verify that the gear selection control or transmission is locked in ''park.''

(h) Verify that the vehicle, at rest, has moved no more than 150 mm from the position noted prior to release of the brakes.

Issued: August 5, 2005.

Stephen R. Kratzke,

Associate Administrator for Rulemaking.

[FR Doc. 05–16226 Filed 8–16–05; 8:45 am]

BILLING CODE 4910–59–P

Notices

Federal Register

Vol. 70, No. 158

Wednesday, August 17, 2005

This section of the FEDERAL REGISTER contains documents other than rules or proposed rules that are applicable to the public. Notices of hearings and investigations, committee meetings, agency decisions and rulings, delegations of authority, filing of petitions and applications and agency statements of organization and functions are examples of documents appearing in this section.

DEPARTMENT OF AGRICULTURE

Forest Service

Black Hills National Forest, Northern Hills Ranger District, South Dakota and Bearlodge Ranger District, Wyoming, North Zone Range 05 Proposal and Analysis

AGENCY: Forest Service, USDA.

ACTION: Notice of intent to prepare an environmental impact statement.

SUMMARY: Revise Rangeland Allotment Management Plans (RAMP) for eight allotments comprising about 79,634 acres within two Ranger Districts of the Black Hills National Forest and analyze continuation of grazing within the constraints of the Revised Black Hills National Forest Land and Resource Management Plan, as amended (BHNF LRMP).

DATES: Comments concerning the scope of the analysis must be received within 30 days after publication in the **Federal Register**. The draft environmental impact statement is expected in December, 2005 and the final environmental impact statement is expected February, 2005.

ADDRESSES: Send written comments to Alice Allen, Hell Canyon Ranger District, 330 Mt. Rushmore Rd., Custer, South Dakota 57730. Comment may also be submitted by e-mail to: *comments-rocky-mountain-black-hills-bearlodge@fs.fed.us* with ''North Zone Range 05'' as subject.

FOR FURTHER INFORMATION CONTACT: Alice Allen, Project Coordinator, Black Hills National Forest, Hell Canyon Ranger District, at 330 Mt. Rushmore Rd., phone (605) 673–4853.

SUPPLEMENTARY INFORMATION:

Purpose and Need for Action: The purpose of the project is to authorize livestock grazing in an environmentally acceptable manner. The EIS will determine current conditions, analyze environmental consequences of grazing management actions on those conditions, and assist the decision maker in selecting management/monitoring strategies consistent with meeting desired conditions in the BHNF LRMP, including Goals 1, 2 and 3. The need for the action is to revise allotment management plans, reverse any existing undesirable conditions, and ensure that authorized uses and associated management activities move them towards desired BHNF LRMP conditions. There is also a need to respond to requests for grazing permits on lands not currently being grazed.

Proposed Action: The Northern Hills and Bearlodge Ranger Districts propose to implement best management practices and activities with adaptive management and monitoring strategies to allow livestock grazing consistent with Forest Plan desired conditions, standards and guidelines.

Possible Alternatives: The Current Management Alternative would not change current permitted livestock grazing. The No Grazing Alternative would eliminate any livestock grazing on the project area.

Responsible Official

The Responsible Official for the allotments on the Bearlodge Ranger District is Steve Kozel, District Ranger, Black Hills National Forest, Bearlodge Ranger District, 121 S. 21st Street, Sundance, Wyoming 82729. THe Responsible Official for the allotments on the Northern Hills Ranger District is Pamela Brown, District Ranger, Black Hills National Forest, Northern Hills Ranger District, 2014 N. Main St., Spearfish, South Dakota 57783.

Nature of Decision To Be Made

The decision to be made is whether to continue to permit livestock grazing on all, part, or none of these allotments and, if so, under what terms and conditions to ensure that desired condition objectives are met, or that movement occurs toward those objectives. Whether or not to allow livestock grazing on three recently acquired parcels and one vacant grazing unit will also be decided, and if so, under what conditions.

Scoping Process

Comments and input regarding the proposal were requested from the public, other groups and agencies via direct mailing on March 21, 2005. Comments were due by April 20, 2005. Additional comments will be solicited during August and September 2005 via public notices and an additional direct mailing. Also, response to the draft EIS will be sought from the interested public in December 2005 and January 2006. Preliminary issues include grassland and riparian health, water quality, and effects on sensitive wildlife and plant species.

Comment Requested

This notice of intent initiates the scoping proces which guides the development of the environmental impact statement. It is the District's desire to involve interested parties in identifying the issues related to grazing management. Comments will help the planning team identify key issues and opportunities used to develop adaptive management tools, monitoring strategies, and alternatives. Persons who submitted comments previously need not resubmit those same comments in response to this request. Comments submitted previously will continue to be considered.

Early Notice of Importance of Public Participation in Subsequent Environmental Review: A draft environmental impact statement will be prepared for comment. The comment period on the draft environmental impact statement will be 45 days from the date the Environmental Protection Agency publishes the notice of availability in the **Federal Register**.

The Forest Service believes, at this early stage, it is important to give reviewers notice of several court rulings related to public participation in the environmental review process. First, reviewers of draft environmental impacts statements must structure their participation in the environmental review of the proposal so that it is meaningful and alerts an agency to the reviewer's position and contentions. *Vermont Yankee Nuclear Power Corp.* v. *NRDC,* 435 U.S. 519, 553 (1978). Also, environmental objectives that could be raised at the draft environmental impact statement stage but that are not raised until after completion of the final environmental impact statement may be waived or dismissed by the courts, *City of Angoon* v. *Hodel,* 803 F.2d 1016, 1022 (9th Cir. 1986) and *Wisconsin Heritages, Inc.* v. *Harris,* 490 F. Supp.

1334, 1338 (E.D. Wis. 1980). Because of these court rulings, it is very important that those interested in this proposed action participate by the close of the 45-day comment period so that substantive comments and objections are made available to the Forest Service at a time when it can meaningfully consider them and respond to them in the final environmental impact statement.

To assist the Forest Service in identifying and considering issues and concerns on the proposed action, comments on the draft environmental impacts statement should be as specific as possible. It is also helpful if comments refer to specific pages or chapters of the draft statement. Comments may also address the adequacy of the draft environmental impact statement or the merits of the alternatives formulated and discussed in the statement. Reviewers may wish to refer to the Council on Environmental Quality Regulations for implementing the procedural provisions of the National Environmental Policy Act at 40 CFR 1503.3 in addressing these points.

Comments received, including the names and addresses of those who comment, will be considered part of the public record on this proposal and will be available for public inspection.

(Authority: 40 CFR 1501.7 and 1508.22; Forest Service Handbook 1909.15, Section 21)

Dated: August 10, 2005.

Craig Bobzien,

Forest Supervisor, Black Hills National Forest.

[FR Doc. 05–16259 Filed 8–16–05; 8:45 am]

BILLING CODE 3410–11–M

DEPARTMENT OF AGRICULTURE

Forest Service

Alpine County, CA, Resource Advisory Committee (RAC)

AGENCY: Forest Service, USDA.

ACTION: Notice of meeting.

SUMMARY: Pursuant to the authorities in the Federal Advisory Committees Act (Pub. L. 92–463) and under the Secure Rural Schools and Community Self-Determination Act of 2000 (Pub. L. 106–393) the Alpine County Resource Advisory Committee (RAC) will meet on Tuesday, September 06, 2005 at 18:00 at the Diamond Valley School for business meetings. The purpose of the meeting is to discuss issues relating to implementing the Secure Rural Schools and Community Self-Determination Act of 2000 (Payment to States) and expenditure of Title II funds. The meetings are open to the public.

DATES: Tuesday, September 06, 2005, at 18:00 hours.

ADDRESSES: The meeting will be held at the Diamond Valley School, 35 Hawkside Drive, Markleeville, California 96120. Send written commtns to Franklin Pemberton, Alpine County RAC coordinator, c/o USDA Forest Service, Humboldt-Toiyabe N.F., Carson Ranger District 1536 So. Carson Street, Carson City, NV 89701.

FOR FURTHER INFORMATION CONTACT: Alpine Co. RAC Coordinator, Franklin Pemberton at (775) 884–8150; or Gary Schiff, Carson District Ranger and Designated Federal Officer, at (775) 884–8100, or electronically to *fpemberton@fs.fed.us*.

SUPPLEMENTARY INFORMATION: The meeting is open to the public. Council discussion is limited to Forest Service staff and Council members. However, persons who wish to bring urban and community forestry matters to the attention of the council may file written statements with the Council staff before and after the meeting.

Dated: August 10, 2005.

Gary Schiff,

Designated Federal Official.

Agenda

RAC Meeting

Diamond Valley School

9/06/05 at 6 p.m.

Old Business

I. Approve minutes from last meeting.

New Business

I. Discuss corrections to Project Status/Monitoring.

II. Review RAC Financial Information/Discuss Fund Distribution.

III. Schedule next meeting.

Adjourn

[FR Doc. 05–16261 Filed 8–16–05; 8:45 am]

BILLING CODE 3410–11–P

DEPARTMENT OF AGRICULTURE

Grain Inspection, Packers and Stockyards Administration

[05–MN–A]

Cancellation of Minnesota's Designation and the Opportunity for Designation in the Minnesota Area

AGENCY: Grain Inspection, Packers and Stockyards Administration, USDA.

ACTION: Notice.

SUMMARY: The United States Grain Standards Act, as amended (Act), provides that official agency designations will be cancelled upon request by the official agency with a 90 day written notice to Grain Inspection, Packers and Stockyards Administration (GIPSA). The Minnesota Department of Agriculture (Minnesota), designated to provide official inspection and weighing services until September 30, 2006, has requested GIPSA to cancel the designation, covering official domestic services, effective November 9, 2005. Minnesota will continue to provide export services under a delegation agreement with GIPSA. Accordingly, GIPSA is announcing that Minnesota's designation will be canceled, on or about November 9, 2005. GIPSA is asking for applicants for domestic service in the Minnesota area.

DATES: Applications and comments must be postmarked or electronically dated on or before September 16, 2005.

ADDRESSES: We invite you to submit applications and comments on this notice. You may submit applications and comments by any of the following methods:

- Hand Delivery or Courier: Deliver to Janet M. Hart, Chief, Review Branch, Compliance Division, GIPSA, USDA, Room 1647–S, 1400 Independence Avenue, SW., Washington, DC 20250.
- Fax: Send by facsimile transmission to (202) 690–2755, attention: Janet M. Hart.
- E-mail: Send via electronic mail to *Janet.M.Hart@usda.gov.*
- Mail: Send hardcopy to Janet M. Hart, Chief, Review Branch, Compliance Division, GIPSA, USDA, STOP 3604, 1400 Independence Avenue, SW., Washington, DC 20250–3604.

Read Applications and Comments: All applications and comments will be available for public inspection at the office above during regular business hours (7 CFR 1.27(b)).

FOR FURTHER INFORMATION CONTACT: Janet M. Hart at 202–720–8525, e-mail *Janet.M.Hart@usda.gov.*

SUPPLEMENTARY INFORMATION: This action has been reviewed and determined not to be a rule or regulation as defined in Executive Order 12866 and Departmental Regulation 1512–1; therefore, the Executive Order and Departmental Regulation do not apply to this action.

Section 7(f)(1) of the Act authorizes GIPSA's Administrator to designate a qualified applicant to provide official services in a specified area after determining that the applicant is better able than any other applicant to provide such official services. GIPSA designated Minnesota, headquarters in Saint Paul, Minnesota, to provide official

inspection services under the Act on April 1, 2005.

Section 7(g)(1) of the Act provides that designations of official agencies will end not later than triennially and may be renewed according to the criteria and procedures prescribed in section 7(f) of the Act. The designation of Minnesota ends on September 30, 2006, according to the Act. However, Minnesota asked GIPSA for a voluntary cancellation of their designation effective November 9, 2005. Accordingly, Minnesota's designation will cease effective November 8, 2005, and GIPSA is asking for applicants to provide official service.

Pursuant to section 7(f)(2) of the Act, the following geographic area, the entire State of Minnesota, except those export port locations within the State, is assigned to this official agency. Interested persons are hereby given the opportunity to apply for designation to provide official services in the geographic areas specified above under provisions of section 7(f) of the Act and section 800.196(d) of the regulations issued thereunder. Persons wishing to apply for designation should contact the Compliance Division at the address listed above for forms and information, or obtain applications at the GIPSA Web site, *http://www.usda.gov/gipsa/oversight/parovreg.htm.*

Authority: Pub. L. 94–582, 90 Stat. 2867, as amended (7 U.S.C. 71 *et seq.*).

David R. Shipman,

Acting Administrator, Grain Inspection, Packers and Stockyards Administration.

[FR Doc. 05–16247 Filed 8–16–05; 8:45 am]

BILLING CODE 3410–EN–P

DEPARTMENT OF COMMERCE

Census Bureau

2006 Census Test Coverage Followup Operation

ACTION: Proposed collection; comment request.

SUMMARY: The Department of Commerce, as part of its continuing effort to reduce paperwork and respondent burden, invites the general public and other Federal agencies to take this opportunity to comment on proposed and/or continuing information collections, as required by the Paperwork Reduction Act of 1995, Public Law 104–13 (44 U.S.C. 3506(c)(2)(A)).

DATES: Written comments must be submitted on or before October 17, 2005.

ADDRESSES: Direct all written comments to Diana Hynek, Departmental Paperwork Clearance Officer, Department of Commerce, Room 6625, 14th and Constitution Avenue, NW., Washington, DC 20230 (or via the Internet at *DHynek@doc.gov*).

FOR FURTHER INFORMATION CONTACT: Requests for additional information or copies of the information collection instrument(s) and instructions should be directed to Frank Vitrano, U.S. Census Bureau, Building 2, Room 2012, Washington, DC 20233–9200, 301–763–3961.

SUPPLEMENTARY INFORMATION:

I. Abstract

Improving coverage, or how well the Census Bureau counts people and housing units in the census, is one of the major goals for the 2010 Census. The U.S. Census Bureau has designed a series of tests intended to examine new methods for improving overall coverage of the population and housing. Favorable results will be implemented in the 2010 Decennial Census Program. In preparation for the 2010 Census, the Census Bureau has conducted two previous operations designed to evaluate the effectiveness of new procedures for improving coverage and reducing duplication. These coverage measurement operations are the 2004 Census Test Coverage Research Followup (OMB Approval Number 0607–0910) and the 2005 National Census Test Coverage Followup (OMB Approval Number 0607–0916.)

The 2006 Census Test is part of the cycle of tests leading up to the 2010 Census. Like other tests, the primary goals of this test are designed to evaluate new methods and systems intended to improve accuracy, provide more timely and relevant data, reduce risks, and/or contain costs. In support of these goals, the 2006 Coverage Followup (CFU) operation is designed to study a method to improve coverage that collects additional information from households that might have coverage problems. This includes households where persons might have been counted more than once (*e.g.*, students who are counted at their parents' home but also counted where they reside while they are attending school) and persons who might not have been included in the household count (*e.g.*, newborn babies or roommates). This operation also will contact large households (those with more than six persons listed on their mail-back questionnaires) in order to ensure that everyone is included in the census. Another category of households that we will attempt to contact are those that contain persons identified through the StARS database (an administrative records database built from six national level data files) but who were not included on the appropriate census questionnaire. Finally, this operation will include households where the count of persons does not equal the number of persons for which census data were provided during enumeration

II. Method of Collection

The 2006 Census Test CFU operation will be conducted in selected locations in Travis County, Texas and the Cheyenne River Reservation and Off Reservation Trust Land, South Dakota in two phases: telephone and personal visit.

The telephone operation will be conducted April 21, 2006, through August 31, 2006, with an expected workload of approximately 25,000 housing units in Travis County and approximately 400 housing units in the Cheyenne River Reservation. During this operation, the CFU interviewers will attempt to contact, via telephone, a portion of the households that fall within the CFU sample that provided a telephone number on the questionnaire. The followup interviews will be conducted by U.S. Census Bureau staff at two of the U.S. Census Bureau's telephone call centers, located in Jeffersonville, IN and Tucson, AZ. These interviews will be conducted by computer-assisted telephone interviewing (CATI). The CATI instrument will be in English, or in Spanish for those respondents who wish to report their information in the Spanish language. We expect an approximately 60% response rate for the telephone operation. Nonrespondents during this operation will be sent for personal visit followup.

The personal visit operation will be conducted July 21, 2006, through August 31, 2006, with an expected workload of approximately 28,000 housing units in Travis County and approximately 400 housing units in the Cheyenne River Reservation, including those nonrespondents from the telephone operation. During this operation, enumerators will attempt to enumerate respondents using a paper questionnaire. We expect an approximately 90% response rate for the personal visit operation.

The purpose of the CFU telephone and personal visit contact is to identify those persons who may have been counted in more than one household or erroneously excluded from any household. The items included in the 2006 CFU questionnaire are probes that are intended to indicate whether

respondents understood and properly applied the residence rules instructions on the 2006 Census Test questionnaire.

III. Data

OMB Number: Not available.
Form Number:
Type of Review: Regular.
Affected Public: Individuals or households.
Estimated Number of Respondents: Approximately 53,800 housing units.
Estimated Time Per Response: The personal visit operation and the telephone operation will each require approximately 10 minutes for response.
Estimated Total Annual Burden Hours: Approximately 8,967 hours for the total CFU workload.
Estimated Total Annual Cost: There is no cost to respondents except for their time to respond.
Respondent's Obligation: Mandatory.
Legal Authority: Title 13 of the United States Code, Sections 141 and 193.

IV. Request for Comments

Comments are invited on: (a) Whether the proposed collection of information is necessary for the proper performance of the functions of the agency, including whether the information shall have practical utility; (b) the accuracy of the agency's estimate of the burden (including hours and cost) of the proposed collection of information; (c) ways to enhance the quality, utility, and clarity of the information to be collected; and (d) ways to minimize the burden of the collection of information on respondents, including through the use of automated collection techniques or other forms of information technology.

Comments submitted in response to this notice will be summarized and/or included in the request for OMB approval of this information collection; they also will become a matter of public record.

Dated: August 11, 2005.

Madeleine Clayton,

Management Analyst, Office of the Chief Information Officer.

[FR Doc. 05–16250 Filed 8–16–05; 8:45 am]

BILLING CODE 3510–07–P

DEPARTMENT OF COMMERCE

International Trade Administration

Applications for Duty–Free Entry of Scientific Instruments

Pursuant to Section 6(c) of the Educational, Scientific and Cultural Materials Importation Act of 1966 (Pub. L. 89–651; 80 Stat. 897; 15 CFR part 301), we invite comments on the question of whether instruments of equivalent scientific value, for the purposes for which the instruments shown below are intended to be used, are being manufactured in the United States.

Comments must comply with 15 CFR 301.5(a)(3) and (4) of the regulations and be filed within 20 days with the Statutory Import Programs Staff, U.S. Department of Commerce, Washington, DC 20230. Applications may be examined between 8:30 a.m. and 5 p.m. in Suite 4100W, U.S. Department of Commerce, Franklin Court Building, 1099 14th Street, NW., Washington, DC.

Docket Number: 05–032. Applicant: State University of New York, Stony Brook. Instrument: Mass Spectrometer, Model JEM–2200FS. Manufacturer: JEOL Ltd., Japan. Intended Use: The instrument is intended to be used to directly observe atoms in crystalline materials, to perform quantitative imaging and electron diffraction experiments, to obtain detailed structural information from biological samples and to characterize and understand the crystallographic atomic and electronic structure of various technologically important materials.*Application accepted by Commissioner of Customs:* July 20, 2005.

Docket Number: 05–034. Applicant: The University of Southern Mississippi, 118 College Drive, ι5104, Hattiesburg, MS 39406-0001. Instrument: Electron Microscope, Model JEM–2100. Manufacturer: JEOL Ltd., Japan. Intended Use: The instrument is intended to be used for analyzing polymers, composites, and biological materials. Objectives of studies will include practices which will prove successful in demonstrating the importance and usefulness of electron microscopy in polymer and biological research and education of students. It will also be used widely in courses. Application accepted by Commissioner of Customs: July 27, 2005.

Docket Number: 05–035. Applicant: Princeton University, P.O. BOX 33, 2 New South Building, Princeton, NJ 08544. Instrument: Geiger Mode Ionizing Counters. Manufacturer: pol.hi.tech, Italy. Intended Use: The instrument is intended to be used for conducting the ''BaBar'' experiment at the Stanford Linear Accelerator Center to detect penetrating ionizing particles emanating from decaying B mesons, to study all the systematics of B meson decay processes. The detectors will be installed at the Accelerator Center and will become an integral part of the experiment (which involves the participation of over 500 scientists, worldwide) until its conclusion. The main objective is to study the puzzling phenomenon of CP violation, the only known difference in behavior of matter and antimatter. Application accepted by Commissioner of Customs: August 2, 2005.

Docket Number: 05–036. Applicant: Areas Global TB Vaccine Foundation. Instrument: CyFlow ML Flow Cytometer, Model 16 parameter - 4 light sources. Manufacturer: Partec, GmbH, Germany. Intended Use: The instrument is intended to be used to investigate subsets of human and animal cells for special characteristics as cytokine production using human PMBC samples from clinical vaccination trials and cells from animal studies.

Research will focus on:
1. Intracellular flow cytometry analysis of special subsets of cells to antigen–stimulation specific cytokine production
2. Develop clinical endpoint assay to assess effects of new vaccines.
3. Establish SOPs, validate the assay and train personnel.
4. Develop new flow–based assays for the assessment of dendritic cells.

Application accepted by Commissioner of Customs: August 3, 2005.

Gerald A. Zerdy,

Program Manager Statutory Import Programs Staff.

[FR Doc. E5–4492 Filed 8–16–05; 8:45 am]

BILLING CODE 3510–DS–S

DEPARTMENT OF COMMERCE

International Trade Administration

Environmental Technologies Trade Advisory Committee (ETTAC)

AGENCY: International Trade Administration, U.S. Department of Commerce.

ACTION: Notice of open meeting.

Date: September 16, 2005.
Time: 8:30 a.m. to 4 p.m.
Place: Department of Commerce, 14th and Constitution NW., Washington DC 20230, Room 4830.

Summary: The Environmental Technologies Trade Advisory Committee (ETTAC) will hold a plenary meeting on September 16, 2005, at the U.S. Department of Commerce, 14th Street and Constitution Avenue, NW., Washington, DC 20230, in Room 4830. The ETTAC will discuss global climate change mitigation initiatives, the European Union's electronic and other waste initiatives, updated negotiations

in the World Trade Organization's environmental goods and services trade liberalization, and the Export-Import Bank's environmental exports program. The afternoon session will include a discussion of the U.S. EPA's Resource Conservation Challenge, the Environmental Technologies Verification (ETV) Program and an overview of the U.S. International Trade Commission's environmental services sector market analysis. The meeting is open to the public and time will be permitted for public comment.

Written comments concerning ETTAC affairs are welcome anytime before or after the meeting. Minutes will be available within 30 days of this meeting.

The ETTAC is mandated by Public Law 103–392. It was created to advise the U.S. government on environmental trade policies and programs, and to help it to focus its resources on increasing the exports of the U.S. environmental industry. ETTAC operates as an advisory committee to the Secretary of Commerce and the Trade Promotion Coordinating Committee (TPCC). ETTAC was originally chartered in May of 1994. It was most recently rechartered until May 30, 2006.

For further information phone Joseph Ayoub, Office of Energy and Environmental Technologies Industries (OEEI), International Trade Administration, U.S. Department of Commerce at (202) 482–5225. This meeting is physically accessible to people with disabilities. Requests for sign language interpretation or other auxiliary aids should be directed to OEEI at (202) 482–5225.

Dated: August 10, 2005.

Carlos F. Montoulieu,

Director, Office of Energy and Environmental Industries.

[FR Doc. E5–4487 Filed 8–16–05; 8:45 am]

BILLING CODE 3510–DR–P

DEPARTMENT OF COMMERCE

International Trade Administration

North American Free-Trade Agreement, Article 1904 NAFTA Panel Reviews; Completion of Panel Review

AGENCY: NAFTA Secretariat, United States Section, International Trade Administration, Department of Commerce.

ACTION: Notice of Completion of Panel Review of the final injury determination made by the U.S. International Trade Commission, in the matter of Certain Softwood Lumber Products From Canada, Secretariat File No. USA–CDA–2002–1904–07.

SUMMARY: Pursuant to the Order of the Extraordinary Challenge Committee issued August 10, 2005, affirming the final injury determination described above, this review was completed on August 11, 2005.

FOR FURTHER INFORMATION CONTACT: Caratina L. Alston, United States Secretary, NAFTA Secretariat, Suite 2061, 14th and Constitution Avenue, Washington, DC 20230, (202) 482–5438.

SUPPLEMENTARY INFORMATION: On August 10, 2005, the Extraordinary Challenge Committee issued a decision which affirmed the final remand opinion of the Binational Panel concerning Certain Softwood Lumber Products From Canada—Injury Determination. Based on the decision of the Extraordinary Challenge Committee, the Binational Panel members are discharged from their duties effective August 11, 2005.

Dated: August 11, 2005.

Caratina L. Alston,

United States Secretary, NAFTA Secretariat.

[FR Doc. E5–4493 Filed 8–16–05; 8:45 am]

BILLING CODE 3510–GT–P

DEPARTMENT OF COMMERCE

National Oceanic and Atmospheric Administration

[I.D. 081105B]

New England Fishery Management Council; Public Meetings

AGENCY: National Marine Fisheries Service (NMFS), National Oceanic and Atmospheric Administration (NOAA), Commerce.

ACTION: Notice; committee meetings.

SUMMARY: The New England Fishery Management Council's (Council) Groundfish Advisory Panel and Oversight Committee will hold meetings to consider actions affecting New England fisheries in the exclusive economic zone (EEZ).

DATES: The meetings will be held in August 2005. For specific dates and times, see **SUPPLEMENTARY INFORMATION**.

ADDRESSES: The meetings will be held in Peabody MA. For specific locations, see **SUPPLEMENTARY INFORMATION**.

Council address: New England Fishery Management Council, 50 Water Street, Mill #2, Newburyport, MA 01950.

FOR FURTHER INFORMATION CONTACT: Paul J. Howard, Director, New England Fishery Management Council; telephone: (978)465–0492.

SUPPLEMENTARY INFORMATION: The committee's schedule and agenda for the Council meetings are as follows:

Locations, Schedules, and Agendas

1. Monday, August 29, 2005 beginning at 9:30 a.m.; Holiday Inn, One Newbury Street, Peabody, MA 01960

The Groundfish Advisory Panel will meet to continue develop recommendations for Framework Adjustment 42 (FW 42) to the Northeast Multispecies Fishery Management Plan (FMP). The Panel will receive a preliminary report on groundfish assessments and will discuss what changes to management measures may be necessary as a result of that report. These changes could include modifications to the Amendment 13 default measures, Special Access Programs(SAPs), incidental catch Total Allowable Catch (TACs) that apply to the use of Category B days-at-sea (DAS), or other measures. Draft measures text for the framework will be reviewed and recommendations developed for adjustments as necessary. The Panel may also discuss options for a formal rebuilding plan for Georges Bank yellowtail flounder and may recommend measures necessary to rebuild that stock. The Panel will discuss extending and/or modifying, as necessary, the Category B (regular) DAS Pilot Program. The Advisory Panel report will be provided to the Groundfish Committee to assist its deliberations. Other business may also be discussed.

2. Tuesday, August 30, 2005 beginning at 9:30 a.m.; Holiday Inn, One Newbury Street, Peabody, MA 01960

The Groundfish Oversight Committee will meet to continue development of FW 42 to the Northeast Multispecies FMP. They will receive a preliminary report on groundfish assessments and will discuss what changes to management measures may be necessary as a result of that report. These changes could include modifications to the Amendment 13 default measures, SAPs, incidental catch TACs that apply to the use of Category B DAS, or other measures. The Committee will also develop options for a formal rebuilding plan for Georges Bank yellowtail flounder and will identify measures necessary to rebuild that stock. They will consider extending and/or modifying, as necessary, the Category B (regular) DAS Pilot Program. Draft measures text for the framework will be reviewed and adjusted as necessary. The Committee may also discuss a standardized bycatch reporting methodology. An Advisory Panel report will be provided to assist the

Committee's deliberations. Other business may also be discussed. Committee recommendations will be forwarded to the Council at a future date.

Although non-emergency issues not contained in this agenda may come before this group for discussion, those issues may not be the subject of formal action during this meeting. Action will be restricted to those issues specifically identified in this notice and any issues arising after publication of this notice that require emergency action under section 305(c) of the Magnuson-Stevens Fishery Conservation and Management Act, provided the public has been notified of the Council's intent to take final action to address the emergency.

Special Accommodations

These meetings are physically accessible to people with disabilities. Requests for sign language interpretation or other auxiliary aids should be directed to Paul J. Howard (see **ADDRESSES**), at least 5 working days prior to the meeting date.

Dated: August 12, 2005.

Anne Lange,

Acting Director, Office of Sustainable Fisheries, National Marine Fisheries Service.

[FR Doc. 05–16320 Filed 8–16–05; 8:45 am]

BILLING CODE 3510–22–S

DEPARTMENT OF COMMERCE

Patent and Trademark Office

Submission for OMB Review; Comment Request

The United States Patent and Trademark Office (USPTO) has submitted to the Office of Management and Budget (OMB) for clearance the following proposal for collection of information under the provisions of the Paperwork Reduction Act (44 U.S.C. Chapter 35).

Agency: United States Patent and Trademark Office (USPTO).

Title: Patent Examiner Employment Application—Job Application Rating System (JARS).

Form Number(s): PTO–2041.

Agency Approval Number: 0651–0042.

Type of Request: Extension of a currently approved collection.

Burden: 3,500 hours annually.

Number of Respondents: 7,000 responses per year.

Avg. Hours per Response: 30 minutes. The USPTO estimates that it will take the public approximately 30 minutes (0.50) to gather and prepare the necessary information, and submit the electronic employment application.

Needs and Uses: The Patent Examiner Employment Application—Job Application Rating System (JARS) is used by the public to apply for entry-level patent examiner positions in a user-friendly process. The USPTO uses the electronic transmission of this information to review and rate applicants on-line almost instantaneously. It is also used by the USPTO to expedite the hiring process by eliminating the time used in the mail distribution process, thereby streamlining labor and reducing costs.

Affected Public: Individuals or households; farms; Federal Government, and state, local, or tribal governments.

Frequency: On occasion.

Respondent's Obligation: Voluntary.

OMB Desk Officer: David Rostker, (202) 395–3897.

Copies of the above information collection proposal can be obtained by any of the following methods:

- E-mail: *Susan.Brown@uspto.gov*. Include ''0651–0042 copy request'' in the subject line of the message.
- Fax: (571) 273–0112, marked to the attention of Susan Brown.
- Mail: Susan K. Brown, Records Officer, Office of the Chief Information Officer, Office of Data Architecture and Services, Data Administration Division, U.S. Patent and Trademark Office, P.O. Box 1450, Alexandria, VA 22313–1450.

Written comments and recommendations for the proposed information collection should be sent on or before September 16, 2005 to David Rostker, OMB Desk Officer, Room 10202, New Executive Office Building, Washington, DC 20503.

Dated: August 9, 2005.

Susan K. Brown,

Records Officer, USPTO, Office of Data Management, Data Administration Division.

[FR Doc. 05–16258 Filed 8–16–05; 8:45 am]

BILLING CODE 3510–16–P

DEPARTMENT OF COMMERCE

Technology Administration

Technology Administration Performance Review Board Membership

The Technology Administration Performance Review Board (TA PRB) reviews performance appraisals, agreements, and recommended actions pertaining to employees in the Senator Executive Service and reviews performance-related pay increases for ST–3104 employees. The Board makes recommendations to the appropriate appointing authority concerning such matters so as to ensure the fair and equitable treatment of these individuals.

This notice lists the membership of the TA PRB and supersedes the list published in **Federal Register** Vol. 69, No. 161, pages 51638–51639, on August 20, 2004.

Daniel W. Caprio, Jr. (NC), Deputy Assistant Secretary for Technology Policy, Office of Technology Policy, Technology Administration, Washington, DC 20230, Appointment Expires 12/31/06 (General).

Belinda L. Collins (C), Deputy Director for Technology Services, National Institute of Standards and Technology, Gaithersburg, MD 20899, Appointment Expires: 12/31/05 (Limited).

Alan Cookson (C) (Alternate), Deputy Director, Electronics and Electrical Engineering Laboratory, National Institute of Standards and Technology, Gaithersburg, MD 20899, Appointment Expires: 12/31/07 (Limited).

Paul Doremus (C), Director of Strategic Planning, Program Planning and Integration, National Oceanic and Atmospheric Administration, Silver Spring, MD 20910, Appointment Expires: 12/31/07 (Limited).

Cita Furlani (C), Chief Information Officer, National Institute of Standards & Technology; Gaithersburg, MD 20899, Appointment Expires: 12/31/07 (Limited).

Patrick Gallagher (C) (Alternate), Director, NIST Center for Neutron Research, Materials Science and Engineering Laboratory, National Institute of Standards and Technology, Gaithersburg, MD 20899, Appointment Expires: 12/31/07 (Limited).

Howard Harary (C), Deputy Director, Manufacturing Engineering Laboratory, National Institute of Standards and Technology, Gaithersburg, MD 20899, Appointment Expires: 12/31/07 (Limited).

Daniel Hurley (C), Director of Communication and Information, Infrastructure Assurance Program, National Telecommunications and Information Administration, Washington, DC 20230, Appointment Expires: 12/31/05 (General).

Deidre Jones (C), Director of Systems Engineering Center, Office of Science and Technology, National Weather Service, National Oceanic and Atmospheric Administration, Silver Spring, MD 20910, Appointment Expires: 12/31/05 (Limited).

Michelle O'Neill (C), Deputy Under Secretary of Commerce for Technology, Technology Administration, Department of Commerce, Washington, DC 20230, Appointment Expires: 12/31/06 (General).

Patricia Sefcik (C), Senior Director to the Deputy Assistant Secretary for Manufacturing, Manufacturing and Services, International Trade Administration, Department of Commerce, Washington, DC 20230, Appointment Expires: 12/31/07 (General).

Dated: July 29, 2005.

Michelle O'Neill,

Acting Under Secretary of Commerce for Technology, Technology Administration, Department of Commerce.

[FR Doc. 05–16278 Filed 8–16–05; 8:45 am]

BILLING CODE 3510–18–M

DEPARTMENT OF DEFENSE

GENERAL SERVICES ADMINISTRATION

NATIONAL AERONAUTICS AND SPACE ADMINISTRATION

[OMB Control No. 9000–0144]

Federal Acquisition Regulation; Submission for OMB Review; Payment by Electronic Fund Transfer

AGENCIES: Department of Defense (DOD), General Services Administration (GSA), and National Aeronautics and Space Administration (NASA).

ACTION: Notice of request for public comments regarding an extension to an existing OMB clearance (9000–0144).

SUMMARY: Under the provisions of the Paperwork Reduction Act of 1995 (44 U.S.C. Chapter 35), the Federal Acquisition Regulation (FAR) Secretariat has submitted to the Office of Management and Budget (OMB) a request to review and approve an extension of a currently approved information collection requirement concerning payment by electronic fund transfer. A request for public comments was published in the **Federal Register** at 70 FR 34104, June 13, 2005. No comments were received.

Public comments are particularly invited on: Whether this collection of information is necessary for the proper performance of functions of the FAR, and whether it will have practical utility; whether our estimate of the public burden of this collection of information is accurate, and based on valid assumptions and methodology; ways to enhance the quality, utility, and clarity of the information to be collected; and ways in which we can minimize the burden of the collection of information on those who are to respond, through the use of appropriate technological collection techniques or other forms of information technology.

DATES: Submit comments on or before September 16, 2005.

ADDRESSES: Submit comments regarding this burden estimate or any other aspect of this collection of information, including suggestions for reducing this burden to the General Services Administration, FAR Secretariat (VIR), 1800 F Street, NW, Room 4035, Washington, DC 20405. Please cite OMB Control No. 9000–0144, Payment by Electronic Fund Transfer, in all correspondence.

FOR FURTHER INFORMATION CONTACT Jeremy F. Olson, Contract Policy Division, GSA, (202) 501–3221.

SUPPLEMENTARY INFORMATION:

A. Purpose

The FAR requires certain information to be provided by contractors which would enable the Government to make payments under the contract by electronic fund transfer (EFT). The information necessary to make the EFT transaction is specified in clause 52.232–33, Payment by Electronic Funds Transfer—Central Contractor Registration, which the contractor is required to provide prior to award, and clause 52.232–34, Payment by Electronic Funds Transfer—Other than Central Contractor Registration, which requires EFT information to be provided as specified by the agency to enable payment by EFT.

B. Annual Reporting Burden

Respondents: 14,000.
Responses Per Respondent: 10.
Annual Responses: 140,000.
Hours Per Response: .5.
Total Burden Hours: 70,000.
Obtaining Copies of Proposals: Requesters may obtain a copy of the information collection documents from the General Services Administration, FAR Secretariat (VIR), Room 4035, 1800 F Street, NW, Washington, DC 20405, telephone (202) 501–4755. Please cite OMB Control No.9000–0144, Payment by Electronic Fund Transfer, in all correspondence.

Dated: July 19, 2005.

Julia B. Wise,

Director, Contract Policy Division.

[FR Doc. 05–16255 Filed 8–16–05; 8:45 am]

BILLING CODE 6820–EP–S

DEPARTMENT OF EDUCATION

Notice of Proposed Information Collection Requests

AGENCY: Department of Education.

SUMMARY: The Leader, Information Management Case Services Team, Regulatory Information Management Services, Office of the Chief Information Officer, invites comments on the proposed information collection requests as required by the Paperwork Reduction Act of 1995.

DATES: Interested persons are invited to submit comments on or before October 17, 2005.

SUPPLEMENTARY INFORMATION: Section 3506 of the Paperwork Reduction Act of 1995 (44 U.S.C. Chapter 35) requires that the Office of Management and Budget (OMB) provide interested Federal agencies and the public an early opportunity to comment on information collection requests. OMB may amend or waive the requirement for public consultation to the extent that public participation in the approval process would defeat the purpose of the information collection, violate State or Federal law, or substantially interfere with any agency's ability to perform its statutory obligations. The Leader, Information Management Case Services Team, Regulatory Information Management Services, Office of the Chief Information Officer, publishes that notice containing proposed information collection requests prior to submission of these requests to OMB. Each proposed information collection, grouped by office, contains the following: (1) Type of review requested, *e.g.* new, revision, extension, existing or reinstatement; (2) Title; (3) Summary of the collection; (4) Description of the need for, and proposed use of, the information; (5) Respondents and frequency of collection; and (6) Reporting and/or Recordkeeping burden. OMB invites public comment.

The Department of Education is especially interested in public comment addressing the following issues: (1) Is this collection necessary to the proper functions of the Department; (2) will this information be processed and used in a timely manner; (3) is the estimate of burden accurate; (4) how might the Department enhance the quality, utility, and clarity of the information to be collected; and (5) how might the Department minimize the burden of this collection on the respondents, including through the use of information technology.

Dated: August 11, 2005.

Angela C. Arrington,

Leader, Information Management Case Services Team, Regulatory Information Management Services, Office of the Chief Information Officer.

Federal Student Aid

Type of Review: Extension.

Title: Federal Perkins Loan Program Regulations and General Provision Regulations.

Frequency: Annually.

Affected Public: Not-for-profit institutions; Individuals or household; Businesses or other for-profit.

Reporting and Recordkeeping Hour Burden:

Responses: 95,262.

Burden Hours: 25,859.

Abstract: Institutions of higher education make Perkins loans. Information is necessary in order to monitor a school's reimbursement to its Perkins loan revolving fund, monitor how collection costs are charged to borrowers on rehabilitation loans and to monitor the assignment of defaulted Perkins loans to the Department. The public is alerted that this package is a request for an extension of a currently approved collection. Until the anticipated reauthorization of the Higher Education Act and any resulting changes to the implementing regulations, the existing paperwork collection is simply extended, rather than revised.

Requests for copies of the proposed information collection request may be accessed from *http://edicsweb.ed.gov,* by selecting the ''Browse Pending Collections'' link and by clicking on link number 2848. When you access the information collection, click on ''Download Attachments'' to view. Written requests for information should be addressed to U.S. Department of Education, 400 Maryland Avenue, SW., Potomac Center, 9th Floor, Washington, DC 20202–4700. Requests may also be electronically mailed to the Internet address *OCIO_RIMG@ed.gov* or faxed to 202–245–6621. Please specify the complete title of the information collection when making your request.

Comments regarding burden and/or the collection activity requirements should be directed to Joseph Schubart at his e-mail address *Joe.Schubart@ed.gov.* Individuals who use a telecommunications device for the deaf (TDD) may call the Federal Information Relay Service (FIRS) at 1–800–877–8339.

Federal Student Aid

Type of Review: Extension.

Title: Federal Family Education Loan Program Regulations.

Frequency: On Occasion.

Affected Public: Not-for-profit institutions; Individuals or household; Businesses or other for-profit; State, Local, or Tribal Gov't, SEAs or LEAs.

Reporting and Recordkeeping Hour Burden:

Responses: 858,981.

Burden Hours: 10,128,562.

Abstract: The Federal Family Education Loan Program proposed regulations revise the current regulations in areas of program administration. The regulations assure the Secretary that the integrity of the program is protected from fraud and other misuse of program funds. The public is alerted that this package is a request for an extension of a currently approved collection. Until the anticipated reauthorization of the Higher Education Act and any resulting changes to the implementing regulations, the existing paperwork collection is simply extended, rather than revised.

Requests for copies of the proposed information collection request may be accessed from *http://edicsweb.ed.gov,* by selecting the ''Browse Pending Collections'' link and by clicking on link number 2849. When you access the information collection, click on ''Download Attachments'' to view. Written requests for information should be addressed to U.S. Department of Education, 400 Maryland Avenue, SW., Potomac Center, 9th Floor, Washington, DC 20202–4700. Requests may also be electronically mailed to the Internet address *OCIO_RIMG@ed.gov* or faxed to 202–245–6621. Please specify the complete title of the information collection when making your request.

Comments regarding burden and/or the collection activity requirements should be directed to Joseph Schubart at his e-mail address *Joe.Schubart@ed.gov.* Individuals who use a telecommunications device for the deaf (TDD) may call the Federal Information Relay Service (FIRS) at 1–800–877–8339.

Federal Student Aid

Type of Review: Extension.

Title: William D. Ford Federal Direct Loan Program.

Frequency: On Occasion.

Affected Public: Individuals or household; Businesses or other for-profit; Not-for-profit institutions.

Reporting and Recordkeeping Hour Burden:

Responses: 846,034.

Burden Hours: 211,520.

Abstract: The proposed regulations change three sections of the regulations that are currently cleared under the Paperwork Reduction Act. The proposed regulations do not affect the current burden hour estimates for this information collection. The public is alerted that this package is a request for an extension of a currently approved collection. Until the anticipated reauthorization of the Higher Education Act and any resulting changes to the implementing regulations, the existing paperwork collection is simply extended, rather than revised.

Requests for copies of the proposed information collection request may be accessed from *http://edicsweb.ed.gov,* by selecting the ''Browse Pending Collections'' link and by clicking on link number 2850. When you access the information collection, click on ''Download Attachments'' to view. Written requests for information should be addressed to U.S. Department of Education, 400 Maryland Avenue, SW., Potomac Center, 9th Floor, Washington, DC 20202–4700. Requests may also be electronically mailed to the Internet address *OCIO_RIMG@ed.gov* or faxed to 202–245–6621. Please specify the complete title of the information collection when making your request.

Comments regarding burden and/or the collection activity requirements should be directed to Joseph Schubart at his e-mail address *Joe.Schubart@ed.gov.* Individuals who use a telecommunications device for the deaf (TDD) may call the Federal Information Relay Service (FIRS) at 1–800–877–8339.

Federal Student Aid

Type of Review: Extension.

Title: Cohort Default Rates for Institutions Participating in the FFEL or Direct Loan Programs.

Frequency: On Occasion.

Affected Public: Not-for-profit institutions; Individuals or household; State, Local, or Tribal Gov't, SEAs or LEAs.

Reporting and Recordkeeping Hour Burden:

Responses: 93,877.

Burden Hours: 1,209,890.

Abstract: The regulations establish the standards to participate in the student financial assistance programs authorized by Title IV of the Higher Education Act of 1965 (Title IV, HEA programs). The public is alerted that this package is a request for an extension of a currently approved collection. Until the anticipated reauthorization of the Higher Education Act and any resulting changes to the implementing regulations, the existing paperwork collection is simply extended, rather than revised.

Requests for copies of the proposed information collection request may be accessed from *http://edicsweb.ed.gov,* by selecting the ''Browse Pending Collections'' link and by clicking on link number 2851. When you access the information collection, click on ''Download Attachments'' to view.

Written requests for information should be addressed to U.S. Department of Education, 400 Maryland Avenue, SW., Potomac Center, 9th Floor, Washington, DC 20202–4700. Requests may also be electronically mailed to the Internet address *OCIO_RIMG@ed.gov* or faxed to 202–245–6621. Please specify the complete title of the information collection when making your request.

Comments regarding burden and/or the collection activity requirements should be directed to Joseph Schubart at his e-mail address *Joe.Schubart@ed.gov.* Individuals who use a telecommunications device for the deaf (TDD) may call the Federal Information Relay Service (FIRS) at 1–800–877–8339.

Federal Student Aid

Type of Review: Extension.

Title: Federal Perkins Loan Program Regulations.

Frequency: Annually.

Affected Public: Not-for-profit institutions; Individuals or household; Businesses or other for-profit.

Reporting and Recordkeeping Hour Burden:

Responses: 2,800,642.

Burden Hours: 61,879.

Abstract: Institutions of higher education make Perkins loans. Information is necessary in order to monitor a school's reimbursement to its Perkins loan revolving fund, monitor how collection costs are charged to borrowers on rehabilitated loans and to monitor the assignment of defaulted Perkins loans to the Department. The public is alerted that this package is a request for an extension of a currently approved collection. Until the anticipated reauthorization of the Higher Education Act and any resulting changes to the implementing regulations, the existing paperwork collection is simply extended, rather than revised.

Requests for copies of the proposed information collection request may be accessed from *http://edicsweb.ed.gov,* by selecting the ''Browse Pending Collections'' link and by clicking on link number 2852. When you access the information collection, click on ''Download Attachments'' to view. Written requests for information should be addressed to U.S. Department of Education, 400 Maryland Avenue, SW., Potomac Center, 9th Floor, Washington, DC 20202–4700. Requests may also be electronically mailed to the Internet address *OCIO_RIMG@ed.gov* or faxed to 202–245–6621. Please specify the complete title of the information collection when making your request.

Comments regarding burden and/or the collection activity requirements should be directed to Joseph Schubart at his e-mail address *Joe.Schubart@ed.gov.* Individuals who use a telecommunications device for the deaf (TDD) may call the Federal Information Relay Service (FIRS) at 1–800–877–8339.

Federal Student Aid

Type of Review: Extension.

Title: Application for Ability to Benefit Testing Approval.

Frequency: Annually.

Affected Public: Businesses or other for-profit; Individuals or household; Not-for-profit institutions.

Reporting and Recordkeeping Hour Burden:

Responses: 150,090.

Burden Hours: 77,040.

Abstract: The Secretary will publish a list of approved tests which can be used by postsecondary educational institutions to establish the ability to benefit for a student who does not have a high school diploma or its equivalent for Student Financial Assistance Programs. The public is alerted that this package is a request for an extension of a currently approved collection. Until the anticipated reauthorization of the Higher Education Act and any resulting changes to the implementing regulations, the existing paperwork collection is simply extended, rather than revised.

Requests for copies of the proposed information collection request may be accessed from *http://edicsweb.ed.gov,* by selecting the ''Browse Pending Collections'' link and by clicking on link number 2844. When you access the information collection, click on ''Download Attachments'' to view. Written requests for information should be addressed to U.S. Department of Education, 400 Maryland Avenue, SW., Potomac Center, 9th Floor, Washington, DC 20202–4700. Requests may also be electronically mailed to the Internet address *OCIO_RIMG@ed.gov* or faxed to 202–245–6621. Please specify the complete title of the information collection when making your request.

Comments regarding burden and/or the collection activity requirements should be directed to Joseph Schubart at his e-mail address *Joe.Schubart@ed.gov.* Individuals who use a telecommunications device for the deaf (TDD) may call the Federal Information Relay Service (FIRS) at 1–800–877–8339.

Federal Student Aid

Type of Review: Revision.

Title: Student Assistance General Provisions—Subpart I—Immigration Status Confirmation.

Frequency: On Occasion.

Affected Public: Businesses or other for-profit; Not-for-profit institutions.

Reporting and Recordkeeping Hour Burden:

Responses: 11.

Burden Hours: 16,370.

Abstract: Collection of this information used for immigration status confirmation reduces the potential of fraud and abuse caused by ineligible aliens receiving Federally subsidized student financial assistance under Title IV of the Higher Education Act (HEA) of 1965, as amended. The respondent population is comprised of 6,160 postsecondary institutions who participate in administration of the Title IV, HEA programs.

Requests for copies of the proposed information collection request may be accessed from *http://edicsweb.ed.gov,* by selecting the ''Browse Pending Collections'' link and by clicking on link number 2845. When you access the information collection, click on ''Download Attachments'' to view. Written requests for information should be addressed to U.S. Department of Education, 400 Maryland Avenue, SW., Potomac Center, 9th Floor, Washington, DC 20202–4700. Requests may also be electronically mailed to the Internet address *OCIO_RIMG@ed.gov* or faxed to 202–245–6621. Please specify the complete title of the information collection when making your request.

Comments regarding burden and/or the collection activity requirements should be directed to Joseph Schubart at his e-mail address *Joe.Schubart@ed.gov.* Individuals who use a telecommunications device for the deaf (TDD) may call the Federal Information Relay Service (FIRS) at 1–800–877–8339.

Federal Student Aid

Type of Review: Extension.

Title: Student Assistance General Provisions—Subpart K—Cash Management.

Frequency: On Occasion.

Affected Public: Not-for-profit institutions; Individuals or household.

Reporting and Recordkeeping Hour Burden:

Responses: 6,576.

Burden Hours: 1,218,718.

Abstract: These regulations comprise the existing provisions of the Student Assistance General Provisions guidance regarding cash management. Information collection under these regulations relates to cash management

requirements and practices for institutions participating in the Title IV, Higher Education Act (HEA) programs. The public is alerted that this package is a request for an extension of a currently approved collection. Until the anticipated reauthorization of the Higher Education Act and any resulting changes to the implementing regulations, the existing paperwork collection is simply extended, rather than revised.

Requests for copies of the proposed information collection request may be accessed from *http://edicsweb.ed.gov,* by selecting the ''Browse Pending Collections'' link and by clicking on link number 2853. When you access the information collection, click on ''Download Attachments'' to view. Written requests for information should be addressed to U.S. Department of Education, 400 Maryland Avenue, SW., Potomac Center, 9th Floor, Washington, DC 20202–4700. Requests may also be electronically mailed to the Internet address *OCIO_RIMG@ed.gov* or faxed to 202–245–6621. Please specify the complete title of the information collection when making your request.

Comments regarding burden and/or the collection activity requirements should be directed to Joseph Schubart at his e-mail address *Joe.Schubart@ed.gov.* Individuals who use a telecommunications device for the deaf (TDD) may call the Federal Information Relay Service (FIRS) at 1–800–877–8339.

[FR Doc. 05–16252 Filed 8–16–05; 8:45 am]
BILLING CODE 4000–01–P

DEPARTMENT OF ENERGY

Conveyance and Transfer of Certain Land Tracts Administered by the Department of Energy and Located at Los Alamos National Laboratory, Los Alamos and Santa Fe Counties, NM

AGENCY: Department of Energy, National Nuclear Security Administration

ACTION: Amended record of decision.

SUMMARY: The U.S. Department of Energy's National Nuclear Security Administration (DOE/NNSA) is amending the Record of Decision (ROD) for the Environmental Impact Statement for the Conveyance and Transfer of Certain Land Tracts Administered by the Department of Energy and Located at Los Alamos National Laboratory, Los Alamos and Santa Fe Counties, New Mexico, DOE/EIS–0293 (Conveyance and Transfer EIS) to reflect changes in the need to retain a certain portion of a land tract withheld earlier due to potential national security mission requirements for a health and safety buffer area relating to on-going operations. Specifically, DOE/NNSA has reassessed its need for a certain portion of a tract to serve as a health and safety buffer area for current and post-operations cleanup of its tritium-related activities at Los Alamos National Laboratory's (LANL's) Technical Area 21 (TA–21). DOE/NNSA no longer needs to retain a 32.3-acre portion of the Airport Tract located along the south side of State Road 502 for this purpose.

FOR FURTHER INFORMATION CONTACT: For further information concerning the conveyance or transfer of land tracts or this amended ROD, contact: Elizabeth Withers, NEPA Compliance Officer, Los Alamos Site Office, National Nuclear Security Administration, 528 35th Street, Los Alamos, NM 87004 Telephone (505) 667–8690.

For further information concerning DOE's National Environmental Policy Act (NEPA) process, contact: Ms. Carol Borgstrom, Director, Office of NEPA Policy and Compliance (EH–42), U.S. Department of Energy, 1000 Independence Avenue, SW., Washington, DC 20585, Telephone (202) 586–4600, or leave a message at 1–800–472–2756.

Additional information regarding the DOE NEPA process and activities is also available on the Internet through the NEPA home page at *http://www.eh.doe.gov/nepa.* Copies of the Conveyance and Transfer EIS and the 2000 ROD are also available on the NEPA Web site, along with this and one other amended RODs (discussed in later paragraphs).

SUPPLEMENTARY INFORMATION:

I. Background

A. Legal Requirements for Action

LANL is one of several national security laboratories that support DOE's and NNSA's responsibilities for national security, energy resources, environmental quality, and science. Located in north-central New Mexico, LANL is about 60 miles (97 kilometers) north-northeast of Albuquerque, and about 25 miles (40 kilometers) northwest of Santa Fe. The small communities of Los Alamos townsite, White Rock, Pajarito Acres, the Royal Crest Mobile Home Park, and San Ildefonso Pueblo are located in the immediate vicinity of LANL. LANL occupies an area of approximately 25,600 acres (10,360 hectares), or approximately 40 square miles (104 square kilometers). DOE also has administrative control over other properties and land within Los Alamos County that total about 915 acres (371 hectares).

On November 26, 1997, Congress passed Public Law 105–119, the Departments of Commerce, Justice, and State, the Judiciary, and Related Agencies Appropriations Act, Fiscal Year 1998 (''the Act''). Section 632 of the Act (42 U.S.C. 2391) directs the Secretary of Energy (the Secretary) to convey to the Incorporated County of Los Alamos, New Mexico, or to the designee of the County, and transfer to the Department of the Interior, in trust for the San Ildefonso Pueblo, parcels of land under the jurisdictional administrative control of the Secretary at or in the vicinity of LANL. Such parcels, or tracts, of land must meet suitability criteria established by the Act. The purpose of the conveyances and transfers is to fulfill the obligations of the United States with respect to Los Alamos, New Mexico, under sections 91 and 94 of the Atomic Energy Community Act of 1955 (AECA) (42 U.S.C. 2391, 2394). Upon the completion of the conveyance or transfer, the Secretary of Energy shall make no further financial assistance payments with respect to LANL under the AECA.

The Act sets forth the criteria, processes, and dates by which the tracts will be selected, titles to the tracts reviewed, environmental issues evaluated, and decisions made as to the allocation of the tracts between the two recipients. DOE's responsibilities under the Act include identifying potentially suitable tracts of land according to criteria set forth in the law (Land Transfer Report, April 1998); conducting a title search on each tract of land (Title Report, September 1998); identifying any environmental restoration and remediation that would be needed for each tract of land (Environmental Restoration Report, August 1999); conducting National Environmental Policy Act of 1969 (NEPA) review of the proposed conveyance or transfer of the land tracts (the Conveyance and Transfer EIS, October 1999, distributed in January 2000); reporting to Congress on the results of the Environmental Restoration Report review and the final Conveyance and Transfer EIS (Combined Data Report, January 2000); and preparing a plan for conveying or transferring land according to the allocation agreement of parcels for Congress (Conveyance and Transfer Plan, April 2000). The Act further states that the Secretary must, to the maximum extent practicable, conduct any needed environmental restoration or remediation activities within 10 years of enactment (by

November 26, 2007), and convey and transfer the tracts meeting the suitability criteria. Under the Act, DOE neither had a role in the designation of recipients, nor in how the parcels of land were to be allocated between the recipients. As specified in PL 105–119, the actual disposition of each tract, or portion of a tract, would be subject to DOE's need for the individual tract, or a portion of the tract, to meet a national security mission support function, which could range from either direct or indirect activity involvement. Additionally, the disposition of each tract, or portion of a tract, would be subject to DOE's completion of any necessary environmental restoration or remediation required.

B. Previous Decision on the Conveyance and Transfer Actions

In the 2000 ROD for the Conveyance and Transfer EIS (65 **Federal Register** (FR), Number 54, Page 14952, March 20, 2000), DOE stated its decision to convey and transfer each of the ten subject tracts, either in whole or in part, by November 26, 2007. DOE's decision, consistent with the Preferred Alternative analyzed in the Conveyance and Transfer EIS, was to convey or transfer seven tracts in whole and three tracts (the Airport, TA–21 and White Rock Y Tracts) in part. Portions of the three partial tracts were not conveyed or transferred by DOE because of potential national security mission needs for retaining security, health, and safety buffer zones surrounding operational areas identified by DOE prior to the issuance of the ROD. While the suitability criteria were considered in the formulation of the Preferred Alternative, the national security mission support criteria led DOE to the recognition that portions of the these tracts may not be available for conveyance or transfer within the 10-year period specified by PL 105–119. DOE's decision at that time was to convey or transfer 110 acres of the Airport Tract, 20 acres of the TA–21 Tract, and 125 acres of the White Rock Y Tract. DOE stated in the ROD that it would make every effort to minimize the portions of the tracts it retains and only retain essential areas and convey or transfer the remainder of the tracts before the 2007 deadline.

On June 26, 2002, NNSA issued an Amended ROD [67 FR 45495; July 9, 2002 (No. 131)] that announced NNSA's determination that an 8-acre portion of the Airport Tract at its western end that had been retained to serve as a health and safety buffer zone was no longer required for that purpose and could be conveyed. NNSA additionally identified that two portions of the White Rock Y Tract containing stretches of public roadways along State Road 502 and State Road 4 totaling about 74 acres that were unlikely to be needed to serve as health and safety buffers and could be conveyed as well.

The Airport Tract originally consisted of about 205 acres (83 hectares). Located east of the Los Alamos townsite, it is close to the East Gate Business Park. The Los Alamos Airport is located on part of the tract, while other portions of the tract are undeveloped. NNSA currently retains about 87 acres of land within the original Airport Tract under its administrative control.

The TA–21 Tract originally consisted of about 260 acres (105 hectares). This tract is located at the eastern end of DP Mesa between DP and Los Alamos Canyons close to the business district of the Los Alamos townsite. LANL's TA–21 is one of the oldest technical areas at LANL; it is the site of the former plutonium processing facility and the current location of the Tritium Science and Fabrication Facility (TSFF). The Tritium Systems Test Assembly (TSTA) operations were located at TA–21 until about a year ago when these operations ceased. The NNSA currently retains about 240 acres of this tract under its administrative control.

The White Rock Y Tract originally consisted of about 540 acres (219 hectares). It is undeveloped and portions of the tract are associated with the major transportation routes connecting Los Alamos with northern New Mexico. The NNSA currently retains about 341 acres of this tract under its administrative control.

II. Need To Change the Conveyance and Transfer Portions of a Retained Tract

The original 2000 ROD for the Conveyance and Transfer EIS stated that for the tracts that were conveyed in part, DOE would continue to resolve outstanding national security mission support issues on the remaining portions of the tracts so that conveyance or transfer of those portions could occur before the end of the 2007 deadline stated in the Act. DOE could include deed restrictions, notices, and similar land use controls as deemed appropriate and necessary that are protective of human health and safety to facilitate the transfer of the remaining portions of tracts.

A. Need for Existing Facilities at TA–21

In 2000, TA–21 Tract housed both the Tritium Systems Test Assembly (TSTA) and the Tritium Sciences and Fabrication Facility (TSFF), and both of these facilities were scheduled to continue operation past the year 2007. These two research facilities were identified as being needed for the national security mission and there were no formal plans to relocate them at that time. However, DOE was even then in the early stages of assessing the feasibility of relocating these operations to another facility within LANL. Over the past four years, NNSA has reviewed both its long-term continued need for the TSTA facility and the feasibility of relocating the TSFF tritium operations away from TA–21 to other tritium operations facilities at LANL. NNSA concluded in 2002 that the operation of the TSTA was not needed in the long term and the facility has since been discontinued. The TSFF is planed for relocation to another LANL site. The nuclear material inventory of the TA–21 facilities has been reduced according to these changes in site operations. The discontinuance of the TSTA facility operations and removal of the TSFF facility operations, together with removal of TA–21 offices and assorted storage support facilities, would allow the facility and all of TA–21 to be completely decommissioned, decontaminated and demolished. It is unlikely, however, that all three of these steps in the dismantling of the technical area could occur before 2007. In the near term, however, NNSA has determined that about an additional 32.3-acre portion of the Airport Tract situated along the south side of State Road 502 on the Townsite Mesa top (and to the north of TA21) that had been retained for the purpose of serving as a health and safety buffer for the TA–21 TSTA and TSFF operations is no longer required for that purpose. This partial tract (referred to as A–5–1) can now be conveyed. This will leave about 55 acres of land within the Airport Tract under the administrative control of the NNSA.

III. Amended Decision

NNSA is modifying its decision on conveyance and transfer of certain land tracts at LANL as stated in the following paragraph. Should NNSA no longer need portions of these and other tracts for national security mission support needs, NNSA will again reassess the retainment of partial tract areas and amend the Record of Decision, as needed.

- *The Airport Tract* currently consists of about 87 acres (35 hectares), east of the Los Alamos townsite and near the East Gate Business Park. The Los Alamos Airport is located on the northern part of the tract, while other portions of the tract are undeveloped. Portions of the Airport Tract will continue to be needed to serve as health

and safety buffer areas for the tritium activities while they continue within TA–21. In March 2000, DOE decided to convey or transfer part of the tract, approximately 110 acres North of East Road. With the planned shutdown of portions of its tritium activities at TA–21, NNSA conveyed an additional 8-acre portion of the Airport Tract in 2002. NNSA will now convey a 32.3-acre portion of the Airport Tract located along the south side of State Road 502 that is on top of Townsite Mesa.

Issued in Washington, DC, July 28, 2005.

Linton F. Brooks,

Administrator, National Nuclear Security Administration.

[FR Doc. 05–16276 Filed 8–16–05; 8:45 am]

BILLING CODE 6450–01–P

DEPARTMENT OF ENERGY

Federal Energy Regulatory Commission

[Project No. 2146–111, Project No. 82 and Project No. 618]

Alabama Power Company; Notice of Application Tendered for Filing With the Commission, and Establishing Procedural Schedule for Relicensing and a Deadline for Submission of Final Amendments

August 11, 2005.

Take notice that the following hydroelectric application has been filed with the Commission and is available for public inspection.

a. *Type of Application:* New Major License.

b. *Project No.:* P–2146–111.

c. *Date Filed:* July 28, 2005.

d. *Applicant:* Alabama Power Company.

e. *Name of Project:* Coosa River Hydroelectric Project, which includes the Weiss, H. Neely Henry, Logan Martin, Lay and Bouldin developments, the Mitchell Hydroelectric Project (P–82), and the Jordan Hydroelectric Project (P–618). Alabama Power Company has requested that Project Nos. 2146, 82, and 618 be consolidated into one project. We intend to process these three projects under Project No. 2146–111.

f. *Location:* On the Coosa River, in the states of Alabama and Georgia. The Logan Martin development affects less than an acre of federal lands, the Lay development affects 133.5 acres of federal lands, the Mitchell Project affects 127.3 acres of federal lands, and the Jordan Project affects 10.1 acres of federal lands.

g. *Filed Pursuant to:* Federal Power Act 16 U.S.C. 791 (a)–825(r).

h. *Applicant Contact:* Mr. Jerry L. Stewart, Senior Vice President and Senior Production Officer, Alabama Power Company, 600 North 18th Street, P.O. Box 2641, Birmingham, AL 35291–8180

i. *FERC Contact:* Janet Hutzel, (202) 502–8675 or *janet.hutzel@ferc.gov.*

j. *Cooperating agencies:* We are asking Federal, state, local, and tribal agencies with jurisdiction and/or special expertise with respect to environmental issues to cooperate with us in the preparation of the environmental document. Agencies who would like to request cooperating status should follow the instructions for filing such requests described in item k below.

k. *Deadline for request for cooperating agency status:* September 26, 2005.

All documents (original and eight copies) should be filed with: Magalie R. Salas, Secretary, Federal Energy Regulatory Commission, 888 First Street, NE., Washington, DC 20426.

The Commission's Rules of Practice require all intervenors filing documents with the Commission to serve a copy of that document on each person on the official service list for the project. Further, if an intervenor files comments or documents with the Commission relating to the merits of an issue that may affect the responsibilities of a particular resource agency, they must also serve a copy of the document on that resource agency.

Requests for cooperating agency status may be filed electronically via the Internet in lieu of paper. The Commission strongly encourages electronic filings. See 18 CFR 385.2001(a)(1)(iii) and the instructions on the Commission's Web site (*http://www.ferc.gov*) under the ''e-Filing'' link. The Commission strongly encourages electronic filing.

l. This application has not been accepted for filing. We are not soliciting motions to intervene, protests, or final terms and conditions at this time.

m. *Description of Project:* The proposed Coosa River Project would consist of seven developments. The Weiss, Neely Henry, and Logan Martin developments would operate in peaking mode. The Lay, Mitchell, Jordan, and Bouldin developments would operate in run-of-river mode. The total capacity for all developments is 960.9 MW, generating about 2,964,054 MWh of energy annually. The project works would include the following:

Weiss Development

The Weiss development consists of: (1) A total of 30,798 feet of water retaining structures which includes a diversion dam and gated spillway, powerhouse about 3.5 miles from the spillway, and earth embankments consisting of: (a) A 7,000-foot-long power canal which carries water from the main reservoir to the powerhouse forebay, (b) a 1,300 foot-long tailrace canal which carries water from the tailrace to the Coosa River, (c) 1.7-mile-long east and 1.8-mile-long west earthfill embankments extending from the powerhouse, (d) 1.35-mile-long east and 1.0-mile-long west earth embankments extending from the spillway, (e) three freeboard dikes, (f) a 120-foot-long and 140-foot-long concrete gravity non-overflow structure to the left and right of the powerhouse, (g) a retaining wall to the left of the spillway, a non-overflow structure to the right of the spillway, (h) a concrete gated spillway equipped with five 40-foot-wide by 38-foot-high Taintor gates and one 16-foot-wide by 22-foot-high Taintor gate which serves as a trash gate, (i) a second trash gate of same dimension located to the right of the powerhouse, and (j) the project configuration resulting in a 20-mile-long bypassed reach of the Coosa River; (2) a 52-mile-long, 30,200-acre reservoir at normal pool elevation 564 feet m.s.l., and total storage capacity of 704,404 acre-ft at maximum elevation 574 feet m.s.l.; (3) a 256-foot-long concrete powerhouse, housing three 39,100 horse power vertical fixed-blade turbines and generating units, each rated at 29.5 MW, a total rated capacity of 87.75 MW, maximum hydraulic capacity of 8,400 cfs, and total hydraulic capacity of 25,200 cfs. Estimated generation is 215,500 MWh.; (4) trashracks located at the turbine intakes with 6-inch bar spacing; (5) a substation; and (6) other appurtenances. Two 115-kilovolt transmission lines, which are not part of the project, connect the substation to Alabama Power's transmission system.

H. Neely Henry Development

The H. Neely Henry development consists of: (1) A total of 4,705 feet of water retaining structures which includes a concrete dam and two earthen embankment sections consisting of: (a) A 305-foot-long spillway equipped with six 40-foot-wide by 29-foot-high Taintor gates, (b) a 300-foot-long intake section, (c) a 120-foot-long non-overflow bulk head section at the east end of the spillway, and (d) a 133-foot-long non-overflow section at the west end of the spillway; (2) a 78-mile-long, 11,235-acre reservoir at normal pool elevation 508 feet m.s.l., and total storage capacity of 30,640 acre-ft at normal elevation 508 feet m.s.l.; (3) a 300-foot-long concrete powerhouse, housing three 33,500 horse power

vertical propeller turbines and generating units, each rated at 24.3 MW, a total rated capacity of 72.9 MW, maximum hydraulic capacity of 8,900 cfs, and total hydraulic capacity of 26,700 cfs. The estimated generation is 210,700 MWh.; (4) trashracks located at the turbine intakes with 6-inch bar spacing; (5) a substation; and (6) other appurtenances. Two 115-kilovolt transmission lines, which are not part of the project, connect the substation to Alabama Power's transmission system.

Logan Martin Development

The Logan Martin development consists of: (1) A total of 6,192 feet of water retaining structures which includes a 100-foot-high concrete dam and gated spillway, powerhouse and earthen embankment section consisting of: (a) A 327-foot-long concrete spillway equipped with six 40-foot-wide by 38-foot-high Taintor gates, and one 17.5-foot-wide by 21-foot-high vertical trash gate, (b) a 4,650-foot-long east earth embankment, (c) a 850-foot-long west earth embankment, (d) a 120-foot-long concrete powerhouse intake; (2) a 48.5-mile-long, 15,263-acre reservoir at normal pool elevation 465 feet m.s.l., and total storage capacity of 273,500 acre-ft at normal elevation 465 feet m.s.l.; (3) a 295-foot-long concrete powerhouse, housing three 59,000 horse power vertical propeller turbines and generating units, each rated at 42.75 MW, a total rated capacity of 128.25 MW, maximum hydraulic capacity of 11,000 cfs, and total hydraulic capacity of 33,000 cfs. The estimated generation is 400,200 MWh; (4) trashracks located at the turbine intakes with 6-inch bar spacing; (5) a substation; and (6) other appurtenances. Four 115-kilovolt transmission lines, which are not part of the project, connect the substation to Alabama Power's transmission system.

Lay Development

The Lay development consists of: (1) A total of 2,120 feet of water retaining structures which includes a concrete dam and gated spillway, integrated powerhouse, and an earthen embankment section consisting of: (a) A 194-foot-long concrete bulkhead, (b) a 304-foot-long concrete intake section, (c) a 930-foot-long gated concrete spillway section equipped with twenty-six 30-foot-wide by 17-foot-high radial lift gates, (d) a 180-foot-long concrete bulkhead, and (e) a 512-foot-long earth embankment; (2) a 48.2-mile-long, 12,000-acre reservoir at normal pool elevation 465 feet m.s.l.; (3) a 376-foot-long concrete powerhouse, housing six 40,000 horse power vertical turbines and generating units, each rated at 29.5 MW, a total rated capacity of 177 MW, maximum hydraulic capacity of 5,100 cfs, and total hydraulic capacity of 30,600 cfs. The estimated generation is 639,445 MWh; (4) a total of 144 trashracks located at the turbine intakes with 6-inch bar spacing; (5) a substation and (6) other appurtenances. Four 115-kilovolt transmission lines, which are not part of the project, connect the substation to Alabama Power's transmission system.

Mitchell Development

The Mitchell development consists of: (1) A total of 1,264 feet of water retaining structures which includes a concrete dam and gated spillway, and two powerhouses consisting of: (a) A 964-foot-long gated concrete spillway section equipped with twenty-three 30-foot-wide by 15-foot-high timber faced radial lift gates, and three 30-foot-wide by 25-foot-high steel faced radial gates; (2) a 14-mile-long 5,850-acre reservoir at normal pool elevation 312 feet m.s.l.; (3) two powerhouses which includes; (a) The original 449-foot-long concrete powerhouse, housing one 29,000 horse power vertical turbine and generating unit, rated at 20 MW, maximum hydraulic capacity of 4,788 cfs, and b) a new 300-foot-long concrete powerhouse housing three 69,000 horse power vertical turbines and generating units, rated at 50 MW each, a total rated capacity of 150 MW, maximum hydraulic capacity of 10,454 cfs each, and total hydraulic capacity of 31,362 cfs. The total rated capacity for both project powerhouses is 170 MW, and total estimated generation is 527,666 MWh; (4) a total of 124 trashracks located at the turbine intakes with 6-inch bar spacing; (5) a substation; and (6) other appurtenances. Four 115-kilovolt transmission lines, which are not part of the project, connect the substation to Alabama Power's transmission system.

Jordan Development

The Jordan development consists of: (1) A total of 2,066 feet of water retaining structures which includes a 125-foot-high concrete dam and gated spillway, and integrated powerhouse consisting of: (a) A 75-foot-long non-overflow concrete bulkhead, (b) a 246-foot-long concrete intake section, (c) a 1330-foot-long gated concrete spillway equipped with eighteen 34-foot-wide by 8-foot-high radial lift gates, and seventeen 30-foot-wide by 18-foot-high vertical lift gates, and (d) a 177-foot-long non-overflow concrete bulkhead; (2) an 18-mile-long, 5,880-acre reservoir at normal pool elevation 252 feet m.s.l.; (3) a 300-foot-long concrete powerhouse, housing four 36,000 horse power vertical turbines and generating units, each rated at 25 MW, a total rated capacity of 100 MW, maximum hydraulic capacity of 4,655 cfs each, and total hydraulic capacity of 18,660 cfs. The estimated generation is 148,543 MWh; (4) four trashracks located at the turbine intakes with 4-inch bar spacing; (5) a substation; and (6) other appurtenances. Seven 115-kilovolt transmission lines connect the substation to Alabama Power's transmission system.

Bouldin Development

The Bouldin development consists of: (1) A total of 9,428 feet of water retaining structures which includes a 210-foot-high concrete dam, a powerhouse integrated with the project intake, and two earthen embankments consisting of: (a) A 2,200-foot-long earth embankment left of the intake, (b) a 228-foot-long concrete intake section equipped with three 40-foot-wide by 35.5-foot-high Taintor gates, and (c) a 7,000-foot-long earth embankment right of the intake; (2) a 3-mile-long, 920-acre intake canal at normal pool elevation 252 feet m.s.l.; (3) a 228-foot-long concrete powerhouse, housing three 103,600 horse power propeller-type turbines and generating units, each rated at 75 MW, a total rated capacity of 225 MW, maximum hydraulic capacity of 9,333 cfs each, and total hydraulic capacity of 27,999 cfs. The estimated generation is 822,000 MWh; (4) sixty-three trashracks located at the turbine intakes with 6-inch bar spacing; (5) a substation; and (6) other appurtenances. Four 115-kilovolt transmission lines, which are not part of the project, connect the substation to Alabama Power's transmission system.

n. A copy of the application is available for review at the Commission in the Public Reference Room or may be viewed on the Commission's Web site at *http://www.ferc.gov* using the ''eLibrary'' link. Enter the docket number excluding the last three digits in the docket number field to access the document. For assistance, contact FERC Online Support at *FERCOnlineSupport@ferc.gov* or toll-free at 1–866–208–3676, or for TTY, (202) 502–8659. A copy is also available for inspection and reproduction at the address in item h above.

You may also register online at *http://www.ferc.gov/docs-filing/esubscription.asp* to be notified via e-mail of new filings and issuances related to this or other pending projects. For assistance, contact FERC Online Support.

o. Procedural schedule and final amendments: At this time we do not anticipate the need for preparing a draft environmental assessment (EA). Recipients will have 60 days to provide the Commission with any written comments on the EA. All comments filed with the Commission will be considered in the Order taking final action on the license applications. However, should substantive comments requiring re-analysis be received on the EA document, we would consider preparing a subsequent EA document. The application will be processed according to the following Hydro Licensing Schedule. Revisions to the schedule will be made as appropriate.

Issue Acceptance letter or Deficiency Letter and request Additional Information, if needed—September 2005.

Notice soliciting final terms and conditions—December 2005.

Notice of the Availability of the EA—July 2006.

Ready for Commission's decision on the application—November 2006.

Final amendments to the application must be filed with the Commission no later than 30 days from the issuance date of the notice of ready for environmental analysis.

Linda Mitry,

Deputy Secretary.

[FR Doc. E5–4471 Filed 8–16–05; 8:45 am]

BILLING CODE 6717–01–P

DEPARTMENT OF ENERGY

Federal Energy Regulatory Commission

[Docket Nos. ER05–1097–000, ER05–1097–001]

BJ Energy LLC; Notice of Issuance of Order

August 11, 2005.

BJ Energy LLC (BJ Energy) filed an application for market-based rate authority, with an accompanying rate tariff. The proposed rate tariff provides for the sales of capacity, energy and ancillary services at market-based rates. BJ Energy also requested waiver of various Commission regulations. In particular, BJ Energy requested that the Commission grant blanket approval under 18 CFR part 34 of all future issuances of securities and assumptions of liability by BJ Energy.

On August 11, 2005, pursuant to delegated authority, the Director, Division of Tariffs and Market Development—South, granted the request for blanket approval under part 34. The Director's order also stated that the Commission would publish a separate notice in the **Federal Register** establishing a period of time for the filing of protests. Accordingly, any person desiring to be heard or to protest the blanket approval of issuances of securities or assumptions of liability by BJ Energy should file a motion to intervene or protest with the Federal Energy Regulatory Commission, 888 First Street, NE., Washington, DC 20426, in accordance with Rules 211 and 214 of the Commission's Rules of Practice and Procedure. 18 CFR 385.211, 385.214 (2004).

Notice is hereby given that the deadline for filing motions to intervene or protest is September 12, 2005.

Absent a request to be heard in opposition by the deadline above, BJ Energy is authorized to issue securities and assume obligations or liabilities as a guarantor, indorser, surety, or otherwise in respect of any security of another person; provided that such issuance or assumption is for some lawful object within the corporate purposes of BJ Energy, compatible with the public interest, and is reasonably necessary or appropriate for such purposes.

The Commission reserves the right to require a further showing that neither public nor private interests will be adversely affected by continued approval of BJ Energy's issuances of securities or assumptions of liability.

Copies of the full text of the Director's Order are available from the Commission's Public Reference Room, 888 First Street, NE., Washington, DC 20426. The Order may also be viewed on the Commission's Web site at *http://www.ferc.gov,* using the eLibrary link. Enter the docket number excluding the last three digits in the docket number filed to access the document. Comments, protests, and interventions may be filed electronically via the Internet in lieu of paper. See, 18 CFR 385.2001(a)(1)(iii) and the instructions on the Commission's Web site under the ''e-Filing'' link. The Commission strongly encourages electronic filings.

Linda Mitry,

Deputy Secretary.

[FR Doc. E5–4469 Filed 8–16–05; 8:45 am]

BILLING CODE 6717–01–P

DEPARTMENT OF ENERGY

Federal Energy Regulatory Commission

[Docket No. PR05–18–000]

Bridgeline Gas Distribution LLC; Notice of Cost and Revenue Study

August 11, 2005.

Take notice that on August 3, 2005, Bridgeline Gas Distribution LLC (Bridgeline) tendered for filing a cost and revenue study for the 12-month period ended March 31, 2005, in compliance with the Commission Order, issued September 23, 2003, in Docket No. PR02–14–001.

Bridgeline states that copies of the filing were served on parties on the official service list in the above-captioned proceeding.

Any person desiring to intervene or to protest this filing must file in accordance with Rules 211 and 214 of the Commission's Rules of Practice and Procedure (18 CFR 385.211 and 385.214). Protests will be considered by the Commission in determining the appropriate action to be taken, but will not serve to make protestants parties to the proceeding. Any person wishing to become a party must file a notice of intervention or motion to intervene, as appropriate. Such notices, motions, or protests must be filed on or before the date as indicated below. Anyone filing an intervention or protest must serve a copy of that document on the Applicant. Anyone filing an intervention or protest on or before the intervention or protest date need not serve motions to intervene or protests on persons other than the Applicant.

The Commission encourages electronic submission of protests and interventions in lieu of paper using the ''eFiling'' link at *http://www.ferc.gov*. Persons unable to file electronically should submit an original and 14 copies of the protest or intervention to the Federal Energy Regulatory Commission, 888 First Street, NE., Washington, DC 20426.

This filing is accessible on-line at *http://www.ferc.gov*, using the ''eLibrary'' link and is available for review in the Commission's Public Reference Room in Washington, DC. There is an ''eSubscription'' link on the Web site that enables subscribers to receive e-mail notification when a document is added to a subscribed docket(s). For assistance with any FERC Online service, please e-mail *FERCOnlineSupport@ferc.gov*, or call (866) 208–3676 (toll free). For TTY, call (202) 502–8659.

Comment Date: 5 p.m. eastern time September 2, 2005.

Linda Mitry,

Deputy Secretary.

[FR Doc. E5–4473 Filed 8–16–05; 8:45 am]

BILLING CODE 6717–01–P

DEPARTMENT OF ENERGY

Federal Energy Regulatory Commission

[Docket No. CP05–399–000]

CenterPoint Energy Gas Transmission Company; Notice of Application

August 11, 2005.

Take notice that CenterPoint Energy Gas Transmission Company (CEGT), 1111 Louisiana Street, Houston, Texas 77002–5231, filed in Docket No. CP05–399–000 on August 4, 2005, an application pursuant to section 7(b) of the Natural Gas Act (NGA), for authorization for CEGT to abandon, by sale to CenterPoint Energy Field Services, Inc., its Line OT–1–A, consisting of 16,489 feet of 8- and 12-inch diameter pipe and appurtenant facilities located in LeFlore County, Oklahoma. Applicant also requests a determination under section 1(b) of the NGA that upon abandonment the subject facilities will be non-jurisdictional gathering facilities, all as more fully set forth in the application which is on file with the Commission and open to public inspection. This filing may be also viewed on the Web at *http://www.ferc.gov* using the ''eLibrary'' link. Enter the docket number excluding the last three digits in the docket number field to access the document. For assistance, call (202) 502–8659 or TTY, (202) 208–3676.

Any questions regarding this application should be directed to Lawrence O. Thomas, Director Rate & Regulatory, CenterPoint Energy Gas Transmission Company, P.O. Box 21734, Shreveport, LA 71151, at (318) 429–2804 (phone) or (318) 429–3133 (fax).

There are two ways to become involved in the Commission's review of this project. First, any person wishing to obtain legal status by becoming a party to the proceedings for this project should, on or before the comment date stated below, file with the Federal Energy Regulatory Commission, 888 First Street, NE., Washington, DC 20426, a motion to intervene in accordance with the requirements of the Commission's Rules of Practice and Procedure (18 CFR 385.214 or 385.211) and the Regulations under the NGA (18 CFR 157.10). A person obtaining party status will be placed on the service list maintained by the Secretary of the Commission and will receive copies of all documents filed by the applicant and by all other parties. A party must submit 14 copies of filings made with the Commission and must mail a copy to the applicant and to every other party in the proceeding. Only parties to the proceeding can ask for court review of Commission orders in the proceeding.

However, a person does not have to intervene in order to have comments considered. The second way to participate is by filing with the Secretary of the Commission, as soon as possible, an original and two copies of comments in support of or in opposition to this project. The Commission will consider these comments in determining the appropriate action to be taken, but the filing of a comment alone will not serve to make the filer a party to the proceeding. The Commission's rules require that persons filing comments in opposition to the project provide copies of their protests only to the party or parties directly involved in the protest.

Persons who wish to comment only on the environmental review of this project should submit an original and two copies of their comments to the Secretary of the Commission. Environmental commenters will be placed on the Commission's environmental mailing list, will receive copies of the environmental documents, and will be notified of meetings associated with the Commission's environmental review process. Environmental commenters will not be required to serve copies of filed documents on all other parties. However, the non-party commenters will not receive copies of all documents filed by other parties or issued by the Commission (except for the mailing of environmental documents issued by the Commission) and will not have the right to seek court review of the Commission's final order.

Comments, protests and interventions may be filed electronically via the Internet in lieu of paper. See, 18 CFR 385.2001(a)(1)(iii) and the instructions on the Commission's Web site under the ''e-Filing'' link.

Comment Date: 5 p.m. eastern time on September 1, 2005.

Linda Mitry,

Deputy Secretary.

[FR Doc. E5–4468 Filed 8–16–05; 8:45 am]

BILLING CODE 6717–01–P

DEPARTMENT OF ENERGY

Federal Energy Regulatory Commission

[Docket No. RP04–428–002]

Dominion Cove Point LNG, LP; Notice of Compliance Filing

August 11, 2005.

Take notice that on August 5, 2005, Dominion Cove Point LNG, LP (Cove Point) tendered for filing a compliance filing pursuant to the Commission's Order on Technical Conference issued on July 6, 2005, (112 FERC ¶ 61,046).

Cove Point states that copies of the filing were served on parties on the official service list.

Any person desiring to protest this filing must file in accordance with Rule 211 of the Commission's Rules of Practice and Procedure (18 CFR 385.211). Protests to this filing will be considered by the Commission in determining the appropriate action to be taken, but will not serve to make protestants parties to the proceeding. Such protests must be filed in accordance with the provisions of Section 154.210 of the Commission's regulations (18 CFR 154.210). Anyone filing a protest must serve a copy of that document on all the parties to the proceeding.

The Commission encourages electronic submission of protests in lieu of paper using the ''eFiling'' link at *http://www.ferc.gov.* Persons unable to file electronically should submit an original and 14 copies of the protest to the Federal Energy Regulatory Commission, 888 First Street, NE., Washington, DC 20426.

This filing is accessible on-line at *http://www.ferc.gov,* using the ''eLibrary'' link and is available for review in the Commission's Public Reference Room in Washington, DC. There is an ''eSubscription'' link on the Web site that enables subscribers to receive e-mail notification when a document is added to a subscribed docket(s). For assistance with any FERC Online service, please e-mail *FERCOnlineSupport@ferc.gov,* or call (866) 208–3676 (toll free). For TTY, call (202) 502–8659.

Linda Mitry,

Deputy Secretary.

[FR Doc. E5–4475 Filed 8–16–05; 8:45 am]

BILLING CODE 6717–01–P

DEPARTMENT OF ENERGY

Federal Energy Regulatory Commission

[Docket No. RP04–428–003]

Dominion Cove Point LNG, LP; Notice of Compliance Filing

August 11, 2005.

Take notice that on August 5, 2005, Dominion Cove Point LNG, LP (Cove Point) submitted a compliance filing regarding inventory transfers pursuant to the Commission's ''Order On Technical Conference'' issued July 6, 2005 in Docket No. RP04–428–000.

Cove Point states that copies of the filing were served on parties on the official service list in the above-captioned proceeding.

Any person desiring to protest this filing must file in accordance with Rule 211 of the Commission's Rules of Practice and Procedure (18 CFR 385.211). Protests to this filing will be considered by the Commission in determining the appropriate action to be taken, but will not serve to make protestants parties to the proceeding. Such protests must be filed in accordance with the provisions of Section 154.210 of the Commission's regulations (18 CFR 154.210). Anyone filing a protest must serve a copy of that document on all the parties to the proceeding.

The Commission encourages electronic submission of protests in lieu of paper using the ''eFiling'' link at *http://www.ferc.gov.* Persons unable to file electronically should submit an original and 14 copies of the protest to the Federal Energy Regulatory Commission, 888 First Street, NE., Washington, DC 20426.

This filing is accessible on-line at *http://www.ferc.gov,* using the ''eLibrary'' link and is available for review in the Commission's Public Reference Room in Washington, DC. There is an ''eSubscription'' link on the Web site that enables subscribers to receive e-mail notification when a document is added to a subscribed docket(s). For assistance with any FERC Online service, please e-mail *FERCOnlineSupport@ferc.gov,* or call (866) 208–3676 (toll free). For TTY, call (202) 502–8659.

Linda Mitry,

Deputy Secretary.

[FR Doc. E5–4476 Filed 8–16–05; 8:45 am]

BILLING CODE 6717–01–P

DEPARTMENT OF ENERGY

Federal Energy Regulatory Commission

[Docket No. RP05–502–001]

Dominion Transmission, Inc.; Notice of Refund Report

August 11, 2005.

Take notice that on August 10, 2005 Transcontinental Gas Pipe Line Corporation (Transco) filed a report reflecting the flow through of refunds received from Dominion Transmission, Inc. (Dominion) in Docket No. RP05–502–000.

Any person desiring to protest this filing must file in accordance with Rule 211 of the Commission's Rules of Practice and Procedure (18 CFR 385.211). Protests to this filing will be considered by the Commission in determining the appropriate action to be taken, but will not serve to make protestants parties to the proceeding. Such protests must be filed on or before the date as indicated below. Anyone filing a protest must serve a copy of that document on all the parties to the proceeding.

The Commission encourages electronic submission of protests in lieu of paper using the ''eFiling'' link at *http://www.ferc.gov.* Persons unable to file electronically should submit an original and 14 copies of the protest to the Federal Energy Regulatory Commission, 888 First Street, NE., Washington, DC 20426.

This filing is accessible on-line at *http://www.ferc.gov,* using the ''eLibrary'' link and is available for review in the Commission's Public Reference Room in Washington, DC. There is an ''eSubscription'' link on the Web site that enables subscribers to receive e-mail notification when a document is added to a subscribed docket(s). For assistance with any FERC Online service, please e-mail *FERCOnlineSupport@ferc.gov,* or call (866) 208–3676 (toll free). For TTY, call (202) 502–8659.

Comment Date: 5 p.m. eastern time on August 18, 2005.

Linda Mitry,

Deputy Secretary.

[FR Doc. E5–4480 Filed 8–16–05; 8:45 am]

BILLING CODE 6717–01–P

DEPARTMENT OF ENERGY

Federal Energy Regulatory Commission

[Docket No. RP05–51–002]

Dominion Transmission, Inc.; Notice of Compliance Filing

August 11, 2005.

Take notice that on August 5, 2005, Dominion Transmission, Inc. (DTI) submitted a compliance filing pursuant to the Commission's Letter Order issued on July 26, 2005 (112 FERC ¶ 61,139).

DTI states that copies of the filing were served on parties on the official service list.

Any person desiring to protest this filing must file in accordance with Rule 211 of the Commission's Rules of Practice and Procedure (18 CFR 385.211). Protests to this filing will be considered by the Commission in determining the appropriate action to be taken, but will not serve to make protestants parties to the proceeding. Such protests must be filed in accordance with the provisions of Section 154.210 of the Commission's regulations (18 CFR 154.210). Anyone filing a protest must serve a copy of that document on all the parties to the proceeding.

The Commission encourages electronic submission of protests in lieu of paper using the ''eFiling'' link at *http://www.ferc.gov*. Persons unable to file electronically should submit an original and 14 copies of the protest to the Federal Energy Regulatory Commission, 888 First Street, NE., Washington, DC 20426.

This filing is accessible on-line at *http://www.ferc.gov*, using the ''eLibrary'' link and is available for review in the Commission's Public Reference Room in Washington, DC. There is an ''eSubscription'' link on the Web site that enables subscribers to receive e-mail notification when a document is added to a subscribed docket(s). For assistance with any FERC Online service, please e-mail *FERCOnlineSupport@ferc.gov*, or call (866) 208–3676 (toll free). For TTY, call (202) 502–8659.

Linda Mitry,

Deputy Secretary.

[FR Doc. E5–4481 Filed 8–16–05; 8:45 am]

BILLING CODE 6717–01–P

DEPARTMENT OF ENERGY

Federal Energy Regulatory Commission

[Docket Nos. ER05–1099–000, ER05–1099–001, ER05–1099–002]

E Minus Energy Corporation; Notice of Issuance Of Order

August 11, 2005.

E Minus Energy Corporation (E Minus Energy) filed an application for market-based rate authority, with an accompanying rate schedule. The proposed rate schedule provides for the sales of capacity and energy at market-based rates. E Minus Energy also requested waiver of various Commission regulations. In particular, E Minus Energy requested that the Commission grant blanket approval under 18 CFR part 34 of all future issuances of securities and assumptions of liability by E Minus Energy.

On August 11, 2005, pursuant to delegated authority, the Director, Division of Tariffs and Market Development—South, granted the request for blanket approval under part 34. The Director's order also stated that the Commission would publish a separate notice in the **Federal Register** establishing a period of time for the filing of protests. Accordingly, any person desiring to be heard or to protest the blanket approval of issuances of securities or assumptions of liability by E Minus Energy should file a motion to intervene or protest with the Federal Energy Regulatory Commission, 888 First Street, NE., Washington, DC 20426, in accordance with Rules 211 and 214 of the Commission's Rules of Practice and Procedure. 18 CFR 385.211, 385.214 (2004).

Notice is hereby given that the deadline for filing motions to intervene or protest is September 12, 2005.

Absent a request to be heard in opposition by the deadline above, E Minus Energy is authorized to issue securities and assume obligations or liabilities as a guarantor, indorser, surety, or otherwise in respect of any security of another person; provided that such issuance or assumption is for some lawful object within the corporate purposes of E Minus Energy, compatible with the public interest, and is reasonably necessary or appropriate for such purposes.

The Commission reserves the right to require a further showing that neither public nor private interests will be adversely affected by continued approval of E Minus Energy's issuances of securities or assumptions of liability.

Copies of the full text of the Director's Order are available from the Commission's Public Reference Room, 888 First Street, NE., Washington, DC 20426. The Order may also be viewed on the Commission's Web site at *http://www.ferc.gov*, using the eLibrary link. Enter the docket number excluding the last three digits in the docket number filed to access the document. Comments, protests, and interventions may be filed electronically via the Internet in lieu of paper. See, 18 CFR 385.2001(a)(1)(iii) and the instructions on the Commission's Web site under the ''e-Filing'' link. The Commission strongly encourages electronic filings.

Linda Mitry,

Deputy Secretary.

[FR Doc. E5–4470 Filed 8–16–05; 8:45 am]

BILLING CODE 6717–01–P

DEPARTMENT OF ENERGY

Federal Energy Regulatory Commission

[Docket No. RP05–523–001]

Eastern Shore Natural Gas Company; Notice of Compliance Filing

August 11, 2005.

Take notice that on August 8, 2005, Eastern Shore Natural Gas Company (ESNG) tendered for filing as part of its FERC Gas Tariff, Second Revised Volume No. 1, First Revised Sheet No. 233, with a proposed effective date of September 1, 2005.

ESNG states that copies of the filing have been served upon its affected customers and interested State Commissions.

Any person desiring to protest this filing must file in accordance with Rule 211 of the Commission's Rules of Practice and Procedure (18 CFR 385.211). Protests to this filing will be considered by the Commission in determining the appropriate action to be taken, but will not serve to make protestants parties to the proceeding. Such protests must be filed in accordance with the provisions of Section 154.210 of the Commission's regulations (18 CFR 154.210). Anyone filing a protest must serve a copy of that document on all the parties to the proceeding.

The Commission encourages electronic submission of protests in lieu of paper using the ''eFiling'' link at *http://www.ferc.gov*. Persons unable to file electronically should submit an original and 14 copies of the protest to the Federal Energy Regulatory Commission, 888 First Street, NE., Washington, DC 20426.

This filing is accessible on line at *http://www.ferc.gov*, using the ''eLibrary'' link and is available for review in the Commission's Public Reference Room in Washington, DC. There is an ''eSubscription'' link on the Web site that enables subscribers to receive e-mail notification when a document is added to a subscribed docket(s). For assistance with any FERC Online service, please e-mail *FERCOnlineSupport@ferc.gov*, or call (866) 208–3676 (toll free). For TTY, call (202) 502–8659.

Linda Mitry,

Deputy Secretary.

[FR Doc. E5–4482 Filed 8–16–05; 8:45 am]

BILLING CODE 6717–01–P

DEPARTMENT OF ENERGY

Federal Energy Regulatory Commission

[Docket No. RP05–422–000]

El Paso Natural Gas Company; Notice of Technical Conference

August 11, 2005.

On June 30, 2005, El Paso Natural Gas Company (El Paso) filed revised tariff sheets pursuant to section 4 of the Natural Gas Act and part 154 of the Commission's regulations. In its filing, El Paso proposes a number of new services, a rate increase for existing services, and changes in certain terms and conditions of service. On July 29, 2005, the Commission issued an order [1] accepting and suspending the tariff sheets, subject to refund and conditions, establishing hearing procedures, and establishing a technical conference. In that order, the Commission directed the Staff to convene a technical conference to address certain issues raised by the filing.

Take notice that a technical conference to discuss issues raised by El Paso's filing will be held on Tuesday, September 20, 2005 at 10 a.m. (e.s.t.), in a room to be designated at the offices of the Federal Energy Regulatory Commission, 888 First Street, NE., Washington, DC 20426. The conference will continue through Wednesday, September 21, 2005. An agenda for the conference will be issued in a subsequent notice.

FERC conferences are accessible under section 508 of the Rehabilitation Act of 1973. For accessibility accommodations please send an e-mail

[1] 112 FERC ¶ 61,150 (2005).

to *accessibility@ferc.gov* or call toll free 1–866–208–3372 (voice) or 202–208–1659 (TTY), or send a FAX to 202–208–2106 with the required accommodations.

All parties and staff are permitted to attend.

Linda Mitry,

Deputy Secretary.

[FR Doc. E5–4479 Filed 8–16–05; 8:45 am]

BILLING CODE 6717–01–P

DEPARTMENT OF ENERGY

Federal Energy Regulatory Commission

[Docket No. RP05–164–004]

Equitrans, L.P.; Notice To Place Suspended Tariff Sheets Into Effect

August 11, 2005.

Take notice that on August 9, 2005, Equitrans, L.P. (Equitrans) filed a motion to place into effect certain tariff sheets that have been accepted, but suspended, in Docket No. RP05–164–000. Equitrans states as part of its filing, it has submitted the revised tariff sheets listed on Attachment A incorporating changes directed to be made by the Commission. Equitrans requests an effective date of August 1, 2005 for the listed tariff sheets.

Any person desiring to protest this filing must file in accordance with Rule 211 of the Commission's Rules of Practice and Procedure (18 CFR 385.211). Protests to this filing will be considered by the Commission in determining the appropriate action to be taken, but will not serve to make protestants parties to the proceeding. Such protests must be filed on or before the date as indicated below. Anyone filing a protest must serve a copy of that document on all the parties to the proceeding.

The Commission encourages electronic submission of protests in lieu of paper using the ''eFiling'' link at *http://www.ferc.gov*. Persons unable to file electronically should submit an original and 14 copies of the protest to the Federal Energy Regulatory Commission, 888 First Street, NE., Washington, DC 20426.

This filing is accessible on-line at *http://www.ferc.gov*, using the ''eLibrary'' link and is available for review in the Commission's Public Reference Room in Washington, DC. There is an ''eSubscription'' link on the Web site that enables subscribers to receive e-mail notification when a document is added to a subscribed docket(s). For assistance with any FERC Online service, please email *FERCOnlineSupport@ferc.gov*, or call (866) 208–3676 (toll free). For TTY, call (202) 502–8659.

Comment Date: 5 p.m. eastern time on August 18, 2005.

Linda Mitry,

Deputy Secretary.

[FR Doc. E5–4477 Filed 8–16–05; 8:45 am]

BILLING CODE 6717–01–P

DEPARTMENT OF ENERGY

Federal Energy Regulatory Commission

[Docket No. RP04–171–003]

Portland Natural Gas Transmission System; Notice of Compliance Filing

August 11, 2005.

Take notice that on August 5, 2005, Portland Natural Gas Transmission System (PNGTS) tendered for filing the following revised tariff sheets to its FERC Gas Tariff, Original Volume No. 1, to become effective on April 1, 2004:

Second Revised Sheet No. 201
First Revised Sheet No. 215
Original Sheet No. 215A
Second Substitute Original Sheet No. 219
Original Sheet No. 219A
Second Substitute Original Sheet No. 223
Second Substitute Third Revised Sheet No. 326
Original Sheet No. 326A
Substitute Third Revised Sheet No. 339
Substitute First Revised Sheet No. 571

PNGTS states that the purpose of its filing is to comply with the Commission's Order issued in this proceeding on June 20, 2005, *Portland Natural Gas Transmission Sys.,* 111 FERC ¶ 61,430 (2004), which accepted, subject to certain conditions and modifications, tariff sheets filed by PNGTS on April 9, 2004 to establish a new hourly firm transportation service.

PNGTS states that copies of this filing are being served on all jurisdictional customers and interested state commissions, as well as all persons on the service list for this proceeding.

Any person desiring to protest this filing must file in accordance with Rule 211 of the Commission's Rules of Practice and Procedure (18 CFR 385.211). Protests to this filing will be considered by the Commission in determining the appropriate action to be taken, but will not serve to make protestants parties to the proceeding. Such protests must be filed in accordance with the provisions of Section 154.210 of the Commission's regulations (18 CFR 154.210). Anyone filing a protest must serve a copy of that document on all the parties to the proceeding.

The Commission encourages electronic submission of protests in lieu of paper using the ''eFiling'' link at *http://www.ferc.gov.* Persons unable to file electronically should submit an original and 14 copies of the protest to the Federal Energy Regulatory Commission, 888 First Street, NE., Washington, DC 20426.

This filing is accessible on-line at *http://www.ferc.gov,* using the ''eLibrary'' link and is available for review in the Commission's Public Reference Room in Washington, DC. There is an ''eSubscription'' link on the Web site that enables subscribers to receive e-mail notification when a document is added to a subscribed docket(s). For assistance with any FERC Online service, please e-mail *FERCOnlineSupport@ferc.gov,* or call (866) 208–3676 (toll free). For TTY, call (202) 502–8659.

Linda Mitry,

Deputy Secretary.

[FR Doc. E5–4474 Filed 8–16–05; 8:45 am]

BILLING CODE 6717–01–P

DEPARTMENT OF ENERGY

Federal Energy Regulatory Commission

[Docket No. RP05–399–001]

Viking Gas Transmission Company; Notice of Compliance Filing

August 11, 2005.

Take notice that on August 5, 2005, Viking Gas Transmission Company (Viking) tendered for filing gas price index information to comply with the Commission's Letter Order issued on July 22, 2005, in Docket No. RP05–399–000.

Any person desiring to protest this filing must file in accordance with Rule 211 of the Commission's Rules of Practice and Procedure (18 CFR 385.211). Protests to this filing will be considered by the Commission in determining the appropriate action to be taken, but will not serve to make protestants parties to the proceeding. Such protests must be filed on or before the date as indicated below. Anyone filing a protest must serve a copy of that document on all the parties to the proceeding.

The Commission encourages electronic submission of protests in lieu of paper using the ''eFiling'' link at *http://www.ferc.gov.* Persons unable to file electronically should submit an original and 14 copies of the protest to

the Federal Energy Regulatory Commission, 888 First Street, NE., Washington, DC 20426.

This filing is accessible on-line at *http://www.ferc.gov,* using the ''eLibrary'' link and is available for review in the Commission's Public Reference Room in Washington, DC. There is an ''eSubscription'' link on the Web site that enables subscribers to receive e-mail notification when a document is added to a subscribed docket(s). For assistance with any FERC Online service, please e-mail *FERCOnlineSupport@ferc.gov,* or call (866) 208–3676 (toll free). For TTY, call (202) 502–8659.

Comment Date: 5 p.m. eastern time on August 18, 2005.

Linda Mitry,

Deputy Secretary.

[FR Doc. E5–4478 Filed 8–16–05; 8:45 am]

BILLING CODE 6717–01–P

DEPARTMENT OF ENERGY

Federal Energy Regulatory Commission

[Docket No. EF05–5171–000]

United States Department of Energy; Western Area Power Administration; Notice of Filing

August 11, 2005.

Take notice that on August 1, 2005, the Deputy Secretary of the Department of Energy, by Rate Order No. WAPA–117, did confirm and approve on an interim basis, to be effective on October 1, 2005, Rate Schedule SLIP–F8 placing firm power rates for the Salt Lake City Area Integrated Projects of the Western Area Power Administration into effect on an interim basis. The provisional rates in Rate Schedule SLIP–F8 will be in effect pending the Federal Energy Regulatory Commission's approval of these or of substitute rates on a final basis through September 30, 2010.

Any person desiring to intervene or to protest this filing must file in accordance with Rules 211 and 214 of the Commission's Rules of Practice and Procedure (18 CFR 385.211, 385.214). Protests will be considered by the Commission in determining the appropriate action to be taken, but will not serve to make protestants parties to the proceeding. Any person wishing to become a party must file a notice of intervention or motion to intervene, as appropriate. Such notices, motions, or protests must be filed on or before the comment date. Anyone filing a motion to intervene or protest must serve a copy of that document on the Applicant and all the parties in this proceeding.

The Commission encourages electronic submission of protests and interventions in lieu of paper using the ''eFiling'' link at *http://www.ferc.gov*. Persons unable to file electronically should submit an original and 14 copies of the protest or intervention to the Federal Energy Regulatory Commission, 888 First Street, NE., Washington, DC 20426.

This filing is accessible on-line at *http://www.ferc.gov*, using the ''eLibrary'' link and is available for review in the Commission's Public Reference Room in Washington, DC. There is an ''eSubscription'' link on the Web site that enables subscribers to receive e-mail notification when a document is added to a subscribed docket(s). For assistance with any FERC Online service, please e-mail *FERCOnlineSupport@ferc.gov*, or call (866) 208–3676 (toll free). For TTY, call (202) 502–8659.

Comment Date: 5 p.m. Eastern Time on August 25, 2005.

Linda Mitry,

Deputy Secretary.

[FR Doc. E5–4466 Filed 8–16–05; 8:45 am]

BILLING CODE 6717–01–P

DEPARTMENT OF ENERGY

Federal Energy Regulatory Commission

[Docket No. NJ05–1–001]

Western Area Power Administration; Notice of Compliance Filing

August 11, 2005.

Take notice that on August 4, 2005, Western Area Power Administration submitted revisions to its amended non-jurisdictional open access transmission tariff in compliance with the Commission's Order issued July 6, 2005 in Docket No. NJ05–1–000, 112 FERC ¶ 61,044.

Any person desiring to intervene or to protest this filing must file in accordance with Rules 211 and 214 of the Commission's Rules of Practice and Procedure (18 CFR 385.211, 385.214). Protests will be considered by the Commission in determining the appropriate action to be taken, but will not serve to make protestants parties to the proceeding. Any person wishing to become a party must file a notice of intervention or motion to intervene, as appropriate. Such notices, motions, or protests must be filed on or before the comment date. Anyone filing a motion to intervene or protest must serve a copy of that document on the Applicant and all the parties in this proceeding.

The Commission encourages electronic submission of protests and interventions in lieu of paper using the ''eFiling'' link at *http://www.ferc.gov*. Persons unable to file electronically should submit an original and 14 copies of the protest or intervention to the Federal Energy Regulatory Commission, 888 First Street, NE., Washington, DC 20426.

This filing is accessible on-line at *http://www.ferc.gov,* using the ''eLibrary'' link and is available for review in the Commission's Public Reference Room in Washington, DC. There is an ''eSubscription'' link on the web site that enables subscribers to receive e-mail notification when a document is added to a subscribed docket(s). For assistance with any FERC Online service, please e-mail *FERCOnlineSupport@ferc.gov,* or call (866) 208–3676 (toll free). For TTY, call (202) 502–8659.

Comment Date: 5 p.m. Eastern Time on August 25, 2005.

Linda Mitry,

Deputy Secretary.

[FR Doc. E5–4467 Filed 8–16–05; 8:45 am]

BILLING CODE 6717–01–P

DEPARTMENT OF ENERGY

Federal Energy Regulatory Commission

Combined Notice of Filings #1

August 11, 2005.

Take notice that the Commission received the following electric rate filings.

Docket Numbers: ER95–1007–019.

Applicants: Logan Generating Company, LP.

Description: Logan Generating Company, LP submits a notification of a change in status.

Filed Date: 08/03/2005.

Accession Number: 20050805–0278.

Comment Date: 5 p.m. eastern time on Wednesday, August 24, 2005.

Docket Numbers: ER99–754–012; EL05–132–000.

Applicants: AmerGen Energy Company, LLC.

Description: AmerGen Energy Company, LLC submits an amendment to its market-based rate tariffs adding a Statement of Policy and Code of Conduct with respect to the relationship between AmerGen and the Public Service Electric and Gas Company.

Filed Date: 08/04/2005.

Accession Number: 20050808–0209.

Comment Date: 5 p.m. eastern time on Thursday, August 25, 2005.

Docket Numbers: ER00–3251–010; EL05–132–000.

Applicants: Exelon Generation Company, LLC.

Description: Exelon Generation Company, LLC submits an amendment to its market-based tariffs adding a Statement of Policy and Code of Conduct with respect to the relationship between Exelon and Public Service Electric and Gas Company.

Filed Date: 08/04/2005.

Accession Number: 20050808–0207.

Comment Date: 5 p.m. eastern time on Thursday, August 25, 2005.

Docket Numbers: ER01–1919–007; EL01–132–000.

Applicants: Exelon Energy Company.

Description: Exelon Energy Company submits an amendment to its market-based tariffs adding a Statement of Policy and Code of Conduct with respect to the relationship between Exelon and Public Service Electric and Gas Company.

Filed Date: 08/04/2005.

Accession Number: 20050808–0208.

Comment Date: 5 p.m. eastern time on Thursday, August 25, 2005.

Docket Numbers: ER01–2460–004; ER01–2482–004.

Applicants: PSEG Lawrenceburg Energy Company LLC; PSEG Waterford Energy LLC.

Description: PSEG Lawrenceburg Energy Co, LLC submits revised tariff sheets in compliance with the Commission's order issued 7/5/05 in Docket No. ER01–2460–002, *et al.*

Filed Date: 08/03/2005.

Accession Number: 20050805–0152.

Comment Date: 5 p.m. eastern time on Wednesday, August 24, 2005.

Docket Numbers: ER02–41–007.

Applicants: North Western Energy Marketing, LLC.

Description: NorthWestern Energy Marketing, LLC submits First Revised Sheet Nos. 1 and 4 of its FERC Electric Tariff, First Revised Volume No. 1, in compliance with the Commission's order issued 7/2/05 in Docket No. ER03–329–006 and ER02–41–006.

Filed Date: 08/04/2005.

Accession Number: 20050805–0269.

Comment Date: 5 p.m. eastern time on Thursday, August 25, 2005.

Docket Numbers: ER02–246–003; ER98–1992–003.

Applicants: Boston Edison Company; Cambridge Electric Light Company; Commonwealth Electric Company; Medical Area Total Energy Plant, Inc.

Description: Boston Edison Company, Cambridge Electric Light Company, Commonwealth Electric Company and Medical Area Total Energy Plant, Inc. submit an updated market power analysis and revised market-based rate tariffs.

Filed Date: 08/01/2005.

Accession Number: 20050805–0280.

Comment Date: 5 p.m. eastern time on Monday, August 22, 2005.

Docket Numbers: ER03–329–007.

Applicants: NorthWestern Energy.

Description: NorthWestern Corporation d/b/a NorthWestern Energy submits Original Sheet Nos. 1 through 6 of its FERC Electric Tariff, Third Revised Volume 6, in compliance with the Commission's Order issued 7/2/05 in Docket Nos. ER03–329–006 and ER02–41–006.

Filed Date: 08/04/2005.

Accession Number: 20050805–0267.

Comment Date: 5 p.m. eastern time on Thursday, August 25, 2005.

Docket Numbers: ER05–1014–002; ER98–3184–010; ER00–494–003.

Applicants: TransAlta Energy Marketing (US) Inc.; TranAlta Centralia Generation LLC.

Description: TransAlta Energy Marketing (US) Inc. and TransAlta Centralia Generator LLC submit amendments to its 5/24/05 filing in Docket No. ER05–1014–001, *et al.*

Filed Date: 08/03/2005.

Accession Number: 20050805–0154.

Comment Date: 5 p.m. eastern time on Wednesday, August 24, 2005.

Docket Numbers: ER05–1284–000.

Applicants: Pacific Gas & Electric Company.

Description: Pacific Gas and Electric Co. submits proposed rate changes for wholesale and retail electric transmission rates shown in Appendices I, II and III of its Transmission Owner Tariff.

Filed Date: 08/01/2005.

Accession Number: 20050809–0211.

Comment Date: 5 p.m. eastern time on Monday, August 22, 2005.

Docket Numbers: ER05–1287–000.

Applicants: Southern California Edison Company.

Description: Southern California Edison Company submits the Inland Empire Energy Center Generation Tie-Line Facilities Agreement and the Interconnection Facilities Agreement with the Inland Empire Energy Center LLC.

Filed Date: 08/03/2005.

Accession Number: 20050805–0170.

Comment Date: 5 p.m. eastern time on Wednesday, August 24, 2005.

Docket Numbers: ER05–1290–000.

Applicants: New York Independent System Operator, Inc.

Description: New York Independent System Operator, Inc. submits proposed revisions to its Open Access Transmission Tariff.

Filed Date: 08/04/2005.

Accession Number: 20050805–0271.

Comment Date: 5 p.m. eastern time on Thursday, August 25, 2005.

Docket Numbers: ER05–1291–000.

Applicants: New York Independent System Operator, Inc.

Description: New York Independent System Operator, Inc. submits proposed revisions to its Market Administration and Control Area Services Tariff.

Filed Date: 08/04/2005.

Accession Number: 20050805–0270.

Comment Date: 5 p.m. eastern time on Thursday, August 25, 2005.

Docket Numbers: ER05–1292–000.

Applicants: PJM Interconnection, L.L.C.

Description: PJM Interconnection, L.L.C. submits an executed interconnection service agreement and executed construction service agreement with Nedpower Mount Storm, LLC and the Potomac Edison Company d/b/a Allegheny Power.

Filed Date: 08/04/2005.

Accession Number: 20050808–0210.

Comment Date: 5 p.m. eastern time on Thursday, August 25, 2005.

Any person desiring to intervene or to protest in any of the above proceedings must file in accordance with Rules 211 and 214 of the Commission's Rules of Practice and Procedure (18 CFR 385.211 and 385.214) on or before 5 p.m. Eastern time on the specified comment date. It is not necessary to separately intervene again in a subdocket related to a compliance filing if you have previously intervened in the same docket. Protests will be considered by the Commission in determining the appropriate action to be taken, but will not serve to make protestants parties to the proceeding. Anyone filing a motion to intervene or protest must serve a copy of that document on the Applicant. In reference to filings initiating a new proceeding, interventions or protests submitted on or before the comment deadline need not be served on persons other and the Applicant.

The Commission encourages electronic submission of protests and interventions in lieu of paper, using the FERC Online links at *http://www.ferc.gov.* To facilitate electronic service, persons with Internet access who will eFile a document and/or be listed as a contact for an intervenor must create and validate an eRegistration account using the eRegistration link. Select the eFiling link to log on and submit the intervention or protests.

Persons unable to file electronically should submit an original and 14 copies

of the intervention or protest to the Federal Energy Regulatory Commission, 888 First St. NE., Washington, DC 20426.

The filings in the above proceedings are accessible in the Commission's eLibrary system by clicking on the appropriate link in the above list. They are also available for review in the Commission's Public Reference Room in Washington, DC. There is an eSubscription link on the Web site that enables subscribers to receive e-mail notification when a document is added to a subscribed dockets(s). For assistance with any FERC Online service, please e-mail *FERCOnlineSupport@ferc.gov.* or call (866) 208–3676 (toll free). For TTY, call (202) 502–8659.

Linda Mitry,

Deputy Secretary.

[FR Doc. E5–4464 Filed 8–16–05; 8:45 am]

BILLING CODE 6717–01–P

DEPARTMENT OF ENERGY

Federal Energy Regulatory Commission

Combined Notice of Filings # 2

August 11, 2005.

Take notice that the Commission received the following electric rate filings:

Docket Numbers: ER99–2156–004.

Applicants: Cordova Energy Company LLC.

Description: Cordova Energy Company LLC reports that neither it nor any of its affiliates owns or operates electric transmission facilities anywhere in the U.S. except those limited facilities that interconnect the generators to the transmission grid and submits revised tariff sheets revising its Market Behavior Rules.

Filed Date: 08/05/2005.

Accession Number: 20050809–0195.

Comment Date: 5 p.m. Eastern Time on Friday, August 26, 2005.

Docket Numbers: ER00–107–004.

Applicants: La Paloma Generating Company, LLC.

Description: La Paloma Generating Company, LLC submits its response to the 7/6/05 deficiency letter issued by the Commission in Docket No. ER00–107–003.

Filed Date: 08/05/2005.

Accession Number: 20050809–0194.

Comment Date: 5 p.m. Eastern Time on Friday, August 26, 2005.

Docket Numbers: ER02–1257–003; ER02–1319–003; ER02–1633–003.

Applicants: Hermiston Power Partnership; Zion Energy LLC; Auburndale Peaker Energy Center L.L.C.

Description: Hermiston Power Partnership, Zion Energy LLC and Auburndale Peaker Energy Center L.L.C. submit a supplement to their joint updated market power analysis filed on 5/3/05 and revised market-based rate tariff sheets.

Filed Date: 08/05/2005.

Accession Number: 20050809–0193.

Comment Date: 5 p.m. Eastern Time on Friday, August 26, 2005.

Docket Numbers: ER04–435–014; ER05–612–001.

Applicants: Southern California Edison Company.

Description: Southern California Edison Company submits revisions to the Wholesale Distribution Access Tariff, pursuant to the Commission's order issued 7/6/05 in Docket Nos. ER04–435–010 and 012, and ER05–612–000.

Filed Date: 08/05/2005.

Accession Number: 20050809–0199.

Comment Date: 5 p.m. Eastern Time on Friday, August 26, 2005.

Docket Numbers: ER05–1225–001.

Applicants: New York Industrial Energy Buyers, LLC.

Description: New York Industrial Energy Buyers, LLC resubmits its entire market-based rate tariff filed on 7/19/05 with modifications to include the requirement to report changes of status and the Market Behavior rules.

Filed Date: 08/05/2005.

Accession Number: 20050809–0192.

Comment Date: 5 p.m. Eastern Time on Friday, August 26, 2005.

Docket Numbers: ER05–1226–001.

Applicants: New York Commercial Energy Buyers, LLC.

Description: New York Commerical Energy Buyers, LLC resubmits its entire market-based rate tariff filed on 7/19/05 with modifications to include the requirement to report changes of status and the Market Behavior Rules.

Filed Date: 08/05/2005.

Accession Number: 20050809–0191.

Comment Date: 5 p.m. Eastern Time on Friday, August 26, 2005.

Docket Numbers: ER05–1293–000.

Applicants: Carolina Power & Light Company; Florida Power Corporation.

Description: Progress Energy Service Company, LLC, on behalf of Carolina Power & Light Company (CP&L) and Florida Power Corporation (FPC), submits revised tariff sheets to CP&L's and FPC's open access transmission tariff.

Filed Date: 08/05/2005.

Accession Number: 20050809–0186.

Comment Date: 5 p.m. Eastern Time on Friday, August 26, 2005.

Docket Numbers: ER05–1294–000.

Applicants: MidAmerican Energy Company.

Description: MidAmerican Energy Co. submits a notice of cancellation of its Rate Schedule No. 21, an agreement with the Electric and Water Utility Board of the City of Eldridge, Iowa.

Filed Date: 08/05/2005.

Accession Number: 20050809–0187.

Comment Date: 5 p.m. Eastern Time on Friday, August 26, 2005.

Docket Numbers: ER05–1295–000.

Applicants: Midwest Independent Transmission System Operator, Inc.

Description: Midwest Independent Transmission System Operator, Inc. (Midwest ISO) submits an Interconnection and Operating Agreement among Windom Transmission Project LLC, the Midwest ISO and Interstate Power and Light Company.

Filed Date: 08/05/2005.

Accession Number: 20050809–0188.

Comment Date: 5 p.m. Eastern Time on Friday, August 26, 2005.

Docket Numbers: ER05–1296–000.

Applicants: New York Independent System Operator, Inc.

Description: New York Independent System Operator, Inc. and the New York Transmission Owners submit revisions to Attachment X of NYISO's open access transmission tariff.

Filed Date: 08/05/2005.

Accession Number: 20050809–0189.

Comment Date: 5 p.m. Eastern Time on Friday, August 26, 2005.

Docket Numbers: ER05–1297–000.

Applicants: Cleco Power LLC.

Description: Cleco Power LLC submits pro forma revisions to Attachment K of its open access transmission tariff.

Filed Date: 08/05/2005.

Accession Number: 20050809–0190.

Comment Date: 5 p.m. Eastern Time on Friday, August 26, 2005.

Docket Numbers: ER05–1298–000.

Applicants: Portland General Electric Company.

Description: Portland General Electric Co. submits revisions to its pro forma open access transmission tariff.

Filed Date: 08/05/2005.

Accession Number: 20050809–0184.

Comment Date: 5 p.m. Eastern Time on Friday, August 26, 2005.

Any person desiring to intervene or to protest in any of the above proceedings must file in accordance with Rules 211 and 214 of the Commission's Rules of Practice and Procedure (18 CFR 385.211 and 385.214) on or before 5 p.m. Eastern Time on the specified comment date. It is not necessary to separately intervene again in a subdocket related to a

compliance filing if you have previously intervened in the same docket. Protests will be considered by the Commission in determining the appropriate action to be taken, but will not serve to make protestants parties to the proceeding. Anyone filing a motion to intervene or protest must serve a copy of that document on the Applicant. In reference to filings initiating a new proceeding, interventions or protests submitted on or before the comment deadline need not be served on persons other and the Applicant.

The Commission encourages electronic submission of protests and interventions in lieu of paper, using the FERC Online links at *http://www.ferc.gov*. To facilitate electronic service, persons with Internet access who will eFile a document and/or be listed as a contact for an intervenor must create and validate an eRegistration account using the eRegistration link. Select the eFiling link to log on and submit the intervention or protests.

Persons unable to file electronically should submit an original and 14 copies of the intervention or protest to the Federal Energy Regulatory Commission, 888 First St. NE., Washington, DC 20426.

The filings in the above proceedings are accessible in the Commission's eLibrary system by clicking on the appropriate link in the above list. They are also available for review in the Commission's Public Reference Room in Washington, DC. There is an eSubscription link on the web site that enables subscribers to receive e-mail notification when a document is added to a subscribed docket(s). For assistance with any FERC Online service, please e-mail *FERCOnlineSupport@ferc.gov.* or call (866) 208–3676 (toll free). For TTY, call (202) 502–8659.

Linda Mitry,

Deputy Secretary.

[FR Doc. E5–4465 Filed 8–16–05; 8:45 am]

BILLING CODE 6717–01–P

DEPARTMENT OF ENERGY

Federal Energy Regulatory Commission

[Project No. 2165–022]

Alabama Power Company; Notice of Application Tendered for Filing With the Commission, and Establishing Procedural Schedule for Relicensing and a Deadline for Submission of Final Amendments

August 11, 2005.

Take notice that the following hydroelectric application has been filed with the Commission and is available for public inspection.

a. *Type of Application:* New Major License.

b. *Project No.:* P–2165–022.

c. *Date Filed:* July 28, 2005.

d. *Applicant:* Alabama Power Company.

e. *Name of Project:* Warrior River Hydroelectric Project, which includes the Lewis Smith and Bankhead Developments.

f. *Location:* The Lewis Smith development is located in northwestern Alabama in the headwaters of the Black Warrior River on the Sipsey Fork in Cullman, Walker, and Winston Counties. The Bankhead development is located in central Alabama downstream of the Lewis Smith development, on the Black Warrior River in Tuscaloosa County. The Lewis Smith development affects 2691.44 acres of federal lands and the Bankhead development affects 18.7 acres of Federal lands.

g. *Filed Pursuant to:* Federal Power Act 16 U.S.C. 791 (a)–825(r).

h. *Applicant Contact:* Mr. Jerry L. Stewart, Senior Vice President and Senior Production Officer, Alabama Power Company, 600 North 18th Street, P.O. Box 2641, Birmingham, AL 35291–8180.

i. *FERC Contact:* Janet Hutzel, (202) 502–8675 or *janet.hutzel@ferc.gov*.

j. *Cooperating agencies:* We are asking Federal, State, local, and tribal agencies with jurisdiction and/or special expertise with respect to environmental issues to cooperate with us in the preparation of the environmental document. Agencies who would like to request cooperating status should follow the instructions for filing such requests described in item k below.

k. *Deadline for request for cooperating agency status:* September 26, 2005.

All documents (original and eight copies) should be filed with: Magalie R. Salas, Secretary, Federal Energy Regulatory Commission, 888 First Street, NE., Washington, DC 20426.

The Commission's Rules of Practice require all intervenors filing documents with the Commission to serve a copy of that document on each person on the official service list for the project. Further, if an intervenor files comments or documents with the Commission relating to the merits of an issue that may affect the responsibilities of a particular resource agency, they must also serve a copy of the document on that resource agency.

Requests for cooperating agency status may be filed electronically via the Internet in lieu of paper. The Commission strongly encourages electronic filings. See 18 CFR 385.2001(a)(1)(iii) and the instructions on the Commission's Web site (*http://www.ferc.gov*) under the ''e-Filing'' link. The Commission strongly encourages electronic filing.

l. This application has not been accepted for filing. We are not soliciting motions to intervene, protests, or final terms and conditions at this time.

m. *Description of Project:* The proposed Warrior River Project would consist of two developments. The Lewis Smith and Bulkhead developments would operate in peaking mode. The total capacity for all developments is 211.05 MW, generating about 463,094 MWh of energy annually. The project works would include the following:

Lewis Smith Development: The Lewis Smith development, located on the Sipsey Fork of the Black Warrior River, consists of: (1) A total of 2,200 feet of water retaining structures which includes a 300-foot-high earth and rock fill dam, an uncontrolled spillway with fixed crest elevation 522 feet m.s.l., and powerhouse consisting of: (a) A 95-foot-long uncontrolled spillway, (b) a 350-foot-wide channel which originates at the spillway and discharges into Mill creek about 3,000 feet downstream of the spillway, (c) a concrete intake located 120 feet upstream of the dam which provides flows to two 23-foot-diameter, 630-foot-long power tunnels; (2) a 35-mile-long, 21,200-acre reservoir at normal pool elevation 510 feet m.s.l., and capacity of 1,390,000 acre-ft at normal pool elevation 510 feet m.s.l. and 1,670,600 acre-feet at spillway crest elevation 522-ft m.s.l; (3) a 193-foot-long concrete power house, housing two 111,500 horse power vertical fixed-blade turbines and generating units, each rated at 78.75 MW, a total rated capacity of 157.5 MW, maximum hydraulic capacity of 5,700 cfs each, and total hydraulic capacity of 11,400 cfs. The estimated generation is 282,864 MWh.; (4) trashracks located at the turbine intakes with 6-inch bar spacing; (5) a substation; and (6) other appurtenances. One 115-kilovolt transmission line, and two 161-kilovolt

transmission lines connect substations to Alabama Power's transmission system.

Bankhead Development: The Bankhead development is located at the U.S. Army Corps of Engineers (Corps) Lock and Dam No. 17 on the Black Warrior River. The dam, a 1,230-foot-long gated spillway, and 78-mile-long reservoir are owned and operated by the Corps. The Bankhead development consists of a powerhouse and intake canal consisting of: (1) A 54-foot-wide by 100-foot-long gated intake canal; (2) a 135-foot-long powerhouse housing one 71,400 horse power vertical propeller turbine and generating unit, rated at 53.985 MW, and a maximum hydraulic capacity of 10,388 cfs. The estimated generation is 180,230 MWh; (3) thirty-five trashracks located at the turbine intakes with 6-inch bar spacing; (4) penstocks; (5) a substation; and (6) other appurtenances. One 115-kilovolt transmission line connects the substation to Alabama Power's transmission system.

n. A copy of the application is available for review at the Commission in the Public Reference Room or may be viewed on the Commission's Web site at *http://www.ferc.gov* using the ''eLibrary'' link. Enter the docket number excluding the last three digits in the docket number field to access the document. For assistance, contact FERC Online Support at *FERCOnlineSupport@ferc.gov* or toll-free at 1–866–208–3676, or for TTY, (202) 502–8659. A copy is also available for inspection and reproduction at the address in item h above.

You may also register online at *http://www.ferc.gov/docs-filing/esubscription.asp* to be notified via e-mail of new filings and issuances related to this or other pending projects. For assistance, contact FERC Online Support.

o. *Procedural schedule and final amendments:* At this time we do not anticipate the need for preparing a draft environmental assessment (EA). Recipients will have 60 days to provide the Commission with any written comments on the EA. All comments filed with the Commission will be considered in the Order taking final action on the license applications. However, should substantive comments requiring re-analysis be received on the EA document, we would consider preparing a subsequent EA document. The application will be processed according to the following Hydro Licensing Schedule. Revisions to the schedule will be made as appropriate.

Issue acceptance letter or deficiency letter and request additional information, if needed: September 2005.

Notice soliciting final terms and conditions: December 2005.

Notice of the availability of the EA: July 2006.

Ready for Commission's decision on the application: November 2006.

Final amendments to the application must be filed with the Commission no later than 30 days from the issuance date of the notice of ready for environmental analysis.

Linda Mitry,

Deputy Secretary.

[FR Doc. E5–4472 Filed 8–16–05; 8:45 am]

BILLING CODE 6717–01–P

ENVIRONMENTAL PROTECTION AGENCY

[OPPT–2005–0029; FRL–7732–2]

Third Preparatory Committee Meeting on the Strategic Approach to International Chemicals Management; Notice of Public Meeting

AGENCY: Environmental Protection Agency (EPA).

ACTION: Notice.

SUMMARY: This notice announces that EPA and the State Department are hosting a meeting for stakeholders to inform the development of the U.S. Government's viewpoints for the upcoming 3rd Preparatory Committee (PrepComm 3) meeting on the Strategic Approach to International Chemicals Management (SAICM) and a number of updates to the inter-sessional working documents. Comments are being sought to help provide guidance to U.S. Government Agencies as to how they should work with other countries to develop a SAICM that promotes the sound management of chemicals while facilitating the movement of chemicals and their products across borders without compromising human health or the environment. There are several updates to the inter-sessional working documents that will serve as a basis for the structural development of a SAICM. This meeting will serve as an opportunity for stakeholders to share their views on these documents before they are finalized at the third and final session of the PrepComm on SAICM in the third week of September 2005.

DATES: The meeting will be held on Wednesday, August 31, 2005, from 1 to 3 p.m.

ADDRESSES: The meeting will be held at 1201 Constitution Ave., NW., Rm. 1153, EPA East (1st Floor), Washington, DC.

Requests to participate in the meeting may be submitted to the technical person listed under **FOR FURTHER INFORMATION CONTACT**.

FOR FURTHER INFORMATION CONTACT: *For general information contact*: Colby Lintner, Regulatory Coordinator, Environmental Assistance Division (7408M), Office of Pollution Prevention and Toxics, Environmental Protection Agency, 1200 Pennsylvania Ave., NW., Washington, DC 20460–0001; telephone number: (202) 554–1404; e-mail address: *TSCA-Hotline@epa.gov*.

For technical information contact: John Shoaff, OPPT International Team Leader, Environmental Assistance Division (7408M), Office of Pollution Prevention and Toxics (OPPT), Environmental Protection Agency, 1200 Pennsylvania Ave., NW., Washington, DC 20460–0001; telephone number: (202) 564–0531; e-mail address: *shoaff.john@epa.gov*.

SUPPLEMENTARY INFORMATION:

I. General Information

A. Does this Action Apply to Me?

This action is directed to the public in general, and may be of particular interest to industry, trade associations, and non-governmental organizations that deal with and are interested in international chemicals management. If you have any questions regarding the applicability of this action to a particular entity, consult the technical person listed under **FOR FURTHER INFORMATION CONTACT**.

B. How Can I Get Copies of this Document and Other Related Information?

1. *Docket*. EPA has established an official public docket for this action under docket identification (ID) number OPPT–2005–0029. The official public docket consists of the documents specifically referenced in this action, any public comments received, and other information related to this action. Although a part of the official docket, the public docket does not include Confidential Business Information (CBI) or other information whose disclosure is restricted by statute. The official public docket is the collection of materials that is available for public viewing at the EPA Docket Center, Rm. B102-Reading Room, EPA West, 1301 Constitution Ave., NW., Washington, DC. The EPA Docket Center is open from 8:30 a.m. to 4:30 p.m., Monday through Friday, excluding legal holidays. The EPA Docket Center Reading Room telephone number is (202) 566–1744, and the telephone number for the OPPT Docket,

which is located in EPA Docket Center, is (202) 566–0280.

2. *Electronic access*. You may access this **Federal Register** document electronically through the EPA Internet under the ''**Federal Register**'' listings at *http://www.epa.gov/fedrgstr/*.

An electronic version of the public docket is available through EPA's electronic public docket and comment system, EPA Dockets. You may use EPA Dockets at *http://www.epa.gov/edocket/* to submit or view public comments, access the index listing of the contents of the official public docket, and to access those documents in the public docket that are available electronically. Although not all docket materials may be available electronically, you may still access any of the publicly available docket materials through the docket facility identified in Unit I.B.1. Once in the system, select ''search,'' then key in the appropriate docket ID number.

II. Background

An agenda will be available 2 weeks prior to the meeting. Inter-sessional working documents are available at *http://www.chem.unep.ch/saicm/meeting/intsession/default.htm*. For general and background information on SAICM, see *http://www.chem.unep.ch/saicm/default.htm*. The meeting is open to the public.

III. How Can I Request to Participate in this Meeting?

You may submit a request to participate in this meeting to the technical person listed under **FOR FURTHER INFORMATION CONTACT**. Do not submit any information in your request that is considered CBI.

List of Subjects

Environmental protection, Chemicals, Hazardous materials transportation, Hazardous substances, Public health, Safety.

Dated: August 11, 2005.

Wendy C. Hamnett,

Acting Director, Office of Pollution Prevention and Toxics.

[FR Doc. 05–16299 Filed 8–16–05; 8:45 am]

BILLING CODE 6560–50–S

ENVIRONMENTAL PROTECTION AGENCY

[OPP–2005–0061; FRL–7733–3]

Azinphos-methyl; Notice of Receipt of Requests to Voluntarily Amend to Terminate Uses of Certain Pesticide Registrations

AGENCY: Environmental Protection Agency (EPA).

ACTION: Notice.

SUMMARY: In accordance with section 6(f)(1) of the Federal Insecticide, Fungicide, and Rodenticide Act (FIFRA), as amended, EPA is issuing a notice of receipt of requests by registrants to amend their registrations to terminate certain uses of end-use products containing the pesticide azinphos-methyl. The requests would terminate azinphos-methyl use in or on caneberries, cotton, cranberries, peaches/nectarines, potatoes, and Southern pine seed orchards. EPA intends to grant these requests at the close of the comment period for this notice unless, based on substantive comments received during the comment period or other relevant information, the Agency determines that the requests merit further review. Upon granting these requests, any sale, distribution, or use of products listed in this notice will be permitted only if such sale, distribution, or use is consistent with the terms as described in the final order. A companion notice, announcing the order to amend registrations of azinphos-methyl manufacturing-use products to terminate these same uses, is published elsewhere in this **Federal Register**. The existing stocks provision proposed in this notice for end-use products reflects and is compatible with the modified schedule for terminating uses on the manufacturing-use products.

DATES: Comments must be received on or before September 16, 2005.

ADDRESSES: Comments, identified by docket identification (ID) number OPP–2005–0061, may be submitted electronically, by mail, or through hand delivery/courier. Follow the detailed instructions as provided in Unit I. of the **SUPPLEMENTARY INFORMATION**.

FOR FURTHER INFORMATION CONTACT: Diane Isbell, Special Review and Reregistration Division (7508C), Office of Pesticide Programs, Environmental Protection Agency, 1200 Pennsylvania Ave., NW., Washington, DC 20460–0001; telephone number: (703) 308–8154; fax number: (703) 308–8041; e-mail address: *isbell.diane@epa.gov*.

SUPPLEMENTARY INFORMATION:

I. General Information

A. Does this Action Apply to Me?

This action is directed to the public in general, and may be of interest to a wide range of stakeholders including environmental, human health, and agricultural advocates; the chemical industry; pesticide users; and members of the public interested in the sale, distribution, or use of pesticides. Since others also may be interested, the Agency has not attempted to describe all the specific entities that may be affected by this action. If you have any questions regarding the applicability of this action to a particular entity, consult the person listed under **FOR FURTHER INFORMATION CONTACT**.

B. How Can I Get Copies of this Document and Other Related Information?

1. *Docket*. EPA has established an official public docket for this action under docket ID number OPP–2005–0061. The official public docket consists of the documents specifically referenced in this action, any public comments received, and other information related to this action. Although a part of the official docket, the public docket does not include Confidential Business Information (CBI) or other information whose disclosure is restricted by statute. The official public docket is the collection of materials that is available for public viewing at the Public Information and Records Integrity Branch (PIRIB), Rm. 119, Crystal Mall #2, 1801 S. Bell St., Arlington, VA. This docket facility is open from 8:30 a.m. to 4 p.m., Monday through Friday, excluding legal holidays. The docket telephone number is (703) 305–5805.

2. *Electronic access*. You may access this **Federal Register** document electronically through the EPA Internet under the ''**Federal Register**'' listings at *http://www.epa.gov/fedrgstr/*.

An electronic version of the public docket is available through EPA's electronic public docket and comment system, EPA Dockets. You may use EPA Dockets at *http://www.epa.gov/edocket/* to submit or view public comments, access the index listing of the contents of the official public docket, and to access those documents in the public docket that are available electronically. Once in the system, select ''search,'' then key in the appropriate docket ID number.

Certain types of information will not be placed in the EPA Dockets. Information claimed as CBI and other information whose disclosure is restricted by statute, which is not included in the official public docket,

will not be available for public viewing in EPA's electronic public docket. EPA's policy is that copyrighted material will not be placed in EPA's electronic public docket but will be available only in printed, paper form in the official public docket. To the extent feasible, publicly available docket materials will be made available in EPA's electronic public docket. When a document is selected from the index list in EPA Dockets, the system will identify whether the document is available for viewing in EPA's electronic public docket. Although not all docket materials may be available electronically, you may still access any of the publicly available docket materials through the docket facility identified in Unit I.B.1. EPA intends to work towards providing electronic access to all of the publicly available docket materials through EPA's electronic public docket.

For public commenters, it is important to note that EPA's policy is that public comments, whether submitted electronically or in paper, will be made available for public viewing in EPA's electronic public docket as EPA receives them and without change, unless the comment contains copyrighted material, CBI, or other information whose disclosure is restricted by statute. When EPA identifies a comment containing copyrighted material, EPA will provide a reference to that material in the version of the comment that is placed in EPA's electronic public docket. The entire printed comment, including the copyrighted material, will be available in the public docket.

Public comments submitted on computer disks that are mailed or delivered to the docket will be transferred to EPA's electronic public docket. Public comments that are mailed or delivered to the docket will be scanned and placed in EPA's electronic public docket. Where practical, physical objects will be photographed, and the photograph will be placed in EPA's electronic public docket along with a brief description written by the docket staff.

C. How and to Whom Do I Submit Comments?

You may submit comments electronically, by mail, or through hand delivery/courier. To ensure proper receipt by EPA, identify the appropriate docket ID number in the subject line on the first page of your comment. Please ensure that your comments are submitted within the specified comment period. Comments received after the close of the comment period will be marked ''late.'' EPA is not required to consider these late comments. If you wish to submit CBI or information that is otherwise protected by statute, please follow the instructions in Unit I.D. Do not use EPA Dockets or e-mail to submit CBI or information protected by statute.

1. *Electronically*. If you submit an electronic comment as prescribed in this unit, EPA recommends that you include your name, mailing address, and an e-mail address or other contact information in the body of your comment. Also include this contact information on the outside of any disk or CD ROM you submit, and in any cover letter accompanying the disk or CD ROM. This ensures that you can be identified as the submitter of the comment and allows EPA to contact you in case EPA cannot read your comment due to technical difficulties or needs further information on the substance of your comment. EPA's policy is that EPA will not edit your comment, and any identifying or contact information provided in the body of a comment will be included as part of the comment that is placed in the official public docket, and made available in EPA's electronic public docket. If EPA cannot read your comment due to technical difficulties and cannot contact you for clarification, EPA may not be able to consider your comment.

i. *EPA Dockets*. Your use of EPA's electronic public docket to submit comments to EPA electronically is EPA's preferred method for receiving comments. Go directly to EPA Dockets at *http://www.epa.gov/edocket/*, and follow the online instructions for submitting comments. Once in the system, select ''search,'' and then key in docket ID number OPP–2005–0061. The system is an ''anonymous access'' system, which means EPA will not know your identity, e-mail address, or other contact information unless you provide it in the body of your comment.

ii. *E-mail*. Comments may be sent by e-mail to *opp-docket@epa.gov*, Attention: Docket ID Number OPP–2005–0061. In contrast to EPA's electronic public docket, EPA's e-mail system is not an ''anonymous access'' system. If you send an e-mail comment directly to the docket without going through EPA's electronic public docket, EPA's e-mail system automatically captures your e-mail address. E-mail addresses that are automatically captured by EPA's e-mail system are included as part of the comment that is placed in the official public docket, and made available in EPA's electronic public docket.

iii. *Disk or CD ROM*. You may submit comments on a disk or CD ROM that you mail to the mailing address identified in Unit I.C.2. These electronic submissions will be accepted in WordPerfect or ASCII file format. Avoid the use of special characters and any form of encryption.

2. *By mail*. Send your comments to: Public Information and Records Integrity Branch (PIRIB) (7502C), Office of Pesticide Programs (OPP), Environmental Protection Agency, 1200 Pennsylvania Ave., NW., Washington, DC 20460–0001, Attention: Docket ID Number OPP–2005–0061.

3. *By hand delivery or courier*. Deliver your comments to: Public Information and Records Integrity Branch (PIRIB), Office of Pesticide Programs (OPP), Environmental Protection Agency, Rm. 119, Crystal Mall #2, 1801 S. Bell St., Arlington, VA, Attention: Docket ID Number OPP–2005–0061. Such deliveries are only accepted during the docket's normal hours of operation as identified in Unit I.B.1.

D. How Should I Submit CBI to the Agency?

Do not submit information that you consider to be CBI electronically through EPA's electronic public docket or by e-mail. You may claim information that you submit to EPA as CBI by marking any part or all of that information as CBI (if you submit CBI on disk or CD ROM, mark the outside of the disk or CD ROM as CBI and then identify electronically within the disk or CD ROM the specific information that is CBI). Information so marked will not be disclosed except in accordance with procedures set forth in 40 CFR part 2.

In addition to one complete version of the comment that includes any information claimed as CBI, a copy of the comment that does not contain the information claimed as CBI must be submitted for inclusion in the public docket and EPA's electronic public docket. If you submit the copy that does not contain CBI on disk or CD ROM, mark the outside of the disk or CD ROM clearly that it does not contain CBI. Information not marked as CBI will be included in the public docket and EPA's electronic public docket without prior notice. If you have any questions about CBI or the procedures for claiming CBI, please consult the person listed under **FOR FURTHER INFORMATION CONTACT**.

E. What Should I Consider as I Prepare My Comments for EPA?

You may find the following suggestions helpful for preparing your comments:

1. Explain your views as clearly as possible.

2. Describe any assumptions that you used.

3. Provide any technical information and/or data you used that support your views.

4. If you estimate potential burden or costs, explain how you arrived at your estimate.

5. Provide specific examples to illustrate your concerns.

6. Offer alternatives.

7. Make sure to submit your comments by the comment period deadline identified.

8. To ensure proper receipt by EPA, identify the appropriate docket ID number in the subject line on the first page of your response. It would also be helpful if you provided the name, date, and **Federal Register** citation related to your comments.

II. Background on the Receipt of Requests to Amend Registrations to Terminate Uses

This notice announces receipt by EPA of requests from registrants Bayer CropScience, Gowan Company, Makhteshim Chemical Works, and Microflo Company to amend azinphos-methyl end-use product labels to terminate use on caneberries, cotton, cranberries, peaches/nectarines, potatoes, and Southern pine seed orchards from the registrations listed in Table 1. of Unit III.

Azinphos-methyl is an organophosphate insecticide first registered in 1959, and is used in agriculture on berries, nuts, orchard fruits, and other crops. The Interim Reregistration Eligibility Decision (IRED) for azinphos-methyl was issued in October 2001. The notice of availability of the interim risk management decision documents was published in the **Federal Register** issue of November 28, 2001 (66 FR 59419) (FRL–6813–9). During the development of the IRED, EPA evaluated the risks and benefits associated with azinphos-methyl use, considered all relevant risk mitigation options and implemented a variety of mitigation measures, including reductions in the rate and frequency of applications and precautionary labeling to reduce risks. Despite these mitigation measures, calculated risks to workers and the environment from azinphos-methyl use still indicated potential concerns. The technical registrants of azinphos-methyl entered into a Memorandum of Agreement (MOA) with EPA that was signed on May 23, 2002. The MOA implemented the IRED decision by dividing the universe of azinphos-methyl uses into three groups. Group 1 contained 23 crops with little usage that were deleted immediately. Group 2 consists of the 7 uses that are the subject of this notice: Caneberries, cotton, cranberries, peaches/nectarines, potatoes, and Southern pine seed orchards which were to be phased-out by December 31, 2005. Group 3 is comprised of 10 uses which have time-limited registrations pending the submission and evaluation of biomonitoring, product efficacy, and other data. Group 3 includes: Almonds; apples; blueberries, lowbush and highbush; brussel sprouts; cherries, sweet and tart; crab apples; nursery stock; parsley; pears; pistachios; and walnuts.

EPA published in the **Federal Register** issue of February 28, 2005 (70 FR 9644) (FRL–7702–5) a notice that announced the receipt of requests to terminate use of azinphos-methyl on the Group 2 crops listed in this unit on manufacturing-use products. EPA received comments and requests to extend these uses from the U.S. Department of Agriculture (USDA), Ohio Farm Bureau, researchers, and commodity groups. EPA has evaluated these requests along with other comments received in response to the February 28, 2005 notice. The order to amend manufacturing-use product registrations to terminate Group 2 uses is published elsewhere in this **Federal Register**.

In letters dated May 5, 2005, May 27, 2005, May 31, 2005, and June 16, 2005, Bayer CropScience, Gowan Company, and Makhteshim Chemical Works, and Microflo Company requested that EPA amend the affected registrations to terminate Group 2 uses of azinphos-methyl end-use products identified in Tables 1 and 2 of Unit III.

III. What Action is the Agency Taking?

In accordance with the 2002 MOA and section 6(f) of FIFRA, this notice announces receipt by EPA of requests from registrants to amend to terminate uses of azinphos-methyl end-use product registrations. The affected products and the registrants making the requests are identified in Tables 1 and 2 of this unit.

Under section 6(f)(1)(A) of FIFRA, registrants may request, at any time, that their pesticide registrations be canceled or amended to terminate one or more pesticide uses. Section 6(f)(1)(B) of FIFRA requires that before acting on a request for voluntary cancellation, EPA must provide a 30–day public comment period on the request for use termination. In addition, section 6(f)(1)(C) of FIFRA requires that EPA provide a 180–day comment period on a request for voluntary cancellation or termination of any minor agricultural use before granting the request, unless:

1. The registrants request a waiver of the comment period, or

2. The Administrator determines that continued use of the pesticide would pose an unreasonable adverse effect on the environment.

The azinphos-methyl registrants have requested that EPA waive the 180–day comment period. EPA will provide a 30–day comment period on the proposed requests. Thereafter, following the public comment period, the Administrator may approve such a request. An order will be issued amending the affected registrations.

TABLE 1.—AZINPHOS-METHYL PRODUCT REGISTRATIONS WITH PENDING REQUESTS FOR AMENDMENT

Registration No.	Product name	Company
264–733	Guithion Solupak 50% Wettable Powder Insecticide	Bayer Cropscience
10163–78 10163–138 10163–139 10163–180	Gowan Azinphos-M 50 WSB Gowan Azinphos-M 35 WP Gowan Azinphos-M 35 WSB Gowan Azinphos 50 PVA	Gowan Company
66222–11	Cotnion-Methyl Azinphos-methyl 50W	Makhteshim Chemical Works
51036–164	Azinphos-methyl 50W	Microflo Company

Table 2 of this unit includes the names and addresses of record for the registrants of the products listed in Table 1 of this unit.

TABLE 2.—REGISTRANTS REQUESTING AMENDMENTS

EPA Company No.	Company name and address
264	Bayer Cropscience 2 T.W. Alexander Dr. Research Triangle Park, NC 27709
10163	Gowan Company P.O. Box 5569 Yuma, AZ 85366–5569
66222	Makhteshim Chemical Works 4515 Falls of Neuse Rd., Suite 300 Raleigh, NC 27609
51036	Microflo Company 530 Oak Court Dr. Memphis, TN 38117

IV. What is the Agency's Authority for Taking this Action?

Section 6(f)(1) of FIFRA provides that a registrant of a pesticide product may at any time request that any of its pesticide registrations be canceled or amended to terminate one or more uses. FIFRA further provides that, before acting on the request, EPA must publish a notice of receipt of any such request in the **Federal Register**. Thereafter, following the public comment period, the Administrator may approve such a request.

V. Provisions for Disposition of Existing Stocks

Existing stocks are those stocks of registered pesticide products which are currently in the United States and which were packaged, labeled, and released for shipment prior to the effective date of the cancellation action.

In any order issued in response to these requests for amendments to terminate uses, the Agency proposes to include the following provisions for the treatment of any existing stocks of the azinphos-methyl end-use products identified in Table 1 of Unit III: The distribution or sale of these products is permitted until March 31, 2006. The use of existing stocks of these products in the United States is permitted until September 30, 2006.

Section III.B.3. of the 2002 MOA provides for extension of sale and distribution of existing stocks of end-use products by an equal period of time if EPA issues the termination order after August 31, 2005. EPA will not be issuing the order by August 31, 2005, but proposes to issue any such order on or before March 31, 2006. As a result, distribution or sale of existing stocks of end-use products, pursuant to the 2002 MOA, will also be extended to March 31, 2006. EPA is proposing September 30, 2006, as a stop use date for existing stocks of these end-use products to avoid difficulties and confusion to growers that could result from a mid-use-season existing stocks date. The existing stocks dates proposed in this notice for end-use products are compatible with those established for the corresponding manufacturing-use products in the order to amend manufacturing-use registrations published elsewhere in this **Federal Register**.

If the request for use termination is granted, the Agency intends to publish the cancellation order in the **Federal Register**.

List of Subjects

Environmental protection, Pesticides and pests.

Dated: August 11, 2005.

Debra Edwards,

Director, Special Review and Reregistration Division, Office of Pesticide Programs.

[FR Doc. 05–16295 Filed 8–16–05; 8:45 am]

BILLING CODE 6560–50–S

ENVIRONMENTAL PROTECTION AGENCY

[OPP–2005–0061; FRL–7733–2]

Azinphos-methyl; Order to Amend Registrations to Terminate Certain Uses

AGENCY: Environmental Protection Agency (EPA).

ACTION: Notice.

SUMMARY: This notice announces the order to amend registrations to terminate certain uses, voluntarily requested by the registrants and accepted by the Agency, of manufacturing-use products containing the pesticide azinphos-methyl, pursuant to section 6(f)(1) of the Federal Insecticide, Fungicide, and Rodenticide Act (FIFRA), as amended. This order follows a February 28, 2005 **Federal Register** Notice of Receipt of Requests (70 FR 9644) (FRL–7702–5) from the azinphos-methyl registrants Bayer CropScience, Gowan Company, and Makhteshim Chemical Works to amend manufacturing-use product labels to terminate caneberries, cotton, cranberries, peaches/nectarines, potatoes, and Southern pine seed orchard uses. These are not the last azinphos-methyl products registered for use in the United States.

In the February 28, 2005 notice, EPA indicated that it would issue an order implementing the amendments to terminate uses, unless the Agency received substantive comments within the 30-day comment period that would merit its further review of these requests. The Agency received several substantive comments on the notice. These comments have been reviewed and taken into consideration in the Agency's decision to proceed with this termination order, but modify the previously proposed existing stocks provision. EPA's decision is discussed in Unit III. of this notice. Accordingly, EPA hereby issues in this notice an order to amend the subject registrations to terminate uses. Any distribution, sale, or use of the azinphos-methyl manufacturing-use products subject to this order is permitted only in accordance with the terms of this order, including any existing stocks provisions in Unit VI.

A companion notice, announcing the receipt of requests to voluntarily terminate these same uses of azinphos-methyl end-use products, is being published elsewhere in today's **Federal Register**. The proposed existing stocks provision for the end-use products reflects and is compatible with the modified existing stocks provision for the manufacturing-use products.

DATES: The cancellations are effective August 17, 2005.

FOR FURTHER INFORMATION CONTACT: Diane Isbell, Special Review and Reregistration Division (7508C), Office of Pesticide Programs, Environmental Protection Agency, 1200 Pennsylvania Ave., NW., Washington, DC 20460–0001; telephone number: (703) 308–8154; fax number: (703) 308–8041; e-mail address: *isbell.diane@epa.gov*.

SUPPLEMENTARY INFORMATION:

I. General Information

A. Does this Action Apply to Me?

This action is directed to the public in general, and may be of interest to a wide range of stakeholders including environmental, human health, and agricultural advocates; the chemical industry; pesticide users; and members of the public interested in the sale, distribution, or use of pesticides. Since others also may be interested, the Agency has not attempted to describe all the specific entities that may be affected by this action. If you have any questions regarding the applicability of this action to a particular entity, consult the person listed under **FOR FURTHER INFORMATION CONTACT**.

B. How Can I Get Copies of this Document and Other Related Information?

1. *Docket*. EPA has established an official public docket for this action under docket identification (ID) number OPP–2005–0061. The official public docket consists of the documents specifically referenced in this action, any public comments received, and other information related to this action. Although a part of the official docket, the public docket does not include Confidential Business Information (CBI) or other information whose disclosure is restricted by statute. The official public docket is the collection of materials that is available for public viewing at the Public Information and Records Integrity Branch (PIRIB), Rm. 119, Crystal Mall #2, 1801 S. Bell St., Arlington, VA. This docket facility is open from 8:30 a.m. to 4 p.m., Monday through Friday, excluding legal holidays. The docket telephone number is (703) 305–5805.

2. *Electronic access.* You may access this **Federal Register** document electronically through the EPA Internet under the ''**Federal Register**'' listings at *http://www.epa.gov/fedrgstr/*.

An electronic version of the public docket is available through EPA's electronic public docket and comment system, EPA Dockets. You may use EPA Dockets at *http://www.epa.gov/edocket/* to view public comments, access the index listing of the contents of the official public docket, and to access those documents in the public docket that are available electronically. Although not all docket materials may be available electronically, you may still access any of the publicly available docket materials through the docket facility identified in Unit I.B.1. Once in the system, select ''search,'' then key in the appropriate docket ID number.

II. What Action is the Agency Taking?

This order amends registrations to terminate certain uses (caneberries, cotton, cranberries, peaches/nectarines, potatoes, and Southern pine seed orchards), as requested by the registrants, of azinphos-methyl manufacturing-use products registered under section 3 of FIFRA. These registrations are listed in sequence by registration number in Table 1. of this unit.

TABLE 1.—AZINPHOS-METHYL PRODUCT REGISTRATION AMENDMENTS TO TERMINATE USES

Registration No.	Product Name	Company
264–722	Guthion Technical Insecticide	Bayer CropScience
10163–95	Azinphos-methyl Technical	Gowan Company
11678–53	Cotnion-Methyl	Makhteshim Chemical Works

Table 2. of this unit includes the names and addresses of record for all registrants of the products in Table 1. of this unit, in sequence by EPA company number.

TABLE 2.—REGISTRANTS OF AMENDED AZINPHOS-METHYL PRODUCTS

EPA Company No.	Company Name and Address
264	Bayer CropScience 2 T.W. Alexander Drive Research Triangle Park, North Carolina 27709
10163	Gowan Company P.O. Box 5569 Yuma, Arizona 85366–5569
11678	Makhteshim Chemical Works 4515 Falls of Neuse Road, Suite 300 Raleigh, North Carolina 27609

III. Summary of Public Comments Received and Agency Response to Comments

EPA issued the Interim Reregistration Eligibility Decision (IRED) for azinphos-methyl in October 2001. In May of 2002, the technical registrants of azinphos-methyl signed a Memorandum of Agreement implementing the provisions of the IRED by dividing the universe of azinphos-methyl uses into three groups. Group 1 contained 23 crops with little use that were deleted from product labels immediately. Group 2 consists of the seven uses that are the subject of this order, and were originally scheduled to be phased out in December, 2005. Group 3 is comprised of 10 uses which have time-limited registrations pending the submission and evaluation of biomonitoring, product efficacy, and other data.

For the azinphos-methyl Group 2 crops, the Agency received comments and requests to extend these uses from the United States Department of Agriculture (USDA), the Ohio Farm Bureau, researchers, and commodity groups on the following azinphos-methyl uses: Caneberries, cotton, cranberries, peaches/nectarines, potatoes, and Southern pine seed orchards. A comment was received from the Natural Resources Defense Council opposing any extension of use on these crops. The requests and EPA's responses are summarized in this unit. The original comments and the supporting documents for this order can be found in the electronic docket for azinphos-methyl at *http://www.epa.gov/edocket/*.

For caneberries, the Oregon Raspberry and Blackberry Commission and the Ohio Farm Bureau have requested that EPA eliminate or extend the December 2005 phase-out of azinphos-methyl use on caneberries. The request is based on the need to control the raspberry crown

borer in blackberries and raspberries. Currently, diazinon is the only alternative for controlling this pest. However, there is concern among blackberry growers in Oregon that resistance to diazinon by the raspberry crown borer may occur. They also emphasized that diazinon application is only allowed once per growing season due to restrictions stemming from the Diazinon IRED. They further stated that if azinphos-methyl is removed, growers who face both the raspberry crown borer and another sporadic pest of caneberries, the raspberry fruitworm, may need to dedicate the single application of diazinon for fruitworm control. They claim that in such a situation growers would have no alternative for the crown borer.

The Agency's review found that azinphos-methyl is currently rotated with diazinon to reduce the likelihood of resistance in the raspberry crown borer. EPA believes that resistance is unlikely since the applications are only made every other year, due to the life-cycle of this pest. Moreover, carbaryl and spinosad are both labeled for use against the fruitworm, and the presence of these alternatives should allow growers to use diazinon in place of azinphos-methyl for crown borer control. No new pest pressures have developed since EPA's evaluation of this use in 2001. Therefore, EPA finds insufficient justification for extending azinphos-methyl use on caneberries.

For cotton, the USDA/Animal and Plant Health Inspection Service (APHIS) submitted a late request that the azinphos-methyl use be expanded from the currently labeled use only in Missouri and Texas to allow use in Alabama, Florida, Georgia, Mississippi, North Carolina, South Carolina, Tennessee, and Virginia. The USDA/APHIS requested that ground applications of azinphos-methyl be made only in response to detections of isolated boll weevil reinfestations in cotton for use only in conjunction with the USDA Cooperative Boll Weevil Eradication Program.

This request is beyond the scope of the current action. Use of azinphos-methyl in additional states would, in effect, constitute a new and extended use that would need to be evaluated separately, through the registration process. Therefore, EPA is not extending the azinphos-methyl use on cotton.

The Cranberry Institute has requested an extension of the phase-out of azinphos-methyl use on cranberries in Wisconsin for 2–3 years. The request is based on the need for controlling the cranberry fruitworm. The Agency has completed an evaluation of the azinphos-methyl use on cranberries and concluded that the pest situation remains the same as was considered in EPA's 2001 analysis. There are several other active ingredients, including acephate, carbaryl, chlorpyrifos, diazinon, phosmet, methoxyfenozide, and tebufenozide, registered to control the cranberry fruitworm. Therefore, the Agency finds insufficient justification for extending azinphos-methyl use on cranberries.

EPA, however, acknowledges the current limitations on the use of methoxyfenozide in Wisconsin due to concerns for the endangered Karner Blue butterfly. The Agency is working with stakeholders to better understand the range and habitat of the butterfly in relation to cranberry bogs and develop reasonable, crop-specific measures to protect this species.

For peaches, the Northwest Horticultural Council and researchers from the University of Georgia and Rutgers University have requested that EPA eliminate the phase-out of azinphos-methyl use on peaches. The request is based on the need to control the peach twig borer in the northwest and lesser peach tree borer (LPTB) in the southeast, and the Oriental fruit moth and San Jose scale in the northeast. It is claimed that the LPTB has emerged as a pest since phosmet replaced methyl parathion in the treatment regimen. The other pests listed were evaluated in 2001, and are insects with longstanding pest status in the regions mentioned. Therefore, the Agency focused on the LPTB for assessing the need for continued use of azinphos-methyl on peaches.

The LPTB was once an insect that was only seen in older or diseased trees. This pest has begun attacking productive limbs of younger trees during the growing season as well as overwintering under tree bark. The increased infestation of the LPTB is a newly reemerging problem which makes it difficult for crop experts to accurately determine the extent of the southeastern peach acreage that is affected. It is also not clear whether azinphos-methyl is the only effective option to control these infestations. EPA acknowledges the potential for loss due to the LPTB, however has no evidence to confirm that azinphos-methyl is the best choice for controlling this pest. Therefore, the Agency finds insufficient justification for extending azinphos-methyl use on peaches/nectarines.

For potatoes, the National Potato Council has requested that EPA allow the continued use of azinphos-methyl on potatoes in the Pacific Northwest and expand the use to include Colorado and the Mid-Atlantic region. A request to retain the azinphos-methyl potato use has also been received from the Washington State Potato Commission. The request is based on the need to control the Colorado potato beetle (CPB) and a new pest in the northwest, the tuber moth. The CPB is an insect with longstanding pest status in the regions mentioned. EPA evaluated CPB in 2001 and found several effective alternative insecticides available. Therefore, the Agency focused on the tuber moth for assessing the need for continued use of azinphos-methyl on potatoes.

The pest spectrum has changed since 2001, with the introduction of the potato tuber moth into the Pacific Northwest. However, the Agency finds that effective controls other than azinphos-methyl, including methamidaphos, methomyl and esfenvalerate, are available. Further, usage data indicate that use of azinphos-methyl on potatoes in recent years has been minimal.

The USDA submitted a request to extend the use of azinphos-methyl on Southern pine seed orchards on behalf of the Seed Orchard Pest Management Subcommittee of the Southern Forest Tree Improvement Committee. The request is for use of azinphos-methyl against coneworms and seedbugs, a complex of moth and ''true bug'' species that attack flowers and seeds. The pest spectrum has not changed since azinphos-methyl was evaluated in 2001.

Synthetic pyrethroids are an alternative, although increase reliance on use may increase other pest populations or foster resistance development in the target pests. However, pyrethroids are effective control agents for the short term. In addition, there are other promising alternatives, including indoxacarb, thiamethoxam, and tebufenozide, that, if registered for these uses, would pose less risks to workers and the environment. Therefore, the Agency finds insufficient justification for extending azinphos-methyl use on Southern pine seed orchards.

For these reasons, the Agency does not believe that the comments submitted during the comment period merit any substantial extension of azinphos-methyl use or denial of the requests for voluntary use termination. However, section III.A.2. of the 2002 Memorandum of Agreement allows for extension of sale and distribution of existing stocks of manufacturer use products (MUPs) by an equal period of time if EPA issues the termination order after March 31, 2005. Thus, the Agency will be extending the existing stocks for four and a half months and will be

including use in that extension as well as sale and distribution. The Agency intends to propose extending the use of existing stocks of end-use products through the end of the growing/application season, that being September 30, 2006.

IV. Use Termination Order

Pursuant to FIFRA section 6(f), EPA hereby approves the requested cancellations and amendments to terminate uses of azinphos-methyl registrations identified in Table 1. of Unit II. Accordingly, the Agency orders that the azinphos-methyl product registrations identified in Table 1. of Unit II. are hereby amended to terminate the affected uses. Any distribution, sale, or use of existing stocks of the products identified in Table 1. of Unit II. in a manner inconsistent with any of the Provisions for Disposition of Existing Stocks set forth in Unit VI. will be considered a violation of FIFRA.

V. What is the Agency's Authority for Taking this Action?

Section 6(f)(1) of FIFRA provides that a registrant of a pesticide product may at any time request that any of its pesticide registrations be canceled or amended to terminate one or more uses. FIFRA further provides that, before acting on the request, EPA must publish a notice of receipt of any such request in the **Federal Register**. Thereafter, following the public comment period, the Administrator may approve such a request.

VI. Provisions for Disposition of Existing Stocks

Existing stocks are those stocks of registered pesticide products which are currently in the United States and which were packaged, labeled, and released for shipment prior to the effective date of the cancellation or use termination action. The use termination order issued in this notice includes the following existing stocks provisions.

As of the effective date of this order, existing stocks of the products listed in Table 1. of Unit II., will be permitted to be sold, distributed, or used until January 31, 2006.

List of Subjects

Environmental protection, Pesticides and pests.

Dated: August 11, 2005.

Debra Edwards,

Director, Special Review and Reregistration Division, Office of Pesticide Programs.

[FR Doc. 05–16296 Filed 8–16–05; 8:45 am]

BILLING CODE 6560–50–S

ENVIRONMENTAL PROTECTION AGENCY

[OPP–2005–0222; FRL–7730–1]

Notice of Receipt of Requests to Voluntarily Cancel Certain Pesticide Registrations

AGENCY: Environmental Protection Agency (EPA).

ACTION: Notice.

SUMMARY: In accordance with section 6(f)(1) of the Federal Insecticide, Fungicide, and Rodenticide Act (FIFRA), as amended, EPA is issuing a notice of receipt of request by registrants to voluntarily cancel certain pesticide registrations.

DATES: Unless a request is withdrawn by February 13, 2006, orders will be issued canceling these registrations. The Agency will consider withdrawal requests postmarked no later than February 16, 2006.

FOR FURTHER INFORMATION CONTACT: John Jamula, Information Technology and Resource Management Division (7502C), Office of Pesticide Programs, Environmental Protection Agency, 1200 Pennsylvania Ave., NW., Washington, DC 20460–0001; telephone number: (703) 305-6426; e-mail address:*jamula.john@epa.gov*.

SUPPLEMENTARY INFORMATION:

I. General Information

A. Does this Action Apply to Me?

This action is directed to the public in general. Although this action may be of particular interest to persons who produce or use pesticides, the Agency has not attempted to describe all the specific entities that may be affected by this action. If you have any questions regarding the information in this notice, consult the person listed under **FOR FURTHER INFORMATION CONTACT**.

B. How Can I Get Copies of this Document and Other Related Information?

1. *Docket*. EPA has established an official public docket for this action under docket identification (ID) number OPP–2005–0222. The official public docket consists of the documents specifically referenced in this action, any public comments received, and other information related to this action. Although a part of the official docket, the public docket does not include Confidential Business Information (CBI) or other information whose disclosure is restricted by statute. The official public docket is the collection of materials that is available for public viewing at the Public Information and Records Integrity Branch (PIRIB), Rm. 119, Crystal Mall #2, 1801 S. Bell St., Arlington, VA. This docket facility is open from 8:30 a.m. to 4 p.m., Monday through Friday, excluding legal holidays. The docket telephone number is (703) 305–5805.

2. *Electronic access*. You may access this **Federal Register** document electronically through the EPA Internet under the ''**Federal Register**'' listings at *http://www.epa.gov/fedrgstr/*.

An electronic version of the public docket is available through EPA's electronic public docket and comment system, EPA Dockets. You may use EPA Dockets at *http://www.epa.gov/edocket/* to submit or view public comments, access the index listing of the contents of the official public docket, and to access those documents in the public docket that are available electronically. Although not all docket materials may be available electronically, you may still access any of the publicly available docket materials through the docket facility identified in Unit I.B.1. Once in the system, select ''search,'' then key in the appropriate docket ID number.

II. What Action is the Agency Taking?

This notice announces receipt by the Agency of applications from registrants to cancel 234 pesticide products registered under section 3 or 24(c) of FIFRA. These registrations are listed in sequence by registration number (or company number and 24(c) number) in Table 1 of this unit:

TABLE 1.—REGISTRATIONS WITH PENDING REQUESTS FOR CANCELLATION

Registration no.	Product Name	Chemical Name
000004–00123	Mosquito Beater	Butoxypolypropylene glycol
		Naphthalene

TABLE 1.—REGISTRATIONS WITH PENDING REQUESTS FOR CANCELLATION—Continued

Registration no.	Product Name	Chemical Name
000004–00403	Bonide Rabbit Scat	Ziram
000070–00126	Kill-Ko Thiodan 4 Dust	Endosulfan
000070–00142	Kill-Ko Thiodan Emulsifiable Insecticide	Endosulfan
000070–00166	Kill-Ko 5% Sevin Vegetable Dust for Garden Insects	Carbaryl
000070–00244	Rigo 5% Sevin Bait	Carbaryl
000070–00285	Rigo's Best Sevin Brand Carbaryl Insecticide	Carbaryl
000192–00070	Dexol Sevin 5% Garden Dust	Carbaryl
000192–00074	Dexol Systemic Granules Insecticide	Disulfoton
000192–00119	Systemic House Plant Insecticide	Disulfoton
000192–00126	Dexol Systemic Granules Insect Control	Disulfoton
000192–00164	Dexol Systemic Rose & Flower Care 10-10-10	Disulfoton
000192–00174	Dexol Sevin Liquid Insect Killer	Carbaryl
000228–00249	Riverdale Tomato & Potato Dust or Spray	Sulfuric acid, copper(2+) salt, basic
		Carbaryl
000228–00251	Riverdale 5% Sevin Dust Insecticide	Carbaryl
000239–01513	Ortho Sevin 10 Dust	Carbaryl
000241–00321	Scepter O.T. Herbicide	Benzoic acid, 5-(2-chloro-4-(trifluoromethyl)phenoxy)-2-nitro-, sodium salt
		3-Quinolinecarboxylic acid, 2-(4,5-dihydro-4-methyl-4-(1-methylethyl)-5-oxo-1H-imidazol-2-yl
000264–00312	Sevin Carbaryl 10% Bait Insecticide	Carbaryl
000264–00314	Sevin Brand 50w Carbaryl Insecticide	Carbaryl
000264–00320	Sevin 5% Bait Carbaryl Insecticide	Carbaryl
000264–00321	Sevimol Carbaryl Insecticide	Carbaryl
000264–00422	Sevin Brand 4-Oil ULV Carbaryl Insecticide	Carbaryl
000264–00427	Sevin Brand 4-Oil 41A Carbaryl Insecticide	Carbaryl
000264–00676	Tattoo C	Chlorothalonil
		Propamocarb hydrochloride
000264–00945	Gustafson Flo-Pro IMZ Flowable	Imazalil
000264 CO–02–0009	Gustafson Flo-Pro IMZ Flowable	Imazalil
000264 ID–98–0014	Gustafson Flo-Pro IMZ Flowable	Imazalil
000264 OR–04–0019	Admire 2 Flowable	Imidacloprid
000264 OR–85–0020	Sencor DF 75% Dry Flowable Herbicide	Metribuzin
000264 WA–85–0036	Di-Syston 15% Granular Systemic Insecticide	Disulfoton
000270–00344	Adams Flea and Tick Dust II	Carbaryl
		Piperonyl butoxide
		Pyrethrins

TABLE 1.—REGISTRATIONS WITH PENDING REQUESTS FOR CANCELLATION—Continued

Registration no.	Product Name	Chemical Name
		Silica gel
000270–00361	Mycodex Pet Shampoo with Carbaryl	Carbaryl
000279 CA–86–0035	Thiodan 3 E.C.	Endosulfan
000279 CA–90–0031	Thiodan 3 E.C.	Endosulfan
000279 MT–03–0002	Thiodan 3 EC Insecticide	Endosulfan
000279 MT–03–0003	Thionex 50W Insecticide	Endosulfan
000279 NC–00–0004	Thiodan 3 EC Insecticide	Endosulfan
000352 TX–94–0008	Dupont Velpar Herbicide	Hexazinone
000432–01335	Tempo 2 E	Cyfluthrin
000432 AZ–04–0004	Topchoice	Fipronil
000524–00520	Mon 78095 Herbicide	Glyphosate-isopropylammonium
		Oxyfluorfen
000538–00146	Scotts Pro Grow Ornamental Herbicide I	Oxadiazon
000538–00147	Scotts Pro Grow Ornamental Herbicide III	Oxadiazon
000538–00253	All Purpose Plant Disease Control	Thiophanate-methyl
000655 HI–90–0007	Prentox Diazinon AG500	Diazinon
000707 OR–02–0002	Dithane DF Agricultural Fungicide	Gas cartRidge (as a device for burrowing animal control)
		Mancozeb
000769–00559	Royal Guard 5% Sevin	Carbaryl
000769–00573	Sevin Spray	Carbaryl
000769–00612	R & M Garden and Kennel Dust 10%	Carbaryl
000769–00613	R & M Flea and Tick Powder #5	Carbaryl
		Piperonyl butoxide
		Pyrethrins
000769–00614	R & M Flea and Tick Powder #2	Carbaryl
		Piperonyl butoxide
		Pyrethrins
000769–00642	Smcp Flea Scat	Carbaryl
000769–00647	Smcp Sevin 5% Dust	Carbaryl
000769–00648	Smcp Sevin Insecticide Spray	Carbaryl
000769–00665	Smcp Sevin 10% Dust	Carbaryl
000769–00674	Smcp Industrial Roach & Ant Spray	Propoxur
000769–00689	Smcp Diazinon AG500	Diazinon
000769–00728	Sevin Brand Carbaryl Insecticide 5% Turf Insecticide	Carbaryl
000769–00729	Smcp Sevin 5% Bait Crop Insecticide	Carbaryl
000769–00730	SMCP Sevin 5% Bait Pelletized Insecticide	Carbaryl

TABLE 1.—REGISTRATIONS WITH PENDING REQUESTS FOR CANCELLATION—Continued

Registration no.	Product Name	Chemical Name
000769–00761	B-Gone Industrial & Household Residual Insecticide	Propoxur
000769–00792	Superior B Gone	Propoxur
000769–00817	Propoxur 2% Bait Insecticide	Propoxur
000769–00834	Miller Sevin 50% Wettable Powder	Carbaryl
000769–00835	Miller 1.75% Sevin Dust	Carbaryl
000769–00841	Miller Diazinon Ag Insecticide	Diazinon
000769–00865	Liquid 2 Sevin Brand Carbaryl Insecticide Home & Garden	Carbaryl
000769–00868	Pratt 50% Sevin Carbaryl Wettable Powder	Carbaryl
000769–00883	L2 Sevin Brand Carbaryl Insecticide Home and Garden	Carbaryl
000769–00906	Science 5% Sevin Dust	Carbaryl
000769–00908	Rose Flower & Shrub Systemic Insecticide Granules	Disulfoton
000769–00917	Science Household Insect Bomb	Propoxur
000769–00919	Science Sevin Liquid	Carbaryl
000769–00920	Science Sevin 50W	Carbaryl
000769–00929	Wasp + Hornet Jet Spray	Propoxur
		4,7-Methano-1H-isoindole-1,3(2H)-dione, 2-(2-ethylhexyl)-3a,4,7,7a-tetrahydro-
		Piperonyl butoxide
		Pyrethrins
000769–00935	Wasp and Hornet I	Propoxur
		Piperonyl butoxide
		Pyrethrins
000769–00954	Diazinon 50WP	Diazinon
000769–00970	3.5% Sevin Brand Carbaryl Insecticide Insect Granules	Carbaryl
000769–00977	Carbaryl Insecticide Spray RTU	Carbaryl
000802–00351	Miller's Slug, Snail and Insect Killer Bait	Metaldehyde
		Carbaryl
000829–00131	Sa-50 Brand Sevin 1.75% Dust	Carbaryl
000829–00182	Sa-50 Brand Bait Pellets Kill Land Snails & Slugs	Metaldehyde
		Carbaryl
000829–00262	SA-50 Brand Diazinon AG500 Insecticide	Diazinon
000869–00118	Green Light Sevin 5% Dust	Carbaryl
000869–00119	Green Light Bug & Snail Bait	Metaldehyde
		Carbaryl

TABLE 1.—REGISTRATIONS WITH PENDING REQUESTS FOR CANCELLATION—Continued

Registration no.	Product Name	Chemical Name
000869–00180	Green Light 10% Sevin Dust	Carbaryl
000909–00083	Cooke Slug-N-Snail Granules	Metaldehyde
		Carbaryl
001327–00035	Fulex Thiodan Insecticidal Smoke	Endosulfan
001386–00338	Thiodan Emulsifiable Concentrate	Endosulfan
001386–00599	Unico Diazinon 4 EC (ag)	Diazinon
001677–00156	Lubri-Klenz Plus	N-(coco alkyl)trimethylenediamine
		Alkyl* dimethyl benzyl ammonium chloride *(50%C14, 40%C12, 10%C16)
001812–00411	Du Pont Linuron Flake Technical	Linuron
001812 OR–01–0030	Direx 80DF	Diuron
001812 OR–02–0019	Equus DF	Chlorothalonil
001812 WA–02–0009	Equus DF	Chlorothalonil
001812 WA–99–0034	Direx 80DF	Diuron
002935–00193	Sevin 5 Dust	Carbaryl
002935–00320	Sevin 10 Dust	Carbaryl
002935–00440	Nu-Zone 10ME	Imazalil
004581 ID–00–0012	Penncap-M Microencapsulated Insecticide	Methyl parathion
004581 WA–00–0012	Penncap-M Microencapsulated Insecticide	Methyl parathion
004581 WA–98–0029	Desicate II	Endothall, mono(N,N,-dimethyl alkyl amine) salt
004758–00007	Holiday Kennel Dust	Carbaryl
004758–00032	Holiday Flea & Tick Stop for Dogs and Cats	Butoxypolypropylene glycol
		Carbaryl
		Piperonyl butoxide
		Pyrethrins
004758–00034	Holiday Tick Stop	Butoxypolypropylene glycol
		Carbaryl
		Piperonyl butoxide
		Pyrethrins
004822–00312	Bolt Inspection Size Insect Fogger	4,7-Methano-1H-isoindole-1,3(2H)-dione, 2-(2-ethylhexyl)-3a,4,7,7a-tetrahydro-
		Piperonyl butoxide
		Pyrethrins
005389–00012	Lancer Liquid Sanitizer	Phosphoric acid
		Benzenesulfonic acid, C10-16-alkyl derivs.
005481–00133	Duragon 25% Wettable Powder Systemic Insecticide	Dimethoate
005481–00278	Thiodan 50% Wettable Powder Insecticide	Endosulfan

TABLE 1.—REGISTRATIONS WITH PENDING REQUESTS FOR CANCELLATION—Continued

Registration no.	Product Name	Chemical Name
005481–00296	Thiodan Miscible Insecticide	Endosulfan
005481–00316	Sevin 5 Thiodan 1.5 Dust Insecticide	Carbaryl
		Endosulfan
005481 AZ–99–0001	Dibrom 8 Emulsive	Naled
005481 TX–90–0010	PCNB 2-E Liquid Emulsifiable Concentrate	PCNB
005481 TX–92–0024	PCNB 75% Wettable Powder Soil Fungicide	PCNB
005887–00061	Black Leaf Systemic Insecticide Plus Food 8-12-4	Disulfoton
005887–00065	Black Leaf Giant Roach Traps Kills Roaches	Propoxur
005887–00076	Black Leaf Roach and Ant Killer	Propoxur
		4,7-Methano-1H-isoindole-1,3(2H)-dione, 2-(2-ethylhexyl)-3a,4,7,7a-tetrahydro-
		Piperonyl butoxide
		Pyrethrins
005887–00086	Sevin 50% Wettable Powder	Carbaryl
005887–00102	Black Leaf Liquid Flowable 2 Lb. Sevin	Carbaryl
005887–00170	Black Leaf Snailicide	Metaldehyde
		Carbaryl
005905–00169	Helena Brand 10% Sevin Granules	Carbaryl
005905–00180	Helena Brand 15% Sevin Granules	Carbaryl
006836–00092	Hyamine 2389 - 50%	Methyldodecylbenzyl trimethyl ammonium chloride 80% and methyldodecylxylylene bis(trimethyl
006973–00010	Soilserv Sevin Metaldehyde Bait	Metaldehyde
		Carbaryl
007173 OR–84–0048	Rozol Paraffinized Pellets	Chlorophacinone
007401–00004	Ferti Lome Rose Food containing Systemic Insecticide	Disulfoton
007401–00026	Ferti-Lome Systemic Insecticide Granules	Disulfoton
007401–00213	Hi-Yield Diazinon Ag 500	Diazinon
007401–00235	Ferti-Lome Azalea Evergreen Food	Disulfoton
007401–00316	Hi-Yield Thiodan Garden Dust	Endosulfan
007401–00317	Ferti-Lome Garden Bug Killer	Endosulfan
007401–00323	Hi-Yield Di-Syston Systemic Insecticide Granules	Disulfoton
007501 OK–92–0003	Tops 90	Thiophanate-methyl
007501 OR–90–0027	Vitavax Flowable Fungicide	Carboxin
007969–00077	Galaxy Herbicide	3-Isopropyl-1H-2,1,3-benzothiadiazin-4(3H)-one-2,2-dioxide, sodium salt
		Benzoic acid, 5-(2-chloro-4-(trifluoromethyl)phenoxy)-2-nitro-, sodium salt

TABLE 1.—REGISTRATIONS WITH PENDING REQUESTS FOR CANCELLATION—Continued

Registration no.	Product Name	Chemical Name
007969–00080	Blazer 2S Herbicide	Benzoic acid, 5-(2-chloro-4-(trifluoromethyl)phenoxy)-2-nitro-, sodium salt
007969–00146	Guardsman Herbicide	Atrazine
		Dimethenamid
007969–00168	Conclude Ultra Herbicide	3-Isopropyl-1H-2,1,3-benzothiadiazin-4(3H)-one-2,2-dioxide, sodium salt
		Benzoic acid, 5-(2-chloro-4-(trifluoromethyl)phenoxy)-2-nitro-, sodium salt
		Sethoxydim
007969–00179	Conclude Xact	3-Isopropyl-1H-2,1,3-benzothiadiazin-4(3H)-one-2,2-dioxide, sodium salt
		Benzoic acid, 5-(2-chloro-4-(trifluoromethyl)phenoxy)-2-nitro-, sodium salt
		Sethoxydim
007969 OR–03–0011	Cabrio EG Fungicide	Pyraclostrobin
007969 WA–03–0021	Cabrio EG Fungicide	Pyraclostrobin
008278–00003	Metro Tested All Purpose Bug Bait	Metaldehyde
		Carbaryl
008660–00021	Sta-Green Carbaryl Lawn Insect Control	Carbaryl
008660–00028	Vertagreen Lawn Food 10-5-5 with Sevin Insecticide	Carbaryl
008660–00060	50% Sevin Wettable Powder	Carbaryl
008660–00070	Vertagreen Carbaryl Liquid Concentrate	Carbaryl
008660–00072	Vertagreen 5% Sevin Dust	Carbaryl
008660–00111	Grasshopper and Cutworm Bait 5% Sevin	Carbaryl
008660–00133	Carbaryl 11.7 Liquid Flowable	Carbaryl
008660–00188	Insecticide Granules Formula C	Carbaryl
008660–00234	Vigoro 5% Sevin Dust	Carbaryl
008660–00241	Vigoro Sevin Brand Carbaryl Insecticide 10 & Dust	Carbaryl
009198–00211	Fungo 50 Systemic Turf Fungicide	Thiophanate-methyl
009444–00098	Purge Wasp &Hornet Jet Freeze	Carbaryl
		Piperonyl butoxide
		Pyrethrins
009444–00190	Wasp & Hornet Jet Freeze I	Carbaryl
		Piperonyl butoxide
		Pyrethrins
009779–00074	Riverside 5% Sevin	Carbaryl
009779–00081	Riverside 10% Sevin	Carbaryl
009779–00260	Riverside Carbaryl 4l	Carbaryl

TABLE 1.—REGISTRATIONS WITH PENDING REQUESTS FOR CANCELLATION—Continued

Registration no.	Product Name	Chemical Name
009779–00294	Carbaryl 90 DF	Carbaryl
009779–00330	Asgrow Thirethrin 2 45045	Piperonyl butoxide
		Pyrethrins
		Endosulfan
010163–00098	Gowan Endosulfan 50W	Endosulfan
010163–00100	Gowan Diazinon 4E	Diazinon
010163–00104	Gowan Diazinon 14G	Diazinon
010163–00110	Gowan Endosulfan 3EC	Endosulfan
010163–00116	Gowan Diazinon 5G	Diazinon
010163–00130	Gowan Endosulfan 50 WSB	Endosulfan
010163–00138	Gowan Azinphos M 35 WP	Azinphos-Methyl
010163–00139	Gowan Azinphos-M 35WSB	Azinphos-Methyl
010163–00149	Gibberellic Acid 4%	Gibberellic acid
010163–00180	Gowan Azinphos 50 PVA	Azinphos-Methyl
010163–00223	Gowan Endosulfan Technical	Endosulfan
010163–00234	Dicofol Dust	Dicofol
010163–00247	Flutolanil Technical	Flutolanil
010163–00261	Gowan Dicofol 3-Sulfur 60 Dust	Dicofol
		Sulfur
010163–00263	Gowan Diazinon AG Technical	Diazinon
010163 AZ–93–0012	Gowan Endosulfan 3 EC	Endosulfan
010163 CA–96–0001	Gowan Diazinon 4E	Diazinon
010163 ID–02–0002	Gowan Diazinon 4E	Diazinon
010163 ID–97–0006	Gowan Endosulfan 3EC	Endosulfan
010163 NV–04–0002	Gowan Diazinon 4E	Diazinon
010163 NV–93–0004	Gowan Endosulfan 3EC	Endosulfan
010163 OR–02–0004	Gowan Diazinon 4E	Diazinon
010163 OR–94–0053	Metasystox-R Spray Concentrate	Oxydemeton-methyl
010163 OR–99–0051	Gowan Endosulfan 3EC	Endosulfan
010163 WA–02–0001	Gowan Diazinon 4E	Diazinon
010163 WA–98–0015	Gowan Endosulfan 3EC	Endosulfan
010163 WA–99–0025	Gowan Endosulfan 3EC	Endosulfan
010163 WA–99–0032	Gowan Endosulfan 3EC	Endosulfan
010404–00052	Lesco Pre-M 60 DG Herbicide	Pendimethalin
010404–00074	Lesco Pre-M 60 WP	Pendimethalin
010404–00097	Superstar Plus Mini Fertilizer	Oxadiazon
		Dithiopyr

TABLE 1.—REGISTRATIONS WITH PENDING REQUESTS FOR CANCELLATION—Continued

Registration no.	Product Name	Chemical Name
011474–00070	Sys-Sect	Disulfoton
011656–00020	Coastox Meta Carbaryl 2-4 Snail Pellets	Metaldehyde
		Carbaryl
011715–00020	Speer Bird Spray	4,7-Methano-1H-isoindole-1,3(2H)-dione, 2-(2-ethylhexyl)-3a,4,7,7a-tetrahydro-
		Piperonyl butoxide
		Propylene glycol
		Pyrethrins
		Triethylene glycol
011715–00207	Sudbury Gypsy Moth Spray	Carbaryl
011715–00209	Japanese Beetle Spray	Carbaryl
011715–00210	Lure'em II Fly Attractant	(Z)-9-Tricosene
011715–00214	Attractant Fly Stick	(Z)-9-Tricosene
011715–00229	Sevin Liquid Concentrate Insect Spray	Carbaryl
011715–00250	Elite Extra Strength Flea & Tick Powder II	Carbaryl
		Piperonyl butoxide
		Pyrethrins
		Silica gel
011715–00255	Elite Flea and Tick Powder #5	Carbaryl
		Piperonyl butoxide
		Pyrethrins
011715–00292	Security Brand Big 10 Dust	Carbaryl
011715–00294	Security Brand 5% Sevin Garden Dust	Carbaryl
011715–00346	Security Brand Sevin Spray	Carbaryl
019713–00006	Drexel Atrazine 80 Herbicide	Atrazine
019713–00093	Drexel Ziram 4L	Ziram
019713–00131	Drexel Carbaryl 4 Oil	Carbaryl
019713–00145	Drexel D-264 Plus Captan Seed Protectant	Diazinon
		Captan
019713–00270	Ida Inc. Ziram 4L	Ziram
019713–00322	Seis-Tres 6-3	Methyl parathion
		Parathion
019713–00323	Drexel Parathion 8	Parathion
019713–00324	Ida Seis-Tres 6-3	Methyl parathion
		Parathion
019713–00325	Drexel Parathion 4 EC.	Parathion
019713–00494	Drexel Carbaryl 5% Bait	Carbaryl

TABLE 1.—REGISTRATIONS WITH PENDING REQUESTS FOR CANCELLATION—Continued

Registration no.	Product Name	Chemical Name
019713 ID–98–0002	Drexel Endosulfan 3EC	Endosulfan
019713 OR–97–0004	Drexel Dimethoate 4EC	Dimethoate
019713 WA–96–0017	Drexel Dimethoate 2.67	Dimethoate
019713 WA–96–0031	Drexel Dimethoate 2.67	Dimethoate
019713 WA–97–0005	Drexel Dimethoate 2.67	Dimethoate
019713 WA–97–0006	Drexel Dimethoate 4EC	Dimethoate
019713 WA–98–0009	Drexel Diuron 4L Herbicide	Diuron
019713 WA–98–0017	Drexel Endosulfan 3EC	Endosulfan
028293–00006	Unicorn Flea & Tick Powder for Cats & Dogs	Carbaryl
028293–00008	Unicorn Sevin Dog Dip	Carbaryl
028293–00010	Unicorn Flea & Tick Powder #4	Carbaryl
		Piperonyl butoxide
		Pyrethrins
028293–00018	Unicorn Flea & Tick Powder #2	Carbaryl
028293–00222	Unicorn Carbaryl Insecticide	Carbaryl
028293–00233	Unicorn 6.3% Granular Carbaryl Insecticide	Carbaryl
028293–00235	Unicorn Carbaryl Insecticide 5% Bait	Carbaryl
028293–00237	Unicorn Sevin Brand Carbaryl Insecticide 5% Dust	Carbaryl
028293–00289	Unicorn IGR Pet Spray	Bioallethrin
		2,5-Pyridinedicarboxylic acid, dipropyl ester
		4,7-Methano-1H-isoindole-1,3(2H)-dione, 2-(2-ethylhexyl)-3a,4,7,7a-tetrahydro-
		Piperonyl butoxide
		Permethrin
		Pyriproxyfen
034704–00023	Clean Crop Sevin 5 Bait	Carbaryl
034704–00041	Clean Crop Diazinon Ag500 Insecticide	Diazinon
034704–00230	Diazinon G-14	Diazinon
034704–00231	Diazinon 500-Ag	Diazinon
034704–00350	Sevin 50 Wettable Powder	Carbaryl
034704–00373	Sevin 5 Granular	Carbaryl
034704–00435	Clean Crop Diazinon 50wp Insecticide	Diazinon
034704–00471	Ziram 76W	Ziram
034704–00483	Carbaryl Bait	Carbaryl
034704–00493	Diazinon 5 Granules	Diazinon
034704–00619	Carbaryl 80 WDG	Carbaryl
034704–00818	Methyl Parathion 5E	Methyl parathion

TABLE 1.—REGISTRATIONS WITH PENDING REQUESTS FOR CANCELLATION—Continued

Registration no.	Product Name	Chemical Name
034704–00819	Methyl Parathion 4E	Methyl parathion
034704 HI–92–0006	Diazinon 500-AG	Diazinon
034704 HI–96–0009	Sevin 50 Wettable Powder	Carbaryl
034704 ID–02–0029	Diazinon 500-AG	Diazinon
034704 MA–97–0001	Diazinon G-14	Diazinon
034704 NJ–97–0001	Diazinon G-14	Diazinon
034704 OR–92–0019	Clean Crop Diuron 80 WDG Weed Killer	Diuron
034704 OR–94–0029	Clean Crop Diuron 80 WDG Weed Killer	Diuron
034704 OR–97–0002	Diazinon G-14	Diazinon
034704 VT–92–0001	Diazinon 500-AG	Diazinon
034704 WA–02–0007	Diazinon 500-AG	Diazinon
034704 WA–97–0001	Diazinon G-14	Diazinon
034704 WA–98–0011	Simazine 90 Water Dispersible Granular Herbicide	Simazine
034704 WI–01–0001	Diazinon G-14	Diazinon
034704 WI–98–0003	Diazinon G-14	Diazinon
042057–00039	Morgro Pest Meal	Metaldehyde
		Carbaryl
042057–00051	Morgro Rose Food Plus Systemic	Disulfoton
046515–00036	K Gro Sevin Brand Liquid	Carbaryl
047000–00106	Hopkins Sevin Carbaryl Bait	Carbaryl
047000–00109	Prozap Garden Dust	Carbaryl
047000–00116	Sevin Brand 10% Carbaryl Insecticide Granules	Carbaryl
047000–00117	Sevin Brand 5% Carbaryl Insecticide Bait	Carbaryl
047000–00118	Sevin Brand 10% Carbaryl Insecticide Beetle Bait Granul	Carbaryl
047000–00119	Prozap 5% Carbaryl Insecticide Bait Granules	Carbaryl
048273–00011	Atrazine 4l Herbicide	Atrazine
049585–00004	Sevin Brand Carbaryl Insecticide Garden Dust	Carbaryl
049585–00024	Sevin Plus Multi-Purpose Garden Dust	Carbaryl
		Piperonyl butoxide
		Pyrethrins
		Sulfur
049585–00026	K Gro Sevin Brand Carbaryl Insecticide 10 Dust Formula	Carbaryl
049784–00003	Ritter's Tick & Flea Powder for Dogs & Cats	Carbaryl
051036–00013	Carbaryl 10% Dust	Carbaryl
051036–00048	Carbaryl 5% Dust	Carbaryl

TABLE 1.—REGISTRATIONS WITH PENDING REQUESTS FOR CANCELLATION—Continued

Registration no.	Product Name	Chemical Name
051036–00061	Carbait 5	Carbaryl
051036–00066	Carbaryl 4 Flowable	Carbaryl
051036–00071	Diazinon AG 500	Diazinon
051036–00108	Diazinon 50W	Diazinon
051036–00123	Carbaryl 2 Flowable	Carbaryl
051036–00151	Carbaryl Sprayable	Carbaryl
051036–00158	Micro Flo Atrazine 4FL	Atrazine
051036–00185	Slam	Carbaryl
051036–00204	Adios AG	Indole
		Cinnamaldehyde
		1,2,4-Trimethoxybenzene
		Carbaryl
051036–00210	Adios RTU	Carbaryl
051036–00227	Adios Beetle Bait	Indole
		Cinnamaldehyde
		1,2,4-Trimethoxybenzene
		Carbaryl
051036–00286	Carbait 10%	Carbaryl
051036–00321	Methyl Parathion	Methyl parathion
051036 DE–02–0001	Diazinon 50W	Diazinon
051036 ID–02–0007	Diazinon 50W	Diazinon
051036 TX–01–0012	Diazinon 50W	Diazinon
053883–00041	Martin's 10% Sevin Dust	Carbaryl
053883–00042	Martin's 5% Sevin Dust	Carbaryl
053883–00043	M Martin's Lice Killer contains Sevin	Carbaryl
053883–00108	Methoprene 0.2% G	Methoprene
053883–00109	Methoprene 2.1% Briquet	Methoprene
053883–00110	Methoprene 1.5 G	Methoprene
053883–00112	Methoprene 20% Concentrate	Benzene, 1-(8-methoxy-4,8-dimethyl(nonyl)-4-(1-methylethyl)-
053883–00155	T-Methyl 85 WDG	Thiophanate-methyl
053883–00156	T-Methyl 4.5	Thiophanate-methyl
053883–00176	Sta-Green 10-0-30 Fertilizer + Ronstar	Oxadiazon
053883–00177	Vertagreen Fertilizer with Ronstar	Oxadiazon
056984 CA–80–0157	Diaznon 2 Dust	Diazinon
059639–00052	Valent Sevin Bait (pelleted)	Carbaryl
059639–00060	Sevin Bait (fine)	Carbaryl

TABLE 1.—REGISTRATIONS WITH PENDING REQUESTS FOR CANCELLATION—Continued

Registration no.	Product Name	Chemical Name
059639 OR–97–0007	Orthene 75 WSP (insecticide In A Water Soluble Bag)	Acephate
059639 SD–02–0001	Valor WDG Herbicide	Flumioxazin
059639 SD–03–0003	Gangster V Herbicide	Flumioxazin
059639 WA–96–0025	Orthene 75 WSP (insecticide In A Water Soluble Bag)	Acephate
059905–00008	Flea X-1	Boron sodium oxide (B8Na2O13), tetrahydrate (12280-03-4)
060255 CA–96–0016	Diazinon AG 500 Insecticide	Diazinon
062719–00324	Glypro	Glyphosate-isopropylammonium
062719 CA–94–0001	Lorsban 50W Insecticide In Water Soluble Packets	Chlorpyrifos
062719 OR–00–0028	Goal 2XL Herbicide	Oxyfluorfen
062719 OR–01–0017	Nu-Flow M Seed Treatment Fungicide	Myclobutanil
062719 OR–83–0013	Kerb 50-W Herbicide (in Water Soluble Pouches)	Propyzamide
062719 OR–90–0004	Kerb 50W Herbicide	Propyzamide
062719 OR–95–0030	Eagle	Gas cartRidge (as a device for burrowing animal control)
062719 OR–95–0031	Treflan H.F.P	Trifluralin
062719 OR–96–0036	Goal (r) 2XL Herbicide	Oxyfluorfen
062719 WA–03–0005	Lorsban 50W Insecticide In Water Soluble Packets	Chlorpyrifos
062719 WA–96–0033	Goal (r) 2XL Herbicide	Oxyfluorfen
062719 WA–97–0013	Goal (r) 2XL Herbicide	Oxyfluorfen
062719 WA–99–0035	Goal (r) 2XL Herbicide	Oxyfluorfen
066222–00061	Thiodan Wsb Insecticide	Endosulfan
066222 WI–03–0002	Thiodan 3 EC Insecticide	Endosulfan
067517–00031	General Carbaryl-5 Insecticide	Carbaryl
067760 ID–99–0025	Cheminova Methyl Parathion 4 EC	Methyl parathion
067760 OR–99–0058	Cheminova Methyl Parathion 4 EC	Methyl parathion
067760 WA–00–0004	Cheminova Methyl Parathion 4 EC	Methyl parathion
071368–00027	Nufarm Koril + Atrazine	Bromoxynil octanoate
		Atrazine
071711 CA–04–0016	Courier Insect Growth Regulator	Buprofezin
071949–00010	Sevin 5% Dust	Carbaryl
071949–00011	Sevin 10 Dust	Carbaryl
071949–00012	Ford's 5% Sevin Bait	Carbaryl
073049–00153	Bioresmethrin Technical	Bioresmethrin
073049–00238	Wasp & Hornet Concentrate #1	Carbaryl
		Piperonyl butoxide

TABLE 1.—REGISTRATIONS WITH PENDING REQUESTS FOR CANCELLATION—Continued

Registration no.	Product Name	Chemical Name
		Pyrethrins
073049–00266	Niagara Tetramethrin Nia 18739 Pressurized Insect Killer	Tetramethrin
		Bioresmethrin
073049–00267	Tetramethrin 25.00 Nia 18739 6.00 Wb Concentrate	Tetramethrin
		Bioresmethrin
073049–00268	Tetramethrin 2.50 Nia 18739 0.60 Dwb Concentrate	Tetramethrin
		Bioresmethrin
073049–00292	Bioresmethrin Technical II	Bioresmethrin

Unless a request is withdrawn by the registrant within 180 days of publication of this notice, orders will be issued canceling all of these registrations. Users of these pesticides or anyone else desiring the retention of a registration should contact the applicable registrant directly during this 180-day period.

Table 2 of this unit includes the names and addresses of record for all registrants of the products in Table 1 of this unit, in sequence by EPA company number:

TABLE 2.—REGISTRANTS REQUESTING VOLUNTARY CANCELLATION

EPA Company no.	Company Name and Address
000004	Bonide Products,Inc., 6301 Sutliff Rd., Oriska, NY 13424.
000070	Value Gardens Supply, LIC, d/b/a Garden Value Supply, PO Box 585, Saint Jose, MO 64502.
000192	Value Gardens Supply, LIC, d/b/a Value Gardens Supply, Po Box 585, Saint Jose, MO 64502.
000228	Nufarm Americas Inc., 1333 Burr Ridge Parkway, Suite 125A, Burr Rid, IL 605270866.
000239	The Ortho Business Group, d/b/a The Scotts Co., Po Box 190, Marysvil, OH 43040.
000241	BASF Corp., PO Box 13528, Research Triangle Pa, NC 277093528.
000264	Bayer Cropscience LP, 2 T.W. Alexander Drive, Research Triangle Pa, NC 27709.

TABLE 2.—REGISTRANTS REQUESTING VOLUNTARY CANCELLATION—Continued

EPA Company no.	Company Name and Address
000270	Farnam Companies Inc., PO Box 34820, Phoen, AZ 85067.
000279	FMC Corp. Agricultural Products Group, 1735 Market St., Philadelph, PA 19103.
000352	E.I. Du Pont De Nemours & Co., Inc., Dupont Crop Protection (S300/427), PO Box 30, Newa, DE 197140030.
000432	Bayer Environmental Science, A Business Group of Bayer Cropscience LP, 2 T. W. Alexander Drive, Research Triangle Pa, NC 27709.
000524	Monsanto Co, Agent For: Monsanto Co., 1300 I Street, Nw, Suite 450 E., Washingt, DC 20005.
000538	Scotts Co., The, 14111 Scottslawn Rd, Marysvil, OH 43041.
000655	Prentiss Inc., C.B. 2000, Floral Pa, NY 110012000.
000707	Rohm & Haas Co, Attn: James V. Hagan, 100 Independence Mall W., Philadelph, PA 191062399.
000769	Value Gardens Supply, LIC, d/b/a Value Garden Supply, Po Box 585, Saint Jose, MO 64502.

TABLE 2.—REGISTRANTS REQUESTING VOLUNTARY CANCELLATION—Continued

EPA Company no.	Company Name and Address
000802	Central Garden & Pet d/b/a Lilly Miller Brands/Excel Garden, Prod/cooke Lab Prod/chas H Lilly Co/garden Grow Co, Po Box 2289, Clackam, OR 97015.
000829	Southern Agricultural Insecticides, Inc., PO Box 218, Palmet, FL 34220.
000869	Green Light Co., PO Box 17985, San Anton, TX 78217.
000909	Central Garden & Pet d/b/a Lilly Miller Brands/Excel Garden, Prod/cooke Lab Prod/chas H Lilly Co/Garden Grow Co, Po Box 2289, Clackam, OR 97015.
001327	Fuller System, Inc., PO Box 3053, Wobu, MA 01888.
001386	Universal Cooperatives Inc., 1300 Corporate Center Curve, Eag, MN 55121.
001677	Ecolab Inc., 370 Wabasha St. Ecolab Center, St Pa, MN 55102.
001812	Dupont Crop Protection/Stine-Haskell Research Center, Agent For: Griffin L.I.C., PO Box 30, Newa, DE 197140030.
002935	Wilbur Ellis Co., PO Box 1286, Fres, CA 93715.
004581	Cerexagri, Inc., 630 Freedom Business Center, Suite 402, King Of Pruss, PA 19406.

TABLE 2.—REGISTRANTS REQUESTING VOLUNTARY CANCELLATION—Continued

EPA Company no.	Company Name and Address
004758	Pet Chemicals, PO Box 18993, Memph, TN 381810993.
004822	S.C. Johnson & Son Inc., 1525 Howe Street, Raci, WI 53403.
005389	Ecolab Inc., Agent For: Kay Chemical Co., 370 N. Wabasha Street, St. Pa, MN 55102.
005481	Amvac Chemical Corp., Attn: Jon C. Wood, 4695 Macarthur Ct., Suite 1250, Newport Bea, CA 926601706.
005887	Value Gardens Supply, LIC, d/b/a Value Garden Supply, PO Box 585, Saint Jose, MO 64502.
005905	Helena Chemical Co, 225 Schilling Blvd., Suite 300, Colliervil, TN 38017.
006836	Lonza Inc., 90 Boroline Rd., Allenda, NJ 07401.
006973	Soilserv Inc., PO Box 1286, Fres, CA 93715.
007173	Liphatech, Inc., 3600 W. Elm Street, Milwauk, WI 53209.
007401	Brazos Associates, Inc., Agent For: Voluntary Purchasing Group Inc., 1806 Auburn Drive, Carrollt, TX 750071451.
007501	Gustafson LIC, PO Box 660065, Dall, TX 75266.
007969	BASF Corp., Agricultural Products, PO Box 13528, Research Triangle Pa, NC 277093528.
008278	Robinson Associates, Agent For: Metro Biological Laboratory, 583 Canyon Rd, Redwood Ci, CA 94062.
008660	Sylorr Plant Corp., PO Box 142642, St. Lou, MO 631140642.
009198	The Andersons Lawn Fertilizer Division, Inc., dba/ Free Flow Fertilizer, Po Box 119, Maum, OH 43537.
009444	Waterbury Companies Inc., PO Box 640, Independen, LA 70443.
009779	D. O'Shaughnessy Consulting Inc., Agent For: Agriliance, LIC, 21 Birch Parkway, Spar, NJ 07871.

TABLE 2.—REGISTRANTS REQUESTING VOLUNTARY CANCELLATION—Continued

EPA Company no.	Company Name and Address
010163	Gowan Co, PO Box 5569, Yu, AZ 853665569.
010404	Lesco Inc., 1301 E. 9th Street, Suite 1300, Clevela, OH 441141849.
011474	Sungro Chemicals, Inc., PO Box 24632, Los Angel, CA 90024.
011656	Western Farm Service, Inc., Attn: Dunya Haproff-Fondse, PO Box 1168, Fres, CA 937151168.
011715	Speer Products Inc., 4242 B.F. Goodrich Blvd., Memph, TN 381810993.
019713	Drexel Chemical Co, PO Box 13327, Memph, TN 381130327.
028293	Unicorn Laboratories, 12385 Automobile Blvd., Clearwat, FL 33762.
034704	Loveland Products, Inc., PO Box 1286, Greel, CO 80632.
042057	Morgro Chemical Co, 145 W. Central Ave, Salt Lake Ci, UT 84107.
046515	Celex, Division of United Industries Corp., PO Box 142642, St Lou, MO 631140642.
047000	Steven E. Rogosheske, Agent For: Chem-Tech Ltd., 1479 W Pond Rd, Eag, MN 55122.
048273	Nufarm Co., Agent For: Marman USA Inc., 1333 Burr Ridge Parkway ι125A, Burr Rid, IL 60527.
049585	Alljack, Division of United Industries Corp., PO Box 142642, St Lou, MO 631140642.
049784	Research Laboratories, Inc., PO Box 801854, Houst, TX 772801854.
051036	Micro-Flo Co. LLC, 530 Oak Ct. Drive, Memph, TN 38117.
053883	Control Solutions, Inc., 5903 Genoa-Red Bluff, Pasade, TX 775071041.
056984	California Dept of Health Services, DCDC/Vector-Borne Disease Sect/MS 7307, PO Box 997413, Sacramen, CA 958997413.

TABLE 2.—REGISTRANTS REQUESTING VOLUNTARY CANCELLATION—Continued

EPA Company no.	Company Name and Address
059639	Valent U.S.A. Corp., PO Box 8025, Walnut Cre, CA 94596.
059905	Perma-Chink Systems Inc., 17635 N.E. 67th Ct., Redmo, WA 98052.
060255	California Dept of Food & Agriculture, Office of Pesticide Consultation & Analysis, 1220 N Street, Sacramen, CA 95814.
062719	Dow Agrosciences LLC, 9330 Zionsville Rd 308/2e225, Indianapol, IN 462681054.
066222	Makhteshim-Agan of North America Inc., 4515 Falls of Neuse Rd Ste 300, Ralei, NC 27609.
067517	PM Resources Inc., 13001 St. Charles Rock Rd, Bridget, MO 63044.
067760	Cheminova Inc., 1700 Route 23 - Ste 300, Way, NJ 07470.
071368	Nufarm, Inc., 1333 Burr Ridge Parkway, Suite 125A, Burr Rid, IL 60527.
071711	Nichino America, Inc., 4550 New Linden Hill Rd., Suite 501, Wilmingt, DE 19808.
071949	OMS Investments, Inc., c/o Delaware Corporate Management, 1105 N. Market Street, Wilmingt, DE 19899.
073049	Valent Biosciences Corp., 870 Technology Way, Suite 100, Libertyvil, IL 600486316.

III. What is the Agency's Authority for Taking this Action?

Section 6(f)(1) of FIFRA provides that a registrant of a pesticide product may at any time request that any of its pesticide registrations be canceled. FIFRA further provides that, before acting on the request, EPA must publish a notice of receipt of any such request in the **Federal Register**. Thereafter, the Administrator may approve such a request.

IV. Procedures for Withdrawal of Request

Registrants who choose to withdraw a request for cancellation must submit such withdrawal in writing to the person listed under **FOR FURTHER INFORMATION CONTACT**, postmarked before February 13, 2006. This written

withdrawal of the request for cancellation will apply only to the applicable FIFRA section 6(f)(1) request listed in this notice. If the product(s) have been subject to a previous cancellation action, the effective date of cancellation and all other provisions of any earlier cancellation action are controlling. The withdrawal request must also include a commitment to pay any reregistration fees due, and to fulfill any applicable unsatisfied data requirements.

V. Provisions for Disposition of Existing Stocks

The effective date of cancellation will be the date of the cancellation order. The orders effecting these requested cancellations will generally permit a registrant to sell or distribute existing stocks for 1 year after the date the cancellation request was received. This policy is in accordance with the Agency's statement of policy as prescribed in the **Federal Register** of June 26, 1991 (56 FR 29362) (FRL–3846–4). Exceptions to this general rule will be made if a product poses a risk concern, or is in noncompliance with reregistration requirements, or is subject to a data call-in. In all cases, product-specific disposition dates will be given in the cancellation orders.

Existing stocks are those stocks of registered pesticide products which are currently in the United States and which have been packaged, labeled, and released for shipment prior to the effective date of the cancellation action. Unless the provisions of an earlier order apply, existing stocks already in the hands of dealers or users can be distributed, sold, or used legally until they are exhausted, provided that such further sale and use comply with the EPA-approved label and labeling of the affected product. Exception to these general rules will be made in specific cases when more stringent restrictions on sale, distribution, or use of the products or their ingredients have already been imposed, as in a Special Review action, or where the Agency has identified significant potential risk concerns associated with a particular chemical.

List of Subjects

Environmental protection, Pesticides and pests.

Dated: August 3, 2005.

Arnold E. Layne,

Director, Information Technology and Resource Management Division, Office of Pesticide Programs.

[FR Doc. 05–16194 Filed 8–16–05; 8:45 am]

BILLING CODE 6560–50–S

ENVIRONMENTAL PROTECTION AGENCY

[OPP–2005–0234; FRL–7732–1]

Pyriproxyfen; Notice of Filing a Pesticide Petition to Establish a Tolerance for a Certain Pesticide Chemical in or on Food

AGENCY: Environmental Protection Agency (EPA).

ACTION: Notice.

SUMMARY: This notice announces the initial filing of pesticide petitions proposing the establishment of regulations for residues of a certain pesticide chemical in or on various food commodities.

DATES: Comments, identified by docket identification (ID) number OPP–2005–0234, must be received on or before September 16, 2005.

ADDRESSES: Comments may be submitted electronically, by mail, or through hand delivery/courier. Follow the detailed instructions as provided in Unit I. of the **SUPPLEMENTARY INFORMATION**.

FOR FURTHER INFORMATION CONTACT: Barbara Madden, Registration Division (7505C), Office of Pesticide Programs, Environmental Protection Agency, 1200 Pennsylvania Ave., NW., Washington, DC 20460–0001; telephone number: (703) 305–6463; e-mail address: *madden.barbara@epa.gov*.

SUPPLEMENTARY INFORMATION:

I. General Information

A. Does this Action Apply to Me?

You may be potentially affected by this action if you are an agricultural producer, food manufacturer, or pesticide manufacturer. Potentially affected entities may include, but are not limited to:

- Crop production (NAICS code 111)
- Animal production (NAICS code 112)
- Food manufacturing (NAICS code 311)
- Pesticide manufacturing (NAICS 32532)

This listing is not intended to be exhaustive, but rather provides a guide for readers regarding entities likely to be affected by this action. Other types of entities not listed in this unit could also be affected. The North American Industrial Classification System (NAICS) codes have been provided to assist you and others in determining whether this action might apply to certain entities. If you have any questions regarding the applicability of this action to a particular entity, consult the person listed under **FOR FURTHER INFORMATION CONTACT**.

B. How Can I Get Copies of this Document and Other Related Information?

1. *Docket*. EPA has established an official public docket for this action under docket ID number OPP–2005–0234. The official public docket consists of the documents specifically referenced in this action, any public comments received, and other information related to this action. Although, a part of the official docket, the public docket does not include Confidential Business Information (CBI) or other information whose disclosure is restricted by statute. The official public docket is the collection of materials that is available for public viewing at the Public Information and Records Integrity Branch (PIRIB), Rm. 119, Crystal Mall #2, 1801 S. Bell St., Arlington, VA. This docket facility is open from 8:30 a.m. to 4 p.m., Monday through Friday, excluding legal holidays. The docket telephone number is (703) 305–5805.

2. *Electronic access*. You may access this **Federal Register** document electronically through the EPA Internet under the ''**Federal Register**'' listings at *http://www.epa.gov/fedrgstr/*.

An electronic version of the public docket is available through EPA's electronic public docket and comment system, EPA Dockets. You may use EPA Dockets at *http://www.epa.gov/edocket/* to submit or view public comments, to access the index listing of the contents of the official public docket, and to access those documents in the public docket that are available electronically. Although, not all docket materials may be available electronically, you may still access any of the publicly available docket materials through the docket facility identified in Unit I.B.1. Once in the system, select ''search,'' then key in the appropriate docket ID number.

Certain types of information will not be placed in the EPA Dockets. Information claimed as CBI and other information whose disclosure is restricted by statute, which is not included in the official public docket, will not be available for public viewing in EPA's electronic public docket. EPA's policy is that copyrighted material will not be placed in EPA's electronic public docket but will be available only in printed, paper form in the official public docket. To the extent feasible, publicly available docket materials will be made available in EPA's electronic public docket. When a document is selected from the index list in EPA Dockets, the system will identify whether the

document is available for viewing in EPA's electronic public docket. Although, not all docket materials may be available electronically, you may still access any of the publicly available docket materials through the docket facility identified in Unit I.B.1. EPA intends to work towards providing electronic access to all of the publicly available docket materials through EPA's electronic public docket.

For public commenters, it is important to note that EPA's policy is that public comments, whether submitted electronically or on paper, will be made available for public viewing in EPA's electronic public docket as EPA receives them and without change, unless the comment contains copyrighted material, CBI, or other information whose disclosure is restricted by statute. When EPA identifies a comment containing copyrighted material, EPA will provide a reference to that material in the version of the comment that is placed in EPA's electronic public docket. The entire printed comment, including the copyrighted material, will be available in the public docket.

Public comments submitted on computer disks that are mailed or delivered to the docket will be transferred to EPA's electronic public docket. Public comments that are mailed or delivered to the docket will be scanned and placed in EPA's electronic public docket. Where practical, physical objects will be photographed, and the photograph will be placed in EPA's electronic public docket along with a brief description written by the docket staff.

C. How and to Whom Do I Submit Comments?

You may submit comments electronically, by mail, or through hand delivery/courier. To ensure proper receipt by EPA, identify the appropriate docket ID number in the subject line on the first page of your comment. Please ensure that your comments are submitted within the specified comment period. Comments received after the close of the comment period will be marked ''late.'' EPA is not required to consider these late comments. If you wish to submit CBI or information that is otherwise protected by statute, please follow the instructions in Unit I.D. Do not use EPA Dockets or e-mail to submit CBI or information protected by statute.

1. *Electronically*. If you submit an electronic comment as prescribed in this unit, EPA recommends that you include your name, mailing address, and an e-mail address or other contact information in the body of your comment. Also, include this contact information on the outside of any disk or CD ROM you submit, and in any cover letter accompanying the disk or CD ROM. This ensures that you can be identified as the submitter of the comment and allows EPA to contact you in case EPA cannot read your comment due to technical difficulties or needs further information on the substance of your comment. EPA's policy is that EPA will not edit your comment, and any identifying or contact information provided in the body of a comment will be included as part of the comment that is placed in the official public docket, and made available in EPA's electronic public docket. If EPA cannot read your comment due to technical difficulties and cannot contact you for clarification, EPA may not be able to consider your comment.

i. *EPA Dockets*. Your use of EPA's electronic public docket to submit comments to EPA electronically is EPA's preferred method for receiving comments. Go directly to EPA Dockets at *http://www.epa.gov/edocket/*, and follow the online instructions for submitting comments. Once in the system, select ''search,'' and then key in docket ID number OPP–2005–0234. The system is an ''anonymous access'' system, which means EPA will not know your identity, e-mail address, or other contact information unless you provide it in the body of your comment.

ii. *E-mail*. Comments may be sent by e-mail to *opp-docket@epa.gov*, Attention: Docket ID number OPP–2005–0234. In contrast to EPA's electronic public docket, EPA's e-mail system is not an ''anonymous access'' system. If you send an e-mail comment directly to the docket without going through EPA's electronic public docket, EPA's e-mail system automatically captures your e-mail address. E-mail addresses that are automatically captured by EPA's e-mail system are included as part of the comment that is placed in the official public docket, and made available in EPA's electronic public docket.

iii. *Disk or CD ROM*. You may submit comments on a disk or CD ROM that you mail to the mailing address identified in Unit I.C.2. These electronic submissions will be accepted in WordPerfect or ASCII file format. Avoid the use of special characters and any form of encryption.

2. *By mail*. Send your comments to: Public Information and Records Integrity Branch (PIRIB) (7502C), Office of Pesticide Programs (OPP), Environmental Protection Agency, 1200 Pennsylvania Ave., NW., Washington, DC 20460–0001, Attention: Docket ID number OPP–2005–0234.

3. *By hand delivery or courier*. Deliver your comments to: Public Information and Records Integrity Branch (PIRIB), Office of Pesticide Programs (OPP), Environmental Protection Agency, Rm. 119, Crystal Mall #2, 1801 S. Bell St., Arlington, VA, Attention: Docket ID number OPP–2005–0234. Such deliveries are only accepted during the docket's normal hours of operation as identified in Unit I.B.1.

D. How Should I Submit CBI to the Agency?

Do not submit information that you consider to be CBI electronically through EPA's electronic public docket or by e-mail. You may claim information that you submit to EPA as CBI by marking any part or all of that information as CBI (if you submit CBI on disk or CD ROM, mark the outside of the disk or CD ROM as CBI and then identify electronically within the disk or CD ROM the specific information that is CBI). Information so marked will not be disclosed except in accordance with procedures set forth in 40 CFR part 2.

In addition to one complete version of the comment that includes any information claimed as CBI, a copy of the comment that does not contain the information claimed as CBI must be submitted for inclusion in the public docket and EPA's electronic public docket. If you submit the copy that does not contain CBI on disk or CD ROM, mark the outside of the disk or CD ROM clearly that it does not contain CBI. Information not marked as CBI will be included in the public docket and EPA's electronic public docket without prior notice. If you have any questions about CBI or the procedures for claiming CBI, please consult the person listed under **FOR FURTHER INFORMATION CONTACT**.

E. What Should I Consider as I Prepare My Comments for EPA?

You may find the following suggestions helpful for preparing your comments:

1. Explain your views as clearly as possible.
2. Describe any assumptions that you used.
3. Provide copies of any technical information and/or data you used that support your views.
4. If you estimate potential burden or costs, explain how you arrived at the estimate that you provide.
5. Provide specific examples to illustrate your concerns.
6. Make sure to submit your comments by the deadline in this notice.

7. To ensure proper receipt by EPA, be sure to identify the docket ID number assigned to this action in the subject line on the first page of your response. You may also provide the name, date, and **Federal Register** citation.

II. What Action is the Agency Taking?

EPA has received a pesticide petition as follows proposing the establishment and/or amendment of regulations for residues of a certain pesticide chemical in or on various food commodities under section 408 of the Federal Food, Drug, and Cosmetic Act (FFDCA), 21 U.S.C. 346a. EPA has determined that this petition contains data or information regarding the elements set forth in FFDCA section 408(d)(2); however, EPA has not fully evaluated the sufficiency of the submitted data at this time or whether the data support granting of the petition. Additional data may be needed before EPA rules on the petition.

List of Subjects

Environmental protection, Agricultural commodities, Feed additives, Food additives, Pesticides and pests, Reporting and recordkeeping requirements.

Dated: August 11, 2005.

Lois Rossi,

Director, Registration Division, Office of Pesticide Programs.

Summary of Petitions

The petitioner's summary of the pesticide petitions is printed below as required by FFDCA section 408(d)(3). The summary of the petitions was prepared by Interregional Research Project Number 4 (IR-4), and represents the view of the petitioner. The petion summary announces the availabilty of a description of the analytical methods available to EPA for the detection and measurement of the pesticide chemical residues or an explanation of why no such method is needed.

Interregional Research Project

PP 3E6582, PP 3E6596, PP 3E6750, PP 4E6865, PP 4E6866

EPA has received pesticide petitions (PP) 3E6582, 3E6596, 3E6750, 4E6865, and 4E6866 from the Interregional Research Project Number 4 IR-4, Technology Center of New Jersey, Rutgers, the State University of New Jersey, 681 U.S. Highway #1 S., North Brunswick, NJ 08902–3390 proposing, pursuant to section 408(d) of the FFDCA, 21 U.S.C. 346a(d), to amend 40 CFR part 180 by establishing tolerances for residues of pyriproxyfen, 2-[1-methyl-2-(4-phenoxyphenoxy) ethoxy]pyridine, in or on raw agricultural commodities as follows:

1. PP 3E6582 proposes a tolerance for white sapote and Ugli fruit at 0.3 parts per million (ppm).
2. PP 3E6596 proposes a tolerance for legume vegetables, crop subgroups 6a, 6b, and 6c at 0.2 ppm.
3. PP 3E6750 proposes a tolerance for onion, dry bulb at 0.05 ppm.
4. PP 4E6865 proposes a tolerance for strawberry at 0.3 ppm.
5. PP 4E6866 proposes a tolerance for grape at 2.5 ppm and raisin at 4.0 ppm.

EPA has determined that the petitions contain data or information regarding the elements set forth in section 408(d)(2) of the FFDCA; however, EPA has not fully evaluated the sufficiency of the submitted data at this time or whether the data support granting of the petitions. Additional data may be needed before EPA rules on the petitions.

A. Residue Chemistry

1. *Plant and animal metabolism.* Metabolism of ^{14}C-pyriproxyfen labeled in the phenoxyphenyl ring and in the pyridyl ring has been studied in cotton, apples, tomatoes, lactating goats, laying hens, and rats. The major metabolic pathways in plants is aryl hydroxylation and cleavage of the ether linkage, followed by further metabolism into more polar products by further oxidation and/or conjugation reactions. However, the bulk of the radiochemical residue on raw agricultural commodities (RAC) samples remained as parent. Comparing metabolites detected and quantified from cotton, apple, tomato, goat, hen, and rat shows that there are no significant aglycones in plants which are not also present in the excreta or tissues of animals. The residue of concern is best defined as the parent, pyriproxyfen.

Ruminant and poultry metabolism studies demonstrated that transfer of administered ^{14}C-residues to tissues was low. Total ^{14}C-residues in goat milk, muscle and tissues accounted for less than 2% of the administered dose, and were less than 1 part per million (ppm) in all cases. In poultry, total ^{14}C-residues in eggs, muscle and tissues accounted for about 2.7% of the administered dose, and were less than 1 ppm in all cases except for gizzard.

2. *Analytical method.* Practical analytical methods for detecting and measuring levels of pyriproxyfen (and relevant metabolites) have been developed and validated in or on all appropriate agricultural commodities, respective processing fractions, milk, animal tissues, and environmental samples. The extraction methodology has been validated using aged radiochemical residue samples from metabolism studies. The methods have been validated in cottonseed, apples, soil, and oranges at independent laboratories. EPA has successfully validated the analytical methods for analysis of cottonseed, pome fruit, nutmeats, almond hulls, and fruiting vegetables. The limit of detection of pyriproxyfen in the methods is 0.01 ppm which will allow monitoring of food with residues at the levels proposed for the tolerances.

3. *Magnitude of residues.* Residue data were generated with pyriproxyfen for tolerance setting and dietary exposure estimates. Adequate residue trials were performed with pyriproxyfen to support the uses described in this notice of filing.

B. Toxicological Profile

An assessment of toxic effects caused by pyriproxyfen is discussed in Unit III.A. and Unit III.B. of the **Federal Register** of April 4, 2001, (66 FR 17883) (FRL–6772–4).

1. *Animal metabolism.* The absorption, tissue distribution, metabolism and excretion of ^{14}C-labeled pyriproxyfen were studied in rats after single oral doses of 2 or 1,000 milligrams/kilograms body weight (mg/kg bwt) (phenoxyphenyl and pyridyl label), and after a single oral dose of 2 mg/kg bwt, phenoxyphenyl label only, following 14 daily oral doses at 2 mg/kg bwt of unlabeled material. For all dose groups, most (–96%) of the administered radiolabel was excreted in the urine and feces within 2 days after radiolabeled test material dosing, and 92–98% of the administered dose was excreted within 7 days. Seven days after dosing, tissue residues were generally low, accounting for no more than 0.3% of the dosed ^{14}C. Radiocarbon concentrations in fat were higher than in other tissues analyzed. Recovery in tissues over time indicates that the potential for bioaccumulation is minimal. There were no significant sex or dose-related differences in excretion or metabolism.

2. *Metabolite toxicology.* Metabolism studies of pyriproxyfen in rats, goats and hens, as well as the fish bioaccumulation study demonstrate that the parent is very rapidly metabolized and eliminated. In the rat, most (88–96%) of the administered radiolabel was excreted in the urine and feces within 2 days of dosing, and 92–98% of the administered dose was excreted within 7 days. Tissue residues were low 7 days after dosing, accounting for no more than 0.3% of the dosed ^{14}C. Because parent and metabolites are not retained

in the body, the potential for acute toxicity from in situ formed metabolites is low. The potential for chronic toxicity is adequately tested by chronic exposure to the parent at the maximum tolerated dose (MTD) and consequent chronic exposure to the internally formed metabolites.

Seven metabolites of pyriproxyfen, 4'-OH-pyriproxyfen, 5'-OH-pyriproxyfen, desphenyl-pyriproxyfen, POPA, PYPAC, 2-OH-pyridine and 2,5-diOH-pyridine, have been tested for mutagenicity, via Ames Assay, and acute oral toxicity to mice. All seven metabolites were tested in the Ames assay with and without S9 at doses up to 5,000 micro-grams per plate or up to the growth inhibitory dose. The metabolites did not induce any significant increases in revertible colonies in any of the test strains. Positive control chemicals showed marked increases in reverting colonies. The acute toxicity to mice of 4'-OH-pyriproxyfen, 5'-OH-pyriproxyfen, desphenyl-pyriproxyfen, POPA, and PYPAC did not appear to markedly differ from pyriproxyfen, with all metabolites having acute oral lethal dose (LD_{50}) values greater than 2,000 mg/kg bwt. The two pyridines, 2-OH-pyridine and 2,5-diOH-pyridine, gave acute oral LD_{50} values of 124 (male) and 166 (female) mg/kg bwt, and 1,105 (male) and 1,000 (female) mg/kg bwt, respectively.

3. *Endocrine disruption*. Pyriproxyfen is specifically designed to be an insect growth regulator and is known to produce juvenoid effects on arthropod development. However, this mechanism-of-action in target insects and some other arthropods has no relevance to any mammalian endocrine system. While specific tests, uniquely designed to evaluate the potential effects of pyriproxyfen on mammalian endocrine systems have not been conducted, the toxicology of pyriproxyfen has been extensively evaluated in acute, sub-chronic, chronic, developmental, and reproductive toxicology studies including detailed histopathology of numerous tissues. The results of these studies show no evidence of any endocrine-mediated effects and no pathology of the endocrine organs. Consequently, it is concluded that pyriproxyfen does not possess estrogenic or endocrine disrupting properties applicable to mammals.

C. Aggregate Exposure

1. *Dietary exposure*. An evaluation of chronic dietary exposure including both food and drinking water has been performed for the U.S. population and various sub-populations including infants and children. No acute dietary endpoint and dose was identified in the toxicology data base for pyriproxyfen; therefore, Valent Corporation concludes that, there is a reasonable certainty of no harm from acute dietary exposure.

i. *Food*. Chronic dietary exposure to pyriproxyfen residues was calculated for the U.S. population and 16 population subgroups assuming tolerance level residues, processing factors from residue studies, and assuming 100% of the crop will be treated with pyriproxyfen. The analyses included residue data for all existing uses, pending uses, and proposed new uses. The results from several representative subgroups are listed below. Chronic dietary exposure to the overall U.S. population is estimated to be 0.0238 mg/kg bwt/day, representing 6.8% of the reference dose (RfD). For the most highly exposed sub-population, infants, <1 years of age, dietary exposure is calculated to be 0.0245 mg/kg bwt/day, or 7.0% of the RfD. Generally speaking, the Agency has no cause for concern if total residue contribution for established and proposed tolerances is less than 100% of the RfD.

ii. *Drinking water*. Since pyriproxyfen is applied outdoors to growing agricultural crops, the potential exists for pyriproxyfen or its metabolites to reach ground water or surface water that may be used for drinking water. Because of the physical properties of pyriproxyfen, it is unlikely that pyriproxyfen or its metabolites can leach to potable ground water. To quantify potential exposure from drinking water, surface water concentrations for pyriproxyfen were estimated using generic expected environmental concentration (GENEEC). The residue levels in drinking water are the peak chronic residue level as estimated by GENEEC. Using standard assumptions about body weight and water consumption, the chronic exposure to pyriproxyfen from this drinking water would be 0.00009 mg/kg bwt/day for adults and ''0'' year infants, and represent 0.025% of the RfD (0.35 mg/kg/day). Based on this worse case analysis, the contribution of water to the dietary risk is negligible.

2. *Non-dietary exposure*. Pyriproxyfen is currently registered for use on residential non-food sites. Pyriproxyfen is the active ingredient in numerous registered products for flea and tick control. Formulations include foggers, aerosol sprays, emulsifiable concentrates, and impregnated materials (pet collars). With the exception of the pet collar uses, consumer use of pyriproxyfen typically results in acute and short-term intermittent exposures. No acute dermal, or inhalation dose or endpoint was identified in the toxicity data for pyriproxyfen. Similarly, doses and endpoints were not identified for short-term and intermediate-term dermal or inhalation exposure to pyriproxyfen. The Agency has concluded that there are reasonable certainties of no harm from acute, short-term, and intermediate-term dermal and inhalation occupational and residential exposures due to the lack of significant toxicological effects observed.

Chronic residential post-application exposure and risk assessments were conducted to estimate the potential risks from pet collar uses. The risk assessment was conducted using the following assumptions: application rate of 0.58 mg active ingredient (a.i.)/day, average body weight for a 1–6 year old child of 10 kg, the a.i. dissipates uniformly through 365 days (the label instructs to change the collar once a year), 1% of the active ingredient is available for dermal and inhalation exposure per day (assumption from Draft EPA Standard Operating Procedures (SOPs) for Residential Exposure Assessments, December 18, 1997). The assessment also, assumes an absorption rate of 100%. This is a conservative assumption since the dermal absorption was estimated to be 10%. The estimated chronic term MOE was 61,000 for children, and 430,000 for adults. The risk estimates indicate that potential risks from pet collar uses do not exceed the Agency's level of concern.

D. Cumulative Effects

Section 408(b)(2)(D)(v) requires that the Agency must consider ''available information'' concerning the cumulative effects of a particular pesticide's residues and ''other substances that have a common mechanism of toxicity.'' Available information in this context include not only toxicity, chemistry, and exposure data, but also, scientific policies and methodologies for understanding common mechanisms of toxicity and conducting cumulative risk assessments. For most pesticides, although, the Agency has some information in its files that may turn out to be helpful in eventually determining whether a pesticide shares a common mechanism of toxicity with any other substances, EPA does not at this time have the methodologies to resolve the complex scientific issues concerning common mechanism of toxicity in a meaningful way.

There are no other pesticidal compounds that are structurally related to pyriproxyfen and have similar effects on animals. In consideration of potential

cumulative effects of pyriproxyfen and other substances that may have a common mechanism of toxicity, there are currently no available data or other reliable information indicating that any toxic effects produced by pyriproxyfen would be cumulative with those of other chemical compounds. Thus, only the potential risks of pyriproxyfen have been considered in this assessment of aggregate exposure and effects.

E. Safety Determination

1. *U.S. population*—i. *Chronic dietary exposure and risk to adult sub-populations.* The results of the chronic dietary exposure assessment described above demonstrate that estimates of chronic dietary exposure for all existing, pending and proposed uses of pyriproxyfen are well below the chronic RfD of 0.35 mg/kg/day. The estimated chronic dietary exposure from food for the overall U.S. population and many non-child/infant subgroups is from 0.006 to 0.0245 mg/kg bwt/day, 1.7 to 7.0% of the RfD. Addition of the small but worse case potential chronic exposure from drinking water (calculated above) increases exposure by only 0.00002 mg/kg bwt/day and does not change the maximum occupancy of the RfD significantly. Generally, the Agency has no cause for concern if total residue contribution is less than 100% of the RfD. It can be concluded that there is a reasonable certainty that no harm will result to the overall U.S. population or any non-child/infant subgroups from aggregate, chronic dietary exposure to pyriproxyfen residues.

ii. *Acute dietary exposure and risk to adult sub-populations.* No acute dietary endpoint and dose were identified in the toxicology data base for pyriproxyfen; therefore, it can be concluded that there is a reasonable certainty that no harm will result to the overall U.S. population or any non-child/infant subgroups from aggregate, acute dietary exposure to pyriproxyfen residues.

iii. *Non-dietary exposure and aggregate risk to adult sub-populations.* Acute, short-term, and intermediate-term dermal and inhalation risk assessments for residential exposure are not required due to the lack of significant toxicological effects observed. The results of a chronic residential post-application exposure and risk assessment for pet collar uses demonstrate that potential risks from pet collar uses do not exceed the Agency's level of concern. The estimated chronic term margin of exposure (MOE) for adults was 5,700.

2. *Infants and children*—i. Safety factor for infants and children. In assessing the potential for additional sensitivity of infants and children to residues of pyriproxyfen, FFDCA section 408 provides that EPA shall apply an additional margin of safety, up to 10-fold, for added protection for infants and children in the case of threshold effects unless EPA determines that a different margin of safety will be safe for infants and children.

The toxicological data base for evaluating pre-natal and post-natal toxicity for pyriproxyfen is complete with respect to current data requirements. There are no special prenatal or postnatal toxicity concerns for infants and children, based on the results of the rat and rabbit developmental toxicity studies or the 2-generation reproductive toxicity study in rats. Valent concludes that reliable data support use of the standard 100-fold uncertainty factor and that an additional uncertainty factor is not needed for pyriproxyfen to be further protective of infants and children.

ii. *Chronic dietary exposure and risk to infants and children.* Using the conservative exposure assumptions described above, the percentage of the RfD that will be utilized by chronic dietary (food only) exposure to residues of pyriproxyfen ranges from 0.013 mg/kg bwt/day children 6–12 years old, up to 0.0245 mg/kg bwt/day for infants (0 years of age), 3.8 and 7.0% of the RfD, respectively. Adding the worse case potential incremental exposure to infants from pyriproxyfen in drinking water (0.9×10^{-4} mg/kg bwt/day) does not materially increase the aggregate, chronic dietary exposure and only increases the occupancy of the RfD by 0.009%. EPA generally has no concern for exposures below 100% of the RfD because the RfD represents the level at or below which daily aggregate dietary exposure over a lifetime will not pose appreciable risks to human health. Valent concludes that, there is a reasonable certainty that no harm will result to infants and children from aggregate, chronic dietary exposure to pyriproxyfen residues.

iii. *Acute dietary exposure and risk infants and children.* No acute dietary endpoint and dose were identified in the toxicology data base for pyriproxyfen; therefore, Valent believes that there is a reasonable certainty that no harm will result to infants and children from aggregate, acute dietary exposure to pyriproxyfen residues.

iv. *Non-dietary exposure and aggregate risk infants and children.* Acute, short-term, and intermediate-term dermal and inhalation risk assessments for residential exposure are not required due to the lack of significant toxicological effects observed. The results of a chronic residential post-application exposure and risk assessment for pet collar uses demonstrate that potential risks from pet collar uses do not exceed the Agency's level of concern. The estimated chronic term MOE for children was 1,425.

F. International Tolerances

There are presently no existing Codex maximum residue levels for pyriproxyfen.

FR Doc. 05–16301 Filed 8–16–05; 8:45 a.m.]

BILLING CODE 6560–50–S

ENVIRONMENTAL PROTECTION AGENCY

[OEI–2005–2006; FRL–7951–5]

Office of Environmental Information; Announcement of Comment Period for Environmental Sampling, Analysis and Results Draft Data Standards

AGENCY: Environmental Protection Agency.

ACTION: Notice of Data Availability & Comment Period.

SUMMARY: Notice of availability for public review for a 90 day comment period is hereby given for the Draft Environmental Sampling, Analysis and Results (ESAR) Data Standards.

The Draft Environmental Sampling, Analysis, and Results Data Standards are a collection of 14 standards that are based on the business processes used to collect and analyze environmental data. The collection is comprised of an Overview, four primary standards and nine supporting components. The fourteen ESAR data standards are designed to provide implementation flexibility and improve the exchange of environmental data across the nation. States and U.S. EPA completed a technical review of these data standards in the Spring of 2004. That review lead to the formation of Air, Waste, and Water teams, which reviewed the comments and produced this final collection of draft data standard documents. Reviewers will see that the standards may not use the specific terminology for a given environmental program. In order to make the standards work for the broadest audience, terms were specifically chosen for relevance to the broadest audience. Similarly, the standards do not address all details of each environmental program. These standards, when final, are intended to serve as a foundation for information

exchange across environmental media (water, air, waste). Media or program specific data elements may need to be added in an exchange.

Reviewers please note that the draft data standards are based on and incorporate related efforts such as other data standards, electronic data deliverables, and systems data dictionaries in media specific areas including: the EDSC data standard ''Reporting Water Quality Results for Chemical and Microbiological Analytes;'' exchange specifications such as the ''Staged Electronic Data Deliverable'' (SEDD); data dictionaries such as the Air Quality Monitoring System (AQS); as well as specifications from the National Environmental Laboratory Accrediting Council (NELAC) and the Laboratory Information Management System (LIMS).

DATES: Comments must be submitted on or before November 12, 2005.

FOR FURTHER INFORMATION CONTACT: Linda Spencer; Environmental Protection Agency; 1200 Pennsylvania Avenue, MC 2822T; Washington, DC 20460; Phone: 202–566–1651; Fax: 202–566–1624; E-mail: *Spencer.linda@epa.gov*.

SUPPLEMENTARY INFORMATION: These standards were developed by the Environmental Data Standards Council (EDSC). The EDSC is a partnership of among EPA, States, and Tribes which promotes the efficient sharing of environmental information through the cooperative development of data standards.

The standards are intended for use in environmental data exchanges among States, Tribal entities and the U.S. EPA. They are not meant to dictate or to limit data an agency chooses to collect for its own internal purposes. Adoption of a data standard should not be interpreted to mean that revisions to databases or information systems are required. What the adoption does mean is that formats for sharing data with Exchange Network (EN) partners will change because the Exchange Network has adopted Shared Schema Components based on the data standards. The SSCs are available on the Exchange Network Web site at *http://www.exchangenetwork.net.*

The draft data standards and ''Frequently Asked Questions'' document can be found on EDSC's Web site *http://www.envdatastandards.net/* and are available through the Docket system as indicated below.

I. General Information

A. How Can I Get Copies Of These Documents and Other Related Information?

1. Docket. EPA has established an official public docket for this action under Docket ID No. OEI–2005–2006. The official public docket is the collection of materials that is available for public viewing at the OEI Docket in the EPA Docket Center, (EPA/DC) EPA West, Room B102, 1301 Constitution Ave., NW., Washington, DC. The EPA Docket Center Public Reading Room is open from 8:30 a.m. to 4:30 p.m., Monday through Friday, excluding legal holidays. The telephone number for the Public Reading Room is (202) 566–1744, and the telephone number for the OEI Docket is (202) 566–1752.

2. Electronic Access. You may access this **Federal Register** document electronically through the EPA Internet under the ''**Federal Register**'' listings at *http://www.epa.gov/fedrgstr/.*

An electronic version of the public docket is available through EPA's electronic public docket and comment system, EPA Dockets. You may use EPA Dockets at *http://www.epa.gov/edocket/* to view public comments, access the index listing of the contents of the official public docket, and to access those documents in the public docket that are available electronically. Although not all docket materials may be available electronically, you may still access any of the publicly available docket materials through the docket facility identified in Unit I.B. Once in the system, select ''search,'' then key in the appropriate docket identification number.

Dated: August 9, 2005.

Oscar Morales,

Division Director, Collection Strategies Division, Office of Information Collection, U.S. Environmental Protection Agency.

[FR Doc. 05–16113 Filed 8–16–05; 8:45 am]

BILLING CODE 6560–50–U

ENVIRONMENTAL PROTECTION AGENCY

[OPPT–2002–0009; FRL–7728–6]

Dibasic Esters (DBEs) EPA Program Review; Notice of Availability and Solicitation of Comments

AGENCY: Environmental Protection Agency (EPA).

ACTION: Notice.

SUMMARY: Under section 4 of the Toxic Substances Control Act (TSCA), EPA issued a testing consent order that incorporates an enforceable consent agreement (ECA) regarding dimethyl succinate (DMS, Chemical Abstract Service (CAS) No. 106–65–0), dimethyl glutarate (DMG, CAS No. 1119–40–0), and dimethyl adipate (DMA, CAS No. 627–93–0) known collectively as Dibasic Esters (DBEs). The companies subject to this ECA agreed to conduct toxicity testing that was intended to satisfy certain toxicological data needs identified by EPA and the Consumer Product Safety Commission (CPSC). The results of this testing can be used to develop a more complete toxicological profile of DBEs and to assess certain potential human health risks posed by DBEs present in certain industrial and consumer products, including paint stripper formulations. This notice announces that EPA has initiated the program review component of the DBEs ECA testing program and solicits public comment on the need for a third, and final, phase of testing involving *in vivo* dermal penetration rate testing. Comments will be considered in EPA's decision on whether or not to proceed with the third phase of testing under the ECA.

DATES: Comments, identified by docket identification (ID) number OPPT–2002–0009, must be received on or before September 16, 2005.

ADDRESSES: Comments may be submitted electronically, by mail, or through hand delivery/courier. Follow the detailed instructions as provided in Unit I. of the **SUPPLEMENTARY INFORMATION**.

FOR FURTHER INFORMATION CONTACT: *For general information contact*: Colby Lintner, Regulatory Coordinator, Environmental Assistance Division (7408M), Office of Pollution Prevention and Toxics, Environmental Protection Agency, 1200 Pennsylvania Ave., NW., Washington, DC 20460–0001; telephone number: (202) 554–1404; e-mail address: *TSCA-Hotline@epa.gov*.

For technical information contact: George Semeniuk, Chemical Control Division (7405M), Office Pollution Prevention and Toxics, Environmental Protection Agency, 1200 Pennsylvania Ave., NW., Washington, DC 20460–0001; telephone number: (202) 564–8174; e-mail address: *semeniuk.george@epa.gov*.

SUPPLEMENTARY INFORMATION:

I. General Information

A. Does this Action Apply to Me?

You may be potentially affected by this action if you use DBEs or DBEs-containing products, such as hand cleaners or consumer-oriented paint strippers, or manufacture (including

import), process, or distribute such products in commerce. Other interested parties may also include persons who are or may be required to conduct testing of chemical substances under TSCA. Potentially affected entities may include, but are not limited to:

- Manufacturers of artificial synthetic fibers and filaments (NAICS 3252), e.g., manufacturers of nylon.
- Manufacturers of paint removal products (NAICS 325510), e.g., formulators of consumer paint strippers.
- Manufacturers of soap and cleaning compounds (NAICS 32561), e.g., formulators of DBEs-containing hand cleaners.

This listing is not intended to be exhaustive, but rather provides a guide for readers regarding entities likely to be affected by this action. Other types of entities not listed in this unit could also be affected. The North American Industrial Classification System (NAICS) codes have been provided to assist you and others in determining whether this action might apply to certain entities. If you have any questions regarding the applicability of this action to a particular entity, consult the technical person listed under **FOR FURTHER INFORMATION CONTACT**.

B. How Can I Get Copies of this Document and Other Related Information?

1. *Docket*. EPA has established an official public docket for this action under docket ID number OPPT–2002–0009. The official public docket consists of the documents specifically referenced in this action, any public comments received, and other information related to this action. Although a part of the official docket, the public docket does not include Confidential Business Information (CBI) or other information whose disclosure is restricted by statute. The official public docket is the collection of materials that is available for public viewing at the EPA Docket Center, Rm. B102-Reading Room, EPA West, 1301 Constitution Ave., NW., Washington, DC. The EPA Docket Center is open from 8:30 a.m. to 4:30 p.m., Monday through Friday, excluding legal holidays. The EPA Docket Center Reading Room telephone number is (202) 566–1744 and the telephone number for the OPPT Docket, which is located in EPA Docket Center, is (202) 566–0280.

2. *Electronic access*. You may access this **Federal Register** document electronically through the EPA Internet under the ''**Federal Register**'' listings at *http://www.epa.gov/fedrgstr/*.

An electronic version of the public docket is available through EPA's electronic public docket and comment system, EPA Dockets. You may use EPA Dockets at *http://www.epa.gov/edocket/* to submit or view public comments, access the index listing of the contents of the official public docket, and to access those documents in the public docket that are available electronically. Although not all docket materials may be available electronically, you may still access any of the publicly available docket materials through the docket facility identified in Unit I.B.1. Once in the system, select ''search,'' then key in the appropriate docket ID number.

Certain types of information will not be placed in the EPA Dockets. Information claimed as CBI and other information whose disclosure is restricted by statute, which is not included in the official public docket, will not be available for public viewing in EPA's electronic public docket. EPA's policy is that copyrighted material will not be placed in EPA's electronic public docket but will be available only in printed, paper form in the official public docket. To the extent feasible, publicly available docket materials will be made available in EPA's electronic public docket. When a document is selected from the index list in EPA Dockets, the system will identify whether the document is available for viewing in EPA's electronic public docket. Although not all docket materials may be available electronically, you may still access any of the publicly available docket materials through the docket facility identified in Unit I.B.1. EPA intends to work towards providing electronic access to all of the publicly available docket materials through EPA's electronic public docket.

For public commenters, it is important to note that EPA's policy is that public comments, whether submitted electronically or in paper, will be made available for public viewing in EPA's electronic public docket as EPA receives them and without change, unless the comment contains copyrighted material, CBI, or other information whose disclosure is restricted by statute. When EPA identifies a comment containing copyrighted material, EPA will provide a reference to that material in the version of the comment that is placed in EPA's electronic public docket. The entire printed comment, including the copyrighted material, will be available in the public docket.

Public comments submitted on computer disks that are mailed or delivered to the docket will be transferred to EPA's electronic public docket. Public comments that are mailed or delivered to the docket will be scanned and placed in EPA's electronic public docket. Where practical, physical objects will be photographed, and the photograph will be placed in EPA's electronic public docket along with a brief description written by the docket staff.

C. How and To Whom Do I Submit Comments?

You may submit comments electronically, by mail, or through hand delivery/courier. To ensure proper receipt by EPA, identify the appropriate docket ID number in the subject line on the first page of your comment. Please ensure that your comments are submitted within the specified comment period. Comments received after the close of the comment period will be marked ''late.'' EPA is not required to consider these late comments. If you wish to submit CBI or information that is otherwise protected by statute, please follow the instructions in Unit I.D. Do not use EPA Dockets or e-mail to submit CBI or information protected by statute.

1. *Electronically*. If you submit an electronic comment as prescribed in this unit, EPA recommends that you include your name, mailing address, and an e-mail address or other contact information in the body of your comment. Also include this contact information on the outside of any disk or CD ROM you submit, and in any cover letter accompanying the disk or CD ROM. This ensures that you can be identified as the submitter of the comment and allows EPA to contact you in case EPA cannot read your comment due to technical difficulties or needs further information on the substance of your comment. EPA's policy is that EPA will not edit your comment, and any identifying or contact information provided in the body of a comment will be included as part of the comment that is placed in the official public docket, and made available in EPA's electronic public docket. If EPA cannot read your comment due to technical difficulties and cannot contact you for clarification, EPA may not be able to consider your comment.

i. *EPA Dockets*. Your use of EPA's electronic public docket to submit comments to EPA electronically is EPA's preferred method for receiving comments. Go directly to EPA Dockets at *http://www.epa.gov/edocket/*, and follow the online instructions for submitting comments. Once in the system, select ''search,'' and then key in docket ID number OPPT–2002–0009. The system is an ''anonymous access'' system, which means EPA will not know your identity, e-mail address, or

other contact information unless you provide it in the body of your comment.

ii. *E-mail*. Comments may be sent by e-mail to *oppt.ncic@epa.gov*, Attention: Docket ID Number OPPT–2002–0009. In contrast to EPA's electronic public docket, EPA's e-mail system is not an ''anonymous access'' system. If you send an e-mail comment directly to the docket without going through EPA's electronic public docket, EPA's e-mail system automatically captures your e-mail address. E-mail addresses that are automatically captured by EPA's e-mail system are included as part of the comment that is placed in the official public docket, and made available in EPA's electronic public docket.

iii. *Disk or CD ROM*. You may submit comments on a disk or CD ROM that you mail to the mailing address identified in Unit I.C.2. These electronic submissions will be accepted in WordPerfect or ASCII file format. Avoid the use of special characters and any form of encryption.

2. *By mail*. Send your comments to: Document Control Office (7407M), Office of Pollution Prevention and Toxics (OPPT), Environmental Protection Agency, 1200 Pennsylvania Ave., NW., Washington, DC 20460–0001.

3. *By hand delivery or courier*. Deliver your comments to: OPPT Document Control Office (DCO) in EPA East Bldg., Rm. 6428, 1201 Constitution Ave., NW., Washington, DC. Attention: Docket ID Number OPPT–2002–0009. The DCO is open from 8 a.m. to 4 p.m., Monday through Friday, excluding legal holidays. The telephone number for the DCO is (202) 564–8930.

D. How Should I Submit CBI to the Agency?

Do not submit information that you consider to be CBI electronically through EPA's electronic public docket or by e-mail. You may claim information that you submit to EPA as CBI by marking any part or all of that information as CBI (if you submit CBI on disk or CD ROM, mark the outside of the disk or CD ROM as CBI and then identify electronically within the disk or CD ROM the specific information that is CBI). Information so marked will not be disclosed except in accordance with procedures set forth in 40 CFR part 2.

In addition to one complete version of the comment that includes any information claimed as CBI, a copy of the comment that does not contain the information claimed as CBI must be submitted for inclusion in the public docket and EPA's electronic public docket. If you submit the copy that does not contain CBI on disk or CD ROM, mark the outside of the disk or CD ROM clearly that it does not contain CBI. Information not marked as CBI will be included in the public docket and EPA's electronic public docket without prior notice. If you have any questions about CBI or the procedures for claiming CBI, please consult the technical person listed under **FOR FURTHER INFORMATION CONTACT**.

E. What Should I Consider as I Prepare My Comments for EPA?

We invite you to provide your views on the various options we propose, new approaches we have not considered, the potential impacts of the various options (including possible unintended consequences), and any data or information that you would like the Agency to consider during the development of the final action. You may find the following suggestions helpful for preparing your comments:

1. Explain your views as clearly as possible.
2. Describe any assumptions that you used.
3. Provide copies of any technical information and/or data you used that support your views.
4. If you estimate potential burden or costs, explain how you arrived at the estimate that you provide.
5. Provide specific examples to illustrate your concerns.
6. Offer alternative ways to improve the notice.
7. Make sure to submit your comments by the deadline in this notice.
8. To ensure proper receipt by EPA, be sure to identify the docket ID number assigned to this action in the subject line on the first page of your response. You may also provide the name, date, and **Federal Register** citation.

II. Background

A. Why are DBEs the Subject of Health Effects Testing?

In the early 1990s, CPSC was conducting an investigation of consumer-oriented paint stripper formulations and seeking health and safety information that would permit a comparison of the risks posed by available paint stripping products. At the time, DBE-based products were being promoted in advertising and product labeling as ''safe'' alternatives to other consumer paint strippers that contained solvents, such as methylene chloride. CPSC was concerned that the limited toxicity database on DBEs would not adequately support claims regarding their safety and certain gaps in the DBEs toxicity database prevented a comparison of its risks with other paint stripper products.

To help CPSC address these data needs, EPA implemented a procedure it had previously developed under the authority of section 4 of TSCA (15 U.S.C. 2603) to obtain needed testing through the development of an ECA (See 40 CFR part 790). In a notice published in the **Federal Register** of March 22, 1995 (60 FR 15143) (FRL–4943–6), EPA set forth its and CPSC's concerns for DBE's toxicity and exposure, indicated the type of testing that EPA and CPSC believed was needed to address data gaps, and solicited proposals from parties interested in conducting DBE toxicity testing under the terms of an ECA. In response, the Dibasic Esters Group (DBEs Group), comprised of Aceto Corporation, E.I. du Pont de Nemours and Company, and Solutia, Inc., provided EPA with a database of health effects studies that had been conducted previously on DBEs, indicated its interest in conducting additional needed health effects testing, and submitted a testing proposal[1]. While the DBEs Group's initial proposal did not meet the expectations of EPA and CPSC, a second proposal submitted by the DBEs Group, while not addressing all data needs initially identified by EPA and CPSC particularly with regard to a cancer bioassay and a 2-generation reproductive toxicity study, was found to constitute an adequate basis for entering into negotiation of an ECA. Following an announcement in the **Federal Register** of December 20, 1996 (61 FR 67332) (FRL–5578–9) EPA held a public meeting on January 29, 1997, in Washington, DC and began negotiation of an ECA addressing DBE toxicity testing.

B. What Does the DBEs ECA Require?

The ECA and a consent order incorporating the ECA were announced in the **Federal Register** of August 5, 1999 (64 FR 42692) (FRL–6090–6). The testing program set forth in the ECA consisted of three phases. The first phase (initial base toxicity testing) focused on testing individual DBEs and DBE mixtures and included:

[1] On February 4, 2003, E. I. DuPont de Nemours and Company notified EPA that it had transferred its DBEs business and test sponsorship responsibilities under the ECA to DuPont Textiles and Interiors. On July 23, 2004, DuPont Textile and Interiors notified EPA that it had transferred its DBEs business and obligations under the ECA to INVISTA S.á r.l., a subsidiary of Koch Industries. Constituting minor modifications of the ECA, both notifications included ECA signatures pages that had been endorsed by their respective company officials.

• A 90-day subchronic inhalation toxicity study.
• A 14-day dermal toxicity study.
• Genotoxicity (gene mutation and chromosomal effects) studies.

The second phase (program review testing) consisted of:
• A developmental toxicity study.
• An *in vitro* dermal penetration study.

Test results from the first and second phases are contained in the docket for this testing action. Whether or not a third phase of testing would be required that would focus on *in vivo* dermal penetration rate testing is to be determined by EPA, with input from CPSC, after its review of the program's test results, recommendations submitted by the DBEs Group and any comments received from the public in response to this notice.

C. What Did the DBEs Group Recommend Regarding Phase 3 Testing?

Following the submission of test results obtained under phase 2 testing, the DBEs Group submitted its recommendation in a letter dated May 14, 2003, arguing that *in vivo* dermal penetration rate testing was not needed (See Dibasic Esters Group. Letter concerning the need for additional dermal studies involving DBEs submitted to the TSCA Public Docket Office, EPA May 14, 2003). The DBEs Group stated the following in support of its position: ''Since the 14-day dermal study confirmed a lack of systemic toxicity in rats, and given that the *in vitro* dermal study established that DBEs, when applied alone as a single solvent system or as part of a 1:3:1 blend [DMS:DMG:DMA], penetrated rat skin significantly faster compared to human skin, the DBEs Group has concluded that it is unnecessary to conduct additional dermal experiments with DBEs. The DBEs Group does recognize that had systemic toxicity been noted in the 14-day dermal study, accompanied by target organ effects, an *in vivo* dermal study using radio[-]labeled DBE could be justified, exclusive of the *in vitro* dermal penetration rate differences reported for rat and human skin.''

III. What Will Occur Once Program Review Has Been Completed?

The primary outcome of the program review will be an EPA decision on whether or not the DBEs Group should proceed to sponsor *in vivo* dermal penetration rate testing, and, if so, the specific protocol that would be followed in such testing, including the identification of the DBEs or DBE mixture to be studied. On completing its review, including the consideration of comments submitted in response to this notice, EPA will notify the DBEs Group of its decision regarding phase 3 testing by letter, which will also be entered in the public docket.

Accordingly, EPA specifically requests public comment on the need for, and, if there is thought to be a need, the specific nature of, *in vivo* dermal penetration rate testing for individual DBEs or mixtures of DBE. Comments that support such testing should provide a clear rationale for such testing and specify how the testing should be conducted, identifying test species and target organ(s), if appropriate. EPA understands that the 1:3:1 [DMS:DMG:DMA] blend of DBEs is a mixture common to many DBE-containing consumer products and industrial solvent products and was the subject of some of the tests conducted under the first two phases of ECA testing.

List of Subjects

Environmental protection, Chemicals, Hazardous substances, Reporting and recordkeeping requirements.

Dated: August 10, 2005.

Linda Gerber,

Acting Director, Chemical Control Division, Office of Pollution Prevention and Toxics.

[FR Doc. 05–16297 Filed 8–16–05; 8:45 am]

BILLING CODE 6560–50–S

FEDERAL COMMUNICATIONS COMMISSION

[Report No. 2724]

Petitions for Reconsideration of Action in Rulemaking Proceeding

August 4, 2005.

Petitions for Reconsideration have been filed in the Commission's Rulemaking proceeding listed in this Public Notice and published pursuant to 47 CFR 1.429(e). The full text of these documents is available for viewing and copying in Room CY–B402, 445 12th Street, SW., Washington, DC or may be purchased from the Commission's copy contractor, Best Copy and Printing, Inc. (BCPI) (1–800–378–3160). Oppositions to these petitions must be filed by September 1, 2005. See Section 1.4(b)(1) of the Commission's rules (47 CFR 1.4(b)(1)). Replies to an opposition must be filed within 10 days after the time for filing oppositions have expired.

Subject: In the Matter of the Development of Operational, Technical and Spectrum Requirements for Meeting Federal, State and Local Public Safety Communications Requirements through the year 2010 (WT Docket 96–86).

In the Matter of Petition for Waiver of the Part 15 UWB Regulations Filed by the Multi-band OFDM Alliance Special Interest Group (ET Docket 04–352)

Number of Petitions Filed: 2.

Marlene H. Dortch,

Secretary.

[FR Doc. 05–16333 Filed 8–16–05; 8:45 am]

BILLING CODE 6712–01–U

FEDERAL MARITIME COMMISSION

Notice of Agreements Filed

The Commission hereby gives notice of the filing of the following agreements under the Shipping Act of 1984. Interested parties may obtain copies of agreements by contacting the Commission's Office of Agreements at 202–523–5793 or via e-mail at *tradeanalysis@fmc.gov*. Interested parties may submit comments on an agreement to the Secretary, Federal Maritime Commission, Washington, DC 20573, within 10 days of the date this notice appears in the **Federal Register**.

Agreement No.: 011383–040.
Title: Venezuelan Discussion Agreement.
Parties: Hamburg-Süd, Seaboard Marine Ltd., King Ocean Service de Venezuela, and SeaFreight Line.
Filing Party: Wayne R. Rohde, Esq.; Sher & Blackwell LLP; 1850 M Street, NW., Suite 900; Washington, DC 20036.
Synopsis: The amendment adds provisions dealing with specific liability for penalties, financial security, and dispute resolution.

Agreement No.: 011550–011.
Title: ABC Discussion Agreement.
Parties: A.P. Moller-Maersk A/S, Hamburg-Süd, King Ocean Services Limited, and SeaFreight Line.
Filing Party: Wayne R. Rohde, Esq.; Sher & Blackwell LLP; 1850 M Street, NW., Suite 900; Washington, DC 20036.
Synopsis: The amendment adds provisions dealing with specific liability for civil penalties and dispute resolution.

Agreement No.: 011673–001.
Title: Space Charter Agreement Between Kambara Kisen Co., Ltd. and Mariana Express Lines Limited.
Parties: Kambara Kisen Co., Ltd. and Mariana Express Lines Limited.
Filing Parties: Charles L. Coleman, III, Esq.; Holland & Knight LLP; 50 California Street, Suite 2800; San Francisco, CA 94111.
Synopsis: The amendment reduces the number of slots the parties will exchange and updates Mariana Express's address.

Agreement No.: 011705–004.
Title: Grand Alliance-Americana Atlantic Agreement.
Parties: Hapag-Lloyd Container Line GmbH; Nippon Yusen Kaisha; Orient Overseas Container Line Limited, Orient Overseas Container Line, Inc., and Orient Overseas Container Line (Europe) Limited (acting as one party); P&O Nedlloyd Limited/P&O Nedlloyd BV; and CP Ships USA, LLC.
Filing Party: Wayne R. Rohde, Esq.; Sher & Blackwell LLP; 1850 M Street, NW., Suite 900; Washington, DC 20036.
Synopsis: The amendment changes Lykes Lines Limited, LLC's name to CP Ships USA, LLC; deletes TMM Lines Limited, LLC as a party; deletes obsolete language; changes the name of the agreement to the Grand Alliance-CP Ships Atlantic Agreement; and restates the agreement.

Agreement No.: 011798–003.
Title: Atlantic Space Charter Agreement.
Parties: Hapag-Lloyd Container Line; Nippon Yusen Kaisha; Orient Overseas Container Line Limited; Orient Overseas Container Line (Europe) Limited; Orient Overseas Container Line Inc.; P&O Nedlloyd Limited; P&O Nedlloyd B.V.; CP Ships USA LLC; COSCO Container Lines Company, Ltd.; Kawasaki Kisen Kaisha, Ltd; Yang Ming (UK) Ltd.
Filing Counsel: Wayne R. Rohde, Esq.; Sher & Blackwell LLP; 1850 M Street, NW., Suite 900; Washington, DC 20036.
Synopsis: The amendment changes Lykes Lines' name to CP Ships USA, LLC and deletes TMM Lines as a party.

Dated: August 12, 2005.

By Order of the Federal Maritime Commission.

Bryant VanBrakle,

Secretary.

[FR Doc. 05–16317 Filed 8–16–05; 8:45 am]

BILLING CODE 6730–01–U

FEDERAL RESERVE SYSTEM

Notice of Proposals to Engage in Permissible Nonbanking Activities or to Acquire Companies that are Engaged in Permissible Nonbanking Activities

The companies listed in this notice have given notice under section 4 of the Bank Holding Company Act (12 U.S.C. 1843) (BHC Act) and Regulation Y (12 CFR Part 225) to engage *de novo*, or to acquire or control voting securities or assets of a company, including the companies listed below, that engages either directly or through a subsidiary or other company, in a nonbanking activity that is listed in § 225.28 of Regulation Y (12 CFR 225.28) or that the Board has determined by Order to be closely related to banking and permissible for bank holding companies. Unless otherwise noted, these activities will be conducted throughout the United States.

Each notice is available for inspection at the Federal Reserve Bank indicated. The notice also will be available for inspection at the offices of the Board of Governors. Interested persons may express their views in writing on the question whether the proposal complies with the standards of section 4 of the BHC Act. Additional information on all bank holding companies may be obtained from the National Information Center website at *www.ffiec.gov/nic/*.

Unless otherwise noted, comments regarding the applications must be received at the Reserve Bank indicated or the offices of the Board of Governors not later than September 9, 2005.

A. Federal Reserve Bank of Minneapolis (Jacqueline G. King, Community Affairs Officer) 90 Hennepin Avenue, Minneapolis, Minnesota 55480-0291:

1. Frandsen Financial Corporation, Arden Hills, Minnesota; to acquire QCF Bancorp, Virginia, Minnesota, and thereby indirectly acquire Queen City Federal Savings Bank, Virginia, Minnesota, and engage in owning and operating a savings and loan association, pursuant to section 225.28(b)(4)(ii) of Regulation Y.

Board of Governors of the Federal Reserve System, August 11, 2005.

Robert deV. Frierson,

Deputy Secretary of the Board.

[FR Doc. 05–16249 Filed 8–16–05; 8:45 am]

BILLING CODE 6210–01–S

GENERAL SERVICES ADMINISTRATION

Office of Transportation and Property Management; The Third Annual AMSA and GSA Household Goods and Freight Forum

AGENCY: Federal Supply Service, General Services Administration

ACTION: Notice.

SUMMARY: The General Services Administration (GSA) will hold its third annual Household Goods and Freight Forum on February 22—23, 2006 at the Hyatt Regency, Orange County, Garden Grove (Anaheim) California. This event is co-sponsored by the American Moving and Storage Association (AMSA). *Creating Best Value Solutions* is the theme for this 2006 transportation forum. GSA and its partners have planned educational and instructive sessions. Join Traffic Managers, Relocation Specialists, Freight Specialists, Financial Analysts, Contracting Officers, Transportation Policy Specialists, Administrative Support Personnel, and others managing or impacting transportation and relocation processes within their organizations. Receive the most recent training on freight and household goods transportation issues, relocations changes and updates, and technology enhancements. Also learn more about GSA's proposed rule that requires employees whose duties involve procuring transportation services (including rate tender procurements) to be properly certified and authorized in writing to obligate government funds. Attendees will have the opportunity to interface with industry leaders and government experts. Find solutions that create best value for your organization and hear how other agencies were able to achieve this goal within their organizations. The vendor exhibits will feature the latest technology, products, and services. Federal agencies may learn more about the Household Goods and Freight Forum and register at *http://www.gsa.gov/hhgfrtforum.* Industry registration is at *www.promover.org.*

FOR FURTHER INFORMATION CONTACT: Lynn Ju, Federal Supply Services, at (703) 605–2889, or by email to *lynnette.ju@gsa.gov.*

Dated: August 8, 2005.

Scott Tiedt,

Chief, Transportation Program Branch.

[FR Doc. 05–16318 Filed 8–16–05; 8:45 am]

BILLING CODE 6820–89–S

DEPARTMENT OF HEALTH AND HUMAN SERVICES

Centers for Disease Control and Prevention

National Institute for Occupational Safety and Health; Meetings

The National Institute for Occupational Safety and Health (NIOSH) of the Centers for Disease Control and Prevention (CDC) announces the following public meeting and request for information:

Name: NIOSH Occupational Energy Research Program Information Sharing Meeting.

Date and Time: October 27, 2005; 9 a.m.–5 p.m.

Place: Washington Court Hotel, 525 New Jersey Avenue NW., Washington, DC 20001.

Status: Meeting is open to the public, limited only by the space available.

Background: NIOSH has been conducting an occupational epidemiologic research program addressing potential long term health effects of working in the Department of Energy (DOE) nuclear weapons complex under a series of Memoranda of Understanding (MOUs) with DOE. Establishment of this research program began following recommendations of a Secretarial Panel for the Evaluation of Epidemiologic Research Activities (SPEERA) for the U.S. Department of Energy in 1990. Input from various stakeholders has been sought since the program's inception including organized labor, current and former workers, DOE site management and contractors, DOE headquarters, academic research partners, the occupational safety and health community, various governmental agencies, and the general public. A document entitled: Agenda for HHS Public Health Activities (For Fiscal Years 2005–2010) at U.S. Department of Energy Sites is accessible at *http://www.cdc.gov/niosh/pdfs/hhsdoe_2005–2010–2.pdf* and includes information on completed, ongoing, and proposed occupational epidemiologic research activities under the DOE–DHHS MOU.

Purpose: This meeting will provide an overview of recently completed work conducted under the MOU, outline ongoing research activities, summarize findings and follow-up from a NIOSH public meeting held July 2004 addressing chronic lymphocytic leukemia radiogenic research, and discuss plans for future research. Attendees will have opportunities for questions and oral commentary on this NIOSH research program. Stakeholder feedback and the opportunity to update stakeholders on this research program are two primary objectives of the meeting. Written comments will be accepted at the meeting and may also be sent to the address for the NIOSH Health-Related Energy Research Branch below.

The agenda for this meeting is currently being developed. Stakeholders interested in attending may request additional information from the contact person identified below. Written comments may also be submitted to the address below until November 1, 2005.

Contact Person for More Information: Ms. Patty Gudlewski may be contacted at 513–841–4419 or by e-mail at *PGudlewski@cdc.gov.*

Addresses: Written requests for meeting information may be sent to Ms. P. Gudlewski; NIOSH–HERB; Mailstop R–44; 4676 Columbia Parkway; Cincinnati, OH 45226. Written comments should be sent to the attention of Dr. Steven Ahrenholz at the same NIOSH mailing address or may be e-mailed to him at *SAhrenholz@cdc.gov.*

The Director, Management Analysis and Services Office, has been delegated the authority to sign **Federal Register** notices pertaining to announcements of meetings and other committee management activities for both the Centers for Disease Control and Prevention and the Agency for Toxic Substances and Disease Registry.

Dated: August 10, 2005.

Alvin Hall,

Director, Management Analysis and Services Office, Centers for Disease Control and Prevention.

[FR Doc. 05–16257 Filed 8–16–05; 8:45 am]

BILLING CODE 4163–18–P

DEPARTMENT OF HEALTH AND HUMAN SERVICES

Food and Drug Administration

[Docket No. 2005N–0120]

Agency Information Collection Activities; Submission for Office of Management and Budget Review; Comment Request; Experimental Study of Carbohydrate Content Claims on Food Labels

AGENCY: Food and Drug Administration, HHS.

ACTION: Notice.

SUMMARY: The Food and Drug Administration (FDA) is announcing that a proposed collection of information has been submitted to the Office of Management and Budget (OMB) for review and clearance under the Paperwork Reduction Act of 1995.

DATES: Fax written comments on the collection of information by September 16, 2005.

ADDRESSES: OMB is still experiencing significant delays in the regular mail, including first class and express mail, and messenger deliveries are not being accepted. To ensure that comments on the information collection are received, OMB recommends that comments be faxed to the Office of Information and Regulatory Affairs, OMB, Attn: Fumie Yokota, Desk Officer for FDA, FAX: 202–395–6974.

FOR FURTHER INFORMATION CONTACT: Peggy Robbins, Office of Management Programs (HFA–250), Food and Drug Administration, 5600 Fishers Lane, Rockville, MD 20857, 301–827–1223.

SUPPLEMENTARY INFORMATION: In compliance with 44 U.S.C. 3507, FDA has submitted the following proposed collection of information to OMB for review and clearance.

Experimental Study of Carbohydrate Content Claims on Food Labels

The authority for FDA to collect the information for this experimental study derives from the Commissioner of Food and Drugs' authority, as specified in section 903(d)(2) of the Federal Food, Drug, and Cosmetic Act (the act) (21 U.S.C. 393(d)(2)).

The Nutrition Labeling and Education Act of 1990 (Public Law 101–535) amended the act. Section 403(r)(1)(A) of the act (21 U.S.C. 343(r)(1)(A)) was added under these amendments. This section states that a food is misbranded if it is a food intended for human consumption which is offered for sale and for which a claim is made on its label or labeling that expressly or implicitly characterizes the level of any nutrient of the type required to be declared as part of nutrition labeling, unless such claim uses terms defined in regulations by FDA under section 403(r)(2)(A) of the act.

In 1993, FDA published regulations that implemented the 1990 amendments. Among these regulations, § 101.13 (21 CFR 101.13) sets forth general principles for nutrient content claims (see 56 FR 60421, November 27, 1991, and 58 FR 2302, January 6, 1993). Other regulations in subpart D of part 101 (21 CFR part 101, subpart D) define specific nutrient content claims, such as ''free,'' ''low,'' ''reduced,'' ''light,'' ''good source,'' ''high,'' and ''more'' for different nutrients and calories, and identify several synonyms for each of the defined terms. In addition, § 101.69 (21 CFR 101.69) establishes the procedures and requirements for petitioning the agency to authorize nutrient content claims.

The Food and Drug Administration Modernization Act of 1997 (Public Law 105–115) amended section 403(r)(2) of the act by adding sections 403(r)(2)(G) and (r)(2)(H) to permit nutrient content claims based on published authoritative statements by a scientific body when FDA is notified of such claims in accordance with the requirements established in these sections.

Current FDA regulations make no provision for the use of nutrient content claims that characterize the level of carbohydrate in foods because FDA has not defined, by regulation, terms for use in such claims. FDA has been petitioned to amend existing food labeling regulations to define terms for use in nutrient content claims characterizing the level of carbohydrate in foods.

The purpose of this proposed data collection is to help enhance FDA's understanding of consumer response to carbohydrate content claims on food labels. More specifically, this experimental study will help answer the following research questions:

1. Does the presence of a given front panel carbohydrate content claim suggest to consumers that the product is lower or higher in total carbohydrate, calories, and other nutrients (i.e., total fat, fiber, and protein) than the same product without the claim or with a different claim?

2. Does the presence of a given front panel carbohydrate content claim suggest to consumers who do not view the Nutrition Facts panel that the food is healthier or otherwise more desirable than the same product without the claim or with a different claim?

3. Does the presence of a front panel carbohydrate content claim suggest to consumers that the product is healthier than the same product without a claim or with a different claim despite information to the contrary available on the Nutrition Facts panel?

4. Do disclosure statements help consumers to draw appropriate conclusions about products with carbohydrate content claims on the front panel?

The label claims that would be tested in the proposed study include ''carb-free,'' ''low carb,'' ''x g net carbs,'' ''carbconscious,'' ''good source of carb,'' and ''excellent source of carb.'' The study would also include control labels (labels not bearing a claim). Where relevant, this study would test carbohydrate content claims with and without the following disclosure statements: (1) ''see nutrition information for fat content,'' (2) ''see nutrition information for sugar content,'' and (3) ''not a low calorie food.''

Participants would see mock food label images for one of the following three products: (1) A loaf of bread, (2) a can of soda, and (3) a frozen entree. Three products were selected to understand whether consumer perception of carbohydrate content claims changes when the food is a traditionally high-carbohydrate, ubiquitous staple (bread), a beverage (soda), or a complete meal (frozen entree).

Half of the participants would see only a front panel with a carbohydrate content claim or a control label not bearing a claim. The other half of the participants would see both the front panel and the back panel, which includes the Nutrition Facts information. In the Nutrition Facts panel for the bread and frozen entree, the calorie, fat, and fiber content would vary to create more and less healthful product profiles. Total carbohydrate content would also vary. On the Nutrition Facts panel for the soda, the sugar content, and therefore total carbohydrate content and calories, would vary.

The proposed experimental study would be conducted online via the Internet. The sample would be drawn from an existing consumer opinion panel developed and maintained by the research firm Synovate. Synovate's Internet panel consists of 600,000 households that have agreed to participate in research studies conducted through the Internet.

Panel members are recruited by a variety of means designed to reflect all segments of the population. They are required to have a computer with Internet access. Typical panel members receive three or four invitations per month to participate in research projects. Periodically, Synovate gives incentives of small monetary value to panel members for their participation. Studies begin with an e-mailed invitation to the sampled respondents.

For this proposed study, Synovate's Internet panel would be screened for diet status. Twenty-five percent of the households in the Internet panel (150,000 households) are expected to respond to the screening questions. Based on information gathered from the screening process, a sample would be drawn to allow for 2,500 participants in each of 4 groups: (1) Diabetic consumers, (2) consumers who try to eat a diet low in carbohydrate (but who are not diabetic), (3) consumers who try to eat a diet high in carbohydrate, and (4) consumers who are not part of any of the preceding three groups. Assignment to a condition would be random within each of the four groups of consumers. Of the members of the Internet panel who respond to the screening questions and are selected for the study (18,200 panel members), 55 percent (10,000 panel members) are expected to participate in the experiment.

In the **Federal Register** of April 8, 2005 (70 FR 18032), FDA published a 60-day notice requesting public comment on the information collection provisions. FDA received eight comments on this proposed data collection. The first comment was from a citizen; the second was from National Starch Food Innovation; the third was from The Sugar Association; the fourth was from the American Dietetic Association; the fifth was from the Grocery Manufacturers of America; the sixth was one combined comment from the Grain Foods Foundation, Wheat Foods Council, North American Millers' Association, and the American Bakers Association; and both the seventh and eighth comments were from the Calorie Control Council.

The first comment is related to the validity of the methodology and assumptions used by FDA. The comment indicated that the sample size for the study is 150,000 households and that this sample is too large.

The sample for this study is not households, and it is not 150,000. The sample size for the study is 10,000 consumers. FDA needs this sample size to conduct sub-analyses within four different groups: Consumers who are diabetic, nondiabetics who are limiting their carbohydrates, consumers who are trying to consume foods high in carbohydrate, and consumers in none of the previous categories. To identify an adequate number of consumers from each of these groups for meaningful sub-analyses, FDA will need to screen the full Synovate Internet panel, but will not be using the full panel for the study itself. The screening will be conducted in the context of a quarterly multi-topic survey that Synovate e-mails to all of its Internet panel members. This data collection proposes to include three very brief diet status screening questions on one of Synovate's multi-topic surveys. These questions would take no more than 36 seconds to complete. Based on Synovate's previous experience with this panel, 150,000 panel members should reply to the screening questions. The sample for this proposed data collection would be drawn from the estimated 150,000 responses to the screening questions. The sample would include roughly 18,000 consumers, of which FDA projects that 10,000 will complete the study.

The second comment addresses ways to enhance the quality, utility, and clarity of the information to be collected. The comment argues that the term total carbohydrate should be changed to exclude fiber. The change suggested by the comment would make testing a ''net carbohydrate'' statement unnecessary. The commenter would like this proposed data collection to include a condition in which total carbohydrate is defined with fiber excluded.

The agency's goal for this proposed data collection is to better understand how consumers perceive a variety of front panel carbohydrate content claims and related statements. Testing consumer response to new definitions for total carbohydrate on the Nutrition Facts Panel is outside the scope of this data collection.

The third comment is related to whether this study would have practical utility and also poses questions and offers ways to enhance the quality, utility, and clarity of the information to be collected. The comment states that there is no evidence that carbohydrate should be restricted and therefore no need to amend current regulations to allow carbohydrate content claims on food labels. The comment argues that, by extension, there is no need for the proposed data collection.

The agency disagrees that the study should not be undertaken. FDA has received petitions asking the agency to amend existing regulations to permit carbohydrate content claims on food labels. This proposed data collection would be used to enhance the agency's understanding of consumer response to such claims and, therefore, provide context for the agency's response to the petitions.

The third comment also addresses four methodological issues as follows: (1) The comment argues that respondents should evaluate several aspects of the products included in the study and that respondents should evaluate the test products relative to similar products; (2) This comment questions whether the study can demonstrate whether consumers making real-life nutrition decisions would review the Nutrition Facts information when the front panel includes a carbohydrate content claim; (3) The comment argues that understanding consumer response to qualifying information on the front panel is important because products may be reformulated to meet guidelines for a carbohydrate content claim. The reformulated products may make substitutions, like removing sugar and adding fat. The comment argues that equally prominent information related to modifications is important to ensure consumers are not misled. The comment suggests a statement such as ''Reduced carbohydrate, ____% fewer calories, ____% more fat;'' and (4) The comment suggests that the study should evaluate consumer response to carbohydrate content claims based on modifications to serving size.

In response to the methodological issues raised in the third comment the following will occur: (1) The proposed study questions do ask respondents to evaluate several aspects of the test product and to consider the test product relative to another, similar product; (2) Several design features will help the agency understand whether consumers might take into consideration information that is not part of the front panel. The proposed data collection is designed to evaluate the response to carbohydrate content claims with consumers who only have access to the front panel compared to responses to the same questions from consumers who have access to both the front panel and the full Nutrition Facts information. Among test conditions, the product profiles presented on the Nutrition Facts Panel will vary. Some respondents will see a product with a carbohydrate content claim on the front and Nutrition Facts information for a more healthful product. Others will see the same package design, with the same claim, but the Nutrition Facts information will be for a less healthful product; (3) The proposed study is designed to evaluate consumer response to claims when the front panel also includes a disclosure statement and when it does not include such a statement. The statements included in the study would be ''see nutrition information for fat content,'' ''see nutrition information for sugar content,'' and ''not a low-calorie food.'' These statements will appear on the test labels with the prominence defined in regulation (21 CFR 101.13(h)(4)(i)); (4) Modifications to serving size do not drive consumer understanding of the claims themselves and are outside the scope of this data collection.

The fourth comment expresses agreement with the objectives and research questions associated with this data collection. The comment then addresses ways to enhance the utility of the information collected. The comment requests that FDA's consumer research on labeling issues be more general, rather than focused on one nutrient. The comment also suggests that consumer research include in-person observation in actual-use settings.

FDA believes that it is necessary for this study to focus on carbohydrate claims, rather than on labeling issues in general, in order to best inform the agency about how consumers may react to these content claims on food labels. Total carbohydrate claims are unique from other nutrient content claims for two reasons. First, petitioners have requested authorization for both ''low'' and ''good source'' claims for total carbohydrate. Currently, no nutrient is authorized for both ''low'' and ''good source'' claims. Second, the 2005 U.S. Dietary Guidelines provide recommendations to consumers related to types of carbohydrate to choose and other types of carbohydrate to limit. For example, the Guidelines recommend that consumers choose fiber-rich produce and whole grains often and that they limit foods with added sugar or caloric sweeteners. Although FDA has not authorized nutrient content claims for total carbohydrates, consumers already find claims for certain types of carbohydrate in the marketplace, such as ''sugar-free'' and ''good source of fiber.'' To gather meaningful data, the sample for this study, the foods included as stimuli, and the label claims must be specific to the issues surrounding carbohydrate content labeling. Many questions included in the study protocol, however, may be appropriate for other labeling studies.

Conducting this study in-person in actual-use settings would not be practical and poses methodological challenges. Consumers use labels while shopping, at home, and in other settings. Collecting data in these settings with an adequate sample for the proposed analysis would increase the costs of the study and increase respondent burden. In addition, consumers may alter their typical behavior when being tracked by a data collector while shopping or being watched in their home as they prepare foods. The methodology proposed for this study is appropriate for meeting the research objective of evaluating how consumers react to different labeling alternatives for carbohydrate content claims. The study design and performance tasks selected will require consumers to make judgments based on content claims and other nutrition facts. The statistical analysis of the data will determine whether carbohydrate labeling options provide consumers with the information needed to make accurate decisions.

The fifth comment addresses ways to enhance the quality, utility, and clarity of the information to be collected. The comment suggests that the questions included in the protocol be straightforward and specific. The comment expresses concern about using terms like ''healthier'' or ''more desirable.'' The comment recommends that the study labels include disclosure statements for fat only when the nutrition profile of the product would require such a statement under the current regulations. The comment disagrees with the testing of a sugar disclosure due to the lack of a daily value for sugar on which to base such a statement. The comment also expresses support for testing carbohydrate content claims with a ''not a low calorie food'' disclosure, but considers a declaration of calories per serving or ''see nutrition information for calorie content'' better options to emphasize the importance of calories. Finally, the comment requests that the agency make available the definitions of the carbohydrate claims prior to conducting this study. The agency

agrees that the questions should be straightforward and specific and designed them with those objectives in the forefront. The terms ''healthier'' and ''more desirable'' are not included among the study questions. Use of a fat content disclosure statement in this study will be consistent with current regulations (21 CFR 101.13(h)(1)). The sugar disclosure used in this proposed study would accompany a ''good source of carb'' claim. In the study, the disclosure would appear on a product with ''good source of carb'' on the front panel and information in the Nutrition Facts box that indicates that most of the carbohydrate in the product is sugars. The goal of this test is to better understand how consumers react to a ''good source of carb'' claim on a product high in sugar and low in other carbohydrates. The agency disagrees with the comment's suggestion to test a declaration of calories per serving or ''see nutrition information for calorie content'' in lieu of ''not a low calorie food.'' The agency considers the statement ''not a low calorie food'' to be an appropriate, explicit statement to make consumers more aware of calories. The disclosure ''not a low calorie food'' is currently seen by consumers in the marketplace when ''sugar-free'' claims are made on products that are not low calorie. The experimental study looks at ranges of carbohydrate content levels for the products to explore differences in consumer reaction.

The sixth comment argues that the study methods are sound and suggests ways to enhance quality, utility, and clarity of the information to be collected. The comment suggests substituting the soda and frozen dinner stimuli with pasta, cereal, orange juice or any fruit. The comment does not offer a reason for these preferences. The comment also proposes testing white bread and whole grain bread as separate products.

The three products proposed for this study were selected to understand whether consumer perception of carbohydrate content claims varies when the claim is on a label for a traditionally high-carbohydrate staple (bread), a beverage (soda), and a complete meal (frozen dinner). The agency does not agree that any of the substitutions suggested in the comment would improve the study. The label for the bread does not indicate whether it is white, wheat, or another grain. Consumers will view a label claim on the front panel for bread labeled simply ''home-style.'' Some of the respondents who view the Nutrition Facts Panel for the bread will see a higher-fiber, lower-fat bread, while others see a lower-fiber, higher-fat bread. The analysis will evaluate the differences in perception of the claims when the nutrient profile suggests a more healthful versus a less healthful product.

The seventh comment and eighth comments address the quality, utility, and clarity of the information to be collected. The comments request that this data collection test changes to the carbohydrate section of the Nutrition Facts Panel. One of these comments requests that fiber and sugar alcohols be listed separately from other carbohydrates. The other of the comments proposes moving carbohydrates with reduced caloric value from the carbohydrate listing on the Nutrition Facts Panel and adding a listing called ''low calorie ingredients,'' which would include the subheadings listings ''fiber'' and ''other.''

Evaluating any proposed changes to the Nutrition Facts Panel is outside the scope of this data collection. This data collection is designed to evaluate consumer understanding of carbohydrate claims on the front panel.

FDA estimates the burden of the collection of information as follows:

TABLE 1.—ESTIMATED ANNUAL REPORTING BURDEN[1]

Activity	No. of Respondents	Annual Frequency per Response	Total Annual Responses	Hours per Response	Total Hours
Cognitive Interviews	9	1	9	0.5	5
Pretest	150	1	150	0.17	26
Screener	150,000	1	150,000	0.01	1,500
Experiment	10,000	1	10,000	0.12	1,200
Total					2,731

[1]There are no capital costs or operating and maintenance costs associated with this collection of information.

These estimates are based on FDA's experience with previous consumer studies. The cognitive interviews are designed to ensure that the questions are worded as clearly as possible to consumers. The cognitive interviews would take each respondent 30 minutes to complete. The pretest of the final questionnaire is designed to minimize potential problems in the administration of the interviews. The pretest is predicted to take each respondent approximately 10 minutes to complete.

The screener would be sent via the Internet to the entire 600,000-household Internet panel, of which 25 percent (150,000 households) are predicted to respond. The brief screener is predicted to take each respondent 36 seconds to complete.

The experiment would be conducted with 10,000 panel members. The experiment is predicted to take each respondent approximately 7 minutes to complete.

Dated: August 9, 2005.

Jeffrey Shuren,

Assistant Commissioner for Policy.

[FR Doc. 05–16242 Filed 8–16–05; 8:45 am]

BILLING CODE 4160–01–S

DEPARTMENT OF HEALTH AND HUMAN SERVICES

Food and Drug Administration

[Docket Nos. 2005C–0302, 2005C–0303, and 2005C–0304]

CIBA Vision Corp.; Filing of Color Additive Petitions

AGENCY: Food and Drug Administration, HHS.

ACTION: Notice.

SUMMARY: The Food and Drug Administration (FDA) is announcing that CIBA Vision Corp. has filed three petitions proposing that the color additive regulations be amended to

provide for the safe use of Color Index (C.I.) Pigment Violet 19, C.I. Pigment Yellow 154, and C.I. Pigment Red 122 as color additives in contact lenses.

FOR FURTHER INFORMATION CONTACT:

Regarding CAPs 5C0278 and 5C0280: Celeste Johnston, Center for Food Safety and Applied Nutrition (HFS–265), Food and Drug Administration, 5100 Paint Branch Pkwy., College Park, MD 20740–3835, 301–436–1282.

Regarding CAP 5C0279: Harold Woodall, Center for Food Safety and Applied Nutrition (HFS–206), Food and Drug Administration, 5100 Paint Branch Pkwy., College Park, MD 20740–3835, 301–436–1259.

SUPPLEMENTARY INFORMATION: Under the Federal Food, Drug, and Cosmetic Act (sec. 721(d)(1) (21 U.S.C. 379e(d)(1))), notice is given that three color additive petitions (CAP 5C0278, Docket No. 2005C–0302; CAP 5C0279, Docket No. 2005C–0303; CAP 5C0280, Docket No. 2005C–0304) have been filed by CIBA Vision Corp., 11460 Johns Creek Pkwy., Duluth, GA 30097–1556. The petitions propose to amend the color additive regulations in 21 CFR part 73 to provide for the safe use of C.I. Pigment Violet 19 (CAP 5C0278), C.I. Pigment Yellow 154 (CAP 5C0279), and C.I. Pigment Red 122 (CAP 5C0280), as color additives in contact lenses.

The agency has determined under 21 CFR 25.32(l) that this action is of a type that does not individually or cumulatively have a significant effect on the human environment. Therefore, neither an environmental assessment nor an environmental impact statement is required.

Dated: July 22, 2005.

Laura M. Tarantino,

Director, Office of Food Additive Safety, Center for Food Safety and Applied Nutrition.

[FR Doc. 05–16332 Filed 8–16–05; 8:45 am]

BILLING CODE 4160–01–S

DEPARTMENT OF HEALTH AND HUMAN SERVICES

Food and Drug Administration

Request for Nominations for Voting Consumer Representative Members on Public Advisory Committees

AGENCY: Food and Drug Administration, HHS.

ACTION: Notice.

SUMMARY: The Food and Drug Administration (FDA) is requesting nominations for voting consumer representatives to serve on the National Mammography Quality Assurance Advisory Committee (NMQAAC) in the Center for Devices and Radiological Health (CDRH). FDA has a special interest in ensuring that women, minority groups, and individuals with disabilities are adequately represented on advisory committees and, therefore, encourages nominations of qualified candidates from these groups.

DATES: Nominations will be accepted through January 31, 2006.

ADDRESSES: All nominations should be sent to the contact person listed in the **FOR FURTHER INFORMATION CONTACT** section of this document.

FOR FURTHER INFORMATION CONTACT: Michael Ortwerth, Advisory Committee Oversight and Management Staff (HF–4), Food and Drug Administration, 5600 Fishers Lane, Rockville, MD 20857, e-mail: *Michael.Ortwerth@fda.gov*.

SUPPLEMENTARY INFORMATION: FDA is requesting nominations for voting consumer representatives to serve on the NMQAAC.

I. Functions of NMQAAC

The functions of the committee are to advise FDA on the following topics: (1) Developing appropriate quality standards and regulations for mammography facilities; (2) developing appropriate standards and regulations for bodies accrediting mammography facilities under this program; (3) developing regulations with respect to sanctions; (4) developing procedures for monitoring compliance with standards; (5) establishing a mechanism to investigate consumer complaints; (6) reporting new developments concerning breast imaging which should be considered in the oversight of mammography facilities; (7) determining whether there exists a shortage of mammography facilities in rural and health professional shortage areas and determining the effects of personnel on access to the services of such facilities in such areas; (8) determining whether there will exist a sufficient number of medical physicists after October 1, 1999; and (9) determining the costs and benefits of compliance with these requirements.

II. Criteria for Members

Persons nominated for membership on the committee as a consumer representative must meet the following criteria: (1) Must be from among national breast cancer or consumer health organization with expertise in mammography, (2) be able to analyze technical data, (3) understand research design, (4) discuss benefits and risks, and (5) evaluate the safety and efficacy of products under review. The consumer representative must be able to represent the consumer perspective on issues and actions before the advisory committee; serve as a liaison between the committee and interested consumers, associations, coalitions, and consumer organizations; and facilitate dialogue with the advisory committees on scientific issues that affect consumers.

III. Selection Procedures

Selection of members representing consumer interests is conducted through procedures that include use of organizations representing the public interest and consumer advocacy groups. The organizations have the responsibility of recommending candidates of the agency's selection.

IV. Nomination Procedures

All nominations must include a cover letter, a curriculum vita or resume (which should include nominee's office address, telephone number, and e-mail address), and a list of consumer or community-based organizations for which the candidate can demonstrate active participation.

Any interested person or organization may nominate one or more qualified persons for membership on the NMQAAC to represent consumer interests. Self-nominations are also accepted. Nominations shall include complete curriculum vitae of each nominee, current business address and telephone number, and shall state that the nominee is aware of the nomination, is willing to serve as a member, and appears to have no conflict of interest that would preclude membership. FDA will ask the potential candidates to provide detailed information concerning such matters as financial holdings, employment, and research grants and/or contracts to permit evaluation of possible sources of conflict of interest. The term of office is up to 4 years, depending on the appointment date.

This notice is issued under the Federal Advisory Committee Act (5 U.S.C. app. 2) and 21 CFR part 14, relating to advisory committees.

Dated: August 10, 2005.

Scott Gottlieb,

Deputy Commissioner for Policy.

[FR Doc. 05–16330 Filed 8–16–05; 8:45 am]

BILLING CODE 4160–01–S

DEPARTMENT OF HEALTH AND HUMAN SERVICES

Food and Drug Administration

[Docket No. 2005N–0137]

Levothyroxine Sodium Therapeutic Equivalence; Public Meeting; Reopening of Comment Period

AGENCY: Food and Drug Administration, HHS.

ACTION: Notice of public meeting; reopening of comment period.

SUMMARY: The Food and Drug Administration (FDA) is reopening until September 23, 2005, the comment period for the May 23, 2005, public meeting on the therapeutic equivalence of levothyroxine sodium drug products that was announced in the **Federal Register** of April 20, 2005 (70 FR 20574). The public meeting included FDA staff and representatives of three medical societies: The American Thyroid Association (ATA), the Endocrine Society, and the American Association of Clinical Endocrinologists (AACE). FDA is taking this action in response to a request for an extension.

DATES: Submit written or electronic comments on or before September 23, 2005.

ADDRESSES: Submit written comments to the Division of Dockets Management (HFA–305), Food and Drug Administration, 5630 Fishers Lane, rm. 1061, Rockville, MD 20852. Submit electronic comments to *http://www.fda.gov/dockets/ecomments*.

FOR FURTHER INFORMATION CONTACT: Rose Cunningham, Center for Drug Evaluation and Research (HFD–006), Food and Drug Administration, 5600 Fishers Lane, Rockville, MD 20852, 301–443–5595, e-mail: *cunninghamr@cder.fda.gov*.

SUPPLEMENTARY INFORMATION:

I. Background

On May 23, 2005, FDA cosponsored a public meeting on the therapeutic equivalence of levothyroxine sodium drug products. The meeting included FDA staff and representatives of three medical societies: The ATA, the Endocrine Society, and the AACE. The purpose of the meeting was to discuss FDA's regulatory standards and methodological approaches for determining therapeutic equivalence between levothyroxine sodium drug products. FDA asked interested constituencies, including patient advocacy and education groups, and pharmaceutical sponsors, to submit comments by July 23, 2005.

By letter dated July 6, 2005, Abbott Laboratories (Abbott) requested that FDA extend the date for submission of comments. Abbott requested the extension to give interested parties the opportunity to comment meaningfully on the matters discussed at the meeting. The transcript became available on July 12, 2005.

FDA has decided to reopen the comment period until September 23, 2005.

II. Comments

Interested persons may submit to the Division of Dockets Management (see **ADDRESSES**) written or electronic comments on the topics discussed at the May 23, 2005, meeting. Submit two copies of mailed comments, except that individuals may submit one paper copy. Comments are to be identified with the docket number found in brackets in the heading of this document. Received comments are available for public examination in the Division of Dockets Management between 9 a.m. and 4 p.m., Monday through Friday.

III. Transcript

The transcript of the May 23, 2005, meeting is available on FDA's Web site at *http://www.fda.gov/cder/meeting/levothyroxine2005.htm*.

Dated: August 10, 2005.

Jeffrey Shuren,

Assistant Commissioner for Policy.

[FR Doc. 05–16241 Filed 8–16–05; 8:45 am]

BILLING CODE 4160–01–S

DEPARTMENT OF HEALTH AND HUMAN SERVICES

Food and Drug Administration

Oncologic Drugs Advisory Committee; Notice of Meeting

AGENCY: Food and Drug Administration, HHS.

ACTION: Notice.

This notice announces a forthcoming meeting of a public advisory committee of the Food and Drug Administration (FDA). The meeting will be open to the public.

Name of Committee: Oncologic Drugs Advisory Committee.

General Function of the Committee: To provide advice and recommendations to the agency on FDA's regulatory issues.

Date and Time: The meeting will be held September 13, 2005, from 8 a.m. to 5 p.m. and on September 14, 2005, from 8 a.m. to 5 p.m.

Location: Holiday Inn, The Ballrooms, 8120 Wisconsin Ave., Bethesda, MD.

Contact Person: Johanna M. Clifford, Center for Drug Evaluation and Research (HFD–21), Food and Drug Administration, 5600 Fishers Lane (for express delivery, 5630 Fishers Lane, rm. 1093), Rockville, MD 20857, 301–827–7001, FAX: 301–827–6776, e-mail: *cliffordj@cder.fda.gov*, or FDA Advisory Committee Information Line, 1–800–741–8138 (301–443–0572 in the Washington, DC area), code 3014512542. Please call the Information Line for up-to-date information on this meeting. When available, background materials for this meeting will be posted 1 business day before the meeting on FDA's Web site at *http://www.fda.gov/ohrms/dockets/ac/acmenu.htm*. (Click on the year 2005 and scroll down to Oncologic Drugs Advisory Committee.)

Agenda: On September 13, 2005, the committee will discuss the following: (1) New drug application (NDA) 21–491, proposed trade name XINLAY (atrasentan hydrochloride) Capsules, Abbott Laboratories, proposed indication for the treatment of men with metastatic hormone-refractory prostate cancer; and (2) NDA 21–743, S003, TARCEVA (erlotinib) Tablets, OSI Pharmaceuticals Inc., proposed indication for the first-line treatment, in combination with gemcitabine, of patients with locally advanced, unresectable or metastatic pancreatic cancer. On September 14, 2005, the committee will discuss the following: (1) NDA 21–880, proposed trade name REVLIMID (lenalidomide), Celgene Corp., proposed indication for the treatment of patients with transfusion-dependent anemia due to low-or intermediate–1–risk myelodysplastic syndromes associated with a deletion 5q cytogenetic abnormality with or without additional cytogenetic abnormalities; and (2) NDA 21–877, proposed trade name ARRANON (nelarabine) Injection, GlaxoSmithKline, proposed indication for the treatment of patients with T-cell acute lymphoblastic leukemia and T-cell lymphoblastic lymphoma whose disease has not responded to, or has relapsed with, at least two chemotherapy regimens.

Procedure: Interested persons may present data, information, or views, orally or in writing, on issues pending before the committee. Written submissions may be made to the contact person by September 2, 2005. Oral presentations from the public will be scheduled between approximately 10:30 a.m. to 11 a.m., and 2:30 p.m. to 3 p.m. on both days. Time allotted for each presentation may be limited. Those desiring to make formal oral presentations should notify the contact person before September 2, 2005, and

submit a brief statement of the general nature of the evidence or arguments they wish to present, the names and addresses of proposed participants, and an indication of the approximate time requested to make their presentation.

Persons attending FDA's advisory committee meetings are advised that the agency is not responsible for providing access to electrical outlets.

FDA welcomes the attendance of the public at its advisory committee meetings and will make every effort to accommodate persons with physical disabilities or special needs. If you require special accommodations due to a disability, please contact Johanna Clifford at 301–827–7001, at least 7 days in advance of the meeting.

Notice of this meeting is given under the Federal Advisory Committee Act (5 U.S.C. app. 2).

Dated: August 10, 2005.

Scott Gottlieb,

Deputy Commissioner for Policy.

[FR Doc. 05–16331 Filed 8–16–05; 8:45 am]

BILLING CODE 4160–01–S

DEPARTMENT OF HEALTH AND HUMAN SERVICES

Health Resources and Services Administration

National Vaccine Injury Compensation Program; List of Petitions Received

AGENCY: Health Resources and Services Administration, HHS.

ACTION: Notice.

SUMMARY: The Health Resources and Services Administration (HRSA) is publishing this notice of petitions received under the National Vaccine Injury Compensation Program (''the Program''), as required by Section 2112(b)(2) of the Public Health Service (PHS) Act, as amended. While the Secretary of Health and Human Services is named as the respondent in all proceedings brought by the filing of petitions for compensation under the Program, the United States Court of Federal Claims is charged by statute with responsibility for considering and acting upon the petitions.

FOR FURTHER INFORMATION CONTACT: For information about requirements for filing petitions, and the Program in general, contact the Clerk, United States Court of Federal Claims, 717 Madison Place, NW., Washington, DC 20005, (202) 357–6400. For information on HRSA's role in the Program, contact the Acting Director, National Vaccine Injury Compensation Program, 5600 Fishers Lane, Room 11C–26, Rockville, MD 20857; (301) 443–6593.

SUPPLEMENTARY INFORMATION: The Program provides a system of no-fault compensation for certain individuals who have been injured by specified childhood vaccines. Subtitle 2 of Title XXI of the PHS Act, 42 U.S.C. 300aa–10 *et seq.*, provides that those seeking compensation are to file a petition with the U.S. Court of Federal Claims and to serve a copy of the petition on the Secretary of Health and Human Services, who is named as the respondent in each proceeding. The Secretary has delegated his responsibility under the Program to HRSA. The Court is directed by statute to appoint special masters who take evidence, conduct hearings as appropriate, and make initial decisions as to eligibility for, and amount of, compensation.

A petition may be filed with respect to injuries, disabilities, illnesses, conditions, and deaths resulting from vaccines described in the Vaccine Injury Table (the Table) set forth at Section 2114 of the PHS Act or as set forth at 42 CFR 100.3, as applicable. This Table lists for each covered childhood vaccine the conditions which may lead to compensation and, for each condition, the time period for occurrence of the first symptom or manifestation of onset or of significant aggravation after vaccine administration. Compensation may also be awarded for conditions not listed in the Table and for conditions that are manifested outside the time periods specified in the Table, but only if the petitioner shows that the condition was caused by one of the listed vaccines.

Section 2112(b)(2) of the PHS Act, 42 U.S.C. 300aa–12(b)(2), requires that the Secretary publish in the **Federal Register** a notice of each petition filed. Set forth below is a list of petitions received by HRSA on April 1, 2005, through June 30, 2005.

Section 2112(b)(2) also provides that the special master ''shall afford all interested persons an opportunity to submit relevant, written information'' relating to the following:

1. The existence of evidence ''that there is not a preponderance of the evidence that the illness, disability, injury, condition, or death described in the petition is due to factors unrelated to the administration of the vaccine described in the petition,'' and

2. Any allegation in a petition that the petitioner either:

(a) ''Sustained, or had significantly aggravated, any illness, disability, injury, or condition not set forth in the Table but which was caused by'' one of the vaccines referred to in the Table, or

(b) ''Sustained, or had significantly aggravated, any illness, disability, injury, or condition set forth in the Vaccine Injury Table the first symptom or manifestation of the onset or significant aggravation of which did not occur within the time period set forth in the Table but which was caused by a vaccine'' referred to in the Table.

This notice will also serve as the special master's invitation to all interested persons to submit written information relevant to the issues described above in the case of the petitions listed below. Any person choosing to do so should file an original and three (3) copies of the information with the Clerk of the U.S. Court of Federal Claims at the address listed above (under the heading ''For Further Information Contact''), with a copy to HRSA addressed to Acting Director, Division of Vaccine Injury Compensation Program, Healthcare Systems Bureau, 5600 Fishers Lane, Room 11C–26, Rockville, MD 20857. The Court's caption (Petitioner's Name v. Secretary of Health and Human Services) and the docket number assigned to the petition should be used as the caption for the written submission. Chapter 35 of title 44, United States Code, related to paperwork reduction, does not apply to information required for purposes of carrying out the Program.

1. Timothy Millet on behalf of Joshua Millet, Boston, Massachusetts, Court of Federal Claims Number 05–0426V
2. Diane Conoly on behalf of Sharp Conoly, Boston, Massachusetts, Court of Federal Claims Number 05–0427V
3. Elizabeth Thomassen on behalf of Aeryn Thomassen, Boston, Massachusetts, Court of Federal Claims Number 05–0428V
4. Michael Collins on behalf of Jacob Collins, Boston, Massachusetts, Court of Federal Claims Number 05–0429V
5. Lane Massey on behalf of Jennifer Massey, Boston, Massachusetts, Court of Federal Claims Number 05–0430V
6. Tasha Randall on behalf of Dorion Johnson, Boston, Massachusetts, Court of Federal Claims Number 05–0431V
7. Brenda McLain on behalf of Cayden McLain, Boston, Massachusetts, Court of Federal Claims Number 05–0432V
8. Johnielle Barren on behalf of Jonathan Chandler Barren, Mobile, Alabama, Court of Federal Claims Number 05–0433V
9. Nahid Ramezani and Amir Poushangi on behalf of Rashim Poushangi, Baltimore, Maryland, Court of Federal Claims Number 05–0435V

10. Lisa and Richard Wells on behalf of Timothy Wells, New Orleans, Louisiana, Court of Federal Claims Number 05–0436V
11. Karen Tiufekchiev, Vienna, Virginia, Court of Federal Claims Number 05–0437V
12. Keri Lynn Kooi, Indianapolis, Indiana, Court of Federal Claims Number 05–0438V
13. Ellyn Weston and Michael Coopersmith on behalf of Noah Simon Coopersmith, Lake Success, New York, Court of Federal Claims Number 05–0442V
14. Deborah and Kevin Murphy on behalf of Brandon Michael Murphy, Lake Success, New York, Court of Federal Claims Number 05–0443V
15. Jeanne and Kenneth Watnilk on behalf of Frank Watnilk, Glendale, California, Court of Federal Claims Number 05–0444V
16. Korinn D. Eldredge, Boise, Idaho, Court of Federal Claims Number 05–0445V
17. Bettie Jo and Timothy Ray Smith on behalf of Owen Robert Anson Smith, New York, New York, Court of Federal Claims Number 05–0446V
18. Karen and Joseph Chu on behalf of Robert Chu, Stevenson Ranch, California, Court of Federal Claims Number 05–0449V
19. Janara and Gene Itov on behalf of Jeffrey Itov, Flemington, New Jersey, Court of Federal Claims Number 05–0453V
20. Susan and Richard Garbutt on behalf of Erica Garbutt, Newport Beach, California, Court of Federal Claims Number 05–0459V
21. Courtney Lugaro on behalf of Grace Lugaro, Philadelphia, Pennsylvania, Court of Federal Claims Number 05–0460V
22. Courtney Lugaro on behalf of Luke Lugaro, Philadelphia, Pennsylvania, Court of Federal Claims Number 05–0461V,
23. Brian Selfridge on behalf of Benjamin Selfridge Somers Point, New Jersey, Court of Federal Claims Number 05–0464V,
24. Frank Forcinito on behalf of Kyle Forcinito, Somers Point, New Jersey, Court of Federal Claims Number 05–0465V
25. Amy Wilkins on behalf of Ryan Wilkins, Powder Springs, Georgia, Court of Federal Claims Number 05–0467V
26. Laura and Robert Theriot on behalf of Thomas Daniel Theriot, Houston, Texas, Court of Federal Claims Number 05–0469V
27. Jodie Harker-Lee on behalf of Chance Harker, Boston, Massachusetts, Court of Federal Claims Number 05–0470V
28. August Stefkovich on behalf of Natalia Stefkovich, Boston, Massachusetts, Court of Federal Claims Number 05–0471V
29. Shannon and Robert Tinnell on behalf of John F.O. Tinnell, Charlestown, West Virginia, Court of Federal Claims Number 05–0473V
30. Linda and Robert Ruckert on behalf of David Ruckert, Somers Point, New Jersey, Court of Federal Claims Number 05–0476V
31. Lily Chau on behalf of Darian Chau, Monterey Park, California, Court of Federal Claims Number 05–0480V
32. Bethie Simens on behalf of Kenney Mayard, West Palm Beach, Florida, Court of Federal Claims Number 05–0481V
33. Genevieve and Robert Kumapley on behalf of Nicholas Kumapley, Somers Point, New Jersey, Court of Federal Claims Number 05–0482V
34. Dayna and Robert Hoff on behalf of Garret Hoff, La Mesa, California, Court of Federal Claims Number 05–0486V
35. Paula and Douglas Petit on behalf of Samuel Petit, Minneapolis, Minnesota, Court of Federal Claims Number 05–0487V
36. Richelle Christopherson on behalf of Trevor Christopherson, Cameron Park, California, Court of Federal Claims Number 05–0492V
37. Paula and Lusi Perez on behalf of Elena Isabel Perez, Marietta, Georgia, Court of Federal Claims Number 05–0493V
38. Peter Church, South Burlington, Vermont, Court of Federal Claims Number 05–0496V
39. Cheri Hessinger on behalf of Shane Hessinger, Chicago, Illinois, Court of Federal Claims Number 05–0497V
40. Katie and Chris French on behalf of Zack Thomas French, Decatur, Texas, Court of Federal Claims Number 05–0498V
41. Katie and Chris French on behalf of Justin Rig French, Decatur, Texas, Court of Federal Claims Number 05–0499V
42. Tracy and Lawrence Pritchard on behalf of Zabort Pritchard, Kingsport, Tennessee, Court of Federal Claims Number 05–0502V
43. Mary Miller on behalf of Michael Matthew Miller, Omaha, Nebraska, Court of Federal Claims Number 05–0504V
44. Susan and Wein Lee King on behalf of Bradley Skyler King, Stuart, Florida, Court of Federal Claims Number 05–0509V
45. Nancy Potts on behalf of William Andrew Potts, Somers Point, New Jersey, Court of Federal Claims Number 05–0510V
46. Shirley Persad on behalf of Dimitrios Dounis, Catskill, New York, Court of Federal Claims Number 05–0512V
47. Lydia Jakymowych on behalf of Alexander Jakymowych, Boston, Massachusetts, Court of Federal Claims Number 05–0518V
48. Mary Rose O'Connell on behalf of Matthew Glickstein, Boston, Massachusetts, Court of Federal Claims Number 05–0519V
49. John Dunn on behalf of Sean Dunn, Boston, Massachusetts, Court of Federal Claims Number 05–0520V
50. Lisa Beck on behalf of Joshua Beck, Boston, Massachusetts, Court of Federal Claims Number 05–0521V
51. Lydia Jakymowych on behalf of Michael Jakymowych, Boston, Massachusetts, Court of Federal Claims Number 05–0522V
52. Joshua Cameron on behalf of Jacob Cameron, Boston, Massachusetts, Court of Federal Claims Number 05–0523V
53. Maria and Rudolfo Torres on behalf of Anaceli Torres, Union City, New Jersey, Court of Federal Claims Number 05–0529V
54. Daniel Pitt on behalf of Damien Pitt, Seattle, Washington, Court of Federal Claims Number 05–0530V
55. Minerva and Dennis Bailey on behalf of Derek Bailey, Pembroke Pines, Florida, Court of Federal Claims Number 05–0531V
56. Howard Baumgartner on behalf of Tyler Baumgartner, Philadelphia, Pennsylvania, Court of Federal Claims Number 05–0535V
57. Harriett and John Lewis Hart on behalf of Donovan Charles Hart, Yardley, Pennsylvania, Court of Federal Claims Number 05–0536V
58. Pamela Evans on behalf of Grace Evans, Boston, Massachusetts, Court of Federal Claims Number 05–0538V
59. Lloyd Zucker on behalf of Landon Zucker, Boston, Massachusetts, Court of Federal Claims Number 05–0539V
60. Patricia McGarry on behalf of Ryan McGarry, Boston, Massachusetts, Court of Federal Claims Number 05–0540V
61. Patricia and Ernest Zarro on behalf of Daniel Zarro, Ossining, New York, Court of Federal Claims Number 05–0542V
62. Heather and Alex Short on behalf of Jaydon Short, Salt Lake City, Utah, Court of Federal Claims Number 05–0546V
63. James Irving Pearson on behalf of Logan James Pearson, Eagle Point, Oregon, Court of Federal Claims Number 05–0553V
64. Elisabeth Francis on behalf of Joshua Francis, Gardnerville, New York, Court of Federal Claims Number 05–0554V

65. Elisabeth Francis on behalf of Rachel Francis, Gardnerville, New York, Court of Federal Claims Number 05–0555V
66. Christine and Patrick Mulvaney on behalf of Daniel Mulvaney, Oveido, Florida, Court of Federal Claims Number 05–0556V
67. Kevin Johnson, Joplin, Missouri, Court of Federal Claims Number 05–0557V
68. Lee Ann and Stephen Kay on behalf of Macklin Kay, Boston, Massachusetts, Court of Federal Claims Number 05–0562V
69. William Bryan on behalf of Lily Bryan, Austin, Texas, Court of Federal Claims Number 05–0566V
70. Christine and Bruce Hopkins on behalf of Alex Hopkins, Melbourne, Florida, Court of Federal Claims Number 05–0568V
71. Tina and Bryan Long on behalf of Stone Long, Lewisville, North Carolina, Court of Federal Claims Number 05–0569V
72. Deborah Kelly, San Diego, California, Court of Federal Claims Number 05–0570V
73. Holly Austin on behalf of Kaleb Austin, Boston, Massachusetts, Court of Federal Claims Number 05–0579V
74. Kate Miller on behalf of Sara Miller, Cooperstown, Pennsylvania, Court of Federal Claims Number 05–0581V
75. Linda Forcello on behalf of Sean Forcello, Boston, Massachusetts, Court of Federal Claims Number 05–0583V
76. Tammy Bowers on behalf of Johnny Andrew Bowers, Boston, Massachusetts, Court of Federal Claims Number 05–0584V
77. Susan Artley on behalf of John Artley, Boston, Massachusetts, Court of Federal Claims Number 05–0585V
78. Philip Way on behalf of Bailey Way, South Beloit, Illinois, Court of Federal Claims Number 05–0588V
79. Louise Habakus on behalf of Ian Habakus, Red Bank, New Jersey, Court of Federal Claims Number 05–0589V
80. Cynthia Stith on behalf of Christian Stith, Boston, Massachusetts, Court of Federal Claims Number 05–0593V
81. Linda and Duane Amity on behalf of Kaitlan Amity, Monroeville, Pennsylvania, Court of Federal Claims Number 05–0594V
82. Jennifer Seitzinger on behalf of Madison Seitzinger, Pittsburgh, Pennsylvania, Court of Federal Claims Number 05–0596V
83. Lee and Chaney Diamond on behalf of Jackson Diamond, Chicago, Illinois, Court of Federal Claims Number 05–0597V
84. Nancy Agosta, Cary, North Carolina, Court of Federal Claims Number 05–0598V
85. Kim Johnston, Round Rock, Texas, Court of Federal Claims Number 05–0599V
86. Mercedes Summers on behalf of Jordan Mayville, Somers Point, New Jersey, Court of Federal Claims Number 05–0600V
87. Teresa Mae Wade-Coursin on behalf of Bryce S-H Wade-Coursin, Alliance, Ohio, Court of Federal Claims Number 05–0601V
88. Sheila and Dan Graham on behalf of Gavin Lynch Graham, Salisbury, North Carolina, Court of Federal Claims Number 05–0603V
89. Pamela and Joseph Doyle on behalf of Katelyn Doyle, Raleigh, North Carolina, Court of Federal Claims Number 05–0605V
90. Jennifer Hadsell on behalf of Mitchell Hadsell, Boston, Massachusetts, Court of Federal Claims Number 05–0609V
91. Jane Hayes on behalf of Grant Hayes, Franklin, Tennessee, Court of Federal Claims Number 05–0610V
92. Katherine and Dean Weber on behalf of Andrew Julius Weber, Bloomington, Indiana, Court of Federal Claims Number 05–0611V
93. Julie Gabos on behalf of Anthony Gabos, Scottsdale, Arizona, Court of Federal Claims Number 05–0613V
94. Anne Hetmaniak on behalf of Adam Zaring, Boston, Massachusetts, Court of Federal Claims Number 05–0614V
95. Minerva and Dennis Bailey on behalf of Dylan Bailey, Pembroke Pines, Florida, Court of Federal Claims Number 05–0616V
96. Tammy Wandling on behalf of Austin Wandling, Somers Point, New Jersey, Court of Federal Claims Number 05–0617V
97. Katherine and Dean Weber on behalf of Andrew Julius Weber, Bloomington, Indiana, Court of Federal Claims Number 05–0618V
98. Bonnie Rukstelo on behalf of Nathan Rukstelo, Jackson, Michigan, Court of Federal Claims Number 05–0619V
99. Christina Burks-Quintero on behalf of Milani Quintero, Rancho Cucamonga, California, Court of Federal Claims Number 05–0620V
100. Princess Burks on behalf of Christina Burks, Rancho Cucamonga, California, Court of Federal Claims Number 05–0621V
101. Jesus Contreas on behalf of Jessie Contreas, Los Angeles, California, Court of Federal Claims Number 05–0626V
102. Line and Robert Fleming on behalf of Robert Evan Fleming, Snellville, Georgia, Court of Federal Claims Number 05–0629V
103. Elizabeth Pitts, Cornelius, North Carolina, Court of Federal Claims Number 05–0648V
104. Cynthia and Timothy Connors on behalf of Gavin Connors, Hampden, Massachusetts, Court of Federal Claims Number 05–0671V
105. Aline and James Malinowski on behalf of James Korben Malinowski, Somers Point, New Jersey, Court of Federal Claims Number 05–0672V
106. Nancie Abston and Jason Fairchild on behalf of Alexander James Fairchild, Deceased, Springfield, Ohio, Court of Federal Claims Number 05–0673V
107. Terry and Kim McMillan on behalf of Terry Michael McMillan, Salisbury, North Carolina, Court of Federal Claims Number 05–0678V
108. Elizabeth Vataker on behalf of Erik Vataker, Weston, Florida, Court of Federal Claims Number 05–0679V
109. Mary Ann Sherman, San Diego, California, Court of Federal Claims Number 05–0680V
110. Heather and Robert Avila on behalf of Taylor Avila, Londonderry, New Hampshire, Court of Federal Claims Number 05–0685V
111. Lisa and Matthew Karlovsky on behalf of Jacob Karlovsky, Scottsdale, Arizona, Court of Federal Claims Number 05–0686V
112. Cynthia Stith on behalf of Kerry Stith, Boston, Massachusetts, Court of Federal Claims Number 05–0688V
113. Kristin Cihak and John Ellis on behalf of Jackson Ellis, Boston, Massachusetts, Court of Federal Claims Number 05–0689V
114. Dina and Pastor Felisilda on behalf of Dean Felisilda, Boston, Massachusetts, Court of Federal Claims Number 05–0690V
115. Michele Brandon on behalf of Gregory Brandon, Boston, Massachusetts, Court of Federal Claims Number 05–0691V
116. Michele and Neil Van Allen on behalf of Katrina M. Van Allen, Valatie, New York, Court of Federal Claims Number 05–0692V
117. Jeffrey Morrow on behalf of Elizabeth Mei Li Morrow, Seattle, Washington, Court of Federal Claims Number 05–0693V
118. Felishia Wisw and Tysheem Hargrove on behalf of Tysheem Hargrove, Jr., Philadelphia, Pennsylvania, Court of Federal Claims Number 05–0694V
119. John Dougherty, Portland, Oregon, Court of Federal Claims Number 05–0700V
120. Marta Pagan, San German, Puerto Rico, Court of Federal Claims Number 05–0701V
121. Jeffrey Morrow on behalf of Ana Mei Mei Morrow, Seattle, Washington, Court of Federal Claims Number 05–0702V

122. Stephanie and Richard Mathis on behalf of Noah Mathis, Boston, Massachusetts, Court of Federal Claims Number 05–0705V
123. Julianne and Donald King on behalf of Beau King, Boston, Massachusetts, Court of Federal Claims Number 05–0706V
124. Gina Lascuola on behalf of Francesca Marie Lascuola, Overland Park, Kansas, Court of Federal Claims Number 05–0710V

Dated: August 10, 2005.

Dennis P. Williams,

Deputy Administrator.

[FR Doc. 05–16237 Filed 8–16–05; 8:45 am]

BILLING CODE 4165–15–U

DEPARTMENT OF HOMELAND SECURITY

U.S. Citizenship and Immigration Services

Agency Information Collection Activities: Extension of a Currently Approved Information Collection; Comment Request

ACTION: 30-Day Notice of Information Collection Under Review: Application for T Nonimmigrant Status; Form I–914, I–914 Supplement A, I–914 Supplement B.

SUMMARY: The Department of Homeland Security, U.S. Citizenship and Immigration Service (USCIS) has submitted the following information collection request to the Office of Management and Budget (OMB) for review and clearance in accordance with the Paperwork Reduction Act of 1995. The information collection was previously published in the **Federal Register** on June 15, 20054 at 70 FR 34790. Notification in the preamble of the interim rule allowed for a 60-day public comment period. No public comments were received on this information collection.

The purpose of this notice is to allow an additional 30 days for public comments. Comments are encouraged and will be accepted until September 16, 2005. This process is conducted in accordance with 5 CFR 1320.10.

Written comments and suggestions from the public and affected agencies concerning the collection of information should address one or more of the following four points:

(1) Evaluate whether the collection of information is necessary for the proper performance of the functions of the agency, including whether the information will have practical utility;

(2) Evaluate the accuracy of the agency's estimate of the burden of the collection of information, including the validity of the methodology and assumptions used;

(3) Enhance the quality, utility, and clarity of the information to be collected; and

(4) Minimize the burden of the collection of information on those who are to respond, including through the use of appropriate automated, electronic, mechanical, or other technological collection techniques or other forms of information technology, e.g., permitting electronic submission of responses.

Overview of this information collection:

(1) *Type of Information Collection:* Extension of a currently approved collection.

(2) *Title of the Form/Collection:* Application for T Nonimmigrant Status; Application for Immediate Family Member of T–1 Recipient; and Declaration of Law Enforcement Officer for Victim of Trafficking in Persons.

(3) *Agency form number, if any, and the applicable component of the Department of Homeland Security sponsoring the collection:* Form I–914, Supplement S, and I–914 Supplement B. U.S. Citizenship and Immigration Services.

(4) *Affected public who will be asked or required to respond, as well as a brief abstract:* Primary: Individual or households. This application incorporates information pertinent to eligibility under the Victims of Trafficking and Violence Protection Act of 2000 (Pub. L. 106–386) and a request for employment. The information on all three parts of the form will be used by the USCIS to determine whether applicants meet the eligibility requirements for certain immigration benefits.

(5) *An estimate of the total number of respondents and the amount of time estimated for an average respondent to respond:* 8,750 Form I–914 responses at 2.25 hours per response; 18,750 Form I–914 Supplement A responses at 1 hour per response; and 7,000 Form I–914 Supplement B responses at .50 hours per response.

(6) *An estimate of the total public burden (in hours) associated with the collection:* 41,938 annual burden hours.

If you have additional comments, suggestions, or need a copy of the information collection instrument, please contact Richard A. Sloan, Director, Regulatory Management Division, U.S. Citizenship and Immigration Services, U.S. Department of Homeland Security, 111 Massachusetts Avenue, NW., Washington, DC, 20529.

Dated: August 10, 2005.

Richard A. Sloan,

Director, Regulatory Management Division, U.S. Citizenship and Immigration Services.

[FR Doc. 05–16271 Filed 8–16–05; 8:45 am]

BILLING CODE 4410–10–M

DEPARTMENT OF HOMELAND SECURITY

U.S. Citizenship and Immigration Services

Agency Information Collection Activities: Extension of a Currently Approved Information Collection; Comment Request

ACTION: 30-Day Notice of Information Collection Under Review: Freedom of Information/Privacy Act Request, Form G–639.

The Department of Homeland Security, U.S. Citizenship and Immigration Services (USCIS) has submitted the following information collection request to the Office of Management and Budget (OMB) for review and clearance in accordance with the Paperwork Reduction Act of 1995. The information collection was previously published in the **Federal Register** on June 15, 2005 at 70 FR 34790, allowed for a 60-day public comment period. No comments were received by the USCIS on this information collection.

The purpose of this notice is to allow an additional 30 days for public comments. Comments are encouraged and will be accepted until September 16, 2005. This process is conducted in accordance with 5 CFR 1320.10.

Written comments and suggestions from the public and affected agencies concerning the collection of information should address one or more of the following four points.

(1) Evaluate whether the collection of information is necessary for the proper performance of the functions of the agency, including whether the information will have practical utility;

(2) Evaluate the accuracy of the agencies estimates of the burden of the collection of information, including the validity of the methodology and assumptions used;

(3) Enhance the quality, utility, and clarity of the information to be collected; and

(4) Minimize the burden of the collection of information on those who are to respond, including through the use of appropriate automated,

electronic, mechanical, or other technological collections techniques, or other forms of information technology, *e.g.,* permitting electronic submission of responses.

Overview of this information collection:

(1) *Type of Information Collection:* Extension of currently approved collection.

(2) *Title of the Form/Collection:* Freedom of Information/Privacy Act Request.

(3) *Agency form number, if any, and the applicable component of the Department of Homeland Security sponsoring the collection:* Form G–639. U.S. Citizenship and Immigration Services.

(4) *Affected public who will be asked or required to respond, as well as a brief abstract:* Primary: Individuals or Households. This form is provided as a convenient means for persons to provide data necessary for identification of a particular record desired under FOIA/PA.

(5) *An estimate of the total number of respondents and the amount of time estimated for an average respondent to respond:* 100,000 responses at 15 minutes (.25) hours per response.

(6) *An estimate of the total public burden (in hours) associated with the collection:* 25,000 annual burden hours.

If you have additional comments, suggestions, or need a copy of the proposed information collection instruments, please contact Richard A. Sloan, Director, Regulatory Management Division, U.S. Citizenship and Immigration Services, 111 Massachusetts Avenue, NW., Washington, DC 20529; 202–272–8377.

Dated: August 10, 2005.

Richard A. Sloan,

Director, Regulatory Management Division, U.S. Citizenship and Immigration Services.

[FR Doc. 05–16272 Filed 8–16–05; 8:45 am]

BILLING CODE 4410–10–M

DEPARTMENT OF THE INTERIOR

Fish and Wildlife Service

Endangered and Threatened Wildlife and Plants; Initiation of 5-Year Reviews of the Mariana Fruit Bat (*Pteropus mariannus mariannus*), etc.; Correction

AGENCY: Fish and Wildlife Service, Interior.

ACTION: Notice of review; correction.

SUMMARY: The U.S. Fish and Wildlife Service published a Notice of Review in the **Federal Register** on July 6, 2005, concerning initiation of 5-year reviews for 33 species in Region 1. The document contained incorrect listing information and names for the Mariana crow (*Corvus kubaryi*) and the Mariana fruit bat (*Pteropus mariannus mariannus*).

DATES: To allow us adequate time to conduct these reviews, we must receive your information no later than September 6, 2005. However, we will continue to accept new information about any listed species at any time.

FOR FURTHER INFORMATION CONTACT: Contact Gina Shultz, U.S. Fish and Wildlife Service, Pacific Islands Fish and Wildlife Office, at (808) 792–9400.

Corrections

In the **Federal Register** on July 6, 2005, in FR Doc 05–13219, on page 38972, in the first column, subject heading, line 5, the scientific name for the Mariana crow should read: (*Corvus kubaryi*).

In Table 1, on page 38973, the first entry of the listing information should read: Mariana fruit bat (=fanihi, Mariana flying fox), *Pteropus mariannus mariannus,* Threatened, Western Pacific Ocean—U.S.A. (GU, MP), 70 FR 1190 (06–JAN–05).

In Table 1, on page 38973, instead of Hawaiian crow, the second entry of the listing information should read: Mariana crow, *Corvus kubaryi,* Endangered, Western Pacific Ocean—U.S.A. (GU, MP), 49 FR 33885 (27–AUG–84).

In addition, the accepted common names and scientific names for three of the Hawaiian bird species should be as follows: Kauai oo (=oo aa, honeyeater) (*Moho braccatus*); Molokai creeper (=kakawahie) (*Paroreomyza flammea*); and Molokai thrush (=olomao) (*Myadestes lanaiensis rutha*).

Dated: August 1, 2005.

David J. Wesley,

Acting Regional Director, Region 1, U.S. Fish and Wildlife Service.

[FR Doc. 05–16270 Filed 8–16–05; 8:45 am]

BILLING CODE 4310–55–P

DEPARTMENT OF THE INTERIOR

Fish and Wildlife Service

Availability of Draft National Management Plan for the Genus *Caulerpa*

AGENCY: Fish and Wildlife Service, Interior.

ACTION: Notice of document availability and request for comments.

SUMMARY: This notice announces the availability of the draft National Management Plan for the Genus *Caulerpa* (NMP) for public review and comment. The draft was prepared by the *Caulerpa* Working Group of the Aquatic Nuisance Species Task Force, as authorized by the Nonindigenous Aquatic Nuisance Prevention and Control Act of 1990 (16 U.S.C. 4701 *et seq.*). Comments received will be considered in preparing the final NMP, which will guide cooperative and integrated management of *Caulerpa* species in the United States.

DATES: Comments on the draft National Management Plan for the Genus *Caulerpa* should be received by September 16, 2005.

ADDRESSES: The document is available from the Chair, *Caulerpa* Working Group, U.S. Fish and Wildlife Service, Stockton Fisheries Resource Office, 4001 N. Wilson Way, Stockton, CA 95205–2486; fax (209) 946–6355. It also is available on our Web page at *http://www.fws.gov/contaminants/Library.cfm.* Comments may be hand-delivered, mailed, or sent by fax to the address listed above. You may send comments by electronic mail to: *David_Bergendorf@fws.gov.*

FOR FURTHER INFORMATION CONTACT: David Bergendorf, Chair, *Caulerpa* Working Group, at (209) 946–6400 ext. 342 or Kari Duncan, Acting Executive Secretary, Aquatic Nuisance Species Task Force at *kari_duncan@fws.gov.*

SUPPLEMENTARY INFORMATION: In 1999 the Aquatic Nuisance Species Task Force (ANSTF) established the *Caulerpa taxifolia* Prevention Committee, which drafted the ''Prevention Program for the Mediterranean strain of *Caulerpa taxifolia.*'' *Caulerpa taxifolia* is a species that can compete with native plant species and impact biodiversity, can alter predator-prey interactions, is directly toxic to herbivores and indirectly toxic to invertebrates, and can shade and smother coral reefs.

Before the prevention plan could be implemented, *Caulerpa taxifolia,* a non-native invasive marine alga, was discovered in two California harbors. As a result of this discovery and the difficulty in distinguishing this non-native invasive strain from other *Caulerpa* species, the ANSTF requested that the existing draft program be modified and expanded to a National Management Plan (NMP) for invasive *Caulerpa* species.

The draft NMP, released today for public comment, outlines and prioritizes management strategies that Federal, State, and local agencies and the private sector can use to address *Caulerpa* introductions in U.S. waters. The goals of the draft NMP are: (1) Preventing the introduction and spread

of *Caulerpa* species to areas in U.S. waters where they are not native; (2) early detection and rapid response to non-native *Caulerpa* species in U.S. waters; (3) eradication of *Caulerpa* populations, in waters to which they are not native, where feasible; (4) providing long-term adaptive management and mitigating impacts of populations of *Caulerpa* species in U.S. waters where they are not native and where eradication is not feasible; (5) educating and informing the public, agencies and policymakers to advocate for preventing the introduction and spread of *Caulerpa* species; (6) identifying research needs and facilitating research to fill information gaps; and (7) reviewing and assessing progress and revising the management plan and continuing to develop information to meet national management plan goals.

Many *Caulerpa* species are native to the warm coastal waters of North, Central and South America. Both Florida and Hawaii have native species of *Caulerpa* in their coastal waters. However, three *Caulerpa* species are of particular concern due to their invasions of U.S. and foreign waters: *C. taxifolia, C. brachypus,* and *C. racemosa.*

Once introduced, invasive *Caulerpa* species can spread via fragmentation or other vectors. *Caulerpa taxifolia* (Mediterranean strain) was listed as a Federal noxious weed by the U.S. Department of Agriculture under the Plant Protection Act on March 16, 1999. This listing prohibits importation, entry, exportation, or movement in interstate commerce of this strain of *C. taxifolia.* To date, eradication efforts for *C. taxifolia* in California have cost over $3.7 million, and over $500,000 has been allocated to study *C. brachypus* in Florida.

Dated: July 29, 2005.

Everett Wilson,

Acting Co-Chair, Aquatic Nuisance Species Task Force, Acting Assistant Director—Fisheries & Habitat Conservation.

[FR Doc. 05–16244 Filed 8–16–05; 8:45 am]

BILLING CODE 4310–55–P

DEPARTMENT OF THE INTERIOR

Bureau of Land Management

[AK962–1410–HY–P; AA–6982–D, SEA–3]

Alaska Native Claims Selection

AGENCY: Bureau of Land Management, DOT.

ACTION: Notice of decision approving lands for conveyance.

SUMMARY: As required by 43 CFR 2650.7(d), notice is hereby given that an appealable decision approving lands for conveyance pursuant to the Alaska Native Claims Settlement Act will be issued to Kake Tribal Corporation. The lands are located in Township 57 South, Range 72 East, Copper River Meridian, in the vicinity of Frederick Sound, Alaska, and contain 180.20 acres. Notice of the decision will also be published four times in the Daily Sitka Sentinel.

DATES: The time limits for filing an appeal are:

1. Any party claiming a property interest which is adversely affected by the decision shall have until September 16, 2005, to file an appeal.

2. Parties receiving notice of the decision by certified mail shall have 30 days from the date of receipt to file an appeal.

Parties who do not file an appeal in accordance with the requirements of 43 CFR part 4, subpart E, shall be deemed to have waived their rights.

ADDRESSES: A copy of the decision may be obtained from: Bureau of Land Management, Alaska State Office, 222 West Seventh Avenue, #13, Anchorage, Alaska 99513–7599.

FOR FURTHER INFORMATION CONTACT: Mark Fullmer, by phone at (907) 271–5998, or by e-mail at *mark_fullmer@ak.blm.gov.* Persons who use a telecommunication device (TTD) may call the Federal Information Relay Service (FIRS) at 1–800–877–8330, 24 hours a day, seven days a week, to contact Mr. Fullmer.

Sharon Warren,

Chief, Branch of Adjudication II.

[FR Doc. 05–16310 Filed 8–16–05; 8:45 am]

BILLING CODE 4310–$$–P

DEPARTMENT OF THE INTERIOR

Bureau of Land Management

[AK964–1410–HY–P; F–14954–B; ASA–2]

Alaska Native Claims Selection

AGENCY: Bureau of Land Management, Interior.

ACTION: Notice of decisions approving lands for conveyance.

SUMMARY: As required by 43 CFR 2650.7(d), notice is hereby given that two appealable decisions approving lands for conveyance pursuant to the Alaska Native Claims Settlement Act will be issued to Olgoonik Corporation. The lands are located in T. 16 N., R. 29 W., T. 14 N., R. 30 W., Tps. 4 S., Rs. 11 and 12 W., Umiat Meridian, in the vicinity of Wainwright, Alaska, aggregating 6,524.46 acres. Notice of the decisions will also be published four times in the *Arctic Sounder.*

DATES: The time limits for filing an appeal are:

1. Any party claiming a property interest which is adversely affected by the decisions shall have until September 16, 2005 to file an appeal.

2. Parties receiving service of the decisions by certified mail shall have 30 days from the date of receipt to file an appeal.

Parties who do not file an appeal in accordance with the requirements of 43 CFR part 4, subpart E, shall be deemed to have waived their rights.

ADDRESSES: Copies of the decisions may be obtained from: Bureau of Land Management, Alaska State Office, 222 West Seventh Avenue, #13, Anchorage, Alaska 99513–7599.

FOR FURTHER INFORMATION, CONTACT: Dina Torres, by phone at (907) 271–3248, or by e-mail at *Dina_Torres@ak.blm.gov.* Persons who use a telecommunication device (TTD) may call the Federal Information Relay Service (FIRS) at 1–800–877–8330, 24 hours a day, seven days a week, to contact Mrs. Torres.

Dina L. Torres,

Land Law Examiner, Branch of Adjudication II.

[FR Doc. 05–16312 Filed 8–16–05; 8:45 am]

BILLING CODE 4310–$$–P

DEPARTMENT OF THE INTERIOR

Bureau of Land Management

[AK964–1410–HY–P; F–19731]

Alaska Native Claims Selection

AGENCY: Bureau of Land Management, Interior.

ACTION: Notice of decision approving lands for conveyance.

SUMMARY: As required by 43 CFR 2650.7(d), notice is hereby given that an appealable decision approving lands for conveyance pursuant to the Alaska Native Claims Settlement Act will be issued to Heirs, Devisees and/or Assigns of Frank Titus. The land is located in T. 6 S., R. 21 E., Kateel River Meridian, in the vicinity of Ruby, Alaska, and contain 39.98 acres. Notice of the decision will also be published four times in the Fairbanks Daily News-Miner.

DATES: The time limits for filing an appeal are:

1. Any party claiming a property interest which is adversely affected by

the decision shall have until September 16, 2005, to file an appeal.

2. Parties receiving service of the decision by certified mail shall have 30 days from the date of receipt to file an appeal.

Parties who do not file an appeal in accordance with the requirements of 43 CFR part 4, subpart E, shall be deemed to have waived their rights.

ADDRESSES: A copy of the decision may be obtained from: Bureau of Land Management, Alaska State Office, 222 West Seventh Avenue, #13, Anchorage, Alaska 99513–7599.

FOR FURTHER INFORMATION, CONTACT: Rosaline Holland by phone at (907) 271–3766, or by e-mail at *Roz_Holland@blm.gov.* Persons who use a telecommunication device (TTD) may call the Federal Information Relay Service (FIRS) at 1–800–877–8330, 24 hours a day, seven days a week, to contact Ms. Holland.

Rosaline Holland,

Land Law Examiner, Branch of Adjudication II.

[FR Doc. 05–16311 Filed 8–16–05; 8:45 am]

BILLING CODE 4310–$$–P

DEPARTMENT OF THE INTERIOR

Bureau of Land Management

[(CA–920–1310–FI); (CACA 45944)]

Proposed Reinstatement of Terminated Oil and Gas Lease CACA 45944

AGENCY: Bureau of Land Management, Interior.

ACTION: Notice of reinstatement of terminated oil and gas lease.

SUMMARY: Under the provisions of Public Law 97–451, Summitt Ventures Inc, timely filed a petition for reinstatement of oil and gas lease CACA 45944 for lands in Kern County, California, and it was accompanied by all required rentals and royalties accruing from April 1, 2005, the date of termination.

FOR FURTHER INFORMATION CONTACT: Bonnie J. Edgerly, Land Law Examiner, Branch of Adjudication Division of Energy & Minerals, BLM California State Office, 2800 Cottage Way, Suite W–1834, Sacramento, California 95825, (916) 978–4370.

SUPPLEMENTARY INFORMATION: No valid lease has been issued affecting the lands. The lessee has agreed to new lease terms for rentals and royalties at rates of $10.00 per acre or fraction thereof and 16⅔ percent, respectively. The lessee has paid the required $500 administrative fee and has reimbursed the Bureau of Land Management for the cost of this **Federal Register** notice. The Lessee has met all the requirements for reinstatement of the lease as set out in Sections 31(d) and (e) of the Mineral Leasing Act of 1920 (30 U.S.C. 188), and the Bureau of Land Management is proposing to reinstate the lease effective April 1, 2005, subject to the original terms and conditions of the lease and the increased rental and royalty rates cited above.

Dated: July 12, 2005.

Debra Marsh,

Supervisor, Branch of Adjudication.

[FR Doc. 05–16313 Filed 8–16–05; 8:45 am]

BILLING CODE 4310–40–P

DEPARTMENT OF THE INTERIOR

Bureau of Land Management

[ID–933–1430–ET; GPO–05–0003; IDI–15306, IDI–15307, IDI–010828, IDI–15301]

Expiration of Public Land Orders and Opening of Lands; Idaho

AGENCY: Bureau of Land Management, Interior.

ACTION: Notice.

SUMMARY: The Bureau of Land Management announces the expiration of two public land orders affecting 32,978.34 acres of public lands. This order opens the lands to surface entry.

DATES: Effective September 16, 2005.

FOR FURTHER INFORMATION CONTACT: Jackie Simmons, Bureau of Land Management, Idaho State Office, 1387 South Vinnell Way, Boise, Idaho 83709, 208–373–3867.

SUPPLEMENTARY INFORMATION:

1. Public Land Order No. 6602, published in the **Federal Register** on May 1, 1985, (50 FR 18487), established a 20-year term for two Bureau of Land Management orders which withdrew 10,846.34 acres of public land from surface entry to protect a stock driveway. Public Land Order No. 6602 expired by operation of law on April 30, 2005.

2. Public Land Order No. 6595, published in the **Federal Register** on March 22, 1985, (50 FR 11505), established 20-year terms for three orders which withdrew 22,132.00 acres of public land from surface entry to protect a stock driveway. Public Land Order No. 6595 expired by operation of law on March 21, 2005.

3. At 8:30 a.m., on September 16, 2005, the lands withdrawn by the public land orders listed in Paragraph 1 and 2 above will be opened to the operation of the public land laws generally, subject to valid existing rights, the provisions of existing withdrawals, other segregations of record, and the requirements of applicable law. All valid applications received at or prior to 8:30 a.m. on September 16, 2005, shall be considered as simultaneously filed at that time. Those received thereafter shall be considered in the order of filing.

(Authority: 43 CFR 2091.6)

Jimmie Buxton,

Branch Chief Land and Minerals.

[FR Doc. 05–16306 Filed 8–16–05; 8:45 am]

BILLING CODE 4310–GG–P

DEPARTMENT OF THE INTERIOR

Bureau of Land Management

[AK–040–05–1430–EQ; AA–084220]

Lease of Public Lands, Alaska

AGENCY: Bureau of Land Management (BLM), Interior.

ACTION: Notice of realty action.

SUMMARY: The Bureau of Land Management (BLM) proposes to renew a lease of approximately one acre of public land near Farewell, Alaska under the provisionsof Section 302 of the Federal Land Policy and Management Act of 1976 (FLPMA) for Mr. Dewayne G. Covey to operate trapping activities and maintain an existing cabin.

DATES: Interested parties may submit comments until October 3, 2005.

ADDRESSES: Comments must be submitted to the Anchorage Field Manager, BLM Anchorage Field Office, 6881 Abbott Loop Road, Anchorage, Alaska 99507–2599.

FOR FURTHER INFORMATION CONTACT: Dorothy J. Bonds, Realty Specialist, BLM, Anchorage Field Office at 907–267–1239.

SUPPLEMENTARY INFORMATION: This notice involves renewing a lease for continued use of public lands for Mr. Dewayne G. Covey to operate trapping activities and to maintain an existing cabin during the winter and fall seasons. This property is located approximately 8 miles west of the Farewell landing strip and 55 miles southeast of McGrath, Alaska, east of the Windy River Fork of the Kuskokwim River. The following described public land has been examined and found suitable for leasing under the provisions of section 302 of the Federal Land Policy and Management Act of 1976 (FLPMA), and 43 CFR part 2920:

Seward Meridian, Alaska

T. 28 N., R. 27 W., Sections 24 and 25.

The above land aggregates one acre.

The BLM proposes to renew a lease for the surface of approximately one acre of public land to Dewayne G. Covey of Farewell, Alaska, under a renewable twenty (20) year lease. The lease is appraised at fair market value; in addition, the lessee shall reimburse the United States for reasonable administrative and other costs incurred by the United States in processing and monitoring the lease. The terms and conditions for leases are found in 43 CFR 2920.7.

Gary Reimer,

Field Manager.

[FR Doc. 05–16307 Filed 8–16–05; 8:45 am]

BILLING CODE 4310–JA–P

DEPARTMENT OF THE INTERIOR

Bureau of Land Management

[CO–120–1430–EU]

Notice of Realty Action: Proposed Modified Competitive Sale and Competitive Sale of Public Lands, Grand County, Colorado

AGENCY: Bureau of Land Management, Interior.

ACTION: Notice of realty action.

SUMMARY: The Bureau of Land Management (BLM) hereby provides notice that it will offer five parcels of public lands located in Grand County, Colorado, for sale at not less than their respective appraised fair market values. The Kremmling Field Manager has determined that because Parcels 1 and 5 have no legal access via any public road and are surrounded by private lands, they will be offered for sale only to the current adjoining landowners under modified competitive sale procedures. Parcels 2, 3, and 4, which have legal access via public roads, will be sold individually under competitive sale procedures open to any person or entity qualified to bid. Sales of all parcels will be by sealed bid only.

DATES: Comments regarding the proposed sales must be in writing and received by BLM not later than October 3, 2005.

Sealed bids must be received by BLM not later than 4:30 p.m. MDT, October 17, 2005.

ADDRESSES: Address all written comments regarding the proposed sales to Field Manager, Kremmling Field Office, 2103 E. Park Ave., P.O. Box 68, Kremmling, Colorado 80459. Comments received in electronic form such as e-mail or facsimile will not be considered.

Address all sealed bids, marked as specified below, to the Kremmling Field Office at the address above.

FOR FURTHER INFORMATION CONTACT: Susan Cassel, Realty Specialist, at (970) 724–3002.

SUPPLEMENTARY INFORMATION: In accordance with the provisions of 43 CFR parts 2710 and 2720, the following described lands in Grand County, Colorado, are proposed to be sold pursuant to authority provided in secs. 203 and 209 of the Federal Land Policy and Management Act of 1976 (FLPMA), as amended (43 U.S.C. 1713, 1719). The parcels to be sold are identified as suitable for disposal in the Kremmling Resource Area Management Plan (1984). Proceeds from sale of these public lands will be deposited in the Federal Land Disposal Account under sec. 206 of the Federal Land Transaction Facilitation Act (43 U.S.C. 2305).

Publication of this notice in the **Federal Register** shall segregate the lands described below from appropriation under the public land laws, including the mining laws. The segregative effect of this notice shall terminate upon issuance of patent or upon expiration 270 days from the date of publication in the **Federal Register**, whichever occurs first.

Modified Noncompetitive Sale

Parcel 1 (COC–63715)

Sixth Principal Meridian, Colorado

T. 1 N., R. 76 W.
sec. 26, lot 6.

The area described contains 41.26 acres. The appraised market value for Parcel 1 is $268,000. This parcel cannot be legally accessed by any public road. It is surrounded by private property and isolated from other federal lands. There are no encumbrances of record.

Parcel 5 (COC–68234)

Sixth Principal Meridian, Colorado

T. 4 N. R. 76 W.,
sec. 24, lot 8.

The area described contains 3.20 acres. The appraised market value for Parcel 5 is $12,000. This lot is isolated and has no legal access. There are no encumbrances of record.

Offers to purchase either parcel will be made by sealed bid only. All bids must be received at the BLM Kremmling Field Office, 2103 E. Park Ave., P.O. Box 68, Kremmling, Colorado 80459, not later than 4:30 p.m. MDT, October 17, 2005.

Sealed bids for Parcels 1 and 5 will be opened to determine the high bid at 10 a.m. MDT, October 18, 2005, at the BLM Kremmling Field Office.

The outside of each bid envelope must be clearly marked on the front lower left-hand corner with ''SEALED BID,'' Parcel Number, and bid opening date. Bids must be for not less than the appraised market value for the parcel. Each sealed bid shall be accompanied by a certified check, postal money order, bank draft, or cashier's check made payable in U.S. currency to ''DOI-Bureau of Land Management'' for an amount not less than 30 percent of the total amount of the bid. Personal checks will not be accepted.

The bid envelope also must contain a signed statement giving the total amount bid for the Parcel and the bidder's name, mailing address, and phone number. As provided in the regulations at 43 CFR 2711.3–2(a)(1)(ii), bidders for Parcels 1 and 5 shall be designated by the BLM and limited to adjoining landowners. Bids for Parcels 1 and 5 submitted by persons or entities other than the designated bidders will be rejected. If BLM receives two or more valid high bids offering an identical amount for a parcel, BLM will notify the apparent high bidders of further procedures to determine the highest qualifying bid.

Competitive Sale

Parcel 2 (COC–67316)

Sixth Principal Meridian, Colorado

T. 1 N., R. 76 W.,
sec. 32, E½NW¼.

The area described contains 80 acres. The appraised market value for Parcel 2 is $480,000. U.S. Highway 40 divides the parcel and provides legal public access. Encumbrances of record include rights-of-way for U.S. Highway 40 (Colorado Department of Transportation), two powerlines (Mountain Parks Electric Association), and one buried telephone line (Qwest Corporation).

Parcel 3 (COC–67317)

Sixth Principal Meridian, Colorado

T. 3 N., R. 76 W.,
sec. 22, lot 10.

The area described contains 2.65 acres. The appraised market value for Parcel 3 is $67,500. The parcel is surrounded by private lands. Grand County Road No. 451, the only encumbrance of record, divides the parcel and provides legal public access.

Parcel 4 (COC–67318)

T. 3 N., R. 76 W.,
sec. 22, lot 16.

The area described contains 2.65 acres. The appraised market value for Parcel 4 is $67,500. The parcel is surrounded by private lands. Grand County Road No. 4, the only encumbrance of record, divides the parcel and provides legal public access.

Offers to purchase Parcels 2, 3, or 4 will be made by sealed bid only. All bids must be received at the BLM Kremmling Field Office, 2103 E. Park Ave., P.O. Box 68, Kremmling, Colorado

80459, not later than 4:30 p.m. MDT, October 17, 2005.

Sealed bids for Parcels 2, 3, and 4 will be opened to determine the high bidder at 10 a.m. MDT, October 18, 2005, at the BLM Kremmling Field Office.

The outside of each bid envelope must be clearly marked on the front lower left-hand corner with ''SEALED BID,'' Parcel Number, and bid opening date. Bids must be for not less than the appraised market value for the parcel. Each sealed bid shall be accompanied by a certified check, postal money order, bank draft, or cashier's check made payable in U.S. currency to ''DOI-Bureau of Land Management'' for an amount not less than 30 percent of the total amount of the bid. Personal checks will not be accepted.

The bid envelope also must contain a signed statement giving the total amount bid for the Parcel and the bidder's name, mailing address, and phone number. Certification of bidder's qualifications must accompany the bid deposit. Evidence of authorization to bid for a corporation or other entity must be included. If BLM receives two or more valid high bids offering an identical amount for a parcel, BLM will notify the apparent high bidders of further procedures to determine the highest qualifying bid.

Additional Terms and Conditions of Sale

Successful bidders will be allowed 90 days from the date of sale to submit the remainder of the full bid price. Failure to timely submit full payment for a parcel shall result in forfeiture of the bid deposit to the BLM, and the parcel will be offered to the second highest qualifying bidder at their original bid. If there are no other acceptable bids, the parcel may continue to be offered by sealed bid on the first Friday of each month at not less than the minimum bid until the offer is canceled.

By law, public lands may be conveyed only to (1) citizens of the United States who are 18 years old or older, (2) a corporation subject to the laws of any State or of the United States, (3) an entity including, but not limited to, associations or partnerships capable of acquiring and owning real property, or interests therein, under the laws of the State of Colorado, or (4) a State, State instrumentality, or political subdivision authorized to hold real property.

The following reservations, rights, and conditions will be included in the patent that may be issued for the above parcels of federal land:

1. A reservation to the United States for a right-of-way for ditches and canals constructed by the authority of the United States. Act of August 30, 1890 (43 U.S.C. 945).

2. Parcels 2, 3, and 4 will be subject to rights-of-way for valid existing rights listed above.

No warranty of any kind, express or implied, is given by the United States as to the title, physical condition, or potential uses of the parcels proposed for sale.

The federal mineral interests underlying these parcels have minimal mineral values and will be conveyed with each parcel sold. A sealed bid for the above described parcels constitutes an application for conveyance of the mineral interest for that parcel. In addition to the full purchase price, a successful bidder must pay a separate nonrefundable filing fee of $50 for the mineral interests to be conveyed simultaneously with the sale of the land.

Public Comments

Detailed information concerning the proposed land sales, including reservations, sale procedures, appraisals, planning and environmental documents, and mineral reports, is available for review at the Kremmling Field Office, 2103 E. Park Ave., Kremmling, Colorado. Normal business hours are 7:45 a.m. to 4:30 p.m. MDT, Monday through Friday, except Federal holidays.

The general public and interested parties may submit written comments regarding the proposed sales to the Field Manager, Kremmling Field Office, not later than 45 days after publication of this Notice in the **Federal Register**. Comments received during this process, including respondent's name, address, and other contact information, will be available for public review. Individual respondents may request confidentiality. If you wish to request that BLM consider withholding your name, address, and other contact information (phone number, e-mail address, or fax number, etc.) from public review or disclosure under the Freedom of Information Act, you must state this prominently at the beginning of your comment. The BLM will honor requests for confidentiality on a case-by-case basis to the extent allowed by law. The BLM will make available for public review, in their entirety, all comments submitted by businesses or organizations, including comments by individuals in their capacity as an official or representative of a business or organization.

Any adverse comments will be reviewed by the BLM State Director, Colorado, who may sustain, vacate, or modify this realty action in whole or in part. In the absence of any adverse comments, this realty action will become the final determination of the Department of the Interior.

John F. Ruhs,

Field Manager, Kremmling Field Office.

[FR Doc. 05–16316 Filed 8–16–05; 8:45 am]

BILLING CODE 4130–JB–U

DEPARTMENT OF THE INTERIOR

Bureau of Land Management

[NV–056–5870–EU; N–78406]

Non-Competitive Sale of Reversionary Interest, Portion of Recreation and Public Purposes Act Patent Number 27–80–0056

AGENCY: Bureau of Land Management, Department of the Interior.

ACTION: Notice of realty action.

SUMMARY: The State of Nevada has filed an application with the Bureau of Land Management (BLM) to purchase, at fair market value, 102.5 acres of land in Clark County, Nevada, free and clear of a reversionary interest held by the United States, pursuant to a direct sale conducted in accordance with the Federal Land Policy and Management Act of 1976.

DATES: For a period until October 3, 2005, interested parties may submit comments to the Field Manager, BLM Las Vegas Field Office.

ADDRESSES: Las Vegas Field Office, Bureau of Land Management, 4701 N. Torrey Pines Drive, Las Vegas, NV 89130.

FOR FURTHER INFORMATION CONTACT: Shawna Woods, Realty Specialist, (702) 515–5099.

SUPPLEMENTARY INFORMATION: The following described land in Clark County, Nevada, was patented to the State of Nevada, Division of State Lands, pursuant to the Act of June 14, 1926 (44 Stat. 741, as amended; 43 U.S.C. 869 *et seq.*), on December 17, 1979, for a state prison (N–11732–02).

Mount Diablo Meridian, Nevada

T. 25 S., R. 59 E.

Portions of section 12 and section 13 as described in patent 27–80–0056.

Containing 480.00 acres, more or less.

Pursuant to the Recreation and Public Purpose (R&PP) Act, the United States retained and continues to hold a reversionary interest in the above described land. If the State of Nevada attempts to transfer the title to, or control over, the land to a ''for profit'' entity, or if the land is devoted to a ''for

profit'' use, the land, as stated in the Act, ''shall revert to the United States'' (43 U.S.C. 869–2(a)). The State of Nevada proposes to change the use of the 102.5 acre parcel, located wholly within the above described 480 acre tract of land from a State prison use to a commercial (for profit) work related, privately owned industrial facility. If pursued, this new use would trigger the R&PP Act reverter or require its enforcement. Consequently, the State of Nevada has applied to the BLM to purchase, pursuant to section 203 of the Federal Land Policy Management Act of 1976 (Pub. L. 94–579), as amended, 43 U.S.C. 1713, of the following described parcel of land, free and clear of the R&PP Act reversionary interest of the United States, as pertaining to the particular parcel:

Mount Diablo Meridian, Nevada

T. 25 S., R. 59 E.
Section 12: NE¼NE¼SW¼SE¼, E½NW¼NE¼SW¼SE¼, S½NE¼SW¼SE¼, E½NE¼SW¼SW¼SE¼, SE¼SW¼SW¼SE¼, SE¼SW¼SE¼, SE¼SE¼
Section 13: NE¼NE¼

(Approximately 102.5 acres)

If the proposed sale is approved, the State of Nevada would pay the fair market value of this land in the sum of $823,000.00, as determined by the BLM authorized officer having taken into account an appraisal, conducted in accordance with the applicable appraisal standards and that assumed the land to be free and clear of the outstanding reversionary interest now held by the United States.

Direct sale procedures to the State of Nevada are considered appropriate, in this case, as the 102.5 acre parcel of land described above was patented previously to the State of Nevada, and transfer of the Federal reversionary interest to any other entity would not protect existing equities of the State of Nevada in the land. The direct sale is consistent with current BLM land use planning for the area. The commercial use of this parcel would benefit the State of Nevada by use of prison labor to train them with skills to return to society.

The conveyance for the reversionary interest of the 102.5 acres will be subject to the provisions of the Federal Land Policy and Management Act and applicable regulations of the Secretary of the Interior, and the land will continue to be subject to the following:

1. The reservation of a right-of-way thereon for ditches or canals constructed by the authority of the United States, Act of August 30, 1890 (26 Stat. 391, 43 U.S.C. 945).

2. All minerals shall be reserved to the United States, together with the right to prospect for, mine and remove such deposits from the same under applicable law and such regulations as the Secretary of the Interior may prescribe.

3. Subject to:

a. Valid existing rights;

b. A right-of-way for railroad purposes granted to the San Pedro, Los Angeles and Salt Lake Railroad Company, its successors or assigns, on April 20, 1906, by right-of-way CC–00360, pursuant to the Act of March 3, 1875, (18 Stat. 482, 43 U.S.C. 934–939);

c. A right-of-way for pipeline purposes granted to the Calnev Pipeline Company, its successors or assigns, on October 21, 1960, under the Act of February 15, 1901, 31 Stat. 790, 43 U.S.C. 959. (Nev–056213);

d. A right-of-way for roadway and communication purposes granted to the American Towers Corporation, its successors or assigns on March 22, 1960, by right-of-way No. Nev–053815, pursuant to the Act of October 21, 1976 (43 U.S.C. 1761) with an expiration date of March 21, 2010.

Detailed information concerning this action, including the environmental report and approved appraisal report, is available for review at the Las Vegas Field Office, Bureau of Land Management, 4701 N. Torrey Pines Dr., Las Vegas, Nevada 89130.

Any adverse comments regarding the proposed action will be reviewed by the State Director. In the absence of any adverse comments, the decision relative to the proposed action, when made by the Field Manager, BLM Las Vegas Field Office, will become effective October 17, 2005. The lands will not be offered for conveyance until after the decision becomes effective.

Authority: 43 CFR 2711.1–2(a) and (c).

Dated: July 11, 2005.

Sharon DiPinto,

Assistant Field Manager, Division of Lands, Las Vegas, NV.

[FR Doc. 05–16315 Filed 8–16–05; 8:45 am]

BILLING CODE 4310–HC–P

DEPARTMENT OF THE INTERIOR

Bureau of Land Management

[WO–120–05–1630–PD]

Final Supplementary Rule for the Public Lands Administered by the Bureau of Land Management, Arizona State Office, Relating to Possession of Open Containers of Alcohol While Operating or Riding on/in Motor Vehicles

AGENCY: Bureau of Land Management, Interior.

ACTION: Final supplementary rule.

SUMMARY: The Bureau of Land Management (BLM) is publishing a final supplementary rule to apply to the public lands administered by the Arizona State Office. The final supplementary rule prohibits the illegal use of alcohol on public lands. BLM needs the final supplementary rule to protect natural resources and the health and safety of public land users. The final supplementary rule will allow BLM law enforcement officers to enforce a regulation prohibiting the possession of open containers of alcohol while operating or riding on/in motor vehicles on public lands in a manner consistent with current Arizona State law and BLM California supplementary rules.

DATES: Effective August 17, 2005.

ADDRESSES: Suggestions and inquiries may be sent to Lyle Shaver, Special Agent-in-Charge, Bureau of Land Management, Arizona State Office, 222 N. Central Avenue, Phoenix, AZ 85004, (602) 417–9317.

FOR FURTHER INFORMATION CONTACT: Lyle Shaver, Special Agent-in-Charge, BLM Arizona State Office, 222 N. Central Avenue, Phoenix, AZ 85004, (602) 417–9317.

SUPPLEMENTARY INFORMATION:

I. Discussion of the Final Supplementary Rule

The final supplementary rule will apply to all public lands administered by BLM's Arizona State Office, *i.e.*, all public lands in Arizona. In keeping with BLM's performance goal to reduce threats to public health and safety and property, the final supplementary rule is necessary to protect the natural resources and to provide for safe public recreation and public health. Alcohol-related offenses are a growing problem on the public lands. Hundreds of people are injured each year while operating or riding on/in motor vehicles on public lands. A large percentage of these injury accidents are alcohol-related. The final supplementary rule will provide BLM

with a tool to increase law enforcement efforts related to driving under the influence and ultimately reduce the number of alcohol related incidents and deaths.

A proposed supplementary rule was published in the **Federal Register** on November 26, 2004, and no comments were received (69 FR 68974). Therefore, BLM Arizona State Office is proceeding with the final supplementary rule as proposed, with a minor editorial change in the definition section for clarity. The definition section in the proposed rule seemed to imply that some other provision might change the meaning of defined terms. Since that is not the case, we removed the language suggesting that possibility.

BLM finds good cause to make this supplementary rule effective the date of publication. The supplementary rule is urgently needed for protection of public safety and health, and is non-controversial, as demonstrated by the absence of public comments on the proposed supplementary rule. The absence of public comments supports a finding of good cause because a delay in the effective date of this rule would be unnecessary given the level of public interest.

II. Procedural Information

Executive Order 12866, Regulatory Planning and Review

This final supplementary rule is not a significant regulatory action and is not subject to review by the Office of Management and Budget under Executive Order 12866. The final supplementary rule will not have an annual effect of $100 million or more on the economy. It will not adversely affect in a material way the economy, productivity, competition, jobs, the environment, public health or safety, or State, local, or tribal governments or communities. It is directed at preventing unlawful personal behavior on public lands for purposes of protecting public health and safety.

The final supplementary rule will not create a serious inconsistency or otherwise interfere with an action taken or planned by another agency. The final supplementary rule will not materially alter the budgetary effects of entitlements, grants, user fees or loan programs or the rights or obligations of their recipients, and will not raise novel legal or policy issues. The final supplementary rule will merely enable BLM law enforcement personnel to enforce a regulation pertaining to unlawful possession of an open container of alcohol on public lands in a manner that mirrors current State of Arizona law and BLM California supplementary rule.

Regulatory Flexibility Act

Congress enacted the Regulatory Flexibility Act of 1980, as amended, 5 U.S.C. 601–612, (RFA) to ensure that Government regulations do not unnecessarily or disproportionately burden small entities. The RFA requires a regulatory flexibility analysis if a rule would have a significant economic impact, either detrimental or beneficial, on a substantial number of small entities. The final supplementary rule will protect the health and safety of individuals, property, and resources on the public lands, including those connected to small businesses, organizations, and governments, and will have no effect on legal activities of these small entities. Therefore, BLM has determined under the RFA that these rules would not have a significant economic impact on a substantial number of small entities.

Small Business Regulatory Enforcement Fairness Act (SBREFA)

This final supplementary rule does not constitute a ''major rule'' as defined at 5 U.S.C. 804(2). Again, the final supplementary rule only pertains to individuals who may be unlawfully using alcohol on the public lands. The final rule will assist in the protection of the public lands and those who use them, including small business concessionaires and outfitters. The final supplementary rule will have no effect on costs, prices, competition, or commercial use of the public lands.

Unfunded Mandates Reform Act

This final supplementary rule will not impose an unfunded mandate on State, local, or tribal governments, in the aggregate, or the private sector of more than $100 million in any year; nor will this final supplementary rule have significant or unique effects on small governments. The final supplementary rule will be patterned on Arizona State law and the BLM California supplementary rule. Therefore, BLM is not required to prepare a statement containing the information required by the Unfunded Mandates Reform Act at 2 U.S.C. 1532.

Executive Order 12630, Governmental Action and Interference With Constitutionally Protected Property Rights (Takings)

The final supplementary rule does not have significant takings implications, and does not cause the impairment of any private property rights. The final supplementary rule will not provide for the surrender or confiscation of any legal personal or real property. Therefore, the Department of the Interior has determined that the final supplementary rule does not require preparation of a takings assessment under this Executive Order.

Executive Order 13132, Federalism

The final supplementary rule will not have a substantial direct effect on the States, on the relationship between the national government and the States, or on the distribution of power and the responsibilities among the various levels of government. The final supplementary rule applies only to public lands administered by the Arizona State Office and does not address jurisdictional issues involving the Arizona State government. Therefore, in accordance with Executive Order 13132, BLM has determined that the final supplementary rule does not have sufficient federalism implications to warrant preparation of a federalism assessment.

Executive Order 13175, Consultation and Coordination With Indian Tribal Governments

In accordance with E.O. 13175, we have found that this final supplementary rule does not include policies that have tribal implications. Since the rule does not change BLM policy and does not involve Indian reservation lands or resources, we have determined that the government-to-government relationships should remain unaffected. The final supplementary rule only prohibits the unlawful possession of alcoholic beverages on public lands.

Executive Order 12988, Civil Justice Reform

Under Executive Order 12988, the Office of the Solicitor has determined that this final supplementary rule will not unduly burden the judicial system and that it meets the requirements of sections 3(a) and 3(b)(2) of the Order.

Paperwork Reduction Act

This final supplementary rule does not contain information collection requirements that the Office of Management and Budget must approve under the Paperwork Reduction Act of 1995, 44 U.S.C. 3501 *et seq.*

National Environmental Policy Act

BLM has determined this final supplementary rule is categorically excluded from environmental review under section 102(2)(C) of the National Environmental Policy Act, pursuant to 516 Departmental Manual (DM) Chapter

2, Appendix 1. Section 1.4 provides a categorical exclusion for law enforcement and legal transactions, including arrests and investigations. In addition, the final supplementary rule does not meet any of the ten criteria for exceptions to categorical exclusions listed in 516 DM, Chapter 2, Appendix 2. Pursuant to Council on Environmental Quality regulations (40 CFR 1508.4) and the environmental policies and procedures of the Department of the Interior, the term ''categorical exclusion'' means a category of actions which do not individually or cumulatively have a significant effect on the human environment and that have been found to have no such effect in procedures adopted by a Federal agency, and for which neither an environmental assessment nor environmental impact statement is required.

Executive Order 13211, Actions Concerning Regulations That Significantly Affect Energy Supply, Distribution, or Use

This final supplementary rule is not a significant energy action. The final rule will not have an adverse effect on energy supplies, production or consumption. It only addresses the possession of alcoholic beverages on public lands, and has no conceivable connection with energy policy.

Author

The principal author of this supplementary rule is Lyle Shaver, Special Agent-in-Charge, Arizona State Office, Bureau of Land Management, Department of the Interior.

Under the authority of 43 CFR 8365.1–6 and 43 U.S.C. 1733(a), the Arizona State Director, Bureau of Land Management, issues a final supplementary rule for public lands administered by the Arizona State Office.

Supplementary Rule on Possession of Open Containers of Alcoholic Beverages on Public Lands in the State of Arizona

The Arizona State Office issues this supplementary rule under the Federal Land Policy and Management Act (FLPMA), 43 U.S.C. 1733(a), 1740, and 43 CFR 8365.1–6.

No person shall have in their possession, or on their person, an open container that contains an alcoholic beverage while operating or riding on/in a motor vehicle or off-road vehicle on public lands in the State of Arizona administered by the BLM, Arizona State Office.

1. Definitions

The following definitions will apply to the supplementary rule:

a. A motor vehicle is defined as any self-propelled device in, upon, or by which a person is or may be transported, including a vehicle that is propelled by electric power. Exempt from this definition are motorized wheelchairs. ''Off-road vehicle'' is defined in 43 CFR 8340.0–5(a).

b. Operator means any person who operates, drives, controls, or otherwise has charge of a mechanical mode of transportation or any other mechanical equipment.

c. Public lands means any lands and interests in lands owned by the United States and administered by the Secretary of the Interior through the Bureau of Land Management without regard to how the United States acquired ownership. This includes, but is not limited to, a paved or unpaved parking lot or other paved or unpaved area where vehicles are parked or areas where the public may drive a motorized vehicle, paved or unpaved roads, roads, routes or trails.

d. Open container means any bottle, can, jar or other receptacle that contains alcohol and that has been opened, has had its seal broken or the contents of which have been partially removed.

2. Limitations

a. This section does not apply to:

i. An open container stored in the trunk of a motor vehicle or, if a motor vehicle is not equipped with a trunk, to an open container stored in some other portion of the motor vehicle designed for the storage of luggage and not normally occupied by or readily accessible to the operator or passengers; or

ii. An open container stored in the living quarters of a motor home or camper; or

iii. Unless otherwise prohibited, an open container carried or stored in a motor vehicle that is parked and the vehicle's occupant(s) are camping.

iv. For the purpose of paragraph (a)(i) of this section, a utility compartment or glove compartment is deemed to be readily accessible to the operator and passengers of a motor vehicle.

Penalties

Under the Federal Land Policy and Management Act of 1976 43 U.S.C. 1733(a), and the Sentencing Reform Act of 1984, as amended, 18 U.S.C. 3551, 3571, persons who violate this restriction are subject to arrest and, upon conviction, may be fined up to $100,000 and/or imprisoned for not more than 12 months.

Elaine Y. Zielinski,

Arizona State Director.

[FR Doc. 05–16314 Filed 8–16–05; 8:45 am]

BILLING CODE 4310–32–P

INTERNATIONAL TRADE COMMISSION

[Investigations Nos. 701–TA–401 and 731–TA–853 and 854 (Review)]

Structural Steel Beams From Japan and Korea

AGENCY: United States International Trade Commission.

ACTION: Notice of Commission determination to conduct full five-year reviews concerning the countervailing duty order on structural steel beams from Korea and the antidumping duty orders on structural steel beams from Japan and Korea.

SUMMARY: The Commission hereby gives notice that it will proceed with full reviews pursuant to section 751(c)(5) of the Tariff Act of 1930 (19 U.S.C. 1675(c)(5)) to determine whether revocation of the countervailing duty order on structural steel beams from Korea and the antidumping duty orders on structural steel beams from Japan and Korea would be likely to lead to continuation or recurrence of material injury within a reasonably foreseeable time. A schedule for the reviews will be established and announced at a later date. For further information concerning the conduct of these reviews and rules of general application, consult the Commission's Rules of Practice and Procedure, part 201, subparts A through E (19 CFR part 201), and part 207, subparts A, D, E, and F (19 CFR part 207).

DATES: Effective August 5, 2005.

FOR FURTHER INFORMATION CONTACT: Mary Messer (202–205–3193), Office of Investigations, U.S. International Trade Commission, 500 E Street, SW., Washington, DC 20436. Hearing-impaired persons can obtain information on this matter by contacting the Commission's TDD terminal on 202–205–1810. Persons with mobility impairments who will need special assistance in gaining access to the Commission should contact the Office of the Secretary at 202–205–2000. General information concerning the Commission may also be obtained by accessing its Internet server (*http://www.usitc.gov*). The public record for these reviews may be viewed on the

Commission's electronic docket (EDIS) at *http://edis.usitc.gov.*

SUPPLEMENTARY INFORMATION: On August 5, 2005, the Commission determined that it should proceed to full reviews in the subject five-year reviews pursuant to section 751(c)(5) of the Act.[1] The Commission found that the domestic interested party group response to its notice of institution (70 FR 22696, May 2, 2005) was adequate, and that the respondent interested party group response with respect to Korea was adequate, but found that the respondent interested party group response with respect to Japan was inadequate. However, the Commission determined to conduct a full review concerning subject imports from Japan to promote administrative efficiency in light of its decision to conduct a full review with respect to subject imports from Korea. A record of the Commissioners' votes, the Commission's statement on adequacy, and any individual Commissioner's statements will be available from the Office of the Secretary and at the Commission's Web site.

Authority: This review is being conducted under authority of title VII of the Tariff Act of 1930; this notice is published pursuant to section 207.62 of the Commission's rules.

By order of the Commission.
Issued: August 11, 2005.

Marilyn R. Abbott,

Secretary to the Commission.

[FR Doc. 05–16245 Filed 8–16–05; 8:45 am]

BILLING CODE 7020–02–P

[1] Commissioner Marcia E. Miller did not participate in these determinations.

DEPARTMENT OF JUSTICE

Drug Enforcement Administration

Manufacturer of Controlled Substances; Notice of Registration

By Notice dated March 25, 2005, and published in the **Federal Register** on April 4, 2005 (70 FR 17124–17125), Mallinckrodt Inc., 3600 North Second Street, St. Louis, Missouri 63147, made application by renewal to the Drug Enforcement Administration (DEA) to be registered as a bulk manufacturer of the basic classes of controlled substances listed in Schedules I and II:

Drug	Schedule
Tetrahydrocannabinols (7370)	I
Codeine-N-oxide (9053)	I
Dihydromorphine (9145)	I
Difenoxin (9168)	I
Morphine-N-oxide (9307)	I
Normorphine (9313)	I
Norlevorphanol (9634)	I
Amphetamine (1100)	II
Methamphetamine (1105)	II
Methylphenidate (1724)	II
Codeine (9050)	II
Diprenorphine (9058)	II
Etorphine HCL (9059)	II
Dihydrocodeine (9120)	II
Hydromorphone (9150)	II
Oxycodone (9143)	II
Diphenoxylate (9170)	II
Benzoylecgonine (9180)	II
Hydrocodone (9193)	II
Levorphanol (9220)	II
Meperidine (9230)	II
Methadone (9250)	II
Methadone Intermediate (9254)	II
Metopon (9260)	II
Dextropropoxyphene (9273)	II
Morphine (9300)	II
Thebaine (9333)	II
Opium extracts (9610)	II
Opium fluid extract (9620)	II
Opium tincture (9630)	II
Opium, powdered (9639)	II
Opium, granulated (9640)	II
Levo-alphacetylmethadol (9648)	II
Oxymorphone (9652)	II
Noroxymorphone (9668)	II
Alfentanil (9737)	II
Remifentanil (9739)	II
Sufentanil (9740)	II
Fentanyl (9801)	II

The company plans to manufacture the listed controlled substances for internal use and for distribution to its customers.

No comments or objections have been received. DEA has considered the factors in 21 U.S.C. 823(a) and determined that the registration of Mallinckrodt Inc. to manufacture the listed basic classes of controlled substances is consistent with the public interest at this time. DEA has investigated Mallinckrodt Inc. to ensure that the company's registration is consistent with the public interest. The investigation has included inspection and testing of the company's physical security systems, verification of the company's compliance with state and local laws, and a review of the company's background and history. Therefore, pursuant to 21 U.S.C. 823, and in accordance with 21 CFR 1301.33, the above named company is granted registration as a bulk manufacturer of the basic classes of controlled substances listed.

Dated: August 11, 2005.

William J. Walker,

Deputy Assistant Administrator, Office of Diversion Control, Drug Enforcement Administration.

[FR Doc. 05–16288 Filed 8–16–05; 8:45 am]

BILLING CODE 4410–09–U

DEPARTMENT OF LABOR

Office of the Secretary

Combating Exploitive Child Labor Through Education in Indonesia and Nepal

AGENCY: Bureau of International Labor Affairs, Department of Labor.

Announcement Type: New. *Notice of Intent To Fund Sole Source Award.*

Catalog of Federal Domestic Assistance (CFDA) Number: Not applicable.

SUMMARY: The U.S. Department of Labor (USDOL), Bureau of International Labor Affairs (ILAB), intends to award USD 2.5 million through a sole source cooperative agreement to Save the Children Federation Inc. (STC), a U.S.-based non-profit organization. This funding will be used over a four-year period to support the current STC project in Indonesia, ''Enabling Communities to Combat Child Trafficking through Education,'' by extending project activities in the earthquake and tsunami stricken region of Aceh and to bring USDOL funded child labor activities in Indonesia to a successful completion. USDOL also intends to award USD 3.5 million through a sole source cooperative agreement to World Education, Inc., a U.S.-based non-profit organization. This funding will support a four-year second phase of World Education's ''Brighter Futures Program: Combating Child Labor in Nepal through Education,'' because the activity to be funded is essential to the satisfactory completion of this project.

ILAB is authorized to award and administer this program by the Consolidated Appropriations Act, 2005, Pub. L. 108–447, 118 Stat. 2809 (2004), which provided funding for USDOL to improve access to basic education in international areas with a high rate of abusive and exploitative child labor through the Child Labor Education Initiative (EI) grant program. Since 1995, USDOL has awarded grants to commercial, international, and non-governmental organizations working to eliminate the worst forms of child labor through the provision of basic education. The cooperative agreements awarded under this initiative will be managed by ILAB's International Child Labor Program to assure achievement of the awards' stated goals.

Indonesia: ILAB finds STC uniquely qualified to implement a major program to rapidly restore the educational sector in Aceh and thereby reduce children's vulnerability to trafficking and other forms of exploitation. STC has worked

in Indonesia for over 30 years and was one of the leaders of the tsunami emergency response effort in Aceh due to its long-standing presence in the region. The target groups of children in Aceh include children being exploited through work in the worst forms of child labor and those at-risk of entering such work, including conscription into fighting in the civil conflict, and working in the agriculture and fishing sectors in the reconstruction effort.

STC is uniquely qualified by virtue of its institutional and contextual knowledge of Indonesia; its familiarity and strong networks with local officials, organizations, and support groups; its pre-existing presence in Aceh and unparalleled experience providing assistance to the region; its extensive working relationships with the targeted communities; its readily available personnel and facilities; and its experience with USDOL reporting and administrative requirements. Additionally, through their previous work and tsunami relief in Aceh, STC has already laid the groundwork for an expansion of the ENABLE project activities and have identified sources of counterpart funding that will multiply the impact of the USDOL investment. The range of services provided by STC includes innovative methods to increase access to formal and non-formal education; generate public awareness; return, rehabilitate, and reintegrate trafficked children; and build capacity at all levels.

USDOL's experience working with STC began in the summer of 2004, when STC submitted proposals to USDOL in response to solicitations for grant applications under the EI. As a result of the competitive processes, USDOL entered into two cooperative agreements with STC to implement EI projects, including one in Indonesia. Activities completed as part of the current Indonesian project include securing the support and involvement of the government at the national, provincial and district levels; laying the ground work for the return, recovery and reintegration aspect of the program; and signing of a Memorandum of Understanding with the Police hospital to establish the Medical Recovery Center for victims of trafficking. However, Aceh was not included as one of the initial target areas in the original cooperative agreement due to the civil conflict and restrictions placed by the government on foreign assistance in the region. The government has since removed the restrictions, in part due to concerns about trafficking in the post-tsunami environment.

Timely provision of services in Aceh is crucial due to the fragile environment created by the trauma and displacement of the tsunami and the ongoing civil conflict. Given STC's longstanding presence and quality work in the region, strong existing on-the-ground relationships, existing solid foundation and counterpart funding for additional activities, and innovative education delivery methods, USDOL finds STC uniquely qualified for this sole-source award and deems it highly capable of providing timely and effective services in Aceh. The awarding of further USDOL support to STC will allow the program to expand its geographic coverage into Aceh and build on existing activities to rebuild and strengthen the education system in Aceh as a means of reducing children's vulnerability to the worst forms of child labor and trafficking.

Nepal: ILAB finds World Education uniquely qualified to perform the program activities in Nepal on a national scale. As a direct educational service provider in Nepal, World Education has a high level of technical expertise in education and administrative oversight capabilities required to work with local implementing partners in targeted districts throughout Nepal. With an extensive network of working relationships with the government, donors, local partners and communities, and district education authorities in Nepal, World Education possesses a unique ability to implement a comprehensive program of direct services to the intended target group of children. This group is comprised of children working in the worst forms of child labor and those at-risk of entering such work, including domestic service, rag picking (recycling), portering, mining and quarrying, brick manufacturing, bus transportation, bonded labor, as well as those children trafficked for labor and sexual exploitation.

The range of services of World Education's Brighter Futures Program includes development of a flexible, modular non-formal education curriculum and schooling program for child laborers; accelerated learning and transition to formal school; practical skills training programs and apprenticeships; psychosocial and career counseling; improved access and quality of the formal education system through parent-teacher association and community/school management committee development; training of teacher trainers; ongoing collection of baseline data to design well-targeted interventions and track the performance of program beneficiaries; and advocacy for the inclusion of child labor issues in national education programs.

USDOL's experience working with World Education in Nepal began in 2002, when World Education submitted a proposal to USDOL in response to a solicitation for grant application under the EI. As a result of that competitive procurement process, USDOL entered into a cooperative agreement with World Education to implement the current EI project in Nepal called the Brighter Futures Program. World Education's innovative approach in working with communities to provide quality education and increase access to schooling through capacity building and strengthening of parent-teacher associations and community/school management committees has proven effective. As of early 2005, World Education has provided, or was in the process of providing, educational services to 21,857 children removed from the worst forms of child labor, exceeding its original program target of 17,000 children. Over 14,000 children at-risk of entering exploitative labor have also received one or more services through the program.

Given World Education's demonstrable ability to deliver quality services in a complex implementing environment, its extensive local partnerships throughout many districts of Nepal, and its ability to work with communities to address the problem of child labor, USDOL finds World Education to be uniquely qualified for this sole source award. Further USDOL support to World Education will allow the Brighter Futures Program time to strengthen and expand activities undertaken through the current project to ensure sustainability of the project's objectives after it is completed.

For additional information on this award, please contact Charita Castro at (202) 693–4843. Mailing address: U.S. Department of Labor, Bureau of International Labor Affairs, 200 Constitution Avenue, NW., Room S–5307, Washington, DC 20210.

Intergovernmental Review

This funding opportunity is not subject to Executive Order 12372, ''Intergovernmental Review of Federal Programs.''

Signed in Washington, DC, this 9th day of August, 2005.

Lisa Harvey,

Grant Officer.

[FR Doc. 05–16273 Filed 8–16–05; 8:45 am]

BILLING CODE 4510–28–P

NUCLEAR REGULATORY COMMISSION

[Docket Nos. 50–334 and 50–412]

FirstEnergy Nuclear Operating Company (FENOC), et al.; Notice of Consideration of Issuance of Amendments to Facility Operating Licenses and Opportunity for a Hearing

The U.S. Nuclear Regulatory Commission (the Commission) is considering issuance of amendments to Facility Operating License Nos. DPR–66 and NPF–73, issued to FENOC (the licensee), for operation of the Beaver Valley Power Station, Unit Nos. 1 and 2 (BVPS–1 and 2) located in Beaver County, Pennsylvania.

The proposed amendments would revise the BVPS–1 and 2 Facility Operating Licenses to allow operation at a maximum authorized power level of 2900 megawatts thermal (MWt), from the current maximum authorized power level of 2689 MWt. This represents an approximate 8% increase in the maximum authorized power level and is categorized as an extended power uprate (EPU). The proposed amendments would authorize operation of BVPS–1 with replacement Model 54F steam generators (SGs) installed. The proposed amendments would authorize the use of an alternate source term (AST) in accordance with Title 10 of the Code of Federal Regulations (10 CFR), part 50, Section 50.67, ''Accident source term.'' Specific guidance for AST implementation is contained in Regulatory Guide 1.183, ''Alternative Radiological Source Terms for Evaluating Design Basis Accidents at Nuclear Power Reactors.'' The licensee has superseded the portion of this amendment request related to the BVPS–1 SG replacement by its applications dated April 13, 2005, for BVPS–1 SG replacement. Specific Technical Specification (TS) changes requested to support the EPU include: (1) Revising the definition of Rated Thermal Power, (2) revising fuel assembly specific departure from nucleate boiling ratios and correlations, (3) raising the maximum temperature of the refueling water storage tank, (4) modifying Overtemperature ΔT and Overpower ΔT equations for BVPS–1 only, (5) revising the SG water level low-low and high-high trip setpoints for BVPS–1 only, (6) revising the required SG secondary side level in Modes 4 and 5 for BVPS–1 only, (7) raising the tolerance settings for the pressurizer safety valves, (8) revising the SG TSs to reflect the replacement SGs for BVPS–1 only, (9) revising the SG TS tube sleeve reference and the TIG (tungsten inert gas) welded SG sleeve repair limit for BVPS–2 only, (10) revising the specific activity for the primary coolant system for BVPS–1 only, (11) increasing the band for accumulator water volume and nitrogen pressure, (12) revising the required charging pump discharge pressure for reactor coolant pump seal injection flow, (13) revising the tolerance settings for the main steam safety valves (MSSVs), (14) changing the allowable power limits associated with inoperable MSSVs, (15) revising the primary plant demineralized water storage tank volume, (16) revising the specific activity of the secondary coolant system for BVPS–1 only, and (17) adding WCAP–14565 and WCAP–15025 to the list of NRC-approved methodologies in TS 6.9.5.

In addition, the licensee has requested numerous TS changes that are not directly related to the EPU request. These include: (1) Deleting the Power Range, Neutron Flux High Negative Rate trip, (2) adding a footnote to Table 3.3–3, ''Engineered Safety Features Actuation System Instrumentation,'' concerning time constraints for steamline pressure low for BVPS–1 only, (3) removing the boron injection tank concentration TS for BVPS–1 only, and (4) renaming the boron injection tank flow path TS for BVPS–1 only. Administrative TS changes to remove the amendment number from the operating licenses in paragraphs 2.C(2) for BVPS–1 and 2 and to correct an inconsistency regarding a referenced permissive for BVPS–1 were also proposed.

Before issuance of the proposed license amendment, the Commission will have made findings required by the Atomic Energy Act of 1954, as amended (the Act), and the Commission's regulations.

Within 60 days after the date of publication of this notice, the licensee may file a request for a hearing with respect to issuance of the amendment to the subject facility operating license and any person whose interest may be affected by this proceeding and who wishes to participate as a party in the proceeding must file a written request for a hearing and a petition for leave to intervene. Requests for a hearing and a petition for leave to intervene shall be filed in accordance with the Commission's ''Rules of Practice for Domestic Licensing Proceedings'' in 10 CFR Part 2. Interested persons should consult a current copy of 10 CFR 2.309, which is available at the Commission's public document room (PDR), located at One White Flint North, Public File Area O–1F21, 11555 Rockville Pike (first floor), Rockville, Maryland. Publicly available records will be accessible from the Agencywide Documents Access and Management System's (ADAMS's) Public Electronic Reading Room on the Internet at the NRC Web site, *http://www.nrc.gov/reading-rm/doc-collections/cfr/*. If a request for a hearing or petition for leave to intervene is filed by the above date, the Commission or a presiding officer designated by the Commission or by the Chief Administrative Judge of the Atomic Safety and Licensing Board Panel, will rule on the request and/or petition; and the Secretary or the Chief Administrative Judge of the Atomic Safety and Licensing Board will issue a notice of a hearing or an appropriate order.

As required by 10 CFR 2.309, a petition for leave to intervene shall set forth with particularity the interest of the petitioner/requestor in the proceeding, and how that interest may be affected by the results of the proceeding. The petition should specifically explain the reasons why intervention should be permitted with particular reference to the following general requirements: (1) The name, address and telephone number of the requestor or petitioner;

(2) the nature of the requestor's/petitioner's right under the Act to be made a party to the proceeding; (3) the nature and extent of the requestor's/petitioner's property, financial, or other interest in the proceeding; and (4) the possible effect of any decision or order which may be entered in the proceeding on the requestor's/petitioner's interest. The petition must also identify the specific contentions which the petitioner/requestor seeks to have litigated at the proceeding.

Each contention must consist of a specific statement of the issue of law or fact to be raised or controverted. In addition, the petitioner/requestor shall provide a brief explanation of the bases for the contention and a concise statement of the alleged facts or expert opinion which support the contention and on which the petitioner intends to rely in proving the contention at the hearing. The petitioner must also provide references to those specific sources and documents of which the petitioner is aware and on which the petitioner intends to rely to establish those facts or expert opinion. The petition must include sufficient information to show that a genuine dispute exists with the applicant on a material issue of law or fact. Contentions shall be limited to matters within the scope of the amendment under consideration. The contention

must be one which, if proven, would entitle the petitioner/requestor to relief. A petitioner/requestor who fails to satisfy these requirements with respect to at least one contention will not be permitted to participate as a party.

Those permitted to intervene become parties to the proceeding, subject to any limitations in the order granting leave to intervene, and have the opportunity to participate fully in the conduct of the hearing.

Nontimely requests and/or petitions and contentions will not be entertained absent a determination by the Commission or the presiding officer of the Atomic Safety and Licensing Board that the petition, request and/or the contentions should be granted based on a balancing of the factors specified in 10 CFR 2.309(a)(1)(i)–(viii).

A request for a hearing or a petition for leave to intervene must be filed by: (1) First class mail addressed to the Office of the Secretary of the Commission, U.S. Nuclear Regulatory Commission, Washington, DC 20555–0001, Attention: Rulemaking and Adjudications Staff; (2) courier, express mail, and expedited delivery services: Office of the Secretary, Sixteenth Floor, One White Flint North, 11555 Rockville Pike, Rockville, Maryland 20852. Attention: Rulemaking and Adjudications Staff; (3) E-mail addressed to the Office of the Secretary, U.S. Nuclear Regulatory Commission, *HEARINGDOCKET@NRC.GOV*; or (4) facsimile transmission addressed to the Office of the Secretary, U.S. Nuclear Regulatory Commission, Washington, DC, Attention: Rulemakings and Adjudications Staff at (301) 415–1101, verification number is (301) 415–1966. A copy of the request for hearing and petition for leave to intervene should also be sent to the Office of the General Counsel, U.S. Nuclear Regulatory Commission, Washington, DC 20555–0001, and it is requested that copies be transmitted either by means of facsimile transmission to 301–415–3725 or by e-mail to *OGCMailCenter@nrc.gov*. A copy of the request for hearing and petition for leave to intervene should also be sent to Mary O'Reilly, FirstEnergy Nuclear Operating Company, FirstEnergy Corporation, 76 South Main Street, Akron, OH 44308, attorney for the licensee.

For further details with respect to this action, see the application for amendment dated October 4, 2004, and supplements dated February 23, May 26, and July 8, 2005, which are available for public inspection at the Commission's PDR, located at One White Flint North, Public File Area O–1F21, 11555 Rockville Pike (first floor), Rockville, Maryland. Publicly available records will be accessible electronically from the ADAMS Public Electronic Reading Room on the Internet at the NRC Web site, *http://www.nrc.gov/reading-rm/adams.html*. Persons who do not have access to ADAMS or who encounter problems in accessing the documents located in ADAMS, should contact the NRC PDR Reference staff by telephone at 1–800–397–4209, 301–415–4737, or by e-mail to *pdr@nrc.gov*.

Dated at Rockville, Maryland, this 11th day of August, 2005.

For the Nuclear Regulatory Commission.

Timothy G. Colburn,

Senior Project Manager, Section 1, Project Directorate I, Division of Licensing Project Management, Office of Nuclear Reactor Regulation.

[FR Doc. E5–4483 Filed 8–16–05; 8:45 am]

BILLING CODE 7590–01–P

NUCLEAR REGULATORY COMMISSION

Advisory Committee on Reactor Safeguards; Subcommittee Meeting on Planning and Procedures; Notice of Meeting

The ACRS Subcommittee on Planning and Procedures will hold a meeting on September 7, 2005, Room T–2B1, 11545 Rockville Pike, Rockville, Maryland.

The entire meeting will be open to public attendance, with the exception of a portion that may be closed pursuant to 5 U.S.C. 552b(c)(2) and (6) to discuss organizational and personnel matters that relate solely to the internal personnel rules and practices of the ACRS, and information the release of which would constitute a clearly unwarranted invasion of personal privacy.

The agenda for the subject meeting shall be as follows:

Wednesday, September 7, 2005, 11:00 a.m.–12:30 p.m.

The Subcommittee will discuss proposed ACRS activities and related matters. The Subcommittee will gather information, analyze relevant issues and facts, and formulate proposed positions and actions, as appropriate, for deliberation by the full Committee.

Members of the public desiring to provide oral statements and/or written comments should notify the Designated Federal Official, Mr. Sam Duraiswamy (telephone: 301–415–7364) between 7:30 a.m. and 4:15 p.m. (e.t.) five days prior to the meeting, if possible, so that appropriate arrangements can be made. Electronic recordings will be permitted only during those portions of the meeting that are open to the public.

Further information regarding this meeting can be obtained by contacting the Designated Federal Official between 7:30 a.m. and 4:15 p.m. (e.t.). Persons planning to attend this meeting are urged to contact the above named individual at least two working days prior to the meeting to be advised of any potential changes in the agenda.

Dated: August 3, 2005.

Michael L. Scott,

Branch Chief, ACRS/ACNW.

[FR Doc. E5–4484 Filed 8–16–05; 8:45 am]

BILLING CODE 7590–01–P

NUCLEAR REGULATORY COMMISSION

Advisory Committee on Reactor Safeguards; Meeting of the Subcommittee on Early Site Permits; Notice of Meeting

The ACRS Subcommittee on Early Site Permits will hold a meeting on September 7, 2005, Room T–2B3, 11545 Rockville Pike, Rockville, Maryland.

The entire meeting will be open to public attendance.

The agenda for the subject meeting shall be as follows:

Wednesday, September 7, 2005—8:30 a.m. Until the Conclusion of Business

The Subcommittee will discuss and review the staff's draft safety evaluation report related to early site permit for the Clinton site and the application submitted by Exelon Generation Company, LLC (Exelon). The Subcommittee will hear presentations by and hold discussions with representatives of the NRC staff, Exelon, and other interested persons regarding this matter. The Subcommittee will gather information, analyze relevant issues and facts, and formulate proposed positions and actions, as appropriate, for deliberation by the full Committee.

Members of the public desiring to provide oral statements and/or written comments should notify the Designated Federal Official, Dr. Medhat M. El-Zeftawy (telephone 301/415–6889) five days prior to the meeting, if possible, so that appropriate arrangements can be made. Electronic recordings will be permitted.

Further information regarding this meeting can be obtained by contacting the Designated Federal Official between 7:30 a.m. and 4:15 p.m. (e.t.). Persons planning to attend this meeting are urged to contact the above named individual at least two working days

prior to the meeting to be advised of any potential changes to the agenda.

Dated: August 10, 2005.

Michael L. Scott,

Branch Chief, ACRS/ACNW.

[FR Doc. E5–4485 Filed 8–16–05; 8:45 am]

BILLING CODE 7590–01–P

NUCLEAR REGULATORY COMMISSION

Advisory Committee on Reactor Safeguards; Meeting Notice

In accordance with the purposes of Sections 29 and 182b. of the Atomic Energy Act (42 U.S.C. 2039, 2232b), the Advisory Committee on Reactor Safeguards (ACRS) will hold a meeting on September 8–10, 2005, 11545 Rockville Pike, Rockville, Maryland. The date of this meeting was previously published in the **Federal Register** on Wednesday, November 24, 2004 (69 FR 68412).

Thursday, September 8, 2005, Conference Room T–2B3, Two White Flint North, Rockville, Maryland

8:30 a.m.–8:35 a.m.: Opening Remarks by the ACRS Chairman (Open)—The ACRS Chairman will make opening remarks regarding the conduct of the meeting.

8:35 a.m.–9:45 a.m.: Final Review of the License Renewal Application for Millstone Power Station, Units 2 and 3 (Open)—The Committee will hear presentations by and hold discussions with representatives of the Dominion Nuclear Connecticut, Inc. and the NRC staff regarding the license renewal application for Millstone Power Station, Units 2 and 3 and the associated Final Safety Evaluation Report prepared by the NRC staff.

10 a.m.–12 Noon: Interim Review of the Exelon/Clinton Early Site Permit Application (Open)—The Committee will hear presentations by and hold discussions with representatives of the Exelon Generation Company, LLC and the NRC staff regarding the Clinton early site permit application and the associated Draft Safety Evaluation Report prepared by the NRC staff.

1:30 p.m.–3:30 p.m.: Proposed Revision 4 to Regulatory Guide 1.82, ''Water Sources for Long-Term Recirculation Cooling Following a Loss-of-Coolant Accident'' (Open)—The Committee will hear presentations by and hold discussions with representatives of the NRC staff regarding proposed Revision 4 to Regulatory Guide 1.82 and the supporting Standard Review Plan, Section 6.2.2, ''Containment Heat Removal Systems,'' related to emergency core cooling system net positive suction head (NPSH) and the use of containment overpressure credit in calculating NPSH.

3:45 p.m.–5:45 p.m.: Possible Alternative Embrittlement Criteria to Those in 10 CFR 50.46 (Open)—The Committee will hear presentations by and hold discussions with representatives of the NRC staff, Electric Power Research Institute, and Framatome regarding possible alternative embrittlement criteria to those in 10 CFR 50.46, ''Acceptance Criteria for Emergency Core Cooling Systems for Light-Water Nuclear Power Reactors,'' and related matters.

6 p.m.–7 p.m.: Preparation of ACRS Reports (Open)—The Committee will discuss proposed ACRS reports on matters considered during this meeting as well as a proposed report on policy issues related to new plant licensing.

Friday, September 9, 2005, Conference Room T–2B3, Two White Flint North, Rockville, Maryland

8:30 a.m.–8:35 a.m.: Opening Remarks by the ACRS Chairman (Open)—The ACRS Chairman will make opening remarks regarding the conduct of the meeting.

8:35 a.m.–9:45 a.m.: Draft Final Updates to License Renewal Guidance Documents (Open)—The Committee will hear presentations by and hold discussions with representatives of the NRC staff regarding draft final updates to NUREG–1800, Revision 1, ''Standard Review Plan for Review of License Renewal Applications for Nuclear Power Plants,'' NUREG–1801, Revision 1, ''Generic Aging Lessons Learned (GALL) Report,'' Regulatory Guide 1.188, Revision 1, ''Standard Format and Content for Applications to Renew Nuclear Power Plant Operating Licenses,'' and NEI 95–10, Revision 6, ''Industry Guidelines for Implementing the Requirements of 10 CFR Part 54—The License Renewal Rule,'' which is endorsed by Regulatory Guide 1.188.

10 a.m.–12 Noon: Meeting with the EDO, Deputy EDOs, and NRC Program Office Directors (Open)—The Committee will hear presentations by and hold discussions with the NRC Executive Director for Operations (EDO), Deputy EDOs, Office Directors of Nuclear Reactor Regulation, Nuclear Regulatory Research, and Nuclear Material Safety and Safeguards regarding items of mutual interest.

1:30 p.m.–2:30 p.m.: Interim Results of the Quality Assessment of Selected NRC Research Projects (Open)—The Committee will discuss the interim results of the cognizant ACRS panel's quality assessment of the NRC research projects on: Standardized Plant Analysis Risk (SPAR) Models Development Program; Steam Generator Tube Integrity Program at the Argonne National Laboratory; and the Thermal-Hydraulic Test Program at the Penn State University.

2:30 p.m.–3:15 p.m.: Future ACRS Activities/Report of the Planning and Procedures Subcommittee (Open)—The Committee will discuss the recommendations of the Planning and Procedures Subcommittee regarding items proposed for consideration by the full Committee during future meetings. Also, it will hear a report of the Planning and Procedures Subcommittee on matters related to the conduct of ACRS business, including anticipated workload and member assignments.

3:15 p.m.–3:30 p.m.: Reconciliation of ACRS Comments and Recommendations (Open)—The Committee will discuss the responses from the EDO to comments and recommendations included in recent ACRS reports and letters.

3:45 p.m.–7 p.m.: Preparation of ACRS Reports (Open)—The Committee will discuss proposed ACRS reports.

Saturday, September 10, 2005, Conference Room T–2B3, Two White Flint North, Rockville, Maryland

8:30 a.m.–3 p.m.: Preparation of ACRS Reports (Open)—The Committee will continue its discussion of proposed ACRS reports.

3 p.m.—3:30 p.m.: Miscellaneous (Open)—The Committee will discuss matters related to the conduct of Committee activities and matters and specific issues that were not completed during previous meetings, as time and availability of information permit.

Procedures for the conduct of and participation in ACRS meetings were published in the **Federal Register** on October 5, 2004 (69 FR 59620). In accordance with those procedures, oral or written views may be presented by members of the public, including representatives of the nuclear industry. Electronic recordings will be permitted only during the open portions of the meeting. Persons desiring to make oral statements should notify the Cognizant ACRS staff named below five days before the meeting, if possible, so that appropriate arrangements can be made to allow necessary time during the meeting for such statements. Use of still, motion picture, and television cameras during the meeting may be limited to selected portions of the meeting as determined by the Chairman. Information regarding the time to be set aside for this purpose may be obtained

by contacting the Cognizant ACRS staff prior to the meeting. In view of the possibility that the schedule for ACRS meetings may be adjusted by the Chairman as necessary to facilitate the conduct of the meeting, persons planning to attend should check with the Cognizant ACRS staff if such rescheduling would result in major inconvenience.

Further information regarding topics to be discussed, whether the meeting has been canceled or rescheduled, as well as the Chairman's ruling on requests for the opportunity to present oral statements and the time allotted therefor can be obtained by contacting Mr. Sam Duraiswamy, Cognizant ACRS staff (301–415–7364), between 7:30 a.m. and 4:15 p.m., e.t.

ACRS meeting agenda, meeting transcripts, and letter reports are available through the NRC Public Document Room at *pdr@nrc.gov,* or by calling the PDR at 1–800–397–4209, or from the Publicly Available Records System (PARS) component of NRC's document system (ADAMS) which is accessible from the NRC Web site at *http://www.nrc.gov/reading-rm/adams.html* or *http://www.nrc.gov/reading-rm/doc-collections/* (ACRS & ACNW Mtg schedules/agendas).

Videoteleconferencing service is available for observing open sessions of ACRS meetings. Those wishing to use this service for observing ACRS meetings should contact Mr. Theron Brown, ACRS Audio Visual Technician (301–415–8066), between 7:30 a.m. and 3:45 p.m., e.t., at least 10 days before the meeting to ensure the availability of this service. Individuals or organizations requesting this service will be responsible for telephone line charges and for providing the equipment and facilities that they use to establish the videoteleconferencing link. The availability of videoteleconferencing services is not guaranteed.

Dated: August 11, 2005

Andrew L. Bates,

Advisory Committee Management Officer.

[FR Doc. E5–4486 Filed 8–16–05; 8:45 am]

BILLING CODE 7590–01–P

OVERSEAS PRIVATE INVESTMENT CORPORATION

September 8, 2005 Public Hearing

Time and Date: 2 p.m., Thursday, September 8, 2005.

Place: Offices of the Corporation, Twelfth Floor Board Room, 1100 New York Avenue, NW., Washington, DC.

Status: Hearing Open to the Public at 2 p.m.

Purpose: Public Hearing in conjunction with each meeting of OPIC's Board of Directors, to afford an opportunity for any person to present views regarding the activities of the Corporation.

Procedures:

Individuals wishing to address the hearing orally must provide advance notice to OPIC's Corporate Secretary no later than 5 p.m., Wednesday, August 31, 2005. The notice must include the individual's name, title, organization, address, and telephone number, and a concise summary of the subject matter to be presented.

Oral presentations may not exceed ten (10) minutes. The time for individual presentations may be reduced proportionately, if necessary, to afford all participants who have submitted a timely request to participate in an opportunity to be heard.

Participants wishing to submit a written statement for the record must submit a copy of such statement to OPIC's Corporate Secretary no later than 5 p.m. Wednesday, August 31, 2005. Such statements must be typewritten, double-spaced, and may not exceed twenty-five (25) pages.

Upon receipt of the required notice, OPIC will prepare an agenda for the hearing identifying speakers, setting forth the subject on which each participant will speak, and the time allotted for each presentation. The agenda will be available at the hearing.

A written summary of the hearing will be compiled, and such summary will be made available, upon written request to OPIC's Corporate Secretary, at the cost of reproduction.

Contact Person For Information: Information on the hearing may be obtained from Connie M. Downs at (202) 336–8438, via facsimile at (202) 218–0136, or via e-mail at *cdown@opic.gov.*

Dated: August 15, 2005.

Connie M. Downs,

OPIC Corporate Secretary.

[FR Doc. 05–16380 Filed 8–15–05; 12:07 pm]

BILLING CODE 3210–01–M

SECURITIES AND EXCHANGE COMMISSION

[Investment Company Act Release No. 27027; 812–13026]

AXP California Tax-Exempt Trust, et al.; Notice of Application

August 11, 2005.

AGENCY: Securities and Exchange Commission (''Commission'').

ACTION: Notice of application for an order under section 12(d)(1)(J) of the Investment Company Act of 1940 (''Act'') for an exemption from sections 12(d)(1)(A) and (B) of the Act, under sections 6(c) and 17(b) of the Act for an exemption from section 17(a) of the Act, and under section 17(d) of the Act and rule 17d–1 under the Act to permit certain joint transactions.

Applicants: AXP California Tax-Exempt Trust, AXP Dimensions Series, Inc., AXP Discovery Series, Inc., AXP Equity Series, Inc., AXP Fixed Income Series, Inc., AXP Global Series, Inc., AXP Government Income Series, Inc., AXP Growth Series, Inc., AXP High Yield Income Series, Inc., AXP High Yield Tax-Exempt Series, Inc., AXP Income Series, Inc., AXP International Series, Inc., AXP Investment Series, Inc., AXP Managed Series, Inc., AXP Market Advantage Series, Inc., AXP Money Market Series, Inc., AXP Partners International Series, Inc., AXP Partners Series, Inc., AXP Sector Series, Inc., AXP Selected Series, Inc., AXP Special Tax-Exempt Series Trust, AXP Stock Series, Inc., AXP Strategy Series, Inc., AXP Tax-Exempt Series, Inc., AXP Tax-Free Money Series, Inc. (together, the ''AXP Funds''), AXP Variable Portfolio-Income Series, Inc., AXP Variable Portfolio-Investment Series, Inc., AXP Variable Portfolio-Managed Series, Inc., AXP Variable Portfolio-Money Market Series, Inc., AXP Variable Portfolio-Partners Series, Inc., AXP Variable Portfolio-Select Series, Inc. (these six entities together, the ''Variable Portfolio Funds''), Growth Trust, Growth and Income Trust, Income Trust, Tax-Free Income Trust, World Trust (these five entities together, the ''Master Trusts'') and Ameriprise Financial, Inc., formerly known as American Express Financial Corporation (''AFI'', and together with the AXP Funds, the Variable Portfolio Funds and the Master Trusts, the ''Applicants'').[1]

[1] Applicants request that any relief granted also apply to (i) any existing or future registered management investment companies and their series that are part of the same ''group of investment companies'' as defined in section 12(d)(1)(G) of the Act and for which AFI or a person controlling, controlled by or under common control (within the meaning of section 2(a)(9) of the Act) with AFI (each, an ''Adviser'') serves as investment adviser (''Registered Funds'') and (ii) any existing or future unregistered entities for which an Adviser serves as investment adviser, trustee, managing member or general partner exercising investment discretion, and which are excepted from the definition of investment company pursuant to section 3(c)(1) or section 3(c)(7) of the Act (''Unregistered Funds''), qualified employee benefit plans, trusts, institutional accounts, bank common funds and bank collective trusts (within the meaning of section 3(c)(11) of the Act) that are not investment companies as defined in the Act (''Other Institutional Clients'', and together with the

Summary of Application: Applicants request an order to permit certain registered management investment companies and unregistered entities to invest uninvested cash and cash collateral in affiliated registered money market funds.

Filing Dates: The application was filed on September 30, 2003 and amended on May 20, 2005 and August 8, 2005.

Hearing or Notification of Hearing: An order granting the application will be issued unless the Commission orders a hearing. Interested persons may request a hearing by writing to the Commission's Secretary and serving applicants with a copy of the request, personally or by mail. Hearing requests should be received by the Commission by 5:30 p.m. on September 1, 2005, and should be accompanied by proof of service on the applicants, in the form of an affidavit, or, for lawyers, a certificate of service. Hearing requests should state the nature of the writer's interest, the reason for the request, and the issues contested. Persons who wish to be notified of a hearing may request notification by writing to the Commission's Secretary.

ADDRESSES: Secretary, Commission, 100 F Street, NE., Washington, DC, 20549–9303; Applicants, c/o Arthur C. Delibert, Esq. and Fatima Sulaiman, Esq., Kirkpatrick & Lockhart Nicholson Graham LLP, 1800 Massachusetts Avenue, NW, Washington, DC, 20036–1221.

FOR FURTHER INFORMATION CONTACT: Shannon Conaty, Senior Counsel, at (202) 551–6827 or Janet M. Grossnickle, Branch Chief, at (202) 551–6821 (Division of Investment Management, Office of Investment Company Regulation).

SUPPLEMENTARY INFORMATION: The following is a summary of the application. The complete application may be obtained for a fee at the Commission's Public Reference Branch, 100 F Street, NE., Washington, DC 20549–0102 (telephone (202) 551–5850).

Applicants' Representations

1. Each of the Registered Funds is registered under the Act as an open-end management investment company. Except for AXP California Tax-Exempt Trust, AXP Special Tax-Exempt Series Trust and the Master Trusts, each Registered Fund is a corporation organized under the laws of the State of Minnesota. AXP California Tax-Exempt Trust, AXP Special Tax-Exempt Series Trust and the Master Trusts are organized as Massachusetts business trusts. AFI serves as the investment adviser to the Registered Funds. Each of AFI and any other Adviser serving as investment adviser to a Registered Fund is registered under the Investment Advisers Act of 1940.

2. Certain of the Registered Funds are ''feeder funds'' (''Feeder Funds'') that seek to achieve their respective investment objectives by investing all their net investable assets, in reliance on section 12(d)(1)(E) of the Act, in corresponding series of the Registered Funds which are ''master funds'' (''Master Funds'').[2] Shares of the Variable Portfolio Funds are sold exclusively to insurance company separate accounts that fund variable annuity and/or variable life contracts.

3. Certain of the Clients (''Participating Clients'') have, or may be expected to have, cash reserves that have not been invested in portfolio securities (''Uninvested Cash'').[3] Uninvested Cash may result from a variety of sources, including dividends or interest received on portfolio securities, unsettled securities transactions, reserves held for investment strategy purposes, scheduled maturity of investments, proceeds from liquidation of investment securities to meet anticipated redemptions and dividend payments, and new monies received from investors. Certain of the Participating Clients also may participate in a securities lending program under which a Participating Client may lend its portfolio securities to registered broker-dealers or other institutional investors deemed by the Adviser to be in good standing (''Securities Lending Program''). The loans will be continuously secured by collateral which may include cash (''Cash Collateral'', and together with Uninvested Cash, ''Cash Balances'') equal at all times to at least the market value of the securities loaned.

4. Applicants request relief to the extent necessary to permit: (i) The Participating Clients to utilize Uninvested Cash to purchase shares of one or more Registered Funds that comply with rule 2a–7 under the Act (''Money Market Funds'') and to redeem such shares; (ii) each of the Participating Clients to utilize Cash Collateral received from the borrowers of its portfolio securities in connection with the Participating Client's Securities Lending Program to purchase shares of one or more of the Money Market Funds and to redeem such shares; (iii) the Money Market Funds to sell shares to, and purchase such shares from, the Participating Clients; and (iv) an Adviser to effect such purchases and sales. The Money Market Funds will seek current income, liquidity and capital preservation by investing exclusively in short-term money market instruments that are valued at their amortized cost pursuant to rule 2a–7 under the Act. Investment of Cash Balances in shares of the Money Market Funds will be in accordance with each Participating Fund's investment restrictions, if any, and will be consistent with its objectives and policies as set forth in its registration statement and reports filed under the Act. Applicants submit that investing Cash Balances in shares of the Money Market Funds is in the best interests of the Participating Funds and their shareholders because the Participating Funds expect to benefit from economies of scale that maximize investment opportunities, minimize credit and interest rate risks, facilitate management of liquidity and minimize administrative costs.

Applicants' Legal Analysis

1. Section 12(d)(1)(A) of the Act provides that no registered investment company may acquire securities of another investment company if such securities represent more than 3% of the acquired company's outstanding voting stock, more than 5% of the acquiring company's total assets, or if such securities, together with the securities of other acquired investment companies, represent more than 10% of the acquiring company's total assets. Section 12(d)(1)(B) of the Act provides that no registered open-end investment company, its principal underwriter or any broker or dealer may sell any security of the company to another investment company if the sale will cause the acquiring company to own more than 3% of the acquired company's voting stock, or if the sale

Registered Funds and the Unregistered Funds, the ''Clients''). All existing Advisers, Registered Funds and Unregistered Funds that currently intend to rely on the requested relief have been named as applicants. All entities that rely on the requested order in the future will do so only in accordance with the terms and conditions of the application.

[2] Applicants also wish to have the flexibility to allow the Feeder Funds to engage directly in the transactions described in the application if, in the future, the Feeder Funds were to terminate their master-feeder structure and instead invest directly in investment securities as single-tier funds. To have this flexibility, Applicants request relief to engage in the transactions described in the application on behalf of each Feeder Fund as well as each Master Fund. Applicants further acknowledge that if the Feeder Funds terminate their master-feeder structure, the Feeder Funds will rely on the requested relief only in accordance with all of the terms and conditions of the application.

[3] The Participating Clients that are Registered Funds are the ''Participating Funds.''

will cause more than 10% of the acquired company's voting stock to be owned by investment companies. Any entity that is excluded from the definition of ''investment company'' under section 3(c)(1) or 3(c)(7) of the Act is deemed to be an investment company for the purposes of the 3% limitation specified in sections 12(d)(1)(A) and (B) with respect to purchases by and sales to such entity of securities of a registered investment company.

2. Section 12(d)(1)(J) of the Act provides that the Commission may exempt any person, security, or transaction (or any classes thereof) from any provision of section 12(d)(1) if, and to the extent that, such exemption is consistent with the public interest and the protection of investors. Applicants request an exemption from the provisions of sections 12(d)(1)(A) and (B) to the extent necessary to permit each Participating Fund and Unregistered Fund to invest Cash Balances in the Money Market Funds. Applicants also request relief to the extent necessary to permit a Money Market Fund, its principal underwriter and any broker or dealer to sell shares of the Money Market Fund to the Participating Funds and Unregistered Funds in excess of the percentage limitations in section 12(d)(1)(B).

3. Applicants state that the proposed arrangement will not result in the abuses that sections 12(d)(1)(A) and (B) were intended to prevent. Applicants state that because each Money Market Fund will maintain a highly liquid portfolio, a Participating Fund or Unregistered Fund will not be in a position to gain undue influence over a Money Market Fund through threat of redemption. Applicants also submit that the proposed arrangement will not result in the inappropriate layering of fees because shares of the Money Market Funds sold to the Participating Funds will not be subject to a sales load, redemption fee, asset-based distribution fee adopted in accordance with rule 12b-1 under the Act or service fee (as defined in rule 2830(b)(9) of the Conduct Rules of the National Association of Securities Dealers, Inc. (''NASD'')), or, if such shares are subject to any such fees, the Adviser for each Participating Fund will waive its advisory fee for each Participating Fund in an amount that offsets the amount of such fees incurred by the Participating Fund. If a Money Market Fund offers more than one class of shares, a Participating Fund will invest its Cash Balances only in the class with the lowest expense ratio (taking into account the expected impact of the Participating Fund's investment) at the time of the investment. In connection with approving any advisory contract between an Adviser and the Participating Funds, the boards of directors, trustees or managers of the Participating Funds (each, a ''Board'' and together the ''Boards''), including a majority who are not ''interested persons'' within the meaning of section 2(a)(19) of the Act (''Independent Board Members''), will consider to what extent, if any, the advisory fees charged to each Participating Fund by the Adviser should be reduced to account for reduced services provided to the Participating Fund by the Adviser as a result of Uninvested Cash being invested in the Money Market Funds. Applicants represent that no Money Market Fund will acquire securities of any other investment company or company relying on section 3(c)(1) or 3(c)(7) of the Act in excess of the limits contained in section 12(d)(1)(A) of the Act, except securities of a registered open-end investment company in the same group of investment companies as the Money Market Fund to the extent permitted by section 12(d)(1)(E) of the Act.

4. Section 17(a) of the Act makes it unlawful for any affiliated person of a registered investment company, or an affiliated person of such person, acting as principal, to sell or purchase any security to or from the investment company. Section 2(a)(3) of the Act defines an ''affiliated person'' of an investment company to include any investment adviser to the company, any person directly or indirectly owning, controlling, or holding with power to vote 5% or more of the outstanding voting securities of such other person, or any person 5% or more of whose outstanding securities are directly or indirectly owned, controlled, or held with power to vote, by such other person, and any person directly or indirectly controlling, controlled by, or under common control with such other person. Because the Adviser serves, or will serve, as investment adviser to the Participating Funds, it may be deemed to be an affiliated person of each Participating Fund under section 2(a)(3) of the Act. In addition, Applicants state that because the Participating Funds share a common investment adviser and the Participating Funds share common officers and Boards, the Participating Funds may be deemed to be under common control and thus considered affiliated persons of each other under section 2(a)(3). Furthermore, a Participating Fund may own more than 5% of the outstanding shares of beneficial interests of one or more of the Money Market Funds and thus the Participating Fund and the Money Market Funds may be deemed to be affiliated persons of each other. Accordingly, the sale of the shares of the Money Market Funds to the Participating Funds, and the redemption of the shares by the Participating Funds, may be prohibited under section 17(a) of the Act.

5. Section 17(b) of the Act authorizes the Commission to exempt a proposed transaction from section 17(a) of the Act if the terms of the proposed transaction, including the consideration to be paid or received, are reasonable and fair and do not involve overreaching on the part of any person concerned, and the proposed transaction is consistent with the policy of each registered investment company concerned and with the general purposes of the Act. Section 6(c) of the Act permits the Commission, by order upon application, to exempt any person, security or transaction, or any class or classes of persons, securities or transactions, from any provision of the Act if the exemption is necessary or appropriate in the public interest and consistent with the protection of investors and the purposes fairly intended by the policy and provisions of the Act.

6. Applicants submit that their request for relief to permit the purchase and redemption of shares of the Money Market Funds by the Participating Funds satisfies the standards in sections 6(c) and 17(b) of the Act. Applicants note that the consideration paid and received on the sale and redemption of shares of the Money Market Funds will be based on the net asset value per share of the Money Market Funds. In addition, Applicants state that the Participating Funds will retain their ability to invest Cash Balances directly in money market instruments as authorized by their respective investment objectives and policies if they believe they can obtain a higher rate of return without incurring additional risk or for any other reason. Applicants represent that a Money Market Fund reserves the right to discontinue selling shares to any of the Participating Clients if the Money Market Fund's Board determines that such sale would adversely affect the Money Market Fund's portfolio management and operations.

7. Section 17(d) of the Act and rule 17d–1 under the Act prohibit an affiliated person of a registered investment company, acting as principal, from participating in or effecting any transaction in connection with any joint enterprise or joint arrangement in which the investment

company participates, unless the Commission has approved the joint arrangement. Applicants state that the Participating Clients, by purchasing and redeeming shares of the Money Market Funds, the Money Market Funds, by selling shares to and redeeming shares from Participating Clients, and the Advisers, by managing the assets of the Participating Clients invested in the Money Market Funds, could be deemed to be participating in a joint enterprise or joint arrangement within the meaning of section 17(d) and rule 17d–1.

8. In considering whether to approve a joint transaction under rule 17d–1, the Commission considers whether the registered investment company's participation in the joint transaction is consistent with the provisions, policies and purposes of the Act, and the extent to which the participation is on a basis different from or less advantageous than that of other participants. Applicants submit that the proposed transactions meet the standards for an order under rule 17d–1.

9. Applicants state that the investment by the Participating Funds in shares of Money Market Funds will be on the same basis and will be indistinguishable from any other shareholder account maintained by the Money Market Funds. Applicants also maintain that, to the extent that the Money Market Funds participate on a basis that is different from the other participants, the relative advantages and disadvantages will vary randomly over time and are not expected to be material.

Applicants' Conditions

Applicants agree that any order granting the requested relief shall be subject to the following conditions:

1. Investment of Cash Balances in shares of a Money Market Fund will be in accordance with each Participating Fund's investment restrictions, if any, and will be consistent with its objectives and policies as set forth in such Participating Fund's registration statement.

2. The shares of the Money Market Funds sold to and redeemed by the Participating Funds will not be subject to a sales load, redemption fee, distribution fee adopted in accordance with rule 12b–1 under the Act, or service fees (as defined in rule 2830(b)(9) of the NASD's Conduct Rules), or, if such shares are subject to any such fee, the Adviser for each Participating Fund will waive its advisory fee for each Participating Fund in an amount that offsets the amount of such fees that are incurred by the Participating Fund.

3. Prior to reliance on the order by a Participating Fund, the Board of the Participating Fund will hold a meeting for the purpose of voting on an advisory contract under section 15 of the Act. Before approving any advisory contract for a Participating Fund, the Board, including a majority of the Independent Board Members, taking into account all relevant factors, shall consider to what extent, if any, the advisory fees charged to the Participating Fund by the Adviser should be reduced to account for reduced services provided to the Participating Fund by the Adviser as a result of Uninvested Cash being invested in the Money Market Funds. In connection with this consideration, the Adviser to the Participating Fund will provide the Board with specific information regarding the approximate cost to the Adviser of, or portion of the advisory fee under the existing advisory fee attributable to, managing the Uninvested Cash of the Participating Fund that can be expected to be invested in the Money Market Funds. The minute books of the Participating Fund will record fully the Board's consideration in approving the advisory contract, including the considerations relating to fees referred to above.

4. Each Participating Fund will invest Uninvested Cash in, and hold shares of, the Money Market Funds only to the extent that the Participating Fund's aggregate investment of Uninvested Cash in the Money Market Funds does not exceed 25% of the Participating Fund's total assets.

5. Each Participating Fund and each Money Market Fund that relies on the order will be part of the same group of investment companies as defined in section 12(d)(1)(G) of the Act, and will be advised, or provided the Adviser manages the Cash Balances, sub–advised by an Adviser. Each Unregistered Fund and Other Institutional Client that relies on the order will have an Adviser as its investment adviser, trustee, managing member or general partner exercising investment discretion.

6. No Money Market Fund in which a Participating Fund invests shall acquire securities of any investment company or company relying on section 3(c)(1) or 3(c)(7) of the Act in excess of the limits contained in section 12(d)(1)(A) of the Act, except securities of a registered open-end investment company in the same group of investment companies as the Money Market Fund to the extent permitted by section 12(d)(1)(E) of the Act.

7. Before a Participating Fund that participates in the Securities Lending Program is permitted to invest Cash Collateral in the Money Market Funds, a majority of the Board (including a majority of the Independent Board Members) will approve such investment. No less frequently than annually, the Board of each Participating Fund (including a majority of the Independent Board Members) will evaluate the Securities Lending Program and its results and determine that investing Cash Collateral in the Money Market Funds is in the best interests of the Participating Fund.

8. The Board of any Participating Fund will satisfy the fund governance standards as defined in rule 0–1(a)(7) under the Act by the compliance date for the rule.

For the Commission, by the Division of Investment Management, under delegated authority.

Margaret H. McFarland,

Deputy Secretary.

[FR Doc. E5–4463 Filed 8–16–05; 8:45 am]

BILLING CODE 8010–01–P

SECURITIES AND EXCHANGE COMMISSION

[Investment Company Act Release No. 27028; 812–13142]

MetLife Investors USA Insurance Company, et al.; Notice of Application

August 11, 2005.

AGENCY: Securities and Exchange Commission (''Commission'').

ACTION: Notice of application for an order under section 12(d)(1)(J) of the Investment Company Act of 1940 (''Act'') for an exemption from sections 12(d)(1)(A) and (B) of the Act, and under sections 6(c) and 17(b) of the Act for an exemption from section 17(a) of the Act.

Summary of the Application: The order would permit certain registered open-end management investment companies to acquire shares of other registered open-end management investment companies and unit investment trusts (''UITs'') that are within and outside the same group of investment companies.

Applicants: (a) MetLife Investors USA Insurance Company (including any insurance company controlling, controlled by or under common control with MetLife Investors USA Insurance Company, including, without limitation, Metropolitan Life Insurance Company) (''MLI USA''); (b) Met Investors Series Trust (''MIST'') and Metropolitan Series Fund, Inc. (''Met Series Fund,'' and together with MIST, the ''Investment Companies''), including the currently

existing series and all future series thereof; (c) any existing or future registered open-end management investment companies and any series thereof that are part of the same ''group of investment companies,'' as defined in section 12(d)(1)(G)(ii) of the Act, as the Investment Companies, and are, or will be, advised by Met Investors Advisory LLC (''Met Investors'') or MetLife Advisers, LLC (''MetLife Advisers,'' and together with Met Investors, the ''Managers'') [1] or any entity controlling, controlled by or under common control with Met Investors or MetLife Advisers; (d) Met Investors; and (e) MetLife Advisers.[2]

Filing Dates: The application was filed on December 8, 2004, and amended on August 5, 2005.

Hearing or Notification of Hearing: An order granting the application will be issued unless the Commission orders a hearing. Interested persons may request a hearing by writing to the Commission's Secretary and serving applicants with a copy of the request, personally or by mail. Hearing requests should be received by the Commission by 5:30 p.m. on September 6, 2005, and should be accompanied by proof of service on applicants in the form of an affidavit or, for lawyers, a certificate of service. Hearing requests should state the nature of the writer's interest, the reason for the request, and the issues contested. Persons who wish to be notified of a hearing may request notification by writing to the Commission's Secretary.

ADDRESSES: Secretary, Commission, 100 F Street, NE., Washington, DC 20549–9303. Applicants: MLI USA, MIST, and Met Investors, 22 Corporate Plaza Drive, Newport Beach, CA 92660; Met Series Fund and MetLife Advisers, 501 Boylston Street, Boston, MA 02116.

FOR FURTHER INFORMATION CONTACT: Christine Y. Greenlees, Senior Counsel, at (202) 551–6879, or Mary Kay Frech, Branch Chief, at (202) 551–6821 (Office of Investment Company Regulation, Division of Investment Management).

SUPPLEMENTARY INFORMATION: The following is a summary of the application. The complete application may be obtained for a fee at the Commission's Public Reference Desk, 100 F Street, NE., Washington, DC 20549–0102 (telephone (202) 551–5850).

Applicants' Representations

1. MLI USA is a stock life insurance company organized under the laws of the state of Delaware and an indirect wholly-owned subsidiary of MetLife, Inc., a publicly traded company. MLI USA issues group and individual variable annuity contracts and variable life insurance policies (collectively, the ''Contracts''), which offer opportunities to invest in the Investment Companies through separate accounts registered under the Act (''Registered Separate Accounts'') and separate accounts exempt from registration under the Act (''Unregistered Separate Accounts,'' and together with the Registered Separate Accounts, the ''Separate Accounts'').

2. MIST is organized as a Delaware statutory trust and Met Series Fund is organized as a Maryland corporation. Each of MIST and Met Series Fund is registered under the Act as an open-end management investment company.[3] MIST and Met Series Fund currently offer 30 and 33 Funds, respectively. Except for organizational seed capital for certain of the Funds invested by Met Investors or an affiliate, shares of MIST and Met Series Fund are sold exclusively to the Separate Accounts to fund benefits under the Contracts issued by MLI USA and its affiliates.

3. Each Manager is an affiliated person of MLI USA and is registered under the Investment Advisers Act of 1940. Met Investors serves as investment adviser to MIST and each of its current Funds. MetLife Advisers serves as investment adviser to Met Series Fund and each of its current Funds.

4. Applicants request relief to permit certain Funds (each such Fund, a ''Fund of Funds'') to invest in: (a) other Funds (''Affiliated Funds''), and/or (b) registered open-end management investment companies and UITs that are not part of the same ''group of investment companies'' (as defined in section 12(d)(1)(G)(ii) of the Act) as the Investment Companies (''Unaffiliated Funds,'' and together with the Affiliated Funds, the ''Underlying Funds''). The Unaffiliated Funds may include UITs (''Unaffiliated Underlying Trusts'') and open-end management investment companies registered under the Act (''Unaffiliated Underlying Funds''). Certain of the Unaffiliated Underlying Trusts or Unaffiliated Underlying Funds may be ''exchange-traded funds'' that are registered under the Act as UITs or open-end management investment companies and have received exemptive relief to sell their shares on a national securities exchange at negotiated prices (''ETFs''). Each Fund of Funds may also make investments in government securities, domestic and foreign common and preferred stock, fixed income securities, futures transactions, options on the foregoing and in other securities that are not issued by registered investment companies and which are consistent with its investment objective, including money market instruments (the ''Other Securities'').

5. Applicants state that the requested relief will provide an efficient and simple method of allowing investors to create a comprehensive asset allocation program.

Applicants' Legal Analysis

A. Section 12(d)(1)

1. Section 12(d)(1)(A) of the Act prohibits a registered investment company from acquiring shares of an investment company if the securities represent more than 3% of the total outstanding voting stock of the acquired company, more than 5% of the total assets of the acquiring company, or, together with the securities of any other investment companies, more than 10% of the total assets of the acquiring company. Section 12(d)(1)(B) of the Act prohibits a registered open-end investment company, its principal underwriter and any broker or dealer from selling the shares of the investment company to another investment company if the sale will cause the acquiring company to own more than 3% of the acquired company's voting stock, or if the sale will cause more than 10% of the acquired company's voting stock to be owned by investment companies generally.

2. Section 12(d)(1)(G) provides, in relevant part, that section 12(d)(1) will not apply to securities of a registered open-end investment company or registered UIT if the acquired company and the acquiring company are part of the same group of investment companies, provided that certain other requirements contained in section 12(d)(1)(G) are met. Applicants state that, while the Funds of Funds currently rely on section 12(d)(1)(G) with respect to their investments in Affiliated Funds, if the Funds of Funds wish to invest in Unaffiliated Funds and Other Securities in addition to Affiliated Funds, they cannot then rely on section 12(d)(1)(G).

3. Section 12(d)(1)(J) of the Act provides that the Commission may

[1] The Managers are each referred to in this notice as a ''Manager'' and include any existing or future entity controlling, controlled by or under common control with a Manager.

[2] All entities that currently intend to rely on the requested order are named as applicants. Any other entity that relies on the order in the future will comply with the terms and conditions of the application.

[3] The Investment Companies and any existing or future registered open-end management investment company that is part of the same group of investment companies as the Investment Companies are each referred to in this notice as an ''Investment Company,'' and each series thereof is referred to in this notice as a ''Fund,'' and all series thereof are, collectively, referred to as ''Funds.''

exempt any person, security, or transaction, or any class or classes of persons, securities or transactions, from any provision of section 12(d)(1) if the exemption is consistent with the public interest and the protection of investors. Applicants seek an exemption under section 12(d)(1)(J) to permit the Funds of Funds to acquire shares of Affiliated and Unaffiliated Funds and to permit the Affiliated and Unaffiliated Funds, their principal underwriters and any broker or dealer to sell shares to the Funds of Funds beyond the limits set forth in sections 12(d)(1)(A) and (B) of the Act.

4. Applicants state that the proposed arrangement will not give rise to the policy concerns underlying sections 12(d)(1)(A) and (B), which include concerns about undue influence by a fund of funds over underlying funds, excessive layering of fees, and overly complex fund structures. Accordingly, applicants believe that the requested exemption is consistent with the public interest and the protection of investors.

5. Applicants state that the proposed arrangement will not result in undue influence by a Fund of Funds or its affiliated persons over the Unaffiliated Funds. To limit the control that a Fund of Funds may have over an Unaffiliated Fund, applicants propose a condition prohibiting: (a) Each Manager and any person controlling, controlled by or under common control with the Manager, any investment company and any issuer that would be an investment company but for section 3(c)(1) or section 3(c)(7) of the Act advised or sponsored by the Manager or any person controlling, controlled by or under common control with the Manager (collectively, the ''Group''), and (b) any investment adviser within the meaning of section 2(a)(20)(B) of the Act (''Sub-Adviser'') to a Fund of Funds, any person controlling, controlled by or under common control with the Sub-Adviser, and any investment company or issuer that would be an investment company but for section 3(c)(1) or 3(c)(7) of the Act (or portion of such investment company or issuer) advised by the Sub-Adviser or any person controlling, controlled by or under common control with the Sub-Adviser (collectively, the ''Sub-Adviser Group'') from controlling an Unaffiliated Fund within the meaning of section 2(a)(9) of the Act.

6. Applicants also propose conditions 2–7, stated below, to preclude a Fund of Funds and its affiliated entities from taking advantage of an Unaffiliated Fund with respect to transactions between the entities and to ensure the transactions will be on an arm's length basis. Condition 2 precludes a Fund of Funds and its Manager, Sub-Adviser, promoter, principal underwriter and any person controlling, controlled by or under common control with any of these entities (each, a ''Fund of Funds Affiliate'') from causing any existing or potential investment by the Fund of Funds in an Unaffiliated Fund to influence the terms of any services or transactions between the Fund of Funds or a Fund of Funds Affiliate and the Unaffiliated Fund or its investment adviser(s), sponsor, promoter, principal underwriter and any person controlling, controlled by or under common control with any of these entities (each, an ''Unaffiliated Fund Affiliate''). Condition 5 precludes a Fund of Funds and Fund of Funds Affiliate (except to the extent it is acting in its capacity as an investment adviser to an Unaffiliated Underlying Fund or sponsor to an Unaffiliated Underlying Trust) from causing an Unaffiliated Fund to purchase a security in an offering of securities during the existence of any underwriting or selling syndicate of which a principal underwriter is an officer, director, member of an advisory board, Manager, Sub-Adviser, or employee of the Fund of Funds, or a person of which any such officer, director, member of an advisory board, Manager, Sub-Adviser, or employee is an affiliated person (each, an ''Underwriting Affiliate,'' except any person whose relationship to the Unaffiliated Fund is covered by section 10(f) of the Act is not an Underwriting Affiliate). An offering of securities during the existence of any underwriting or selling syndicate of which a principal underwriter is an Underwriting Affiliate is an ''Affiliated Underwriting.''

7. As an additional assurance that an Unaffiliated Underlying Fund understands the implications of an investment by a Fund of Funds under the requested order, prior to a Fund of Funds' investment in an Unaffiliated Underlying Fund in excess of the limit in section 12(d)(1)(A)(i), condition 8 requires that the Fund of Funds and Unaffiliated Underlying Fund execute an agreement stating, without limitation, that their boards of directors or trustees and their investment advisers understand the terms and conditions of the order and agree to fulfill their responsibilities under the order. Applicants note that an Unaffiliated Fund (other than an ETF whose shares are purchased by a Fund of Funds in the secondary market) will retain the right to reject an investment by a Fund of Funds.[4]

8. Applicants do not believe that the proposed arrangement will involve excessive layering of fees. With respect to investment advisory fees, applicants state that, prior to reliance on the requested order and subsequently in connection with the approval of any investment advisory contract under section 15 of the Act, the board of directors or trustees of each Fund of Funds (''Board''), including a majority of the directors or trustees who are not ''interested persons,'' as defined in section 2(a)(19) of the Act (''Disinterested Trustees''), will find that the investment advisory fees charged under a Fund of Fund's investment advisory contract(s) are based on services provided that are in addition to, rather than duplicative of, services provided pursuant to any Affiliated Fund's and Unaffiliated Underlying Fund's advisory contract(s). Applicants further state that each Manager will waive fees otherwise payable to it by a Fund of Funds in an amount at least equal to any compensation (including fees received pursuant to any plan adopted by an Unaffiliated Underlying Fund under rule 12b–1 under the Act) received from an Unaffiliated Fund by the Manager, or an affiliated person of the Manager, other than any advisory fees paid to the Manager or its affiliated person by the Unaffiliated Fund, in connection with the investment by the Fund of Funds in the Unaffiliated Fund.

9. Applicants state that the proposed arrangement will not create an overly complex fund structure. Applicants note that an Underlying Fund will be prohibited from acquiring securities of any investment company or company relying on section 3(c)(1) or 3(c)(7) of the Act in excess of the limits contained in section 12(d)(1)(A), except to the extent that such Underlying Fund: (a) Receives securities of another investment company as a dividend or as a result of a plan of reorganization of a company (other than a plan devised for the purpose of evading section 12(d)(1) of the Act); or (b) acquires (or is deemed to have acquired) securities of another investment company pursuant to exemptive relief from the Commission permitting such Underlying Fund to: (i) Acquire securities of one or more affiliated investment companies for short-term cash management purposes, or (ii) engage in interfund borrowing and lending transactions. Applicants

[4] An Unaffiliated Fund, including an ETF, would retain its right to reject any initial investment by a Fund of Funds in excess of the limit in section 12(d)(1)(A)(i) of the Act by declining to execute the agreement with the Fund of Funds.

also represent that a Fund of Funds' prospectus and sales literature will contain concise, ''plain English'' disclosure designed to inform investors of the unique characteristics of the proposed Fund of Funds structure, including, but not limited to, its expense structure and the additional expenses of investing in Underlying Funds.

B. Section 17(a)

1. Section 17(a) of the Act generally prohibits sales or purchases of securities between a registered investment company and any affiliated person of the company. Section 2(a)(3) of the Act defines an ''affiliated person'' of another person to include (a) any person directly or indirectly owning, controlling, or holding with power to vote, 5% or more of the outstanding voting securities of the other person; (b) any person 5% or more of whose outstanding voting securities are directly or indirectly owned, controlled, or held with power to vote by the other person; and (c) any person directly or indirectly controlling, controlled by, or under common control with the other person.

2. Applicants state that the Funds of Funds and the Affiliated Funds might be deemed to be under common control of the Manager and therefore affiliated persons of one another. Applicants also state that the Funds of Funds and the Underlying Funds might be deemed to be affiliated persons of one another if a Fund of Funds acquires 5% or more of an Underlying Fund's outstanding voting securities. In light of these possible affiliations, section 17(a) could prevent an Underlying Fund from selling shares to and redeeming shares from a Fund of Funds.

3. Section 17(b) of the Act authorizes the Commission to grant an order permitting a transaction otherwise prohibited by section 17(a) if it finds that (a) the terms of the proposed transaction are fair and reasonable and do not involve overreaching on the part of any person concerned; (b) the proposed transaction is consistent with the policies of each registered investment company involved; and (c) the proposed transaction is consistent with the general purposes of the Act. Section 6(c) of the Act permits the Commission to exempt any person or transactions from any provision of the Act if such exemption is necessary or appropriate in the public interest and consistent with the protection of investors and the purposes fairly intended by the policy and provisions of the Act.

4. Applicants submit that the proposed arrangement satisfies the standards for relief under sections 17(b) and 6(c) of the Act. Applicants state that the terms of the arrangement are fair and reasonable and do not involve overreaching. Applicants note that the terms upon which an Underlying Fund will sell its shares to or purchase its shares from a Fund of Funds will be based on the net asset value of each Underlying Fund.[5] Applicants state that the proposed arrangement will be consistent with the policies of each Fund of Funds and Underlying Fund, and with the general purposes of the Act.

Applicants' Conditions

Applicants agree that the order granting the requested relief shall be subject to the following conditions:

1. The members of the Group will not control (individually or in the aggregate) an Unaffiliated Fund within the meaning of section 2(a)(9) of the Act. The members of the Sub-Adviser Group will not control (individually or in the aggregate) an Unaffiliated Fund within the meaning of section 2(a)(9) of the Act. If, as a result of a decrease in the outstanding voting securities of an Unaffiliated Fund, the Group or the Sub-Adviser Group, each in the aggregate, becomes a holder of more than 25 percent of the outstanding voting securities of the Unaffiliated Fund, it (except for any member of the Group or the Sub-Adviser Group that is a Separate Account) will vote its shares of the Unaffiliated Fund in the same proportion as the vote of all other holders of the Unaffiliated Fund's shares. A Registered Separate Account will seek voting instructions from its contract holders and will vote its shares of an Unaffiliated Fund in accordance with the instructions received and will vote those shares for which no instructions were received in the same proportion as the shares for which instructions were received. An Unregistered Separate Account will either: (i) Vote its shares of the Unaffiliated Fund in the same proportion as the vote of all other holders of the Unaffiliated Fund's shares; or (ii) seek voting instructions from its contract holders and vote its shares in accordance with the instructions received and vote those shares for which no instructions were received in the same proportion as the shares for which instructions were received. This condition will not apply to the Sub-Adviser Group with respect to an Unaffiliated Fund for which the Sub-Adviser or a person controlling, controlled by, or under common control with the Sub-Adviser acts as the investment adviser within the meaning section 2(a)(20)(A) of the Act (in the case of an Unaffiliated Underlying Fund) or as the sponsor (in the case of an Unaffiliated Underlying Trust).

2. No Fund of Funds or Fund of Funds Affiliate will cause any existing or potential investment by the Fund of Funds in an Unaffiliated Fund to influence the terms of any services or transactions between the Fund of Funds or a Fund of Funds Affiliate and the Unaffiliated Fund or an Unaffiliated Fund Affiliate.

3. The Board of each Fund of Funds, including a majority of the Disinterested Trustees, will adopt procedures reasonably designed to assure that the Manager and any Sub-Adviser are conducting the investment program of the Fund of Funds without taking into account any consideration received by the Fund of Funds or a Fund of Funds Affiliate from an Unaffiliated Fund or an Unaffiliated Fund Affiliate in connection with any services or transactions.

4. Once an investment by a Fund of Funds in the securities of an Unaffiliated Underlying Fund exceeds the limit of section 12(d)(1)(A)(i) of the Act, the Board of the Unaffiliated Underlying Fund, including a majority of the Disinterested Trustees, will determine that any consideration paid by the Unaffiliated Underlying Fund to a Fund of Funds or a Fund of Funds Affiliate in connection with any services or transactions: (a) Is fair and reasonable in relation to the nature and quality of the services and benefits received by the Unaffiliated Underlying Fund; (b) is within the range of consideration that the Unaffiliated Underlying Fund would be required to pay to another unaffiliated entity in connection with the same services or transactions; and (c) does not involve overreaching on the part of any person concerned. This condition does not apply with respect to any services or transactions between an Unaffiliated Underlying Fund and its investment adviser(s), or any person controlling, controlled by, or under common control with such investment adviser(s).

5. No Fund of Funds or Fund of Funds Affiliate (except to the extent it is acting in its capacity as an investment adviser to an Unaffiliated Underlying Fund or sponsor to an Unaffiliated Underlying Trust) will cause an

[5] Applicants note that a Fund of Funds generally would purchase and sell shares of an Underlying Fund that operates as an ETF through secondary market transactions at market prices rather than through principal transactions with the Underlying Fund at net asset value. Applicants would not rely on the requested relief from section 17(a) for such secondary market transactions.

Unaffiliated Fund to purchase a security in any Affiliated Underwriting.

6. The Board of an Unaffiliated Underlying Fund, including a majority of the Disinterested Trustees, will adopt procedures reasonably designed to monitor any purchases of securities by the Unaffiliated Underlying Fund in an Affiliated Underwriting, once an investment by a Fund of Funds in the securities of the Unaffiliated Underlying Fund exceeds the limit of section 12(d)(1)(A)(i) of the Act, including any purchases made directly from an Underwriting Affiliate. The Board of the Unaffiliated Underlying Fund will review these purchases periodically, but no less frequently than annually, to determine whether the purchases were influenced by the investment by the Fund of Funds in the Unaffiliated Underlying Fund. The Board of the Unaffiliated Underlying Fund will consider, among other things: (a) Whether the purchases were consistent with the investment objectives and policies of the Unaffiliated Underlying Fund; (b) how the performance of securities purchased in an Affiliated Underwriting compares to the performance of comparable securities purchased during a comparable period of time in underwritings other than Affiliated Underwritings or to a benchmark such as a comparable market index; and (c) whether the amount of securities purchased by the Unaffiliated Underlying Fund in Affiliated Underwritings and the amount purchased directly from an Underwriting Affiliate have changed significantly from prior years. The Board of the Unaffiliated Underlying Fund will take any appropriate actions based on its review, including, if appropriate, the institution of procedures designed to assure that purchases of securities in Affiliated Underwritings are in the best interests of shareholders.

7. Each Unaffiliated Underlying Fund will maintain and preserve permanently in an easily accessible place a written copy of the procedures described in the preceding condition, and any modifications to such procedures, and will maintain and preserve for a period of not less than 6 years from the end of the fiscal year in which any purchase from an Affiliated Underwriting occurred, the first 2 years in an easily accessible place, a written record of each purchase of securities in an Affiliated Underwriting once an investment by a Fund of Funds in the securities of an Unaffiliated Underlying Fund exceeds the limit of section 12(d)(1)(A)(i) of the Act, setting forth from whom the securities were acquired, the identity of the underwriting syndicate's members, the terms of the purchase, and the information or materials upon which the determinations of the Board of the Unaffiliated Underlying Fund were made.

8. Prior to its investment in shares of an Unaffiliated Underlying Fund in excess of the limit in section 12(d)(1)(A)(i) of the Act, the Fund of Funds and the Unaffiliated Underlying Fund will execute an agreement stating, without limitation, that their boards of directors or trustees and their investment advisers understand the terms and conditions of the order and agree to fulfill their responsibilities under the order. At the time of its investment in shares of an Unaffiliated Underlying Fund in excess of the limit in section 12(d)(1)(A)(i), a Fund of Funds will notify the Unaffiliated Underlying Fund of the investment. At such time, the Fund of Funds will also transmit to the Unaffiliated Underlying Fund a list of the names of each Fund of Funds Affiliate and Underwriting Affiliate. The Fund of Funds will notify the Unaffiliated Underlying Fund of any changes to the list as soon as reasonably practicable after a change occurs. The Unaffiliated Underlying Fund and the Fund of Funds will maintain and preserve a copy of the order, the agreement, and the list with any updated information for the duration of the investment and for a period of not less than 6 years thereafter, the first 2 years in an easily accessible place.

9. Before approving any advisory contract under section 15 of the Act, the Board of each Fund of Funds, including a majority of the Disinterested Trustees, shall find that the advisory fees charged under the advisory contract are based on services provided that are in addition to, rather than duplicative of, services provided under the advisory contract(s) of any Underlying Fund in which the Fund of Funds may invest. Such finding, and the basis upon which the finding was made, will be recorded fully in the minute books of the appropriate Fund of Funds.

10. Each Manager will waive fees otherwise payable to it by a Fund of Funds in an amount at least equal to any compensation (including fees received pursuant to any plan adopted by an Unaffiliated Underlying Fund under rule 12b–1 under the Act) received from an Unaffiliated Fund by the Manager, or an affiliated person of the Manager, other than any advisory fees paid to the Manager or its affiliated person by the Unaffiliated Fund, in connection with the investment by the Fund of Funds in the Unaffiliated Fund. Any Sub-Adviser will waive fees otherwise payable to the Sub-Adviser, directly or indirectly, by the Fund of Funds in an amount at least equal to any compensation received from an Unaffiliated Fund by the Sub-Adviser, or an affiliated person of the Sub-Adviser, other than any advisory fees paid to the Sub-Adviser or its affiliated person by the Unaffiliated Fund, in connection with the investment by the Fund of Funds in the Unaffiliated Fund made at the direction of the Sub-Adviser. In the event that the Sub-Adviser waives fees, the benefit of the waiver will be passed through to the Fund of Funds.

11. With respect to Registered Separate Accounts that invest in a Fund of Funds, no sales load will be charged at the Fund of Funds level or at the Underlying Fund level. Other sales charges and service fees, as defined in rule 2830 of the Conduct Rules of the NASD, if any, will only be charged at the Fund of Funds level or at the Underlying Fund level, not both. With respect to other investments in a Fund of Funds, any sales charges and/or service fees charged with respect to shares of a Fund of Funds will not exceed the limits applicable to funds of funds set forth in rule 2830 of the Conduct Rules of the NASD.

12. No Underlying Fund will acquire securities of any other investment company or company relying on section 3(c)(1) or 3(c)(7) of the Act in excess of the limits contained in section 12(d)(1)(A) of the Act, except to the extent that such Underlying Fund: (a) Receives securities of another investment company as a dividend or as a result of a plan of reorganization of a company (other than a plan devised for the purpose of evading section 12(d)(1) of the Act); or (b) acquires (or is deemed to have acquired) securities of another investment company pursuant to exemptive relief from the Commission permitting such Underlying Fund to: (i) Acquire securities of one or more affiliated investment companies for short-term cash management purposes, or (ii) engage in interfund borrowing and lending transactions.

13. The Board of any Fund of Funds and any Unaffiliated Underlying Fund will satisfy the fund governance standards as defined in rule 0–1(a)(7) under the Act by the compliance date for the rule.

For the Commission, by the Division of Investment Management, pursuant to delegated authority.

Margaret H. McFarland,

Deputy Secretary.

[FR Doc. E5–4488 Filed 8–16–05; 8:45 am]

BILLING CODE 8010–01–P

SECURITIES AND EXCHANGE COMMISSION

[Release No. 34–52237; File No. SR–ISE–2005–28]

Self-Regulatory Organizations; International Securities Exchange, Inc.; Order Granting Approval of a Proposed Rule Change and Amendment No. 1 Thereto Relating to Fee Changes for Transactions in Options on the Standard & Poor's Depository Receipts® on a Retroactive Basis

August 10, 2005.

On May 20, 2005, the International Securities Exchange, Inc. (''ISE'' or ''Exchange'') filed with the Securities and Exchange Commission (''Commission''), pursuant to Section 19(b)(1) of the Securities Exchange Act of 1934 (''Act'')[1] and Rule 19b-4 thereunder,[2] a proposed rule change to retroactively establish, as of January 10, 2005, a $.10 per contract surcharge fee for certain transactions in options based on the Standard & Poor's Depository Receipts®, or SPDRs® (''SPDRs'').[3] On June 15, 2005, the Exchange filed Amendment No. 1 to the proposed rule change.[4] The proposed rule change and Amendment No. 1 were published for comment in the **Federal Register** on July 11, 2005.[5] No comments were received regarding the proposal, as amended. This order approves the proposed rule change, as amended.

The Exchange's Schedule of Fees currently has in place a surcharge fee item that calls for a $.10 per contract fee for transactions in certain licensed products. The Exchange has entered into a license agreement with Standard and Poor's, a unit of McGraw-Hill Companies, Inc., authorizing the Exchange to list SPDR options. The Exchange proposes to adopt this fee for transactions in SPDR options in order to defray the licensing costs. The Exchange believes that charging the participants that trade these instruments is the most equitable means of recovering the costs of the license. However, because competitive pressures in the industry have resulted in the waiver of transaction fees for Public Customers,[6] the Exchange proposes to exclude Public Customer Orders[7] from this surcharge fee. Accordingly, this surcharge fee will only be charged to Exchange members with respect to non-Public Customer Orders (*e.g.*, Market Maker and Firm Proprietary orders) and shall apply to Linkage Orders under a pilot program that is set to expire on July 31, 2006.[8]

Additionally, the Commission notes that the Exchange has represented that, if it is concluded by the courts after all avenues of appeal that no license from Standard and Poor's was required by the Exchange to list SPDR options, then upon any refund by Standard and Poor's to the ISE, the Exchange shall submit a rule filing to the Commission providing for a reimbursement of the fees paid by members to the Exchange as a result of this surcharge.

The Commission finds that the proposed rule change is consistent with the requirements of the Act and the rules and regulations thereunder applicable to a national securities exchange[9] and, in particular, the requirements of Section 6(b) of the Act[10] and the rules and regulations thereunder. Specifically, the Commission finds that the proposal to retroactively establish a $.10 per contract surcharge fee for certain transactions in options on SPDRs that occurred on the ISE between January 10, 2005 and May 19, 2005,[11] is consistent with Section 6(b)(4) of the Act,[12] which requires the equitable allocation of reasonable dues, fees, and other charges among Exchange members and other persons using Exchange facilities. The Commission believes that, because the options on SPDRs have been listed and traded on the Exchange since January 10, 2005, the retroactive extension of the surcharge fee to all applicable transactions occurring between January 10, 2005 and May 19, 2005 is equitable in order to defray ISE's licensing costs.

It is therefore ordered, pursuant to Section 19(b)(2) of the Act,[13] that the proposed rule change (File No. SR–ISE–2005–28), as amended, is approved.

For the Commission, by the Division of Market Regulation, pursuant to delegated authority.[14]

Margaret H. McFarland,

Deputy Secretary.

[FR Doc. E5–4462 Filed 8–16–05; 8:45 am]

BILLING CODE 8010–01–P

[1] 15 U.S.C. 78s(b)(1).

[2] 17 CFR 240.19b–4.

[3] The Exchange filed with the Commission an identical fee change on May 20, 2005 (SR–ISE–2005–06), which was immediately effective as of that date under Section 19(b)(3)(A) of the Act and Rule 19b–4(f)(2) thereunder. *See* Securities Exchange Act Release No. 51901 (June 22, 2005), 70 FR 37455 (June 29, 2005). Because the Exchange sought to apply the same surcharge fee on a retroactive basis as of January 10, 2005, the Exchange submitted this proposal to the Commission under Section 19(b)(2) of the Act.

[4] In Amendment No. 1, the Exchange made non-substantive changes to clarify the purpose for the fee change.

[5] *See* Securities Exchange Act Release No. 51948 (June 30, 2005), 70 FR 39832.

[6] Public Customer is defined in ISE Rule 100(a)(32) as a person that is not a broker or dealer in securities.

[7] Public Customer Order is defined in ISE Rule 100(a)(33) as an order for the account of a Public Customer.

[8] *See* ISE Rule 1900(10) (defining Linkage Orders). The surcharge fee will apply to the following Linkage Orders: Principal Acting as Agent Orders and Principal Orders. The expiration date for this pilot program was recently extended from July 31, 2005 to July 31, 2006. *See* Exchange Act Release No. 34–52168 (July 29, 2005) (File No. SR–ISE–2005–32).

[9] In approving this proposal, the Commission has considered the proposed rule's impact on efficiency, competition, and capital formation. 15 U.S.C. 78c(f).

[10] 15 U.S.C. 78f(b).

[11] *See supra* note 3.

[12] 15 U.S.C. 78f(b)(4).

[13] *Id.*

[14] 17 CFR 200.30–3(a)(12).

SECURITIES AND EXCHANGE COMMISSION

[Release No. 34–52238; File No. SR–PCX–2005–89]

Self-Regulatory Organizations; Pacific Exchange, Inc.; Notice of Filing and Immediate Effectiveness of Proposed Rule Change To Amend the Market Maker Fee

August 10, 2005.

Pursuant to Section 19(b)(1) of the Securities Exchange Act of 1934 (''Act''),[1] and Rule 19b–4 thereunder,[2] notice is hereby given that on July 29, 2005, the Pacific Exchange, Inc. (''PCX'' or ''Exchange'') filed with the Securities and Exchange Commission (''Commission'') the proposed rule change as described in Items I, II, and III below, which Items have been prepared by the PCX. The PCX has designated this proposal as one establishing or changing a due, fee, or other charge imposed by a self-regulatory organization pursuant to Section 19(b)(3)(A)(ii) of the Act,[3] and Rule 19b–4(f)(2) thereunder,[4] which renders the proposal effective upon filing with the Commission. The Commission is publishing this notice to solicit comments on the proposed rule change from interested persons.

I. Self-Regulatory Organization's Statement of the Terms of Substance of the Proposed Rule Change

The PCX proposes to amend the Market Maker Fee in its Schedule of Fees and Charges. The text of the proposed rule change is available on the Exchange's Internet Web site (*http://www.pacificex.com*), at the Exchange's

[1] 15 U.S.C. 78s(b)(1).

[2] 17 CFR 240.19b–4.

[3] 15 U.S.C. 78s(b)(3)(A)(ii).

[4] 17 CFR 240.19b–4(f)(2).

Office of the Secretary, and at the Commission's Public Reference Room.

II. Self-Regulatory Organization's Statement of the Purpose of, and Statutory Basis for, the Proposed Rule Change

In its filing with the Commission, the PCX included statements concerning the purpose of, and basis for, the proposed rule change and discussed any comments it received on the proposed rule change. The text of these statements may be examined at the places specified in Item IV below. The PCX has prepared summaries, set forth in Sections A, B, and C below, of the most significant aspects of such statements.

A. Self-Regulatory Organization's Statement of the Purpose of, and Statutory Basis for, the Proposed Rule Change

1. Purpose

The PCX proposes to amend the Market Maker Fee. Currently, the fee is $1,750 per month, and the fee is prorated for each day the Market Maker trades at the PCX. The PCX proposes to reduce the Market Maker Fee to $1,500 per month and no longer prorate the fee based on daily usage. By no longer prorating the fee, the PCX would save a substantial amount of administrative time that is associated with tracking the daily access of each Market Maker. It also would allow the PCX to automate the billing of this fee. According to the PCX, based upon past history of overall usage by the PCX Market Makers, the reduction of the fee by $250 per month, coupled with the elimination of the current policy to prorate the fee, would have little, if any, positive or negative impact on revenue for the Exchange.

2. Statutory Basis

The Exchange believes that the proposed rule change is consistent with Section 6(b) of the Act,[5] in general, and furthers the objectives of Section 6(b)(4) of the Act,[6] in particular, in that it provides for the equitable allocation of reasonable dues, fees, and other charges among its members.

B. Self-Regulatory Organization's Statement on Burden on Competition

The Exchange does not believe that the proposed rule change will impose any burden on competition that is not necessary or appropriate in furtherance of the purpose of the Act.

C. Self-Regulatory Organization's Statement on Comments on the Proposed Rule Change Received From Members, Participants, or Others

The Exchange has neither solicited nor received written comments on the proposed rule change.

III. Date of Effectiveness of the Proposed Rule Change and Timing for Commission Action

The foregoing proposed rule change has become effective pursuant to Section 19(b)(3)(A)(ii) of the Act,[7] and paragraph (f)(2) of Rule 19b–4 thereunder,[8] because it establishes or changes a due, fee, or other charge imposed by the Exchange. At any time within 60 days of the filing of the proposed rule change, the Commission may summarily abrogate such rule change if it appears to the Commission that such action is necessary or appropriate in the public interest, for the protection of investors, or otherwise in furtherance of the purposes of the Act.

IV. Solicitation of Comments

Interested persons are invited to submit written data, views, and arguments concerning the foregoing, including whether the proposed rule change is consistent with the Act. Comments may be submitted by any of the following methods:

Electronic Comments

- Use the Commission's Internet comment form (*http://www.sec.gov/rules/sro.shtml*); or
- Send an e-mail to *rule-comments@sec.gov.* Please include File Number SR–PCX–2005–89 on the subject line.

Paper Comments

- Send paper comments in triplicate to Jonathan G. Katz, Secretary, Securities and Exchange Commission, Station Place, 100 F Street, NE., Washington, DC 20549–9303.

All submissions should refer to File Number SR–PCX–2005–89. This file number should be included on the subject line if e-mail is used. To help the Commission process and review your comments more efficiently, please use only one method. The Commission will post all comments on the Commission's Internet Web site (*http://www.sec.gov/rules/sro.shtml*). Copies of the submission, all subsequent amendments, all written statements with respect to the proposed rule change that are filed with the Commission, and all written communications relating to the proposed rule change between the Commission and any person, other than those that may be withheld from the public in accordance with the provisions of 5 U.S.C. 552, will be available for inspection and copying in the Commission's Public Reference Room. Copies of such filing also will be available for inspection and copying at the principal office of the Exchange. All comments received will be posted without change; the Commission does not edit personal identifying information from submissions. You should submit only information that you wish to make available publicly. All submissions should refer to File Number SR–PCX–2005–89 and should be submitted on or before September 7, 2005.

For the Commission, by the Division of Market Regulation, pursuant to delegated authority.[9]

Margaret H. McFarland,

Deputy Secretary.

[FR Doc. E5–4489 Filed 8–16–05; 8:45 am]

BILLING CODE 8010–01–P

[5] 15 U.S.C. 78f(b).

[6] 15 U.S.C. 78f(b)(4).

[7] 15 U.S.C. 78s(b)(3)(A)(ii).

[8] 17 CFR 240.19b–4(f)(2).

[9] 17 CFR 200.30–3(a)(12).

SECURITIES AND EXCHANGE COMMISSION

[Release No. 34–52241; File No. SR–PCX–2005–31]

Self-Regulatory Organizations; Pacific Exchange, Inc.; Order Approving a Proposed Rule Change and Amendments No. 1, 2, and 3 Thereto To Permit Lead Market Makers To Operate Remotely

August 11, 2005.

I. Introduction

On March 15, 2005, the Pacific Exchange, Inc. (''PCX'' or ''Exchange'') filed with the Securities and Exchange Commission (''Commission''), pursuant to Section 19(b)(1) of the Securities Exchange Act of 1934 (''Act'')[1] and Rule 19b–4 thereunder,[2] a proposed rule change to amend its rules to allow Lead Market Makers (''LMMs'') to operate from a remote location. The Exchange submitted Amendments No. 1, 2, and 3 on May 27, 2005,[3] June 6, 2005,[4] and

[1] 15 U.S.C. 78s(b)(1).

[2] 17 CFR 240.19b–4.

[3] Amendment No. 1 makes clarifying changes to the purpose statement and rule text. Amendment No. 1 replaces the original rule filing in its entirety.

[4] Amendment No. 2 makes a technical correction to the rule text in Exhibit 5.

June 22, 2005,[5] respectively. On July 6, 2005, the proposal, as amended, was published for comment in the **Federal Register**.[6] No comment letters were received on the proposal. The Commission is approving the proposed rule change, as amended.

II. Description of the Proposal

The proposed rule change amends the Exchange's trading rules in order to allow OTP Holders and OTP Firms who conduct Lead Market Making activity to do so whether on the trading floor or from a remote location. Currently, the PCX rules require a Lead Market Maker be physically present on the trading floor in order to conduct Lead Market Maker activities. With the roll out of PCX Plus, the Exchange's electronic trading system, the Exchange seeks to introduce a platform by which Lead Market Makers may either be present on the trading floor or may serve their role from a remote location. LMMs will retain their guaranteed participation allowances and opportunities to participate in open outcry should they choose to work from the physical trading floor. For those LMMs who choose to conduct their business from remote locations, they will not be able to inure the benefits of the current open outcry strategies and will be granted their guaranteed participation rights solely based upon the size and price that they disseminate via the PCX Plus System.

In order to allow LMMs to operate from a remote location, the Exchange is proposing a number of changes to its Rules. First, PCX Rule 6.32 is being amended to add LMMs to the definition of who may make transactions through the facilities of the Exchange. This change will allow LMMs who are not physically present on the trading floor to perform the duties and obligations from a remote location. Language in PCX Rule 6.32 is also being changed to allow for trades executed by an LMM through a facility of the Exchange, in addition to in-person trades, to be eligible to receive market maker margin. Presently only LMM trades that are executed on the floor of the Exchange or those that meet the criteria of PCX Rule 6.32(c) are eligible for market maker margin. Under the proposal, an LMM acting from a remote location would still be required to meet all of the obligations of an LMM as stated in PCX Rule 6.82.

Second, the Exchange is proposing to eliminate the prohibition in PCX Rule 6.82(a)(1) that Remote Market Makers (''RMMs'') are not eligible to act as LMMs from a location off the trading floor. The Exchange believes that this change is necessary to permit LMMs to operate from a remote location and to eliminate any uncertainty that may exist in interpreting PCX Rules. A firm that operates at the PCX can have different employees who function as RMM and LMM, however, under proposed amendments to PCX Rule 6.35(h)(4), these individuals are prohibited from trading the same option issues.

Fourth, as part of allowing Lead Market Makers to operate from a remote location, the Exchange is proposing to eliminate PCX Rule 6.82(h)(1). This rule currently allows the Lead Market Maker to perform Order Book Official functions. Since an Order Book Official is only present on the trading floor (PCX Plus does not contain a functionality similar to that which is performed by an Order Book Official), this function is not needed should a Lead Market Maker choose to operate from a remote location.

Finally, the provisions of the PCX Rules that permit Lead Market Makers to perform certain functions that require them to be physically present on the trading floor (*i.e.* PCX Rule 6.82(h)(3)) will only be permitted should the Lead Market Maker remain physically present on the trading floor. These functions will not be permitted should the Lead Market Maker decide to operate from a remote location.

III. Discussion

After careful review, the Commission finds that the proposed rule change, as amended, is consistent with the requirements of the Act and the rules and regulations thereunder applicable to a national securities exchange[7] and, in particular, the requirements of Section 6 of the Act.[8] Specifically, the Commission finds that the proposal is consistent with Section 6(b)(5) of the Act,[9] in that the proposal has been designed to promote just and equitable principles of trade, and to protect investors and the public interest.

A. Market Maker Obligations

PCX Rule 6.32 is being amended to allow for trades executed by an LMM through a facility of the Exchange, in addition to in-person trades, to be eligible to receive market maker margin. The Commission believes that a Market Maker must have an affirmative obligation to hold itself out as willing to buy and sell options for its own account on a regular or continuous basis to justify this favorable treatment. The Commission believes that PCX's rules impose such affirmative obligations LMMs that choose to operate remotely and notes that under the proposal, an LMM acting from a remote location would still be required to meet all of the obligations of an LMM set forth in PCX Rule 6.82.

B. Affiliated RMMs and LMMs

In addition, the Exchange is proposing to eliminate the prohibition in PCX Rule 6.82(a)(1) that RMMs are not eligible to act as LMMs from a location off the trading floor. A firm that operates at the PCX can have different employees who function as RMM and LMM. Under the proposed new rules, however, these individuals would be prohibited from trading the same option issues.[10] The Commission believes that these limitations should help to reduce the opportunity for conflicts of interest.

C. Order Book Official Function

The Exchange is proposing to eliminate PCX Rule 6.82(h)(1), which allows LMMs to perform Order Book Official functions. Since an Order Book Official is only present on the trading floor, an LMM that chooses to operate from a remote location would not be able to fulfill this function. The Exchange has represented, and the Commission expects, that for those individuals who continue to trade via open outcry on the trading floor, the Exchange will provide the necessary staff to effectively supervise trading.[11]

IV. Conclusion

It is therefore ordered, pursuant to Section 19(b)(2) of the Act,[12] that the proposed rule change (File No. SR–PCX–2005–31), as amended, is hereby approved.

For the Commission, by the Division of Market Regulation, pursuant to delegated authority.[13]

Margaret H. McFarland,

Deputy Secretary.

[FR Doc. E5–4491 Filed 8–16–05; 8:45 am]

BILLING CODE 8010–01–P

[5] Amendment No. 3 clarifies how a Lead Market Maker will garner their guaranteed trade allocations by adding the words ''via the PCX Plus system'' at the end of the second paragraph in the purpose statement. Amendment No. 3 also eliminates the deletion of PCX Rule 6.37(f)(1).

[6] *See* Securities Exchange Act Release No. 51937 (June 29, 2005), 70 FR 38997.

[7] The Commission has considered the amended proposed rule change's impact on efficiency, competition and capital formation. 15 U.S.C. 78c(f).

[8] 15 U.S.C. 78f.

[9] 15 U.S.C. 78f(b)(5).

[10] *See* Proposed PCX Rule 6.35(h)(4).

[11] The Exchange has also represented that at this time no LMM is currently performing the functions of an Order Book Official nor has any LMM expressed an interest in doing so.

[12] 15 U.S.C. 78s(b)(2).

[13] 17 CFR 200.30–3(a)(12).

SECURITIES AND EXCHANGE COMMISSION

[Release No. 34–52239; File No. SR–Phlx–2005–14]

Self-Regulatory Organizations; Philadelphia Stock Exchange, Inc.; Notice of Filing of Proposed Rule Change and Amendment No. 1 Thereto Relating to Order Matching at the Opening in PACE

August 11, 2005.

Pursuant to Section 19(b)(1) of the Securities Exchange Act of 1934 (''Act'')[1], and Rule 19b–4[2] thereunder, notice is hereby given that on March 10, 2005, the Philadelphia Stock Exchange, Inc. (''Phlx'' or ''Exchange'') filed with the Securities and Exchange Commission (''Commission'') the proposed rule change as described in Items I, II, and III, below, which Items have been prepared by the Phlx. On July 28, 2005, the Phlx submitted Amendment No. 1 to the proposed rule change.[3] The Commission is publishing this notice to solicit comments on the proposed rule change, as amended, from interested persons.

I. Self-Regulatory Organization's Statement of the Terms of Substance of the Proposed Rule Change

The Phlx proposes to amend Phlx Rule 229 to permit PACE[4] to modify the opening process to match certain orders, described below, to each other, where possible, instead of matching such orders with the specialist. Specifically, the Exchange proposes to modify Phlx Rule 229, Supplementary Materials .06 and .10(a)–(b), to effect the matching of such orders. The Exchange also proposes to delete Phlx Rule 229, Supplementary Material .11.

The text of amended Phlx Rule 229 is set forth below. Brackets indicate deletions; italics indicate proposed new text.

Rule 229, Supplementary Material:

.01–.05 No change.

.06 Market orders [(round-lots, odd-lots and PRL's up to 2099 shares)] entered prior to the opening will be executed at the New York market opening price, *unless such order is marked sell short or is laid off at another market center prior to the actual New York market opening.* [To be guaranteed an execution at the New York market opening price, such orders must be received at least two minutes prior to the actual New York market opening.] *Market orders that are equal to or smaller than the Directed Specialist's automatic execution guarantee size, or larger orders entered two minutes or more (or such shorter time, for example, one minute or more, as chosen by the Directed Specialist for all securities traded by the Directed Specialist) prior to the actual New York market opening will be executed automatically against:*

(a) *available contra-side orders received by the same Directed Specialist that are to be executed at the opening, otherwise they will be executed automatically against the Directed Specialist; or*

(b) *the Directed Specialist, if such orders are odd-lot orders, partial round lot all-or-none orders, round lot all-or-none orders when a single contra-side order with sufficient volume is not available and the odd lot portion of PRL orders executed in (a) above.*

In the case of delayed openings, execution will occur at the New York opening price. *Market orders not executed automatically, as above, will be available, after the opening, to be executed as an existing order pursuant to Supplementary Material .04A(b)(i) above, or receive a professional execution in accordance with Supplementary Material, .10(b) below.* [Execution of market orders of a size greater than 2099 shares and up to 5000 shares which the specialist agrees to accept must be received at least three minutes prior to the actual New York Market opening price.]

.07–.09 No change.

.10(a)(i)–(iii) No change.

[In order for round-lot limit orders up to 500 shares and the round-lot portion of PRL limit orders up to 599 shares to be guaranteed an execution at the New York opening price, such orders must be received at least two minutes prior to the actual New York market opening and 1000 or more shares must open on the New York market at the limit price. The obligations of a specialist under the Rule for the execution of round-lot limit orders up to 500 shares and the round-lot portion of PRL limit orders up to 599 shares shall not be altered by the acceptance of any other limit orders by such specialist.]

(iv) Limit orders, unless such orders are marked sell short or laid off at another market center prior to the actual New York market opening, that are traded through by the New York market opening price and that are entered two minutes or more (or such shorter time, for example, one minute or more, as chosen by the Directed Specialist for all securities traded by the Directed Specialist) prior to the actual New York market opening will be executed automatically, at the New York market opening price, against:

(A) *available contra-side orders received by the same Directed Specialist that are to be executed at the opening, otherwise they will be executed automatically against the Directed Specialist; or*

(B) *the Directed Specialist, if such orders are odd-lot orders, partial round lot all-or-none orders, round lot all-or-none orders when a single contra-side order with sufficient volume is not available and the odd lot portion of PRL orders executed in (A) above.*

Limit orders not executed automatically, as above, will be available, after the opening, to be executed as an existing order pursuant to Supplementary Material .04A(b)(i) above, or receive a professional execution in accordance with Supplementary Material, .10(b) below.

Remainder of .10(a) No change.

.10(b) Professional Execution Standards—[Market orders and round-lot limit orders of 600 to 2000 shares, and PRL's of 601 to 2099 shares and such limit orders of greater size up to 5000 shares that the specialist may accept must be entered at least three (3) minutes prior to the opening in order to be guaranteed the opening price.]

Remainder of .10(b) No change.

.10(c) No change.

.11 [Upon written approval of a Floor Procedure Committee member, the specialist will have the right to refuse prior to the actual New York opening, round-lot and PRL orders which create a net long or net short position in excess of 1000 shares. Prior to granting such approval, however, the alternate specialists in such security must be requested to accept a portion of such orders as may be deemed appropriate by the Floor Procedure Committee member.] *Reserved.*

.12–.22 No change.

II. Self-Regulatory Organization's Statement of the Purpose of, and Statutory Basis for, the Proposed Rule Change

In its filing with the Commission, the Phlx included statements concerning the purpose of and basis for the proposed rule change and discussed any comments it received on the proposed rule change. The text of these statements may be examined at the places specified in Item IV below. The Phlx has prepared

[1] 15 U.S.C. 78s(b)(1).

[2] 17 CFR 240.19b–4.

[3] Amendment No. 1, which replaced and superseded the original filing in its entirety, included additional text in the purpose section to further clarify the description and operation of the proposed rule change, and also included a minor edit to the text of Phlx Rule 229.

[4] PACE is the Exchange's automated order routing, delivery, execution and reporting system for equities. *See* Phlx Rule 229.

summaries, set forth in Sections A, B, and C below, of the most significant aspects of such statements.

A. Self-Regulatory Organization's Statement of the Purpose of, and Statutory Basis for, the Proposed Rule Change

1. Purpose

The purpose of the proposed rule change is to increase automated order handling and remove the specialist in situations where orders could otherwise match at the opening. Currently, when PACE automatically executes certain orders received before the opening at the opening price, all such orders are matched with the specialist to whom the order is directed. The net result of this is that all such orders receive an execution (against the Directed Specialist [5]) and the Directed Specialist may be left with a position, which is the result of the specialist's interaction with the imbalance of buy or sell orders, as applicable.

The Exchange proposes to modify the matching functionality so that certain Eligible Orders, described below, received by each Directed Specialist that could be matched against each other would do so instead of matching with the Directed Specialist. In other words, such Eligible Orders would still receive an execution, but the execution would not involve the participation of a dealer. Directed Specialists would continue to match against other Eligible Orders, as described below, as well as any imbalance of their directed orders that could not match against other orders. Additionally, the Exchange is proposing to modify the text of Phlx Rule 229 to depict how the proposed matching functionality will operate, including clearly indicating what orders would be eligible for matching at the opening price and indicating against whom such orders would be matched.

Market Orders. Under this proposal, certain market and limit orders received before the opening will be matched at the New York market [6] opening price.[7] In order to be matched at the New York opening price, market orders could not be marked sell short or laid off [8] (*i.e.*, orders that are being sent to other marketplaces for execution and appropriately marked by the specialist within PACE) before the actual opening. In addition, if they are equal to or smaller than the Directed Specialist's automatic execution guarantee size, they would need to be entered before the actual New York market opening. If they are larger than the Directed Specialist's automatic execution guarantee size, they would need to be entered two minutes or more (or such shorter time, for example, one minute or more, as chosen by the Directed Specialist for all securities traded by the Directed Specialist) prior to the actual New York market opening.[9] (Market orders that are eligible to be matched as described in this paragraph are referred to as ''Eligible Market Orders''). The Phlx also proposes to add language to the text of Phlx Rule 229, Supplementary Material .06, to implement the preceding standards and proposes to remove certain existing language relating to the size of market orders and the receipt time required to receive the New York opening price that conflicts with the proposed language.

Limit Orders. The Exchange's proposal would also provide that limit orders, in order to be matched at the New York opening price, could not be marked sell short or laid off before the actual opening.[10] In addition, they would have to be traded through by the New York market opening price and must be entered two minutes or more (or such shorter time, for example, one minute or more, as chosen by the Directed Specialist for all securities traded by the Directed Specialist) prior to the actual New York market opening.[11] (Limit orders that are eligible to be matched as described in this paragraph, along with Eligible Market Orders, are ''Eligible Orders''). The Phlx proposes to add language to the text of Phlx Rule 229, Supplementary Material .10(a), to implement the preceding standards and proposes to remove certain existing language relating to the size of limit orders, the receipt time required, and the number of shares needed to print on the New York market to receive the New York opening price, which all conflict with the proposed language.

Matching. The Exchange proposes to match Eligible Orders received by each Directed Specialist as follows: odd-lot orders, partial round lot (''PRL'') [12] all-or-none (''AON'') orders, round lot AON orders when a single contra-side order with sufficient volume is not available, and the odd lot portion of PRL Eligible Orders would all be matched against the Directed Specialist. The Phlx is not proposing to match odd-lot orders, PRL AON orders, and the odd-lot portion of PRL Eligible Orders against other Eligible Orders because the Phlx wishes to prevent the creation of yet further orders with odd-lot portions as the Phlx believes that order entry firms prefer not to have their round lot orders broken into odd-lots and receive odd-lot executions. The remaining Eligible Orders received by a Directed Specialist would be matched against each other, with any imbalance matching against the Directed Specialist.

The Exchange's matching algorithm would operate in such a way as to minimize the number of different orders that any one order will match against. The algorithm would build buy side and sell side order lists from the Eligible Orders, sorting them by descending volume with AON orders first. After the lists are built, matching would be initiated with the largest volume AON order first (buy or sell). The first order would then be matched against opposing orders, in order, or if mandated by the rule, against the Directed Specialist. This process would then be repeated by selecting the next order in volume priority until all Eligible Orders are filled. If two orders have the same volume, market orders would receive priority before limit orders and if both orders are the same type (market or limit), then priority would be based on time of entry. The Exchange believes that this matching algorithm should minimize the number of customer reports that any one order will receive, which the Exchange believes should help to keep the costs associated with such multiple reports to a minimum. However, regardless of the

[5] The term ''Directed Specialist'' has the same meaning as in Phlx Rule 229A(b)(3), when there is more than one specialist assigned in a security. When there is only one specialist assigned in a security, the term Directed Specialist means that sole specialist.

[6] The ''New York market'' refers to the listing market.

[7] *See* Phlx Rule 229, Supplementary Material .06.

[8] *See* 17 CFR 240.11Ac1–4(c)(5).

[9] The PACE system historically only executed market orders equal to or smaller than the Directed Specialist's automatic execution guarantee size entered before the opening at the New York opening price. As the PACE functionality evolved, certain limit orders and larger sizes were executed at the opening price, but the Phlx determined to limit those additional sizes and the additional type to those entered a specific time before the opening in order to give the Directed Specialist time to assess and handle the risk associated with executing those orders. At this time, the Phlx has determined not to change the type and size of orders that are subject to a time restriction, only to change the party against whom those orders match against.

[10] *See* Phlx Rule 229, Proposed Supplementary Material .10(a)(iv).

[11] The Exchange understands that limit orders priced at the opening price are not guaranteed an execution at the opening on the primary market. *See, e.g.*, American Stock Exchange Rule 108(a) and (b)(1) (providing that market orders, which must receive an execution at the opening price, have precedence over limit orders and that only limit orders that are priced better than the opening price are to be treated as market orders). The Exchange has determined not to extend the guarantee under this proposed rule change to limit orders priced at the opening price.

[12] ''Partial round lot'' means a combined round-lot and odd-lot order. *See* Phlx Rule 229.

particular method employed to match these orders, all Eligible Orders would be matched at the opening price immediately following the New York opening.

Further, the Exchange proposes to delete existing language in Phlx Rule 229, Supplementary Material .10(b), relating to the size of market and limit orders and the receipt time required to receive the New York opening price as the treatment of such orders will be covered in Supplementary Materials .06 and .10(a). Finally, the Exchange proposes to delete Supplementary Material .11 of Phlx Rule 229, relating to the refusal of orders, as the Phlx believes that specialists today have sufficient methods available to them to manage the risk associated with orders received before the opening.

2. Statutory Basis

The Exchange believes that its proposal, as amended, is consistent with Section 6(b) and Section 11A(a)(1)(C) of the Act [13] in general, and furthers the objectives of Section 6(b)(5) and Section 11A(a)(1)(C)(v) of the Act [14] in particular, in that it should promote just and equitable principles of trade, remove impediments to and perfect the mechanism of a free and open market, and protect investors and the public interest by increasing the number of investors' orders that are executed at the opening without the participation of a dealer.

B. Self-Regulatory Organization's Statement on Burden on Competition

The Exchange does not believe that the proposed rule change, as amended, will impose any inappropriate burden on competition.

C. Self-Regulatory Organization's Statement on Comments on the Proposed Rule Change Received From Members, Participants, or Others

No written comments were either solicited or received.

III. Date of Effectiveness of the Proposed Rule Change and Timing for Commission Action

Within 35 days of the date of publication of this notice in the **Federal Register** or within such longer period (i) as the Commission may designate up to 90 days of such date if it finds such longer period to be appropriate and publishes its reasons for so finding or (ii) as to which the Exchange consents, the Commission will:

(A) by order approve such proposed rule change, as amended, or

(B) institute proceedings to determine whether the proposed rule change, as amended, should be disapproved.

IV. Solicitation of Comments

Interested persons are invited to submit written data, views, and arguments concerning the foregoing, including whether the proposed rule change, as amended, is consistent with the Act. Comments may be submitted by any of the following methods:

Electronic Comments

- Use the Commission's Internet comment form (*http://www.sec.gov/rules/sro.shtml*); or
- Send an e-mail to *rule-comments@sec.gov.* Please include File Number SR–Phlx–2005–14 on the subject line.

Paper Comments

- Send paper comments in triplicate to Jonathan G. Katz, Secretary, Securities and Exchange Commission, Station Place, 100 F Street, NE., Washington, DC 20549–9303.

All submissions should refer to File Number SR–Phlx–2005–14. This file number should be included on the subject line if e-mail is used. To help the Commission process and review your comments more efficiently, please use only one method. The Commission will post all comments on the Commission's Internet Web site (*http://www.sec.gov/rules/sro.shtml*). Copies of the submission, all subsequent amendments, all written statements with respect to the proposed rule change that are filed with the Commission, and all written communications relating to the proposed rule change between the Commission and any person, other than those that may be withheld from the public in accordance with the provisions of 5 U.S.C. 552, will be available for inspection and copying in the Commission's Public Reference Room. Copies of the filing also will be available for inspection and copying at the principal office of the Phlx. All comments received will be posted without change; the Commission does not edit personal identifying information from submissions. You should submit only information that you wish to make available publicly. All submissions should refer to File Number SR–Phlx–2005–14 and should be submitted on or before September 7, 2005.

For the Commission, by the Division of Market Regulation, pursuant to delegated authority.[15]

Margaret H. McFarland,

Deputy Secretary.

[FR Doc. E5–4490 Filed 8–16–05; 8:45 am]

BILLING CODE 8010–01–P

[13] 15 U.S.C. 78f(b) and 15 U.S.C. 78k–1(a)(1)(C).

[14] 15 U.S.C. 78f(b)(5) and 15 U.S.C. 78k–1(a)(1)(C)(v).

[15] 17 CFR 200.30–3(a)(12).

SMALL BUSINESS ADMINISTRATION

Notice of Action Subject to Intergovernmental Review Under Executive Order 12372

AGENCY: U.S. Small Business Administration.

ACTION: Notice of action subject to intergovernmental review.

SUMMARY: The Small Business Administration (SBA) is notifying the public that it intends to grant the pending applications of 42 existing Small Business Development Centers (SBDCs) for refunding on January 1, 2006, subject to the availability of funds. Fourteen states do not participate in the EO 12372 process therefore, their addresses are not included. A short description of the SBDC program follows in the supplementary information below.

The SBA is publishing this notice at least 90 days before the expected refunding date. The SBDCs and their mailing addresses are listed below in the address section. A copy of this notice also is being furnished to the respective State single points of contact designated under the Executive Order. Each SBDC application must be consistent with any area-wide small business assistance plan adopted by a State-authorized agency.

DATES: A State single point of contact and other interested State or local entities may submit written comments regarding an SBDC refunding within 30 days from the date of publication of this notice to the SBDC.

ADDRESSES:

Addresses of Relevant SBDC State Directors

Mr. Greg Panichello, State Director, Salt Lake Community College, 9750 South 300 West, Sandy, UT 94070, (801) 957–3493.

Mr. John Lenti, State Director, University of South Carolina, 1710 College Street, Columbia, SC 29208, (803) 777–4907.

Mr. Henry Turner, Executive Director, Howard University, 2600 6th St., NW., Room 125, Washington, DC 20059, (202) 806–1550.

Mr. Herbert Thweatt, Director, American Samoa Community College,

P.O. Box 2609, Pago Pago, American Samoa 96799, 011–684–699–9155.

Ms. Kelly Manning, State Director, Office of Business Development, 1625 Broadway, Suite 1710, Denver, CO 80202, (303) 892–3864.

Mr. Jerry Cartwright, State, Director, University of West Florida, 401 East Chase Street, Suite 100, Pensacola, FL 32502, (850) 473–7800.

Mr. Allan Adams, Acting State Director, University of Georgia, 1180 East Broad Street, Athens, GA 30602, (706) 542–6762.

Mr. Sam Males, State Director, University of Nevada/Reno, College of Business Administration, Room 411, Reno, NV 89557–0100, (775) 784–1717.

Ms. Debbie Bishop Trocha, State Director, Economic Development Council, One North Capitol, Suite 900, Indianapolis, IN 46204, (317) 234–2086.

Mr. Darryl Mleynek, State Director, University of Hawaii/Hilo, 308 Kamehameha Avenue, Suite 201, Hilo, HI 96720, (808) 974–7515.

Mr. Greg Sedrick, State Director, Middle Tennessee State University, 615 Memorial Blvd., Third Floor, Murfreesboro, TN 37219, (615) 849–9999.

Ms. Mary Collins, State Director, University of New Hampshire, 108 McConnell Hall, Durham, NH 03824, (603) 862–4879.

Mr. John Massaua, State Director, University of Southern Maine, 96 Falmouth Street, Portland, ME 04103, (207) 780–4420.

Ms. Christine Martin-Goldsmith, State Director, University of North Dakota, 1600 East Century Avenue, Suite 2, Bismarck, ND 58503, (701) 328–5375.

Mr. John Hemmingstad, State Director, University of South Dakota, 414 East Clark Street, Patterson Hall, Vermillion, SD 57069, (605) 677–6256.

Mr. Brett Rogers, State Director, Washington State University, 534 East Trent Avenue, Spokane, WA 99210–1495, (509) 358–7765.

Mr. Casey Jeszenka, SBDC Director, University of Guam, P.O. Box 5061—U.O.G. Station, Mangilao, GU 96923, (671) 735–2590.

Ms. Erica Kauten, State Director, University of Wisconsin, 432 North Lake Street, Room 423, Madison, WI 53706, (608) 263–7794.

Mr. Greg Higgins, State Director, University of Pennsylvania, The Wharton School, 423 Vance Hall, Philadelphia, PA 19104, (215) 898–1219.

Ms. Vi Pham, Region Director, California State University, Fullerton, 800 North State College Blvd., Fullerton, CA 92834, (714) 278–2719.

Mr. Chris Rosander, Region Director, University of California, Merced, 550 East Shaw, Suite 105A, Fresno, CA 93710, (559) 241–6590.

Ms. Adrianna Dawson, Acting State Director, Bryant College, 1150 Douglas Pike, Smithfield, RI 02917, (401) 232–6923.

Ms. Debbie Trujillo, Region Director, Southwestern Community College District, 900 Otey Lakes Road, Chula Vista, CA 91910, (619) 482–6388.

Mr. Dan Ripke, Region Director, California State University, Chico Research Foundation, Chico, CA 95929–0765, (530) 898–4598.

FOR FURTHER INFORMATION CONTACT: Antonio Doss, Associate Administrator for SBDCs, U.S. Small Business Administration, 409 Third Street, SW., Sixth Floor, Washington, DC 20416.

SUPPLEMENTARY INFORMATION:

Description of the SBDC Program

A partnership exists between SBA and an SBDC. SBDCs offer training, counseling and other business development assistance to small businesses. Each SBDC provides services under a negotiated Cooperative Agreement with the SBA. SBDCs operate on the basis of a state plan to provide assistance within a state or geographic area. The initial plan must have the written approval of the Governor. Non-Federal funds must match Federal funds. An SBDC must operate according to law, the Cooperative Agreement, SBA's regulations, the annual Program Announcement, and program guidance.

Program Objectives

The SBDC program uses Federal funds to leverage the resources of states, academic institutions and the private sector to:

(a) Strengthen the small business community;

(b) Increase economic growth;

(c) Assist more small businesses; and

(d) Broaden the delivery system to more small businesses.

SBDC Program Organization

The lead SBDC operates a statewide or regional network of SBDC service centers. An SBDC must have a full-time Director. SBDCs must use at least 80 percent of the Federal funds to provide services to small businesses. SBDCs use volunteers and other low cost resources as much as possible.

SBDC Services

An SBDC must have a full range of business development and technical assistance services in its area of operations, depending upon local needs, SBA priorities and SBDC program objectives. Services include training and counseling to existing and prospective small business owners in management, marketing, finance, operations, planning, taxes, and any other general or technical area of assistance that supports small business growth.

The SBA district office and the SBDC must agree upon the specific mix of services. They should give particular attention to SBA's priority and special emphasis groups, including veterans, women, exporters, the disabled, and minorities.

SBDC Program Requirements

An SBDC must meet programmatic and financial requirements imposed by statute, regulations or its Cooperative Agreement. The SBDC must:

(a) Locate service centers so that they are as accessible as possible to small businesses;

(b) Open all service centers at least 40 hours per week, or during the normal business hours of its state or academic Host Organization, throughout the year;

(c) Develop working relationships with financial institutions, the investment community, professional associations, private consultants and small business groups; and

(d) Maintain lists of private consultants at each service center.

Dated: August 10, 2005.

Antonio Doss,

Associate Administrator for Small Business Development Centers.

[FR Doc. 05–16233 Filed 8–16–05; 8:45 am]

BILLING CODE 8025–01–P

DEPARTMENT OF TRANSPORTATION

Office of the Secretary

[Docket No. OST–2005–22119]

RIN 2105–AD53

Time Zone Boundaries in the State of Indiana

AGENCY: Office of the Secretary, DOT.

ACTION: Notice.

SUMMARY: The General Assembly and Governor of the State of Indiana have asked the Department of Transportation (DOT) to initiate proceedings to hold hearings in the appropriate locations in Indiana on the issue of the location of the boundary between the Eastern and Central Time Zones in Indiana. The General Assembly and Governor did not, however, take a position on where the boundary should be. This notice

initiates those proceedings and invites local officials in Indiana that wish to change their current time zone in accordance with Indiana Senate Enrolled Act 127 (the Act) to notify DOT of their request for a change. Provided that the submitted petition(s) affirmatively ask for a specific change and provide adequate supporting data, DOT will issue a notice of proposed rulemaking (NPRM), which will solicit public comment, and schedule public hearings on the proposed time zone boundary change.

The notice also announces the opening of an internet-accessible, public docket to receive any petitions and other relevant documents concerning the appropriate placement of the time zone boundary in the State of Indiana.

The Department recognizes the importance of the time zone boundaries to residents of the State of Indiana and will consider the information it receives in a timely manner.

DATES: County or local officials should submit their petitions to the Docket not later than September 16, 2005.

ADDRESSES: You may submit petitions [identified by the docket number in the heading at the beginning of this document] by any of the following methods:

- Web site: *http://dms.dot.gov*. Follow the instructions for submitting petitions on the DOT electronic docket site.
- Fax: 1–202–493–2251.
- Mail: Docket Management Facility; U.S. Department of Transportation, 400 Seventh Street, SW., Nassif Building, Room PL–401, Washington, DC 20590–001.
- Hand Delivery: Room PL–401 on the plaza level of the Nassif Building, 400 Seventh Street, SW., Washington, DC, between 9 am and 5 pm, Monday through Friday, except Federal Holidays.

FOR FURTHER INFORMATION CONTACT: Joanne Petrie, Office of the General Counsel (C–50), 400 Seventh Street, SW., Washington, DC 20590; email *indianatime@dot.gov*.; (202) 366–9306.

SUPPLEMENTARY INFORMATION: The Indiana General Assembly recently adopted legislation providing that the entire State of Indiana will begin to observe daylight saving time beginning in 2006. Under Federal law, the decision whether to observe daylight saving time is solely up to the State and will not be addressed by DOT. Comments on that decision should be directed to State officials and not DOT.

The Act also addressed the issue of changing the location of the boundary between the Eastern and Central Time Zones. In this regard, the Act states that, ''[T]he state supports the county executive of any county that seeks to change the time zone in which the county is located under the procedures established by Federal Law.'' The Act also provides that, ''The governor and the general assembly hereby petition the United States Department of Transportation to initiate proceedings under the Uniform Time Act of 1966 to hold hearings in the appropriate locations in Indiana on the issue of the location of the boundary between the Central Time Zone and the Eastern Time Zone in Indiana.'' Finally, the Act requests that DOT refrain from changing the time zone of any county currently located within the Central Time Zone and five counties near Cincinnati and Louisville.

On July 15, 2005, Secretary Mineta sent a letter to Governor Mitch Daniels responding to this legislation and letters from the Governor. The letter noted that it is our normal practice, in implementing our responsibilities under the Uniform Time Act with respect to the location of time zone boundaries, to take action on a specific request for change in the time zone boundary for a particular jurisdiction from the elected officials of that jurisdiction. After receiving a request, we then determine whether it meets the minimum statutory criteria before issuing a NPRM to make a change.

The letter noted that, because of the special circumstances in Indiana as a result of the recent legislation, and in order to proceed in an orderly manner, DOT would take the following actions:

> ''We will publish in the **Federal Register** a notice that advises the appropriate local officials in Indiana that, if they wish their county to change its current time zone, they should notify DOT of that intent, and provide us with a request containing specific data and information by a date certain.
>
> Our notice will set out the type of data and information necessary to justify issuing an NPRM.
>
> We will set the date for submission of the requests at the time we issue the notice.
>
> After reviewing the requests and supporting data, we will determine which requests, if any, justify the issuance of an NPRM. Once justified, we will issue the NPRM, which will solicit public comment and will schedule public hearings. After the close of the comment period, we will review all comments and take appropriate final action.''

These procedures are designed to provide local officials with a convenient and efficient opportunity to request a change in their county's current time zone. In addition, by learning where there is interest in changing the boundary between the Eastern and Central Time Zones, DOT will be better able to address Indiana's concerns in a more targeted and timely manner. The purpose of this notice is to invite counties that wish to change their time zone boundary in response to the legislation to submit petitions and appropriate supporting documentation to DOT by September 16, 2005.

For decades, DOT has used an informal set of procedures to address time zone issues. Under Federal law, there are two ways in which an area in the United States can be moved from one time zone to another. The first is by a statute enacted by Congress and the second is by a regulation issued by the Secretary of Transportation. For the latter, the request should be made by the ranking elected official or body in the area that is the subject of the request. While a request to change time zones by the Governor or the Legislature meets this requirement, requests from this level are quite rare. Usually, such requests cover one or more counties, or parts of a county; hence, the request should come from the board of county commissioners or similar body.

The request should be accompanied by a formal certification from the appropriate governmental official that the request is the result of official action by the requesting party, if the requesting party is a legislative body. It should include the name and title or position of a person representing the requesting party whom DOT may contact for further information, as well as address, telephone number, fax number, and email address. The request should be submitted to the Secretary of Transportation, Washington, DC 20590, Attention: General Counsel (C–50) by any of the methods set forth under the ''Address'' section earlier in this notice.

Most importantly, the petition should include, or be accompanied by, detailed information supporting the requesting party's contention that the requested change would serve the convenience of commerce. The convenience of commerce standard for deciding whether to change a time zone is defined very broadly to include consideration of all the impacts upon a community of a change in its standard of time. The supporting documentation should address, at a minimum, each of the following questions in as much detail as possible.

1. From where do businesses in the community get their supplies, and to where do they ship their goods or products?
2. From where does the community receive television and radio broadcasts?
3. Where are the newspapers published that serve the community?

4. From where does the community get its bus and passenger rail services; if there is no scheduled bus or passenger rail service in the community, to where must residents go to obtain these services?

5. Where is the nearest airport; if it is a local service airport, to what major airport does it carry passengers?

6. What percentage of residents of the community work outside the community; where do these residents work?

7. What are the major elements of the community's economy; is the community's economy improving or declining; what Federal, State, or local plans, if any, are there for economic development in the community?

8. If residents leave the community for schooling, recreation, health care, or religious worship, what standard of time is observed in the places where they go for these purposes?

In addition, we will consider any other information that the county or local officials believe to be relevant to the proceeding.

In order to proceed efficiently, we ask that any county wishing to change its time zone boundary formally notify DOT by September 16, 2005. The submission should affirmatively take a position concerning what time zone all the county should be placed in and should include specific data supporting that position as outlined in our informal procedures. All petitions received by September 16, 2005, will be considered on an expedited schedule. Counties, or other governmental representatives, are free to petition after that date but may not be included in any rulemaking covering those received by September 16, 2005.

In addition, this notice announces the opening of an internet-accessible, public docket that will include a copy of the legislation, correspondence from the Governor, county petitions, and other relevant documents concerning the appropriate placement of the time zone boundary in the State of Indiana.

Issued in Washington, DC on August 10, 2005.

Jeffrey A. Rosen,

General Counsel.

[FR Doc. 05–16303 Filed 8–16–05; 8:45 am]

BILLING CODE 4910–62–P

DEPARTMENT OF TRANSPORTATION

Federal Aviation Administration

Agency Information Collection Activities Under OMB Review

AGENCY: Federal Aviation Administration (FAA), DOT.

ACTION: Notice.

SUMMARY: In compliance with the Paperwork Reduction Act of 1995 (44 U.S.C. 3501 *et seq.*), this notice announces that the Information Collection Requests (ICR) abstracted below have been forwarded to the Office of Management and Budget (OMB) for extension of the currently approved collections. The ICR describes the nature of the information collection and the expected burden. The Federal Register Notice with a 60-day comment period soliciting comments on the following collections of information was published on May 25, 2005, page 30180.

DATES: Comments must be submitted on or before September 16, 2005. A comment to OMB is most effective if OMB receives it within 30 days of publication.

FOR FURTHER INFORMATION CONTACT: Judy Street on (202) 267–9895.

SUPPLEMENTARY INFORMATION:

Federal Aviation Administration (FAA)

1. *Title:* Airport Master Record.

Type of Request: Extension of a currently approved collection.

OMB Control Number: 2120–0015.

Form(s) FAA Form 5010–1, –2, –3, and –5.

Affected Public: A total of 19,345 airport operators.

Abstract: 49 U.S.C. 329(b) directs the Secretary of Transportation to collect information about civil aeronautics. The information is required to carry out FAA missions related to the aviation industry, flight planning, and airport engineering. The database is the basic source of data for private, state, and Federal government aeronautical charts and publications.

Estimated Annual Burden Hours: An estimated 8,770 hours annually.

2. *Title:* General Aviation and Air Taxi Activity and Avionics Survey.

Type of Request: Extension of a currently approved collection.

OMB Control Number: 2120–0060.

Forms: FAA Form 1800–54.

Affected Public: A total of 30,000 aircraft owners.

Abstract: Respondents to this survey are owners of general aviation aircraft. This information is used by the FAA, the National Transportation Safety Board (NTSB) and other government agencies, the aviation industry and others for safety assessment, planning, forecasting, cost/benefit analysis, and to target areas for research.

Estimated Annual Burden Hours: An estimated 10,000 hours annually.

ADDRESS: Send comments to the Office of Information and Regulatory Affairs, Office of Management and Budget, 725 17th Street, NW., Washington, DC 20503, Attention FAA Desk Officer.

Comments are invited on: Whether the proposed collection of information is necessary for the proper performance of the functions of the Department, including whether the information will have practical utility; the accuracy of the Department's estimates of the burden of the proposed information collection; ways to enhance the quality, utility and clarity of the information to be collected; and ways to minimize the burden of the collection of information on respondents, including the use of automated collection techniques or other forms of information technology.

Issued in Washington, DC, on August 11, 2005.

Judith D. Street,

FAA Information Collection Clearance Officer, Information Systems and Technology Services Staff, ABA–20.

[FR Doc. 05–16328 Filed 8–9–05; 8:45 am]

BILLING CODE 4910–13–M

DEPARTMENT OF TRANSPORTATION

Federal Aviation Administration

Approval of Noise Compatibility Program; Capital City Airport, Lansing, MI

AGENCY: Federal Aviation Administration, DOT.

ACTION: Notice.

SUMMARY: The Federal Aviation Administration (FAA) announces its findings on the noise compatibility program submitted by Capital Region Airport Authority under the provisions of 49 U.S.C. (the Aviation Safety and Noise Abatement Act, hereinafter referred to as ''the Act'') and 14 CFR part 150. These findings are made in recognition of the description of Federal and nonfederal responsibilities in Senate Report No. 96–52 (1980). On February 7, 2005 the FAA determined that the noise exposure maps submitted by Capital Region Airport Authority under part 150 were in compliance with applicable requirements. On August 5, 2005, the FAA approved the Capital City Airport noise compatibility program. All of the recommendations of the program were approved. No program

elements relating to new or revised flight procedures for noise abatement were proposed by the airport operator.

DATES: The effective date of the FAA's approval of the Capital City Airport noise compatibility program is August 5, 2005.

FOR FURTHER INFORMATION CONTACT: Ms. Katherine S. Jones, Community Planner, Detroit Airports District Office, Metro Airport Center, 11677 South Wayne Road, Suite 107, Romulus, Michigan, Phone (734) 229–2900. Documents reflecting this FAA action may be reviewed at this same location.

SUPPLEMENTARY INFORMATION: This notice announces that the FAA has given its overall approval to the noise compatibility program for Capital City Airport, effective August 5, 2005.

Under section 47504 of the Act, an airport operator who has previously submitted a noise exposure map may submit to the FAA a noise compatibility program which sets forth the measures taken or proposed by the airport operator for the reduction of existing non-compatible land uses and prevention of additional non-compatible land uses within the area covered by the noise exposure maps. The Act requires such programs to be developed in consultation with interested and affected parties including local communities, government agencies, airport users, and FAA personnel.

Each airport noise compatibility program developed in accordance with Federal Aviation Regulations (FAR) part 150 is a local program, not a Federal program. The FAA does not substitute its judgment for that of the airport proprietor with respect to which measures should be recommended for action. The FAA's approval or disapproval of FAR part 150 program recommendations is measured according to the standards expressed in part 150 and the Act and is limited to the following determinations:

a. The noise compatibility program was developed in accordance with the provisions and procedures of FAR part 150;

b. Program measures are reasonably consistent with achieving the goals of reducing existing non-compatible land uses around the airport and preventing the introduction of additional non-compatible land uses;

c. Program measures would not create an undue burden on interstate or foreign commerce, unjustly discriminate against types or classes of aeronautical uses, violate the terms of airport grant agreements, or intrude into areas preempted by the Federal Government; and

d. Program measures relating to the use of flight procedures can be implemented within the period covered by the program without derogating safety, adversely affecting the efficient use and management of the navigable airspace and air traffic control systems, or adversely affecting other powers and responsibilities of the Administrator prescribed by law.

Specific limitations with respect to FAA's approval of an airport noise compatibility program are delineated in FAR part 150, seciton 150.5. Approval is not a determination concerning the acceptability of land uses under Federal, State, or local law. Approval does not by itself constitute an FAA implementing action. A request for Federal action or approval to implement specific noise compatibility measures may be required, and an FAA decision on the request may require an environmental assessment of the proposed action. Approval does not constitute a commitment by the FAA to financially assist in the implementation of the program nor a determination that all measures covered by the program are eligible for grant-in-aid funding from the FAA. Where federal funding is sought, requests for project grants must be submitted to the FAA Airports District Office in Romulus, Michigan.

Capital Region Airport Authority submitted to the FAA on February 1, 2005, the noise exposure maps, descriptions, and other documentation produced during the noise compatibility planning study conducted from 2004 through 2005. The Capital City Airport noise exposure maps were determined by FAA to be in compliance with applicable requirements on February 7, 2005. Notice of this determination was published in the **Federal Register** on March 18, 2005 (FR Doc. 05–5341 Filed 3–17–05; 8:45 am).

The Capital City Airport study contains a proposed noise compatibility program comprised of actions designed for phased implementation by airport management and adjacent jurisdictions from 2005 to 2008. It was requested that the FAA evaluate and approve this material as a noise compatibility program as described in section 47504 of the Act. The FAA began its review of the program on February 7, 2005 and was required by a provision of the Act to approve or disapprove the program within 180 days (other that the use of new or modified flight procedures for noise control). Failure to approve or disapprove such program within the 180-day period shall be deemed to be an approval of such program.

The submitted program contained six (6) proposed actions for noise mitigation on and/or off the airport. The FAA completed its review and determined that the procedural and substantive requirements of the Act and FAR part 150 have been satisfied. The overall program, therefore, was approved by the FAA effective August 5, 2005.

Outright approval was granted for all of the specific program elements. These elements were: Encourage real estate sellers to provide notification of potential noise impacts; Encourage local jurisdictions to require new development to provide proper sound insulation in noise-impacted areas through the building code process; encourage local jurisdictions to enact/continue an environmental review process that allows for Airport review of new development to ensure consideration of noise issues/impacts; encourage local jurisdictions to develop policies related to noise impacts in Comprehensive Plans to encourage compatible development in noise-impacted areas; present noise exposure contours at various public outreach efforts to continue public awareness of community noise exposure; and update noise exposure maps in five years or with a significant change in aircraft activity, fleet mix, or physical layout.

These determinations are set forth in detail in a Record of Approval signed by the Associate Administrator of Airports on August 5, 2005. The Record of Approval, as well as other evaluation materials and the documents comprising the submittal, are available for review at the FAA office listed above and at the administrative offices of the Capital Region Airport Authority, Capital City Airport, 4100 Capital City Boulevard, Lansing, Michigan 48906. The Record of Approval also will be available on-line at *http://www.faa.gov/arp/environmental/14cfr150/index14.cfm.*

Issued in Romulus, Michigan, August 9, 2005.

Winsome A. Lenfert,

Acting Manager, Detroit Airports District Office.

[FR Doc. 05–16329 Filed 8–16–05; 8:45 am]

BILLING CODE 4910–13–M

DEPARTMENT OF TRANSPORTATION

Federal Aviation Administration

Receipt of Noise Compatibility Program and Request for Review

AGENCY: Federal Aviation Administration, DOT.

ACTION: Notice.

SUMMARY: The Federal Aviation Administration (FAA) announces that it is reviewing a proposed noise compatibility program that was submitted for Santa Barbara Airport under the provisions of 49 U.S.C. 47501 *et seq.* (the Aviation Safety and Noise Abatement Act, hereinafter referred to as ''the Act'') and 14 CFR part 150 by City of Santa Barbara. This program was submitted subsequent to a determination by FAA that associated noise exposure maps submitted under 14 CFR part 150 for Santa Barbara Airport were in compliance with applicable requirements, effective June 28, 2005, (FR Vol. 69 pages 40452–40453 published on July 2, 2004). The proposed noise compatibility program will be approved or disapproved on or before January 29, 2006.

DATES: The effective date of the start of FAA's review of the noise compatibility program is August 3, 2005. The public comment period ends October 3, 2005.

FOR FURTHER INFORMATION CONTACT: Jennifer Mendelsohn, Environmental Protection Specialist, AWP–621.6, Southern California Standards Section, Federal Aviation Administration, Western-Pacific Region, P.O. Box 92007, Los Angeles, California 90009–2007, Telephone: 310/725–3637. Comments on the proposed noise compatibility program should also be submitted to the above office.

SUPPLEMENTARY INFORMATION: This notice announces that the FAA is reviewing a proposed noise compatibility program for Santa Barbara Airport, which will be approved or disapproved on or before January 29, 2006. This notice also announces the availability of this program for public review and comment.

An airport operator who has submitted noise exposure maps that are found by FAA to be in compliance with the requirements of Federal Aviation Regulations (FAR) part 150, promulgated pursuant to the Act, may submit a noise compatibility program for FAA approval which sets forth the measures the operator has taken or proposes to reduce existing non-compatible uses and prevent the introduction of additional non-compatible uses.

The FAA has formally received the noise compatibility program for Santa Barbara Airport, effective on August 3, 2005. The airport operator has requested that the FAA review this material and that the noise mitigation measures, to be implemented jointly by the airport and surrounding communities, be approved as a noise compatibility program under section 47504 of the Act. Preliminary review of the submitted material indicates that it conforms to FAR part 150 requirements for the submittal of noise compatibility programs, but that further review will be necessary prior to approval or disapproval of the program. The formal review period, limited by law to a maximum of 180 days, will be completed on or before January 29, 2006.

The FAA's detailed evaluation will be conducted under the provisions of 14 CFR part 150, section 150.33. The primary considerations in the evaluation process are whether the proposed measures may reduce the level of aviation safety or create an undue burden on interstate or foreign commerce, and whether they are reasonably consistent with obtaining the goal of reducing existing non-compatible land uses and preventing the introduction of additional non-compatible land uses.

Interested persons are invited to comment on the proposed program with specific reference to these factors. All comments relating to these factors, other than those properly addressed to local land use authorities, will be considered by the FAA to the extent practicable. Copies of the noise exposure maps and the proposed noise compatibility program are available for examination at the following locations:

Federal Aviation Administration, Community and Environmental Needs Division, APP–600, 800 Independence Avenue, SW., Washington, DC 20591.

Federal Aviation Administration, Western-Pacific Region, Airports Division, Room 3012, 15000 Aviation Boulevard, Hawthorne, CA 90261.

Karen Ramsdell, Airport Director, Santa Barbara Airport, 601 Firestone Road, Goleta, CA 93117.

Questions may be directed to the individuals named above under the heading, **FOR FURTHER INFORMATION CONTACT.**

Issued in Hawthorne, California on August 3, 2005.

Mark A. McClardy,

Manager, Airports Division, AWP–600 Western-Pacific Region.

[FR Doc. 05–16327 Filed 8–16–05; 8:45 am]

BILLING CODE 4910–13–M

DEPARTMENT OF TRANSPORTATION

Federal Aviation Administration

[Summary Notice No. PE–2005–48]

Petitions for Exemption; Summary of Petitions Received

AGENCY: Federal Aviation Administration (FAA), DOT.

ACTION: Notice of petitions for exemption received.

SUMMARY: Pursuant to FAA's rulemaking provisions governing the application, processing, and disposition of petitions for exemption part 11 of Title 14, Code of Federal Regulations (14 CFR), this notice contains a summary of certain petitions seeking relief from specified requirements of 14 CFR. The purpose of this notice is to improve the public's awareness of, and participation in, this aspect of FAA's regulatory activities. Neither publication of this notice nor the inclusion or omission of information in the summary is intended to affect the legal status of any petition or its final disposition.

DATES: Comments on petitions received must identify the petition docket number involved and must be received on or before September 6, 2005.

ADDRESSES: You may submit comments [identified by DOT DMS Docket Number FAA–2005–21606] by any of the following methods:

- Web Site: *http://dms.dot.gov*. Follow the instructions for submitting comments on the DOT electronic docket site.
- Fax: 1–202–493–2251.
- Mail: Docket Management Facility; U.S. Department of Transportation, 400 Seventh Street, SW., Nassif Building, Room PL–401, Washington, DC 20590–001.
- Hand Delivery: Room PL–401 on the plaza level of the Nassif Building, 400 Seventh Street, SW., Washington, DC, between 9 am and 5 pm, Monday through Friday, except Federal holidays.

Docket: For access to the docket to read background documents or comments received, go to *http://dms.dot.gov* at any time or to Room PL–401 on the plaza level of the Nassif Building, 400 Seventh Street, SW., Washington, DC, between 9 am and 5 pm, Monday through Friday, except Federal holidays.

FOR FURTHER INFORMATION CONTACT: Kenna Sinclair (425–227–1556), Transport Airplane Directorate (ANM–113), Federal Aviation Administration, 1601 Lind Ave SW., Renton, WA 98055–4056; or John Linsenmeyer (202–267–5174), Office of Rulemaking (ARM–1), Federal Aviation Administration, 800 Independence Avenue, SW., Washington, DC 20591.

Issued in Washington, DC, on August 9, 2005.

Anthony F. Fazio,

Director, Office of Rulemaking.

Petitions for Exemption

Docket No.: FAA–2005–21606.

Petitioner: Kitty Hawk Aircargo, Inc.

Section of 14 CFR Affected: 14 CFR 25.807(g)(1), 25.810(a)(1), 25.813(b)(3), and 25.857(e)

Description of Relief Sought: Carriage of two supernumeraries on the flightdeck of Boeing Model 727–200 airplanes in a cargo configuration with a Class E cargo compartment, and relief from certain requirements for emergency exits.

[FR Doc. 05–16230 Filed 8–16–05; 8:45 am]

BILLING CODE 4910–13–P

DEPARTMENT OF TRANSPORTATION

Federal Aviation Administration

[Summary Notice No. PE–2005–45]

Petitions for Exemption; Dispositions of Petitions Issued

AGENCY: Federal Aviation Administration (FAA), DOT.

ACTION: Notice of disposition of prior petition.

SUMMARY: Pursuant to FAA's rulemaking provisions governing the application, processing, and disposition of petitions for exemption, part 11 of Title 14, Code of Federal Regulations (14 CFR), this notice contains the disposition of certain petitions previously received. The purpose of this notice is to improve the public's awareness of, and participation in, this aspect of FAA's regulatory activities. Neither publication of this notice nor the inclusion or omission of information in the summary is intended to affect the legal status of any petition or its final disposition.

FOR FURTHER INFORMATION CONTACT: Kenna Sinclair (425–227–1556), Transport Airplane Directorate (ANM–113), Federal Aviation Administration, 1601 Lind Ave SW., Renton, WA 98055–4056; or John Linsenmeyer (202–267–5174), Office of Rulemaking (ARM–1), Federal Aviation Administration, 800 Independence Avenue, SW., Washington, DC 20591.

Issued in Washington, DC, on August 9, 2005.

Anthony F. Fazio,

Director, Office of Rulemaking.

Disposition of Petitions

Docket No.: FAA–2005–21288.

Petitioner: Israel Aircraft Industries, Ltd.

Sections of 14 CFR Affected: 14 CFR 25.785(j), 25.857(e), and 25.1447(c)(1).

Description of Relief Sought/Disposition: Carriage of eight supernumeraries on the upper deck of Boeing Model 747–400 Special Freighter (SF) airplanes, use of portable oxygen bottles in lieu of self-presenting oxygen masks, and relief from hand hold requirements.

Partial Grant of Exemption, 07/19/2005, Exemption No. 8587

Docket No.: FAA–2004–18657.

Petitioner: The Boeing Company.

Sections of 14 CFR Affected: 14 CFR 25.807(c) and 25.857(e).

Description of Relief Sought/Disposition: Carriage of 20 supernumeraries on the upper deck of Boeing Model 747–400 Special Freighter (SF) airplanes while maintaining a Class E cargo compartment on the main deck.

Grant of Exemption, 07/27/2005, Exemption No. 8590

[FR Doc. 05–16231 Filed 8–16–05; 8:45 am]

BILLING CODE 4910–13–P

DEPARTMENT OF TRANSPORTATION

Surface Transportation Board

[STB Finance Docket No. 34740]

The Kansas City Southern Railway Company—Temporary Trackage Rights Exemption—Union Pacific Railroad Company

Union Pacific Railroad Company (UP) has agreed to grant non-exclusive, overhead, temporary trackage rights to The Kansas City Southern Railway Company (KCS), over a portion of UP's rail line between UP milepost 230.8 (UP's Lufkin Subdivision), in Shreveport, LA, and UP milepost 217.4, at TRE Junction (UP's Dallas Subdivision), in Dallas, TX, a distance of approximately 192 miles.

The transaction was scheduled to be consummated on August 4, 2005, and the temporary trackage rights will expire on or about November 1, 2005. The purpose of the temporary trackage rights is to bridge KCS's trains while KCS's main lines are out of service due to programmed track, roadbed and structural maintenance.

As a condition to this exemption, any employees affected by the acquisition of the temporary trackage rights will be protected by the conditions imposed in *Norfolk and Western Ry. Co.—Trackage Rights—BN*, 354 I.C.C. 605 (1978), as modified in *Mendocino Coast Ry., Inc.—Lease and Operate*, 360 I.C.C. 653 (1980), and any employees affected by the discontinuance of those trackage rights will be protected by the conditions set out in *Oregon Short Line R. Co.—Abandonment—Goshen*, 360 I.C.C. 91 (1979).

This notice is filed under 49 CFR 1180.2(d)(8). If it contains false or misleading information, the exemption is void *ab initio.* Petitions to revoke the exemption under 49 U.S.C. 10502(d) may be filed at any time. The filing of a petition to revoke will not automatically stay the transaction.

An original and 10 copies of all pleadings, referring to STB Finance Docket No. 34740, must be filed with the Surface Transportation Board, 1925 K Street, NW., Washington, DC 20423–0001. In addition, a copy of each pleading must be served on William A. Mullins, Baker and Miller, PLLC, 2401 Pennsylvania Avenue, NW., Suite 300, Washington, DC 20037.

Board decisions and notices are available on our Web site at *http://www.stb.dot.gov.*

Decided: August 10, 2005.

By the Board, David M. Konschnik, Director, Office of Proceedings.

Vernon A. Williams,

Secretary.

[FR Doc. 05–16283 Filed 8–16–05; 8:45 am]

BILLING CODE 4915–01–P

DEPARTMENT OF VETERANS AFFAIRS

[OMB Control No. 2900–0086]

Agency Information Collection Activities Under OMB Review

AGENCY: Veterans Benefits Administration, Department of Veterans Affairs.

ACTION: Notice.

SUMMARY: In compliance with the Paperwork Reduction Act (PRA) of 1995 (44 U.S.C. 3501–3521), this notice announces that the Veterans Benefits Administration (VBA), Department of Veterans Affairs, has submitted the collection of information abstracted below to the Office of Management and Budget (OMB) for review and comment. The PRA submission describes the nature of the information collection and its expected cost and burden; it includes the actual data collection instrument.

DATES: Comments must be submitted on or before September 16, 2005.

FOR FURTHER INFORMATION OR A COPY OF THE SUBMISSION CONTACT: Denise McLamb, Records Management Service (005E3), Department of Veterans Affairs, 810 Vermont Avenue, NW., Washington, DC 20420, (202) 273–8030 or , FAX (202) 273–5981 or e-mail: *denise.mclamb@mail.va.gov.* Please refer to ''OMB Control No. 2900–0086.''

Send comments and recommendations concerning any aspect of the information collection to

VA's Desk Officer, OMB Human Resources and Housing Branch, New Executive Office Building, Room 10235, Washington, DC 20503 (202) 395–7316. Please refer to ''OMB Control No. 2900–0086'' in any correspondence.

SUPPLEMENTARY INFORMATION:

Title: Request for a Certificate of Eligibility for VA Home Loan Benefits, VA Form 26–1880.

OMB Control Number: 2900–0086.

Type of Review: Extension of a currently approved collection.

Abstract: The data collected on VA Form 26–1880 is used to determine a claimant's eligibility for home loan guaranty benefits. Claimants also use VA Form 26–1880 to request restoration of entitlement previously used, or a duplicate Certificate of Eligibility due to the original being lost or stolen.

An agency may not conduct or sponsor, and a person is not required to respond to a collection of information unless it displays a currently valid OMB control number. The **Federal Register** Notice with a 60-day comment period soliciting comments on this collection of information was published on February 15, 2005 at page 7795.

Affected Public: Individuals or households.

Estimated Annual Burden: 110,625 hours.

Estimated Average Burden Per Respondent: 15 minutes.

Frequency of Response: On occasion.

Estimated Number of Respondents: 442,500.

Dated: August 9, 2005.

By direction of the Secretary.

Denise McLamb,

Program Analyst, Records Management Service.

[FR Doc. 05–16235 Filed 8–16–05; 8:45 am]

BILLING CODE 8320–01–P

DEPARTMENT OF VETERANS AFFAIRS

[OMB Control No. 2900–0576]

Agency Information Collection Activities Under OMB Review

AGENCY: Veterans Benefits Administration, Department of Veterans Affairs.

ACTION: Notice.

SUMMARY: In compliance with the Paperwork Reduction Act (PRA) of 1995 (44 U.S.C. 3501–3521), this notice announces that the Veterans Benefits Administration (VBA), Department of Veterans Affairs, has submitted the collection of information abstracted below to the Office of Management and Budget (OMB) for review and comment. The PRA submission describes the nature of the information collection and its expected cost and burden; it includes the actual data collection instrument.

DATES: Comments must be submitted on or before September 16, 2005.

FOR FURTHER INFORMATION CONTACT: Denise McLamb, Records Management Service (005E3), Department of Veterans Affairs, 810 Vermont Avenue, NW., Washington, DC 20420, (202) 273–8030, FAX (202) 273–5981 or e-mail: *denise.mclamb@mail.va.gov.* Please refer to ''OMB Control No. 2900–2900–0576.''

Send comments and recommendations concerning any aspect of the information collection to VA's OMB Desk Officer, OMB Human Resources and Housing Branch, New Executive Office Building, Room 10235, Washington, DC 20503 (202) 395–7316. Please refer to ''OMB Control No. 2900–0576'' in any correspondence.

Title: Certificate of Affirmation of Enrollment Agreement—Correspondence Course (Under Chapters 20, 32, & 35, Title 38 U.S.C., Section 903 of PL 96–342, or Chapter 1606, Title 10, U.S.C.), VA Form 22–1999c.

OMB Control Number: 2900–0576.

Type of Review: Extension of a currently approved collection.

Abstract: Claimants enrolled in a correspondence training course complete VA Form 22–1999c and submit the form to the correspondence school to affirm the enrollment agreement contract. The certifying official at the correspondence school submit the form and the enrollment certification to VA for processing. VA uses the information to determine if the claimant signed and dated the form during the ten-day reflection period deciding whether to enroll in the correspondence course and if such course is suitable to his or her abilities and interest. In addition, the claimant must sign VA Form 22–1999c on or after the twelfth day the enrollment agreement was dated. VA will not pay educational benefits for correspondence training that was completed nor accept the affirmation agreement that was signed and dated on or before the enrollment agreement date.

An agency may not conduct or sponsor, and a person is not required to respond to a collection of information unless it displays a currently valid OMB control number. The **Federal Register** Notice with a 60-day comment period soliciting comments on this collection of information was published on April 4, 2005 at pages 17145–17146.

Affected Public: Individuals or households.

Estimated Annual Burden: 135 hours.

Estimated Average Burden Per Respondent: 3 minutes.

Frequency of Response: On occasion.

Estimated Number of Respondents: 2,700.

Dated: August 9, 2005.

By direction of the Secretary.

Denise McLamb,

Program Analyst, Records Management Service.

[FR Doc. 05–16236 Filed 8–16–05; 8:45 am]

BILLING CODE 8320–01–U

Federal Register

Wednesday,
August 17, 2005

Part II

Department of Commerce

National Oceanic and Atmospheric Administration

Financial Assistance To Establish a New Cooperative Science Center Under NOAA's Educational Partnership Program (EPP) With Minority Serving Institutions for Scientific Environmental Technology; Notice

DEPARTMENT OF COMMERCE

National Oceanic and Atmospheric Administration

[Docket No. 030602141–5196–21]

Financial Assistance To Establish a New Cooperative Science Center Under NOAA's Educational Partnership Program (EPP) With Minority Serving Institutions for Scientific Environmental Technology

AGENCY: Office of Oceanic and Atmospheric Research (OAR), National Oceanic and Atmospheric Administration (NOAA), Department of Commerce.

ACTION: Notice of criteria for establishing a new Cooperative Science Center in Scientific Environmental Technology at a Minority Serving Institution; and, notice of availability of funds and solicitation for proposals for these funds.

SUMMARY: The purpose of this document is to advise the public that NOAA's Educational Partnership Program is soliciting proposals to establish a new Cooperative Science Center at an accredited postsecondary minority serving institution (MSI). This Center will be established as a partnership between the institution and NOAA, with the goal of expanding the institution's training and research capabilities and supporting the development of programs compatible with NOAA's mission. The Cooperative Science Center will be established in support of NOAA core science areas and will enhance NOAA's ability to conduct its mission with enhanced scientific environmental technologies. The Center will support activities that strengthen the research capabilities at the selected MSI with accredited programs and graduate degrees in physical sciences, including applied physics, applied mathematics, computer science applications, and atmospheric, oceanic and environmental related sciences. The Center's principal academic institution must be an accredited MSI with a Ph.D. program in one of the key sciences identified in this announcement. Proposals will not be accepted from non-profit organizations, foundations, auxiliary services or any other entity submitted on behalf of MSIs.

DATES: Applications must be received by NOAA Educational Partnership Program (EPP) no later than 2 p.m., local time 60 days after the publication of this notice.

ADDRESSES: Applications submitted in response to this announcement are strongly encouraged to be submitted through the Grants.gov Web site. Electronic access to the full funding announcement for this program is available via the Grants.gov Web site: *http://www.grants.gov.* The announcement will also be available at the NOAA Web site *http://www.ofa.noaa.gov/%7Eamd/SOLINDEX.HTML* or by contacting the program official identified below. Paper applications (a signed original and two copies) should be submitted to the Educational Partnership Program at the following address: NOAA/OAR/EPP, 1315 East West Highway, Room 10600, Silver Spring, Maryland 20910. No facsimile applications will be accepted. Institutions are encouraged to submit Letters of Intent to NOAA/EPP within 30 days of this announcement to aid in planning the review processes. Letters of Intent may be submitted via e-mail to *Jacqueline.J.Rousseau@noaa.gov.* Information should include a general description of the Center proposal and participating institutions.

FOR FURTHER INFORMATION CONTACT: Jacqueline Rousseau, Program Director at (301) 713–9437 ext. 124 or *Jacqueline.J.Rousseau@noaa.gov.*

SUPPLEMENTARY INFORMATION:

Summary Description: NOAA is commitment to the recruitment and retention of employees from underrepresented communities, trained in NOAA-related sciences, to conduct the ongoing mission of the agency. Toward that end, the agency established a program aimed at partnering with Minority Serving Institutions (MSIs) that train and graduate students in the physical sciences and in particular in the areas of atmospheric, oceanic and environmental sciences, and remote sensing. Since approximately 40% of minority students receive their undergraduate degrees at MSIs, direct collaboration with MSIs is, therefore, an effective way to increase the number of minority students trained and graduating with degrees in NOAA-related fields who may become engaged in research and pursue careers compatible with the agency's mission. Statistics from the National Science Foundation (NSF) Science and Engineering Indicators 2004 Report illustrate that the number of minority students receiving doctoral and master's degrees in science and engineering for selected years from 1994–2003, continues to be lower than the national average. The NSF report states, for example, that in 2004 (the most recent data available) 26,413 doctoral degrees were granted in science and engineering (which includes earth, atmospheric, and ocean sciences) to U.S. citizens. Of these graduates, 1708 were African American, 1270 were Hispanic, 133 were American Indian/Alaska Native and 1417 were Asian/Pacific Islander. The 2004 NSF report states that a total of 474 Ph.D. degrees were granted in earth, atmospheric, and ocean sciences. Of those earth, atmospheric, and ocean sciences graduates, 15 were granted to African Americans, 13 to Hispanics, 2 to American Indians and Alaskan Natives, and 10 to Asian/Pacific Islanders. Statistics for master's degrees granted to these four groups are also disproportionately low. With such a limited pool of potential minority employees trained in NOAA-related sciences, it is important that NOAA seek new ways to make students aware of the mission of the agency and to support activities that increase opportunities for students trained in NOAA-related sciences.

The Center will support activities that strengthen the research capability at the selected MSI with accredited programs and degrees in physical sciences, including applied physics, applied mathematics, computer science applications, engineering atmospheric, oceanic, and environmental and related sciences. An essential goal of this program is to seek ways to improve opportunities for, and retention of, students and faculty from underrepresented groups in NOAA-related sciences, at MSIs, with the eventual goal of increasing the number of students graduating with degrees that will enhance the technologies supportive of, and compatible with, atmospheric, oceanic, and environmental sciences, remote sensing and related technologies. The overall Educational Partnership Program (EPP) program strategies include: enhanced collaborative research, hands-on opportunities and research experiences for students and faculty with NOAA research facilities; strengthening the infrastructure at minority serving institutions that serve underrepresented groups; and, supporting staff exchanges between NOAA and MSIs. A Distinguished Scientist position must be created at the Center to develop significant research projects for the Center with other EPP Centers, with other MSIs, other NOAA science and research facilities and relevant agencies. Staff and faculty exchanges will be an integral part of this program and opportunities will be made available to participate in collaborative research or other agreed upon activities. NOAA expects the Center to develop mechanisms and approaches to increase

opportunities to make courses and seminars offered at the Center available to students at other MSIs and partner institutions. The Center will also be required to use a minimum of thirty percent (30%) of the award for student support, which includes, but is not limited to, scholarships, fellowships, travel expenses to professional meetings, and for conducting site research. While the Center will be established at an MSI, consortia with non-minority serving institutions partners will not be restricted. Private sector partnerships are also encouraged.

Proposals for the Scientific Environmental Technology (SET) Cooperative Science Center should address the ability to support education and research in physical and social sciences at an MSI. The physical sciences include but are not limited to, meteorological and oceanographic sensor and satellite telecommunications technologies, remote sensing, and observational and information technology systems, applied mathematics, applied physics and computer applications and engineering. For the purposes of this program Scientific Environmental Technology includes an emphasis on the following: meteorological sensors (wind, visibility, humidity, etc.), oceanographic sensors (wave, water quality, microwave altimeters, beacons, navigational, etc.), airborne and ship based observing systems, chemical observations, observational and information technology systems (satellite telecommunications, telecommunications, data collection packages, modems, drivers, protocols, etc.). Scientific Environmental Technology also includes the analysis of global observing systems, including simulations to determine the role of each observing subsystem, determination of optimal mixes of observing systems, and the costs associated with various observing systems.

Graduates must be able to carry out a variety of tasks including: Understanding meteorological and oceanographic needs; identifying potential sensor, observational, and information technologies; developing sensor; observational, and information technology systems; testing and evaluating meteorological and/or oceanographic systems. NOAA anticipates that as the EPP program becomes more established and more minority students graduate in NOAA-related sciences, the agency will have a larger pool of candidates from which to hire. An increase in the number of students trained and graduating in science and engineering will be beneficial to the nation as a whole, because NOAA relies on its partnerships with state, local and tribal governments, as well as with community interest groups, to accomplish its mission.

Electronic Access

Applicants can access download and submit electronic grant applications, including the full funding announcement, for NOAA programs at the Grants.gov Web site: *http://www.grants.gov.* The announcement will also be available at the NOAA Web site *http://www.ofa.noaa.gov/%7Eamd/SOLINDEX.HTML* or by contacting the program official identified above. The closing date will be the same as for the paper submissions noted in this announcement. NOAA strongly recommends that applicants not wait until the application deadline date to begin the application process through Grants.gov.

If Internet access is unavailable, hard copies of proposals will also be accepted—a signed original and two copies at time of submission. This includes color or high-resolution graphics, unusually sized materials, or otherwise unusual materials submitted as part of the proposal. For color graphics, submit either color originals or color copies. Facsimile transmissions and electronic mail submission of full proposals will not be accepted.

Funding Availability: This solicitation announces that funding up to $2 million will be available in FY 2006, with a maximum of $12.5 million over a five (5) year period, subject to appropriations. Applications in excess of $2 million in the first year will not be considered. It is anticipated that the funding instrument will be a cooperative agreement since NOAA will be substantially involved in developing research priorities, conducting cooperative activities with recipients, exchanging staff and providing internship opportunities for students at MSIs. Only one award will be made to establish a Scientific Environmental Cooperative Science Center.

Authorities: 15 U.S.C. 1540, 49 U.S.C. 44720, 33 U.S.C. 883d, 33 U.S.C. 1442, 16 U.S.C. 1854(e), 16 U.S.C. 661, 16 U.S.C. 753(a), 16 U.S.C. 1451 *et seq.*, 16 U.S.C. 1431, 33 U.S.C. 883a and Executive Orders 12876, 12900, 13021, 13336, and 13339.

Catalog of Federal Domestic Assistance: 11.481—Educational Partnership Program with Minority Serving Institutions.

Eligibility: For the purposes of this program, Historically Black Colleges and Universities, Hispanic Serving Institutions, Tribal Colleges and Universities, and Alaska Native & Native Hawaiian Serving Institutions, as identified on the 2004 United States Department of Education, Accredited Postsecondary Minority Institution list at *http://www.ed.gov/about/offices/list/ocr/minorityinst2004.pdf,* are eligible to apply. Proposals will not be accepted from non-profit organizations, foundations, auxiliary services or any other entity submitted on behalf of MSIs.

Cost Sharing Requirements: None.

Intergovernmental Review: Applications under this program are not subject to Executive Order 12372, ''Intergovernmental Review of Federal Programs.''

Evaluation and Selection Procedures

Once an application is received by NOAA, an initial administrative review is conducted to determine compliance with requirements and completeness of the application. All applications that meet the requirements and are complete will be evaluated and scored individually in accordance with the assigned weights of the evaluation criteria by an independent peer review panel. Both Federal and non-Federal experts in the field may be used in the process. Each peer panel reviewer will score proposals on a scale of five to one, where scores represent respectively: Excellent (5), Very Good (4), Good (3), Fair (2), Poor (1). The peer review panel will be comprised of 5 to 7 individuals, with each individual having expertise in a separate area, so that the panel, as a whole, covers a range of scientific expertise.

The individual peer panelist scores shall be averaged for each application and presented to the Program Officer. No consensus advice will be given by the independent peer the review panel.

The Program Officer will neither vote nor score proposals as part of the independent peer panel nor participate in discussion of the merits of the proposal. Those proposals receiving an average panel score of ''Good'', ''Fair'', or ''Poor'' will not be given further consideration, and applicants will be notified of non-selection. For the proposals receiving an average score of either ''Excellent'' or ''Very Good, the Program Officer will (a) rank the proposals by average panel ratings, and/or by applying the project selection factors listed below; (b) determine the total duration of funding for the selected proposal; and (c) determine the amount of funds available for the selected proposal subject to the availability of fiscal year funds. A recommendation for funding is then forwarded to the selecting official, the Deputy Assistant

Administrator (DAA) of OAR, for the final funding decision. In making the final selection, the DAA will award in rank order unless the selected proposal is justified to be selected out of rank order based on the selection factors listed below.

Investigators may be asked to modify objectives, work plans or budgets, and provide supplemental information required by the agency prior to the award. When a decision has been made (whether an award or declination), verbatim anonymous copies of reviews and summaries of review panel deliberations, if any, will be made available to the applicant upon applicant request. Declined applications will be held in the NOAA EPP for the required 3 years in accordance with the current retention requirements, and then destroyed.

Evaluation Criteria: Proposals will be evaluated on the basis of the following evaluation criteria at the indicated weights:

(1) Importance and/or relevance and applicability of proposed project to the program goals. This ascertains whether there is intrinsic value in the proposed work and/or relevance to NOAA, Federal, regional, state, or local activities *(25 percent).*

(2) Technical/scientific merit: This assesses whether the approach is technically sound and/or innovative, if the methods are appropriate, and whether there are clear project goals and objectives *(25 percent).*

(3) Overall qualifications of applicants: This ascertains whether the applicant possesses the necessary education, experience, training, facilities, and administrative resources to accomplish the project, including a PhD program in the core science area (10 percent):

(4) Project costs: The Budget is evaluated to determine if it is realistic and commensurate with the project needs and time-frame *(10 percent)*:

(5) Outreach and education: NOAA assesses whether this project provides a focused and effective education and outreach strategy regarding NOAA's mission to protect the Nation's natural resources. *(30 percent)*:

Selection Factors: The merit review ratings shall provide a rank order to the Selecting Official for final funding recommendation. A program officer may first make a recommendation to the Selecting Official applying the selection factors below. The Selecting Official shall award in the rank order unless the proposal is justified to be selected out of rank order based upon one or more of the following factors:

1. Availability of funding.

2. Balance/distribution of funds:

a. Geographically.

b. By type of institutions.

c. By type of partners.

d. By research areas.

e. By project types.

3. Whether this project duplicates other projects funded or considered for funding by NOAA or other federal agencies.

4. Program priorities and policy factors set forth in sections I.A. and B. and IV.B. of the Full Funding Opportunity.

5. Applicant's prior award performance.

6. Partnerships and/or Participation of targeted groups

7. Adequacy of information necessary for NOAA to make a NEPA determination and draft necessary documentation before recommendations for funding are made to the Grants Officer.

National Environmental Policy Act (NEPA)

NOAA must analyze the potential environmental impacts, as required by the National Environmental Policy Act (NEPA), for applicant projects or proposals which are seeking NOAA Federal funding opportunities. Detailed information on NOAA compliance with NEPA can be found at the following NOAA NEPA Web site: *http://www.nepa.noaa.gov/*, including our NOAA Administrative Order 216–6 for NEPA, *http://www.nepa.noaa.gov/NAO216_6_TOC.pdf*, and the Council on Environmental Quality implementation regulations, *http://ceq.eh.doe.gov/nepa/regs/ceq/toc_ceq.htm*.

Consequently, as part of an applicant's package, and under their description of their program activities, applicants are required to provide detailed information on the activities to be conducted, locations, sites, species and habitat to be affected, possible construction activities, and any environmental concerns that may exist (*e.g.*, the use and disposal of hazardous or toxic chemicals, introduction of non-indigenous species, impacts to endangered and threatened species, aquaculture projects, and impacts to coral reef systems). In addition to providing specific information that will serve as the basis for any required impact analyses, applicants may also be requested to assist NOAA in drafting of an environmental assessment, if NOAA determines an assessment is required. Applicants will also be required to cooperate with NOAA in identifying feasible measures to reduce or avoid any identified adverse environmental impacts of their proposal. The failure to do so shall be grounds for not selecting an application. In some cases if additional information is required after an application is selected, funds can be withheld by the Grants Officer under a special award condition requiring the recipient to submit additional environmental compliance information sufficient to enable NOAA to make an assessment on any impacts that a project may have on the environment.

Pre-Award Notification Requirements for Grants and Cooperative Agreements

The Department of Commerce Pre-Award Notification Requirements for Grants and Cooperative Agreements contained in the **Federal Register** notice of December 30, 2004 (69 FR 78389) are applicable to this solicitation.

Limitation of Liability

In no event will NOAA or the Department of Commerce be responsible for proposal preparation costs if these programs fail to receive funding or are cancelled because of other agency priorities. Publication of this announcement does not oblige NOAA to award any specific project or to obligate any available funds. Recipients and sub-recipients are subject to all Federal laws and agency policies, regulations and procedures applicable to Federal financial assistance awards.

Paperwork Reduction Act

This notification involves collection-of-information requirements subject to the Paperwork Reduction Act. The use of Standard Forms 424, 424A, 424B, and SF–LLL and CD–346 has been approved by the Office of Management and Budget (OMB) under control numbers 0348–0043, 0348–0044, 0348–0040 and 0348–0046 and 0605–0001. Notwithstanding any other provision of law, no person is required to respond to, nor shall any person be subject to a penalty for failure to comply with, a collection of information subject to the requirements of the PRA unless that collection of information displays a currently valid OMB control number.

Executive Order 12866

It has been determined that this notice is not significant for purposes of Executive Order 12866.

Executive Order 13132 (Federalism)

It has been determined that this notice does not contain policies with Federalism implications as that term is defined in Executive Order 13132.

Administrative Procedure Act/ Regulatory Flexibility Act

Prior notice and an opportunity for public comment are not required by the Administrative Procedure Act or any other law for rules concerning public property, loans, grants, benefits, and contracts (5 U.S.C. 553(a)(2)). Because notice and opportunity for comments are not required pursuant to 5 U.S.C. 553 or any other law, the analytical requirements of the Regulatory Flexibility Act (5 U.S.C. 601 *et seq.*) are inapplicable. Therefore, a regulatory flexibility analysis has not been prepared, and none has been prepared. It has been determined that this notice does not contain policies with Federalism implications as that term is defined in Executive Order 13132.

Dated: August 10, 2005.

Louisa Koch,

Deputy Assistant Administrator for NOAA Research.

[FR Doc. 05–16246 Filed 8–16–05; 8:45 am]

BILLING CODE 3510–KD–P

Reader Aids

Federal Register

Vol. 70, No. 158

Wednesday, August 17, 2005

CUSTOMER SERVICE AND INFORMATION

Federal Register/Code of Federal Regulations	
General Information, indexes and other finding aids	**202–741–6000**
Laws	**741–6000**
Presidential Documents	
Executive orders and proclamations	**741–6000**
The United States Government Manual	**741–6000**
Other Services	
Electronic and on-line services (voice)	**741–6020**
Privacy Act Compilation	**741–6064**
Public Laws Update Service (numbers, dates, etc.)	**741–6043**
TTY for the deaf-and-hard-of-hearing	**741–6086**

ELECTRONIC RESEARCH

World Wide Web

Full text of the daily Federal Register, CFR and other publications is located at: **http://www.gpoaccess.gov/nara/index.html**

Federal Register information and research tools, including Public Inspection List, indexes, and links to GPO Access are located at: **http://www.archives.gov/federal_register/**

E-mail

FEDREGTOC-L (Federal Register Table of Contents LISTSERV) is an open e-mail service that provides subscribers with a digital form of the Federal Register Table of Contents. The digital form of the Federal Register Table of Contents includes HTML and PDF links to the full text of each document.

To join or leave, go to **http://listserv.access.gpo.gov** and select *Online mailing list archives, FEDREGTOC-L, Join or leave the list (or change settings);* then follow the instructions.

PENS (Public Law Electronic Notification Service) is an e-mail service that notifies subscribers of recently enacted laws.

To subscribe, go to **http://listserv.gsa.gov/archives/publaws-l.html** and select *Join or leave the list (or change settings);* then follow the instructions.

FEDREGTOC-L and **PENS** are mailing lists only. We cannot respond to specific inquiries.

Reference questions. Send questions and comments about the Federal Register system to: **fedreg.info@nara.gov**

The Federal Register staff cannot interpret specific documents or regulations.

FEDERAL REGISTER PAGES AND DATE, AUGUST

44041–44218 1
44219–44462 2
44463–44846 3
44847–45272 4
45273–45522 5
45523–46064 8
46065–46402 9
46403–46740 10
46741–47076 11
47077–47710 12
47711–48056 15
48057–48268 16
48269–48472 17

CFR PARTS AFFECTED DURING AUGUST

At the end of each month, the Office of the Federal Register publishes separately a List of CFR Sections Affected (LSA), which lists parts and sections affected by documents published since the revision date of each title.

3 CFR

Proclamations:
7916 46401
Executive Orders:
13222 (See Notice of August 2, 2005) 45273
Administrative Orders:
Memorandums:
Memorandum of July 4, 2005 44041
Memorandums of July 30, 2005 46741
Memorandum of August 5, 2005 46397
Presidential Determination:
No. 2005-31 of August 2, 2005 46395
Notices:
Notice of August 2, 2005 45273

5 CFR

213 44219
315 44219
337 44847
370 47711
576 46065
Proposed Rules:
591 44976
1201 48081
2634 47138

7 CFR

1 47077
247 47052
301 .....44222, 45523, 46065
400 44222
916 44243
917 44243
923 44249
946 44252
996 44043
Proposed Rules:
82 44525
762 .....46779, 47730
920 48082
1755 45314

9 CFR

77 47078
78 47078
Proposed Rules:
3 45322
101 48325
116 48325
304 47147
308 47147
310 47147
320 47147
327 47147
381 47147
391 48238
416 47147
417 47147
590 48238
592 48238

10 CFR

110 46066
170 46265
171 46265
1303 47079
Proposed Rules:
20 45571
32 45571
51 .....47148, 48329
150 45571

12 CFR

11 46403
25 44256
201 48269
226 46066
228 44256
229 47085
335 44270
345 44256
Proposed Rules:
Ch. I 46779
Ch. II 46779
Ch. III 46779
Ch. V 46779
4 45323
19 45323
263 45323
264a 45323
308 45323
330 45571
336 45323
363 44293
507 45323
509 45323

13 CFR

Ch. III 47002, 47049

14 CFR

23 .....44463, 45275
36 45502
39 .....44046, 44273, 44274, 44276, 45526, 46067, 46069, 46072, 46074, 46076, 46743, 46747, 46752, 46754, 47086, 47716, 47720, 47722
61 45264
71 .....44465, 45275, 45527, 46078, 46754, 48057, 48238
73 .....44466, 45528
95 44278
97 47090
257 44848
1260 46079
Proposed Rules:
25 .....46099, 46100, 46102,

46104, 46106, 46108, 46110, 46112, 46113, 46115, 46785
39 .....44297, 45581, 45585, 45587, 45590, 45592, 45595, 46437, 43439, 46788, 46790, 48084, 48085, 48333, 48336, 48339
71 .....44300, 44533, 44868, 44869, 45599
93.....45250

15 CFR

4.....47725
738.....45276
740.....45276
745.....45276
772.....45276
774.....45276
801.....48270

16 CFR

Proposed Rules:
803.....47733

17 CFR

200.....44722
228.....44722, 46080
229.....44722, 46080
230.....44722
239.....44722
240 .....44722, 46080, 46089
242.....45529
243.....44722
249.....44722
274.....44722

18 CFR

35.....47093

19 CFR

Proposed Rules:
101.....47151
351.....47738

20 CFR

Proposed Rules:
404.....46792, 48342
416.....46792

21 CFR

179.....48057
510.....48272
520.....44048
522.....48272
524.....44719
556.....44048
558.....44049
1240.....48073
1301.....47094

22 CFR

Proposed Rules:
62.....47152

24 CFR

Proposed Rules:
200.....45492
206.....45498
290.....45492

25 CFR

542.....47097

26 CFR

1 .....44467, 45529, 45530, 46758, 47108, 47109
54.....47109

Proposed Rules:
1.....44535, 47155
41.....47160
48.....47160
145.....47160

27 CFR

Proposed Rules:
9.....47740

29 CFR

1601.....47127, 47128
4022.....47725
4044.....47725

Proposed Rules:
1910.....44074

30 CFR

5.....46336
15.....46336
18.....46336
19.....46336
20.....46336
22.....46336
23.....46336
27.....46336
28.....46336
33.....46336
35.....46336
36.....46336

Proposed Rules:
5.....46345
15.....46345
18.....46345
19.....46345
20.....46345
22.....46345
23.....46345
27.....46345
28.....46345
33.....46345
35.....46345
36.....46345

31 CFR

537.....48240

32 CFR

706 .....46758, 46759, 46761, 46762, 46763, 46765, 46766
806b.....46405

Proposed Rules:
174.....46116
175.....46116
176.....46116
581.....44536

33 CFR

100 .....44470, 45531, 46405
117 .....44852, 45534, 45535, 45536, 48273
165 .....44470, 45531, 45537, 46407, 48274

Proposed Rules:
100.....47160
110.....45607
117 .....46441, 48088, 48091, 48354

36 CFR

242.....46768
1191.....45283

Proposed Rules:
111.....47754
242.....46795
1011.....44870
1260.....47161

37 CFR

201.....44049

Proposed Rules:
202.....44878

39 CFR

3001.....48276
3002.....48276
3003.....48276

40 CFR

51.....44470
52 .....44052, 44055, 44478, 44481, 44852, 44855, 45539, 45542, 46090, 46770, 46772, 48073, 48078, 48277, 48280, 48283, 48285, 48287
62.....46773
63.....44285, 46684
81.....44470, 48238
180 .....44483, 44488, 44492, 44857, 46410, 46419, 46428, 46706
258.....44150
260.....45508
261 .....44150, 44496, 45508
264.....44150, 45508
265.....45508
268.....44505, 45508
270.....45508
273.....45508
300.....44063

Proposed Rules:
Ch. I.....46444
155.....48356
26.....46448
51.....44154
52 .....44075, 44537, 45607, 46126, 46127, 46448, 46798, 47757, 48093, 48238
60.....45608
62.....46798
63 .....45608, 46452, 46701
136.....48256
180.....45625
271.....46799
300.....44076, 45334
420.....46459

42 CFR

405.....47278
409.....45026
411.....45026
412.....47278, 47880
413.....47278
415.....47278
418.....45130
419.....47278
422.....47278
424.....45026
485.....47278
489.....45026

Proposed Rules:
402.....44879
405.....45764
410.....45764
411.....45764
413.....45764
414.....45764
426.....45764
483.....47759

43 CFR

39.....44512
1820.....45312

44 CFR

67.....47128, 47129

Proposed Rules:
67.....47166

45 CFR

1611.....45545

46 CFR

501.....44866
502.....44866

Proposed Rules:
389.....47771
531.....45626

47 CFR

2.....46576
25.....46576
51.....48290
73 .....44513, 44514, 44515, 44516, 44517, 44518, 44519, 44520, 46576, 48291, 48292, 48293, 48294
76.....48295
90.....46576
97.....46576

Proposed Rules:
1.....44537
73 .....44537, 44542, 44543, 48357, 48358, 48359, 48360, 48361, 48362

48 CFR

52.....46776

Proposed Rules:
204.....46807
235.....46807
246.....44077
252.....44077, 46807

49 CFR

390.....48008
392.....48008
393.....48008
541.....46092
551.....45565
571 .....44520, 46431, 47131, 48295, 48313
586.....46431

Proposed Rules:
571.....46807, 48362

50 CFR

17 .....46304, 46366, 46924
18.....48321
100.....46768
229.....44289
622.....48323
648.....44066, 44291
660 .....44069, 44070, 44072, 47727
679 .....44523, 46097, 46098, 46436, 46776, 46777, 47728

Proposed Rules:
17 .....44078, 44301, 44544, 44547, 46387, 46465, 46467, 48093, 48094
20.....44200, 45336
100.....46795
300.....47774
600.....47777

648.....45628
660 .....47777, 47781, 47782
679.....45638

REMINDERS

The items in this list were editorially compiled as an aid to Federal Register users. Inclusion or exclusion from this list has no legal significance.

RULES GOING INTO EFFECT AUGUST 17, 2005

COMMERCE DEPARTMENT

National Oceanic and Atmospheric Administration

Fishery conservation and management:
- Caribbean, Gulf, and South Atlantic fisheries—
  - Gulf of Mexico reef fish; published 7-18-05
  - Gulf of Mexico reef fish; published 8-17-05

FEDERAL RESERVE SYSTEM

Extensions of credit by Federal Reserve Banks (Regulation A):
- Primary and secondary credit—
  - Rates; increase approval; published 8-17-05

HEALTH AND HUMAN SERVICES DEPARTMENT

Food and Drug Administration

Animal drugs, feeds, and related products:
- Phenylbutazone; published 8-17-05
- Sponsor name and address changes—
  - Peptech, Animal Health Pty., Ltd.; published 8-17-05

PERSONNEL MANAGEMENT OFFICE

Acquisition regulations:
- Federal Employees Group Life Insurance—
  - Administrative policy, practices, and clarifying language changes; published 7-18-05

TRANSPORTATION DEPARTMENT

Federal Aviation Administration

Airworthiness directives:
- Hartzell Propeller Inc.; published 7-13-05

COMMENTS DUE NEXT WEEK

AGRICULTURE DEPARTMENT

Agricultural Marketing Service

Almonds grown in—
- California; comments due by 8-26-05; published 6-27-05 [FR 05-12623]

Apricots grown in—
- Washington; comments due by 8-26-05; published 6-27-05 [FR 05-12620]

Avocados grown in—
- Florida; comments due by 8-23-05; published 6-24-05 [FR 05-12616]

Cotton classing, testing and standards:
- Classification services to growers; 2004 user fees; Open for comments until further notice; published 5-28-04 [FR 04-12138]

Potatoes (Irish) grown in—
- Colorado; comments due by 8-26-05; published 6-27-05 [FR 05-12619]

AGRICULTURE DEPARTMENT

Forest Service

Oil and gas operations:
- Onshore Federal and Indian oil and gas leases; approval of operations (Order No.1); comments due by 8-26-05; published 7-27-05 [FR 05-14103]

AGRICULTURE DEPARTMENT

Farm Service Agency

Special programs:
- Interest Assistance Program; comments due by 8-22-05; published 6-22-05 [FR 05-12316]

AGRICULTURE DEPARTMENT

Natural Resources Conservation Service

Reports and guidance documents; availability, etc.:
- National Handbook of Conservation Practices; Open for comments until further notice; published 5-9-05 [FR 05-09150]

COMMERCE DEPARTMENT

Industry and Security Bureau

Chemical Weapons Convention Regulations:
- Small business entities; economic impact; comments due by 8-22-05; published 7-21-05 [FR 05-14441]

COMMERCE DEPARTMENT

National Oceanic and Atmospheric Administration

Fishery conservation and management:
- Caribbean, Gulf, and South Atlantic fisheries—
  - Gulf grouper; comments due by 8-24-05; published 7-25-05 [FR 05-14604]
- Magnuson-Stevens Act provisions—
  - National standard guidelines; comments due by 8-22-05; published 6-22-05 [FR 05-11978]

Marine mammals:
- Commercial fishing authorizations; incidental taking—
  - Atlantic Large Whale Take Reduction Plan; comments due by 8-22-05; published 7-13-05 [FR 05-13795]
- Taking and importation—
  - BP Exploration; Beaufort Sea, AK; offshore oil and gas facilities; construction and operation; comments due by 8-24-05; published 7-25-05 [FR 05-14620]

COMMERCE DEPARTMENT

Patent and Trademark Office

Practice and procedure:
- Chemical and three-dimensional biological structural data in electronic format; acceptance, processing, use and dissemination; comments due by 8-22-05; published 6-21-05 [FR 05-12199]
- Patent search fee refund provision changes; implementation; comments due by 8-22-05; published 6-21-05 [FR 05-12198]

CONSUMER PRODUCT SAFETY COMMISSION

Flammable Fabrics Act:
- Mattresses and Mattress and foundation sets; flammability (open flame) standard; comments due by 8-22-05; published 6-23-05 [FR 05-12387]

COURT SERVICES AND OFFENDER SUPERVISION AGENCY FOR THE DISTRICT OF COLUMBIA

Semi-annual agenda; Open for comments until further notice; published 12-22-03 [FR 03-25121]

DEFENSE DEPARTMENT

Acquisition regulations:
- Combating trafficking in persons; comments due by 8-22-05; published 6-21-05 [FR 05-12099]
- Construction contracting; comments due by 8-22-05; published 6-21-05 [FR 05-12096]
- Contractor insurance/pension reviews; comments due by 8-22-05; published 6-21-05 [FR 05-12097]
- Describing agency needs; comments due by 8-22-05; published 6-21-05 [FR 05-12098]
- Pilot Mentor-Protege Program; Open for comments until further notice; published 12-15-04 [FR 04-27351]

Federal Acquisition Regulation (FAR):
- Past performance evaluation of orders; comments due by 8-22-05; published 6-21-05 [FR 05-12183]

EDUCATION DEPARTMENT

Grants and cooperative agreements; availability, etc.:
- Vocational and adult education—
  - Smaller Learning Communities Program; Open for comments until further notice; published 2-25-05 [FR E5-00767]

ENERGY DEPARTMENT

Meetings:
- Environmental Management Site-Specific Advisory Board—
  - Oak Ridge Reservation, TN; Open for comments until further notice; published 11-19-04 [FR 04-25693]

ENERGY DEPARTMENT

Energy Efficiency and Renewable Energy Office

Commercial and industrial equipment; energy efficiency program:
- Test procedures and efficiency standards—
  - Commercial packaged boilers; Open for comments until further notice; published 10-21-04 [FR 04-17730]

ENERGY DEPARTMENT

Federal Energy Regulatory Commission

Electric rate and corporate regulation filings:
- Virginia Electric & Power Co. et al.; Open for comments until further notice; published 10-1-03 [FR 03-24818]

Electric utilities (Federal Power Act):
- Public utilities including regional transmission organizations; accounting and financial reporting requirements; comments due by 8-26-05; published 6-27-05 [FR 05-12626]

ENVIRONMENTAL PROTECTION AGENCY
Air quality implementation plans; approval and promulgation; various States:
Indiana; comments due by 8-24-05; published 7-25-05 [FR 05-14600]
New Jersey; comments due by 8-22-05; published 7-21-05 [FR 05-14406]
New York; comments due by 8-22-05; published 7-21-05 [FR 05-14407]
Environmental statements; availability, etc.:
Coastal nonpoint pollution control program—
Minnesota and Texas; Open for comments until further notice; published 10-16-03 [FR 03-26087]
Pesticides; tolerances in food, animal feeds, and raw agricultural commodities:
Cyhexatin; comments due by 8-26-05; published 7-27-05 [FR 05-14738]
Trifloxystrobin; comments due by 8-23-05; published 6-24-05 [FR 05-12447]
Solid wastes:
Municipal solid waste landfill permit programs—
Indiana; comments due by 8-25-05; published 7-26-05 [FR 05-14734]
Superfund program:
National oil and hazardous substances contingency plan priorities list; comments due by 8-25-05; published 7-26-05 [FR 05-14608]
Water pollution control:
National Pollutant Discharge Elimination System—
Concentrated animal feeding operations in New Mexico and Oklahoma; general permit for discharges; Open for comments until further notice; published 12-7-04 [FR 04-26817]
Water pollution; effluent guidelines for point source categories:
Meat and poultry products processing facilities; Open for comments until further notice; published 9-8-04 [FR 04-12017]

FEDERAL COMMUNICATIONS COMMISSION
Committees; establishment, renewal, termination, etc.:
Technological Advisory Council; Open for comments until further notice; published 3-18-05 [FR 05-05403]
Common carrier services:
Interconnection—
Incumbent local exchange carriers unbounding obligations; local competition provisions; wireline services offering advanced telecommunications capability; Open for comments until further notice; published 12-29-04 [FR 04-28531]
Wireless telecommunications services—
Commercial Spectrum Enhancement Act implementation; competitive bidding rules modernization; comments due by 8-26-05; published 7-27-05 [FR 05-14840]

FEDERAL MARITIME COMMISSION
Ocean shipping in foreign commerce:
Non-vessel-operating common carrier service arrangements; comments due by 8-23-05; published 8-8-05 [FR 05-15641]

GENERAL SERVICES ADMINISTRATION
Federal Acquisition Regulation (FAR):
Past performance evaluation of orders; comments due by 8-22-05; published 6-21-05 [FR 05-12183]
Federal Management Regulation:
Transportation management and transportation payment and audit; data collection standards and reporting requirements; comments due by 8-22-05; published 6-22-05 [FR 05-12282]

HEALTH AND HUMAN SERVICES DEPARTMENT
Food and Drug Administration
Color additives:
Mica-based pearlescent pigments; comments due by 8-22-05; published 7-22-05 [FR 05-14457]
Listing of color additives exempt from certification:
Tomato Lycopene extract and tomato lycopene concentrate; comments due by 8-25-05; published 7-26-05 [FR 05-14631]
Reports and guidance documents; availability, etc.:
Evaluating safety of antimicrobial new animal drugs with regard to their microbiological effects on bacteria of human health concern; Open for comments until further notice; published 10-27-03 [FR 03-27113]
Medical devices—
Dental noble metal alloys and base metal alloys; Class II special controls; Open for comments until further notice; published 8-23-04 [FR 04-19179]

HOMELAND SECURITY DEPARTMENT
Coast Guard
Anchorage regulations:
Maryland; Open for comments until further notice; published 1-14-04 [FR 04-00749]
Regattas and marine parades:
Cambridge Offshore Challenge, Choptank River, MD; comments due by 8-26-05; published 7-27-05 [FR 05-14754]
Strait Thunder Race; comments due by 8-26-05; published 6-27-05 [FR 05-12648]
Sunset Lake Hydrofest, NJ; comments due by 8-26-05; published 7-27-05 [FR 05-14755]
Rulemaking petitions:
Fall River, MA; marine spills of liquefied natural gas; comments due by 8-22-05; published 6-23-05 [FR 05-12399]

HOMELAND SECURITY DEPARTMENT
Federal Emergency Management Agency
Assistance Program Under the 9/11 Heroes Stamp Act of 2001; comments due by 8-25-05; published 7-26-05 [FR 05-14517]

HOUSING AND URBAN DEVELOPMENT DEPARTMENT
Grants and cooperative agreements; availability, etc.:
Homeless assistance; excess and surplus Federal properties; Open for comments until further notice; published 8-5-05 [FR 05-15251]

INTERIOR DEPARTMENT
Land Management Bureau
Oil and gas operations:
Onshore Federal and Indian oil and gas leases; approval of operations (Order No.1); comments due by 8-26-05; published 7-27-05 [FR 05-14103]

INTERIOR DEPARTMENT
Fish and Wildlife Service
Endangered and threatened species permit applications
Recovery plans—
Paiute cutthroat trout; Open for comments until further notice; published 9-10-04 [FR 04-20517]
Endangered and threatened species:
Findings on petitions, etc.—
California spotted owl; comments due by 8-22-05; published 6-21-05 [FR 05-11938]

LIBRARY OF CONGRESS
Copyright Office, Library of Congress
Copyright office and procedures:
Preregistration of certain unpublished copyright claims; comments due by 8-22-05; published 7-22-05 [FR 05-14516]

LIBRARY OF CONGRESS
Copyright Royalty Board, Library of Congress
Sound recordings use under statutory licenses; notice and recordkeeping; comments due by 8-26-05; published 7-27-05 [FR 05-14872]

NATIONAL AERONAUTICS AND SPACE ADMINISTRATION
Federal Acquisition Regulation (FAR):
Past performance evaluation of orders; comments due by 8-22-05; published 6-21-05 [FR 05-12183]

NUCLEAR REGULATORY COMMISSION
Environmental statements; availability, etc.:
Fort Wayne State Developmental Center; Open for comments until further notice; published 5-10-04 [FR 04-10516]
Spent nuclear fuel and high-level radioactive waste; independent storage; licensing requirements:
Approved spent fuel storage casks; list; comments due by 8-24-05; published 7-25-05 [FR 05-14568]
Spent nuclear fuel and high-level radioactive waste; independent storage; licensing requirements:
Approved spent fuel storage casks; list; comments due

by 8-24-05; published 7-25-05 [FR 05-14567]

SMALL BUSINESS ADMINISTRATION

Disaster loan areas:

Maine; Open for comments until further notice; published 2-17-04 [FR 04-03374]

STATE DEPARTMENT

Visas; nonimmigrant and immigrant documentation:

Unlawful voters; comments due by 8-22-05; published 6-21-05 [FR 05-12219]

OFFICE OF UNITED STATES TRADE REPRESENTATIVE

Trade Representative, Office of United States

Generalized System of Preferences:

2003 Annual Product Review, 2002 Annual Country Practices Review, and previously deferred product decisions; petitions disposition; Open for comments until further notice; published 7-6-04 [FR 04-15361]

TRANSPORTATION DEPARTMENT

Federal Aviation Administration

Airworthiness directives:

Aerospatiale; comments due by 8-22-05; published 7-21-05 [FR 05-14393]

Agusta S.p.A.; comments due by 8-23-05; published 6-24-05 [FR 05-12419]

Boeing; comments due by 8-22-05; published 7-6-05 [FR 05-13222]

Cessna; comments due by 8-22-05; published 6-21-05 [FR 05-12149]

General Electric Co.; comments due by 8-22-05; published 6-21-05 [FR 05-12173]

Lycoming; comments due by 8-22-05; published 7-22-05 [FR 05-14575]

McDonnell Douglas; comments due by 8-22-05; published 7-8-05 [FR 05-13436]

Sikorsky; comments due by 8-22-05; published 6-23-05 [FR 05-12417]

Turbomeca, S.A.; comments due by 8-23-05; published 6-24-05 [FR 05-12415]

Airworthiness standards:

Class E airspace; comments due by 8-26-05; published 7-12-05 [FR 05-13661]

Area navigation routes; comments due by 8-22-05; published 7-6-05 [FR 05-13266]

TRANSPORTATION DEPARTMENT

National Highway Traffic Safety Administration

Motor vehicle safety standards:

Designated seating positions and seat belt assembly anchorages; comments due by 8-22-05; published 6-22-05 [FR 05-12240]

TRANSPORTATION DEPARTMENT

Pipeline and Hazardous Materials Safety Administration

Pipeline safety:

Gas pipelines; polyamide-11 plastic pipe use; comments due by 8-22-05; published 6-22-05 [FR 05-12356]

TREASURY DEPARTMENT

Internal Revenue Service

Income taxes:

Attained age of the insured under section 7702; comments due by 8-24-05; published 5-24-05 [FR 05-10166]

Dual consolidated losses; comments due by 8-22-05; published 5-24-05 [FR 05-10160]

Partnership equity for services; comments due by 8-22-05; published 5-24-05 [FR 05-10164]

Qualified intellectual property contributions; information returns by donees; cross-reference; comments due by 8-22-05; published 5-23-05 [FR 05-10228]

Safe harbor for valuation under section 475; comments due by 8-22-05; published 5-24-05 [FR 05-10167]

Section 367 stock transfers involving foreign corporations in transactions governed by section 304; comments due by 8-23-05; published 5-25-05 [FR 05-10267]

Section 752 assumption of partner liabilities; cross reference; comments due by 8-24-05; published 5-26-05 [FR 05-10265]

LIST OF PUBLIC LAWS

This is a continuing list of public bills from the current session of Congress which have become Federal laws. It may be used in conjunction with "P L U S" (Public Laws Update Service) on 202–741–6043. This list is also available online at *http://www.archives.gov/federal_register/public_laws/public_laws.html*.

The text of laws is not published in the **Federal Register** but may be ordered in "slip law" (individual pamphlet) form from the Superintendent of Documents, U.S. Government Printing Office, Washington, DC 20402 (phone, 202–512–1808). The text will also be made available on the Internet from GPO Access at *http://www.gpoaccess.gov/plaws/index.html*. Some laws may not yet be available.

H.R. 3423/P.L. 109–43

Medical Device User Fee Stabilization Act of 2005 (Aug. 1, 2005; 119 Stat. 439)

H.R. 38/P.L. 109–44

Upper White Salmon Wild and Scenic Rivers Act (Aug. 2, 2005; 119 Stat. 443)

H.R. 481/P.L. 109–45

Sand Creek Massacre National Historic Site Trust Act of 2005 (Aug. 2, 2005; 119 Stat. 445)

H.R. 541/P.L. 109–46

To direct the Secretary of Agriculture to convey certain land to Lander County, Nevada, and the Secretary of the Interior to convey certain land to Eureka County, Nevada, for continued use as cemeteries. (Aug. 2, 2005; 119 Stat. 448)

H.R. 794/P.L. 109–47

Colorado River Indian Reservation Boundary Correction Act (Aug. 2, 2005; 119 Stat. 451)

H.R. 1046/P.L. 109–48

To authorize the Secretary of the Interior to contract with the city of Cheyenne, Wyoming, for the storage of the city's water in the Kendrick Project, Wyoming. (Aug. 2, 2005; 119 Stat. 455)

H.J. Res. 59/P.L. 109–49

Expressing the sense of Congress with respect to the women suffragists who fought for and won the right of women to vote in the United States. (Aug. 2, 2005; 119 Stat. 457)

S. 571/P.L. 109–50

To designate the facility of the United States Postal Service located at 1915 Fulton Street in Brooklyn, New York, as the "Congresswoman Shirley A. Chisholm Post Office Building". (Aug. 2, 2005; 119 Stat. 459)

S. 775/P.L. 109–51

To designate the facility of the United States Postal Service located at 123 W. 7th Street in Holdenville, Oklahoma, as the "Boone Pickens Post Office". (Aug. 2, 2005; 119 Stat. 460)

S. 904/P.L. 109–52

To designate the facility of the United States Postal Service located at 1560 Union Valley Road in West Milford, New Jersey, as the "Brian P. Parrello Post Office Building". (Aug. 2, 2005; 119 Stat. 461)

H.R. 3045/P.L. 109–53

Dominican Republic-Central America-United States Free Trade Agreement Implementation Act (Aug. 2, 2005; 119 Stat. 462)

H.R. 2361/P.L. 109–54

Department of the Interior, Environment, and Related Agencies Appropriations Act, 2006 (Aug. 2, 2005; 119 Stat. 499)

H.R. 2985/P.L. 109–55

Legislative Branch Appropriations Act, 2006 (Aug. 2, 2005; 119 Stat. 565)

S. 45/P.L. 109–56

To amend the Controlled Substances Act to lift the patient limitation on prescribing drug addiction treatments by medical practitioners in group practices, and for other purposes. (Aug. 2, 2005; 119 Stat. 591)

S. 1395/P.L. 109–57

Controlled Substances Export Reform Act of 2005 (Aug. 2, 2005; 119 Stat. 592)

Last List August 2, 2005

Public Laws Electronic Notification Service (PENS)

PENS is a free electronic mail notification service of newly enacted public laws. To subscribe, go to *http://listserv.gsa.gov/archives/publaws-l.html*

Note: This service is strictly for E-mail notification of new laws. The text of laws is not available through this service. **PENS** cannot respond to specific inquiries sent to this address.