DEPARTMENT OF TRANSPORTATION

Federal Motor Carrier Safety Administration

49 CFR Parts 390, 392 and 393

[Docket No. FMCSA–1997–2364]

RIN 2126–AA61

Parts and Accessories Necessary for Safe Operation; General Amendments

AGENCY: Federal Motor Carrier Safety Administration (FMCSA), DOT.

ACTION: Final rule.

SUMMARY: FMCSA amends part 393 of the Federal Motor Carrier Safety Regulations (FMCSRs), Parts and Accessories Necessary for Safe Operation. The amendments are intended to remove obsolete and redundant regulations; respond to several petitions for rulemaking; provide improved definitions of vehicle types, systems, and components; resolve inconsistencies between part 393 and the National Highway Traffic Safety Administration's Federal Motor Vehicle Safety Standards (49 CFR part 571); and codify certain FMCSA regulatory guidance concerning the requirements of part 393. Generally, the amendments do not involve the establishment of new or more stringent requirements, but a clarification of existing requirements. This action is intended to make many sections more concise, easier to understand and more performance oriented.

DATES: The rule is effective September 14, 2005. The publications incorporated by reference in this final rule are approved by the Director of the Office of the Federal Register as of September 14, 2005.

FOR FURTHER INFORMATION CONTACT: Mr. Jeffrey J. Van Ness, Vehicle and Roadside Operations Division, Federal Motor Carrier Safety Administration, 202–366–0676, 400 Seventh Street, SW., Washington, DC 20590.

SUPPLEMENTARY INFORMATION:

Legal Basis for the Relemaking

This rulemaking is based on the authority of the Motor Carrier Act of 1935 and the Motor Carrier Safety Act of 1984 (49 U.S.C. 31131 *et seq.*).

The Motor Carrier Act of 1935, as amended, provides that ''[t]he Secretary of Transportation (Secretary) may prescribe requirements for: (1) Qualifications and maximum hours-of-service of employees of, and safety of operation and equipment of, a motor carrier; and (2) qualifications and maximum hours-of-service of employees of, and standards of equipment of, a private motor carrier, when needed to promote safety of operation.'' (49 U.S.C. 31502(b)).

This final rule amends the Federal Motor Carrier Safety Regulations (FMCSRs) to remove obsolete and redundant regulations; respond to several petitions for rulemaking; provide improved definitions of vehicle types, systems, and components; resolve inconsistencies between part 393 and the National Highway Traffic Safety Administration's Federal Motor Vehicle Safety Standards (49 CFR part 571); and codify certain FMCSA regulatory guidance concerning the requirements of part 393. Generally, the amendments do not involve the establishment of new or more stringent requirements, but a clarification of existing requirements. This action is intended to make many sections more concise, easier to understand and more performance oriented. The adoption and enforcement of such rules is specifically authorized by the Motor Carrier Act of 1935. This final rule rests squarely on that authority.

The Motor Carrier Safety Act of 1984 provides concurrent authority to regulate drivers, motor carriers, and vehicle equipment. It requires the Secretary to ''prescribe regulations on commercial motor vehicle safety.'' The regulations shall prescribe minimum safety standards for commercial motor vehicles. At a minimum, the regulations shall ensure that: (1) Commercial motor vehicles are maintained, equipped, loaded, and operated safely; (2) the responsibilities imposed on operators of commercial motor vehicles do not impair their ability to operate the vehicles safely; (3) the physical condition of operators of commercial motor vehicles is adequate to enable them to operate vehicles safely; and (4) the operation of commercial motor vehicles does not have a deleterious effect on the physical condition of the operators' (49 U.S.C. 31136(a)).

This final rule concerns parts and accessories necessary for the safe operation of commercial motor vehicles. It is based primarily on section 31136(a)(1) and (2), and secondarily on section 31136(a)(4). This rulemaking would ensure CMVs are maintained, equipped, loaded, and operated safely by requiring certain vehicle components, systems and equipment to meet minimum standards such that the mechanical condition of the vehicle is not likely to cause a crash or breakdown.

The final rule provides improved guidance concerning parts and accessories to CMV drivers who are responsible for ensuring vehicles are in safe and proper operating condition before each trip, and reporting to their employers any defects or deficiencies observed by, or reported to, the driver during the work day. By ensuring commercial motor vehicles are in safe and proper working order, it is less likely that the mechanical condition of the vehicle would cause a crash or breakdown. Therefore, drivers' responsibilities for the operation of their commercial motor vehicles do not, if fulfilled in accordance with the regulations, impair their ability to operate vehicles safely.

Finally, the rulemaking would ensure the operation of CMVs does not have a deleterious effect on the physical condition of the operators of vehicles by requiring vehicle components and systems meet specific performance requirements. Compliance with these requirements would help to ensure that the mechanical condition of the vehicle is not likely to cause a crash or breakdown.

Therefore, FMCSA considers the requirements of 49 U.S.C. 31136 (a)(1), (2) and (4) to be applicable to this rulemaking action. The rulemaking would amend regulations concerning commercial vehicle equipment, prescribe regulations applicable to the responsibilities frequently imposed upon drivers to ensure their ability to operate safely is not impaired, and help to prevent serious injuries to CMV drivers that could result from improperly secured loads.

With regard to 49 U.S.C. 31136(a)(3), FMCSA does not believe this provision concerning the physical condition of drivers is applicable to this rulemaking because this rulemaking does not concern the establishment of driver qualifications standards. This final rule addresses safety requirements applicable to commercial motor vehicle parts and accessories necessary for safe operation and does not include issues related to the physical qualifications or physical capabilities of drivers who must operate such vehicles.

However, before prescribing any such regulations, FMCSA must consider the ''costs and benefits'' of any proposal (49 U.S.C. 31136(c)(2)(A)).

This final rule requires commercial motor vehicles to be maintained, equipped and operated safely. It removes obsolete and redundant regulations; responds to several petitions for rulemaking; provides improved definitions of vehicle types, systems, and components; resolves inconsistencies between part 393 and the National Highway Traffic Safety Administration's Federal Motor Vehicle

Safety Standards (49 CFR part 571); and codifies certain FMCSA regulatory guidance concerning the requirements of part 393. The fundamental purpose of 49 CFR part 393 Parts and Accessories Necessary for Safe Operation is to ensure that no employer shall operate a commercial motor vehicle or cause or permit it to be operated, unless it is equipped in accordance with the requirements and specifications of this part. However, nothing contained in part 393 shall be construed to prohibit the use of additional equipment and accessories, not inconsistent with or prohibited by part 393, provided such equipment and accessories do not decrease the safety of operation of the motor vehicles on which they are used. Compliance with the rules concerning parts and accessories is necessary to ensure vehicles are equipped with the specified safety devices and equipment.

Background

On April 7, 1997, the Federal Highway Administration (FHWA) published a notice of proposed rulemaking (NPRM) to amend part 393 (62 FR 18170). FHWA received numerous petitions for rulemaking and requests for interpretation of the requirements of part 393 which raised the need for amendments to clarify several provisions of the safety regulations. In addition, the National Highway Traffic Safety Administration (NHTSA), the Federal agency responsible for establishing safety standards for the manufacture of motor vehicles and certain motor vehicle equipment, made several amendments to its Federal Motor Vehicle Safety Standards (FMVSSs) that necessitate amendments to the FMCSRs in order to eliminate inconsistencies between part 393 and the FMVSSs. Comments were requested by June 13, 1997.

Extension of Comment Period

On June 12, 1997, FHWA published a notice in the **Federal Register** to extend the comment period until July 28, 1997 (69 FR 32066). The extension was in response to a request from the Motor Equipment Manufacturers Association (MEMA) (62 FR 32066). MEMA requested the extension in order to develop what it described as ''meaningful and responsive comments'' to the proposed revisions of § 393.25, *Requirements for lamps other than head lamps,* § 393.45, *Brake tubing and hose adequacy,* and § 393.46, *Brake tubing and hose connections.* A copy of the MEMA request is included in the docket.

Publication of Final Rule on § 393.60, Glazing in Specified Openings

On January 9, 1998, FHWA revised its requirements concerning glazing materials, windshield condition, coloring and tinting of windshields and windows, and obstruction to the driver's field of view for commercial motor vehicles operated in interstate commerce (63 FR 1383). The revision was intended to remove obsolete regulatory language, establish requirements that were more performance-based than the previous rules, and respond to requests for waivers to allow the use of windshield-mounted transponders. The agency had proposed revising § 393.60 as part of the April 14, 1997, NPRM. Upon review of the docket comments and requests for waivers, the agency decided to issue a final rule on glazing materials, windshields and windows and to publish, at a later date, a final rule on the remaining issues covered in the NPRM.

Public Meeting About the Proposed Changes to the Brake Hose Regulations

On March 24, 1998, FHWA held a public meeting to discuss requirements for brake hoses used on commercial motor vehicles. An announcement of the meeting was published in the **Federal Register** on February 20, 1998 (63 FR 8606). Several brake hose manufacturers submitted comments in response to the 1997 notice of proposed rulemaking expressing opposition to the proposed changes to §§ 393.45 and 393.46. They believe the proposed removal of references to the Society of Automotive Engineers' (SAE) standards would have an adverse impact on safety. Some of the brake hose manufacturers contacted members of Congress to voice their concerns. As a result, the agency received numerous calls from congressional staff and letters from members of the House and Senate.

At the request of congressional staff, FHWA met with representatives from several congressional offices on October 24, 1997, to explain the proposed rulemaking and the roles of the FHWA and the NHTSA. During this meeting FHWA offered to hold a public meeting concerning brake hoses. The meeting was intended to initiate dialogue between FHWA, NHTSA, manufacturers of brake hoses, brake hose assemblies, and brake hose end fittings for use on commercial motor vehicles, and interested parties concerning the adequacy of Federal requirements for brake hoses and related components. Copies of presentations made by the participants are included in the docket.

On October 30, 1998, three brake manufacturers, Elf Atochem North America, Inc., Mark IV Industrial/Dayco Eastman, and Parker Hannifin Corporation [1] filed a joint petition for rulemaking with NHTSA. The petitioners requested that certain requirements relating to brake hoses, brake hose tubing, and brake hose end fittings that are administered by FHWA be incorporated into FMVSS No. 106 (49 CFR 571.106). Specifically, the petitioners requested incorporation of the requirements of 49 CFR 393.45 (Brake tubing and hose, adequacy) and 49 CFR 393.46 (Brake tubing and hose connections) into FMVSS No. 106. On May 15, 2003, NHTSA published an NPRM proposing amendments to FMVSS No. 106 (68 FR 26384). On December 20, 2004 NHTSA published its final rule amending FMVSS No. 106 (69 FR 76298).

In consideration of NHTSA's revision of FMVSS No. 106, FMCSA believes the issues raised by commenters responding to the proposed revisions to 49 CFR 393.45 and 393.46 have been resolved through NHTSA's rulemaking.

Discussion of Comments Received in Response to the April 14, 1997, NPRM

The agency received 36 comments in response to the NPRM. The commenters were: Air Ride Control, Inc.; Amerex Corporation; the American Trucking Associations (ATA) (two submissions to the docket); Burns Consulting Associates; Colorado Department of Public Safety; Commercial Vehicle Safety Alliance (CVSA) (two submissions to the docket); Robert J. Crail, a transportation engineering consultant; W. E. Currie, a consulting engineer; Dana Corporation, Boston Weatherhead Division; Electronic Controls Company; Elf Atochem North America, Inc.; Georgia Public Service Commission; Grote Industries, Inc.; Hüls America, Inc.; Lufkin Trailers; Mark IV Industrial—Dayco Eastman; The Commonwealth of Massachusetts, Department of Public Utilities; National Association of State Fire Marshals; National Association of Trailer Manufacturers; National Automobile Dealers Association; National Automobile Transporters Association; National Propane Gas Association; Oklahoma Highway Patrol; Parker Hannifin Corporation (two submissions to the docket); Rockwell International Corporation (the automotive division of

[1] Since the petition was filed with NHTSA, Mark IV Industrial/Dayco Eastman has been acquired by Parker Hannifin Corporation. Elf Atochem North America, Inc. was integrated into Atofina Chemical, Inc. The successor petitioning companies are referred to as Parker/Atofina.

Rockwell is now Meritor Automotive); Star Headlight and Lantern Company, Inc.; Transportation Safety Equipment Institute; Truck Manufacturers Association; Truck Trailer Manufacturers Association; UBE Industries (America), Inc.; Donald H. Verhoff; and, Wells Cargo, Inc.

Of the comments received, 10 focused on the issue of the agency's proposal to remove references to certain SAE brake hose standards and recommended practices. Because this issue is being addressed through a separate rulemaking by NHTSA, FMCSA will not provide a discussion of brake hose manufacturing standards.

With regard to the remaining comments, the majority of the commenters supported the proposed amendments. Several, however, suggested minor enhancements or modifications to the specific wording proposed by the agency, or changes in terminology. For example, a transportation engineering consultant suggested we use ''upper beam'' and ''lower beam'' when describing headlight terminology. Along similar lines, AMERIX Corporation, a fire extinguisher manufacturer, advised us that the type 4B:C extinguisher referenced in the proposed amendments to § 393.95 is no longer manufactured.

The National Association of State Fire Marshals (NASFM) argued that this rulemaking does nothing to address their 1995 petition to amend the FMCSRs to require fire extinguishers on all lightweight vehicles (under 10,000 pounds gross vehicle weight rating (GVWR)), operated in interstate commerce. A copy of the petition was attached. The Agency previously explained to NASFM that generally, the FMCSRs are not applicable to lightweight vehicles and that the reference to lightweight vehicles under 49 CFR 393.95 was an error. The term was supposed to have been removed when the agency incorporated the statutory definition of CMV from the Motor Carrier Act of 1984. Fire extinguishers are required on all power units subject to the FMCSRs, including vehicles designed or used to transport 9 to 15 passengers (including the driver), for direct compensation, if the vehicle is driven more than 75 air miles beyond the driver's normal work reporting location. This rulemaking was never intended to address this issue.

Amendments to 49 CFR Parts 390, 392 and 393: Section-by-Section Discussion of the Amendments

Part 390, Subpart A—General Applicability and Definitions

Section 390.5—Definition of Driveaway-Towaway Operation

Parts 393 and 396 of the FMCSRs include several exceptions for driveaway-towaway operations. Currently, a driveaway-towaway operation is defined as one in which a motor vehicle constitutes the commodity being transported and one or more set of wheels of the vehicle being transported are on the surface of the roadway during transportation. The driveaway-towaway exceptions are intended to address situations in which compliance with some of the vehicle regulations is not practicable because of the circumstances surrounding the delivery or transportation of the vehicle. Examples of driveaway-towaway operations include the delivery of a newly manufactured commercial motor vehicle from a manufacturer to a dealership, the delivery of a new or used motor vehicle from the dealership to the purchaser, or certain movements of vehicles to a repair or maintenance facility. Among the provisions of parts 393 and 396 which do not apply to driveaway-towaway operations are the requirements for lamps and reflectors, brakes, driver vehicle inspection reports, maintenance records, and periodic inspection.

The concept of providing exceptions for such operations dates back to the former Interstate Commerce Commission's (ICC) May 27, 1939, Order under Ex-Parte No. MC–2 (14 M.C.C. 669, at 679). A driveaway-towaway operation was originally defined by the ICC as ''any operation in which a single motor vehicle or combination of motor vehicles, new or used, constitutes the commodity being transported and in which the motive power of any such motor vehicles is utilized.'' In 1952, the ICC revised the definition to read ''any operation in which any motor vehicle or motor vehicles, new or used, constitute the commodity being transported, when one or more set of wheels of any such motor vehicle or motor vehicles are on the roadway during the course of transportation; whether or not any such motor vehicle furnishes the motive power.'' (17 FR 4422, 4423, May 15, 1952).

The current definition of a driveaway-towaway operation was published on May 19, 1988 (53 FR 18052). FMCSA continues to believe the definition does not provide sufficient guidance in identifying the specific types of vehicle operations covered. Therefore, FMCSA revises the definition of driveaway-towaway operation to limit the use of the various exceptions to situations in which motor vehicles are being transported: (1) Between vehicle manufacturer's facilities, (2) between a vehicle manufacturer and a dealership or a purchaser, (3) between a dealership, or other entity selling or leasing the vehicle, and a purchaser or lessee, (4) to a motor carrier's terminal or repair facility for the repair of disabling damage (as defined in § 390.5) following a crash, (5) to a motor carrier's terminal or repair facility for repairs associated with the failure of a vehicle component or system, or (6) by means of a saddle-mount or tow-bar. In addition, the driveaway-towaway exceptions are applicable only in those cases where the motor vehicles are not transporting cargo or passengers. The revision is intended to reduce confusion and it is responsive to commenters who requested that the definition include movements of vehicles between manufacturers' facilities, and the towing of vehicles after a breakdown.

Part 392, Subpart D—Use of Lighted Lamps and Reflectors

Section 392.33—Obscured Lamps or Reflector

FMCSA amends § 392.33 to include an exception for the obstruction of trailer conspicuity treatments on the front end protection device. The NHTSA requires trailer manufacturers to apply retroreflective sheeting to the front end protection devices or headerboards of trailers manufactured on or after December 1, 1993 (49 CFR 571.108, S5.7.1.4, entitled location). Because the headerboard is located at the front of flatbed trailers, the cargo may, depending upon its height, obstruct the conspicuity material located on the headerboard. FMCSA recognizes that this temporary obstruction of the reflective material cannot be avoided in many cases and does not believe that it is appropriate to penalize motor carriers if this occurs.

Part 393, Subpart A—General

Section 393.1—Scope of the Rules of This Part

FMCSA is revising § 393.1 to clarify the applicability of the requirements of part 393. Although § 390.3 explains the applicability of the FMCSRs, and § 390.5 defines the term ''commercial motor vehicle,'' many private motor carriers of property and private motor carriers of passengers do not understand

the applicability of the provisions in part 393 when a lightweight vehicle is used to tow a trailer in interstate commerce. With the exception of vehicles designed or used to transport 9 to 15 passengers (including the driver), for direct compensation, more than 75 air miles beyond the driver's normal work reporting location, and vehicles transporting certain quantities of hazardous materials, vehicles with a GVWR below 4,536 kg (10,001 pounds) or designed to transport less than 16 passengers are not subject to the FMCSRs when operated singly in interstate commerce. However, when a small vehicle is coupled to a trailer, the gross combination weight rating (GCWR) often exceeds 4,536 kg (10,001 pounds), making the combination subject to the FMCSRs.

Part 393 cross-references several Federal Motor Vehicle Safety Standards which distinguish between vehicles above and below 4,536 kg (10,001 pounds) and passenger vehicles designed to transport fewer than 16 passengers. This rulemaking includes numerous proposals to clarify the cross-references to the FMVSS so that carriers and inspectors can readily locate the applicable paragraphs within the FMVSSs. The amendment to § 393.1 is consistent with that goal.

Section 393.5—Definitions

FMCSA is amending § 393.5 by adding definitions of air brake system, air-over-hydraulic brake subsystem, auxiliary driving lamp, boat trailer, brake power assist unit, brake power unit, electric brake system, emergency brake, front fog lamp, hydraulic brake system, intermodal shipping (cargo) containers, multi-piece windshield, split service brake system, tow bar, trailer kingpin, vacuum brake system, and windshield. In addition, the definitions for chassis, clearance lamp, container chassis, heater, heavy hauler trailer, parking brake system, side marker lamps (intermediate), and side marker lamps are revised. The definition of bus is being removed from § 393.5 in favor of the definition found in § 390.5.

The definitions of brake systems and components make the brake requirements under subpart C of part 393 easier to understand and enforce.

The definitions of an air brake system and an air-over-hydraulic brake subsystem are based upon NHTSA's July 18, 1995, final rule on FMVSS No. 121 (60 FR 36741). The NHTSA amended FMVSS No. 121 to include a definition of an air-over-hydraulic brake subsystem and to make it clear that vehicles equipped with such systems are classified as air braked vehicles. In initially issuing FMVSS No. 121, NHTSA stated that ''it should be noted that the term 'air brake system' as defined in the standard applies to the brake configuration commonly referred to as 'air-over-hydraulic,' in which failure of either medium can result in complete loss of braking ability.'' (36 FR 3817, February 27, 1971). Because NHTSA has considered air-over-hydraulic brake systems subject to FMVSS No. 121 for more than 20 years, FMCSA's adoption of NHTSA's definitions are not likely to affect the applicability of the brake requirements under part 393.

The amended definition of a boat trailer is the same as that contained in 49 CFR § 571.3. The NHTSA defines boat trailer as ''a trailer designed with cradle-type mountings to transport a boat and configured to permit launching of the boat from the rear of the trailer.'' FMCSA includes this definition because § 393.11 includes requirements for lamps and reflectors on boat trailers.

FMCSA is replacing its definition of ''emergency brake system'' with NHTSA's definition for ''emergency brake.'' This change ensures consistency between FMCSA's brake regulations covering motor carriers and NHTSA's regulations covering manufacturers.

The agency is adopting NHTSA's FMVSS No. 105 definition of a split service brake system and includes it under § 393.5 to improve the clarity of the hydraulic brake system requirements under subpart C of part 393.

Definitions of an electric brake system and a vacuum brake system are added to § 393.5 to support other revisions to the brake system requirements of part 393. Because there are no FMVSSs which cover electric and vacuum brake systems, many of the brake requirements under part 393 are *de facto* manufacturing standards. To better identify the applicable requirements, however, the revisions to subpart C specifically reference electric and vacuum brakes. These definitions prevent confusion or misunderstandings on the part of motor carriers and enforcement officials.

With regard to the definition of a chassis, the agency is deleting the current reference to a ''truck or trailer'' in favor of the term ''commercial motor vehicle,'' which includes trucks, truck tractors, trailers, buses and converter dollies. This is especially necessary since the definition of a truck in § 390.5 explicitly excludes truck tractors.

The definition of a clearance lamp is being replaced with one that appeared in the Society of Automotive Engineers' definition (Glossary of Automotive Terms, SP–750, February 1988). Although the SAE publication is now out-of-print, the Agency continues to believe the SAE definition provides a better description of the location and function of the clearance lamps than the current definition in § 393.5.

As for the definition of a heater, FMCSA is amending the reference to paragraph (1) [the number ''one''] of § 177.834 with a reference to paragraph (l) [the letter ''l']. The reference to paragraph (1) [the number ''1''] was a typographical error.

A definition of a trailer kingpin is being added to cover non-driveaway-towaway operations. Currently, the definition of a saddle-mount includes a description of a ''king-pin.'' However, this definition does not appear to be appropriate for the trailer kingpin nor is the definition the same as that in the SAE's Truck & Bus Industry Glossary, SP–732, February 1988. Although the SAE publication is now out-of-print, FMCSA continues to believe the SAE's definition will ensure that definitions in part 393 are consistent with industry definitions.

To clarify the applicability of parking brake requirements, the agency is amending the definition of a parking brake system in § 393.5 to replace the term ''vehicle'' with ''motor vehicle,'' which is defined in § 390.5.

The agency is amending the definitions of ''side marker lamp (intermediate)'' and ''side marker lamp'' to include motor vehicles other than trailers. Currently, both terms are defined only in the context of trailers. However, side marker lamps are required on almost all motor vehicles and intermediate side marker lamps are required on almost all motor vehicles more than 914.4 centimeters (cm) (30 feet) in length. Therefore, FMCSA is revising the definitions to include trucks, truck-tractors, and buses and to make both definitions consistent with the requirements under § 393.11 relating to side marker lamps and FMVSS No. 108, NHTSA's requirements for lamps and reflective devices.

On November 23, 1990, NHTSA amended its definition of a heavy hauler trailer to specifically exclude container chassis trailers (55 FR 48850). To maintain consistency between the definitions used by the FMCSA and NHTSA, FMCSA is amending its definition of a heavy hauler trailer to exclude container chassis trailers as well.

Subpart B—Lighting Devices, Reflectors, and Electrical Equipment

FMCSA revises the title of subpart B to read ''Lamps, Reflective Devices, and Electrical Wiring.'' The new title is more consistent with the title of FMVSS No. 108, entitled ''Lamps, reflective devices, and associated equipment.'' The new title would reference electrical wiring instead of associated equipment because subpart B includes electrical wiring requirements for several vehicle systems in addition to the lamps required by FMVSS No. 108.

Section 393.9—Lamps Operable

FMCSA amends § 393.9 to codify regulatory guidance concerning the use of lamps which are not required by § 393.11 and FMVSS No. 108, and to address obstruction of lamps. Section 393.9 requires that lamps be capable of being operated at all times. FMCSA has issued regulatory guidance indicating that § 393.9 is only applicable to those lamps which are required by the FMCSRs. Therefore, if a motor carrier installs additional lamps which are found to be inoperable, for whatever reason, the carrier should not be considered in violation of § 393.9. FMCSA amends § 393.9 to codify this regulatory guidance.

Section 393.11—Lighting Devices and Reflectors

FMCSA revises the title of § 393.11 to read ''Lamps and reflective devices'' to maintain consistency between the title for subpart B and § 393.11. The FMCSA is also amending § 393.11 to require that commercial motor vehicles manufactured on or after December 25, 1968, meet the requirements of FMVSS No. 108 in effect at the time of manufacture, or any subsequent requirements under FMVSS No. 108. Currently, § 393.11 only requires that vehicles manufactured on or after March 7, 1989, meet the requirements of FMVSS No. 108. Vehicles manufactured prior to March 7 may meet either FMVSS No. 108 or the requirements of part 393 in effect on the date of manufacture.

Because NHTSA's FMVSS No. 108 became effective on December 25, 1968, manufacturers have been required to meet these requirements since that date. FMCSA's reference to March 7, 1989, under § 393.11 is therefore inappropriate. Vehicles manufactured between December 25, 1968, and March 7, 1989, were originally manufactured to meet FMVSS No. 108, and motor carriers who have maintained lamps and reflectors in the required locations for these older vehicles would not be affected by the revision.

In addition, FMCSA revises § 393.11 to provide better guidance on the requirements for trailers, and to correct several omissions in Table 1 of that section. The paragraph preceding Table 1 does not present a clear statement of the requirements for lamps and reflectors.

On December 10, 1992, NHTSA published a final rule requiring that trailers manufactured on or after December 1, 1993, which have an overall width of 2,032 mm (80 inches) or more and a GVWR of more than 4,536 kg (10,000 pounds), be equipped on the sides and rear with a means for making them more visible on the road (57 FR 238). Trailers manufactured exclusively for use as offices or dwellings are exempt.

NHTSA's rule allows trailer manufacturers to install either red and white retroreflective sheeting or reflex reflectors. Manufacturers of retroreflective sheeting or reflectors are required to certify compliance of their product with FMVSS No. 108 (49 CFR 571.108) whether the product is for use as original or replacement equipment.

Currently, § 393.11 requires that all lamps and reflective devices on motor vehicles placed in operation after March 7, 1989, meet the requirements of FMVSS No. 108 in effect on the date of manufacture. Therefore, trailers manufactured on or after December 1, 1993, must have reflective devices of the type and in the locations specified by FMVSS No. 108. To make certain that all motor carriers operating trailers subject to the FMCSRs are aware of their responsibility to maintain the conspicuity treatment, FMCSA is adding detailed language under § 393.11. FMCSA cross-references the specific paragraphs of FMVSS No. 108 related to the applicability of NHTSA's trailer conspicuity standards, the required locations for the conspicuity material, and the certification and marking requirements.

FMCSA notes that during NHTSA's rulemaking, the issue of requiring conspicuity material on the rear underride device generated industry concerns about the maintainability of the retroreflective sheeting in that location. As stated in the preamble to NHTSA's December 10, 1992, final rule:

> Objections were based on the potential for frequent damage that would cause trailers in use to fail inspections by [FMCSA]. NHTSA has observed that the horizontal bar of the underride device is less subject to docking impacts than the vertical bars because it is below most dock surfaces (and under a NHTSA proposal [a reference to the NHTSA's supplemental notice of rulemaking concerning rear impact guards (57 FR 252, January 3, 1992)] is even lower). Therefore, the final rule requires retroreflective material to be applied to the horizontal device, instead of the vertical ones. NHTSA believes that the original conspicuity material should have a long useful life on a large number of trailers, especially if it is applied to a recessed surface. However, NHTSA recognizes that routine damage, as a practical matter, may be unavoidable for some trailers as a consequence of their particular use. Therefore, [FMCSA] will consider the exclusion of conspicuity treatment from the rear underride device in any future rulemaking concerning trailer conspicuity requirements for vehicles subject to 49 CFR 393 Parts and Accessories Necessary for Safe Operation, and 49 CFR 396 Inspection [,Repair,] and Maintenance.

The cross-reference to NHTSA's conspicuity requirements includes a reference to the specific paragraphs within FMVSS No. 108 concerning the locations for the conspicuity treatments. This does not, however, include an exemption to the requirement that motor carriers maintain the conspicuity material on the rear underride device.

In addition to providing explicit guidance on trailer conspicuity, FMCSA amends § 393.11 to codify certain regulatory guidance concerning the use of amber stop lamps, amber tail lamps, and optical combinations which would involve the use of amber tail lamps or amber stop lamps. Motor vehicles are required to be equipped with at least two red stop lamps and two red tail lamps. However, some motor carriers have expressed an interest in using additional stop lamps and/or tail lamps that are amber in color.

Federal Motor Vehicle Safety Standard No. 108 does not allow amber as an alternate color for a tail lamp. In an August 23, 1990, interpretation to a manufacturer of lamps and reflectors, NHTSA stated that ''We have no intention of allowing amber as an alternate color for a tail lamp.'' In a December 10, 1991, interpretation to FHWA, NHTSA indicated that a combination amber turn signal and tail lamp is implicitly prohibited by FMVSS No. 108. NHTSA stated:

> When combined with an amber turn signal lamp, the intensity of an amber tail lamp might mask the turn signal operation. Because motorists are not used to seeing steady burning amber lamps on the rear of vehicles, amber taillamps could lead to momentary confusion of a driver following the trailer when the stop lamps are activated, thereby impairing the effectiveness of the stop signal. The presence of simultaneously burning amber and red taillamps could also create some confusion of a following driver approaching the trailer from around a corner to its rear. Thus we have concluded that a

combination amber turn signal and taillamp is implicitly prohibited by Standard No. 108.

FMCSA agrees that motorists are not use to seeing amber lamps used in conjunction with red lamps to signal that the vehicle is stopping and believes the FMCSRs should be amended explicitly to prohibit the use of amber tail lamps.

To ensure the prohibition does not conflict with FMVSS No. 108, FMCSA reviewed NHTSA requirements. Section S5.1.3 of FMVSS No. 108 prohibits the installation of supplementary lighting equipment that ''impairs the effectiveness of lighting equipment required by this standard.'' Although the determination of impairment is initially that of the vehicle's manufacturer in certifying that the vehicle meets all applicable FMVSSs, NHTSA may review that determination and, if clearly erroneous, inform the manufacturer of its views.

Because § 393.11 cross-references FMVSS No. 108, FMCSA's regulatory guidance on the use of amber stop lamps and tail lamps is generally contingent upon a NHTSA determination as to whether or not the lamp impairs the effectiveness of other rear lamps. While certification by the vehicle manufacturer and subsequent review by NHTSA address the vehicle manufacturer's role in the safe operation of the CMV, a less complicated approach is needed to ensure that the FMCSRs are easy to understand, use, and enforce.

Explicit guidance is provided to ensure that once a vehicle manufacturer certifies that a vehicle meets all applicable FMVSSs, the motor carrier does not modify it in a manner inconsistent with FMVSS No. 108. FMCSA is not aware of any vehicle manufacturers that use amber stop lamps or tail lamps as standard equipment. Consequently, the restriction would: (1) Discourage motor carriers from asking vehicle manufacturers to install amber tail lamps and/or stop lamps on vehicles as optional equipment, and (2) prohibit the motor carrier from installing or using such devices on its commercial motor vehicles.

With regard to omissions in Table 1 in § 393.11, FMCSA amends footnotes 4 through 10 to address inconsistencies with other sections of subpart B to part 393. In addition, the agency is correcting the listing for clearance lamps and reflex reflectors and to include metric units in describing the location of the required lamps and reflectors.

The current listing for clearance lamps omits reference to footnote 8 concerning pole trailers and does not include reference to the provision in FMVSS No. 108 (S5.1.1.9) for clearance lamps on boat trailers. Under FMVSS No. 108, a boat trailer with an overall width of 2,032 mm (80 inches) or more is not required to be equipped with both front and rear clearance lamps provided an amber (to the front) and red (to the rear) clearance lamp is located at or near the midpoint on each side to indicate the extreme width of the trailer. This provision for clearance lamps on boat trailers is covered under a new footnote 17.

The listings for reflex reflectors (front side) and side marker lamps (front) are revised to address an inconsistency between § 393.11 and FMVSS No. 108 (S5.1.1.15). Under FMVSS No. 108, a trailer that is less than 1,829 mm (6 feet) in length (including the trailer tongue) need not be equipped with front side marker lamps and front side reflex reflectors. This exception is covered under a new footnote 16.

FMCSA removes the last sentence in footnote 4, which requires that the rear side marker lamps be visible in the rearview mirror. This requirement is impractical and is inconsistent with FMVSS No. 108. Section 571.108 (S5.1.1.8) incorporates by reference the Society of Automotive Engineers recommended practice Clearance, Side Marker, and Identification Lamps, (SAE J592e, July 1972) which provides photometric standards. These standards cover visibility angles of 45 degrees left to 45 degrees right and 10 degrees up to 10 degrees down. In order for the rear side marker lamps to be visible in the rearview mirrors, the left to right angles would each have to be approximately 85 degrees. Because side marker lamps which meet the minimum standards contained in SAE J592e generally are not visible in the rearview mirror, the agency amends footnote 4.

FMCSA makes editorial changes to footnotes 5 through 8 to improve the manner in which the requirements are presented. For instance, in footnote 5, the change makes it clear that converter dollies are only required to have one stop lamp and one tail lamp. The current wording, when combined with the legend at the end of § 393.11, could be construed as requiring two stop lamps and two tail lamps.

Amendments to footnotes 9 and 10 remove the requirements that projecting loads be equipped with lamps and reflectors during daylight hours. There is no apparent safety benefit for requiring lamps and reflectors on projecting loads during times when lamps are not required to be used.

Footnote 15 is revised to incorporate language consistent with certain FMVSS No. 108 options—covered under S5.3.1.1.1, S5.3.1.4, S5.3.1.6—on the locations for clearance lamps.

Section 393.17—Lamps and Reflectors, Driveaway-Towaway Operations

FMCSA amends the wording of the diagrams which illustrate the requirements of § 393.17. The diagrams incorrectly reference §§ 393.25(e) and 393.26(d); therefore, the sections are amended to reference § 393.11, which covers the color of exterior lamps and reflective devices.

Section 393.19—Requirements for Turn Signaling Systems

FMCSA revises § 393.19 to make it more consistent with FMVSS No. 108 (S5.5.5). Paragraph S5.5.5 provides a concise standard that vehicle manufacturers must meet. To ensure consistency between FMVSS No. 108 and the FMCSRs, FMCSA adopts the NHTSA standard.

Section 393.20—Clearance Lamps to Indicate Extreme Width and Height

FMCSA removes § 393.20 because the requirements for the location and color of clearance lamps are provided in Table 1 of § 393.11. The exceptions concerning the mounting of clearance lamps currently contained in § 393.20 is included under footnote 15 to Table 1. Illustrations comparable to those provided in § 393.20 are already contained in § 393.11.

Section 393.23—Lighting Devices to be Electric

FMCSA amends § 393.23 to incorporate terminology which is more consistent with current industry standards and practices. With the exception of temporary lamps used on projecting loads, lamps are required to be powered through the electrical system of the commercial motor vehicle. The title of § 393.23 is revised to read ''Power supply for lamps'' and the reference to red liquid-burning lanterns is removed as obsolete.

Section 393.24—Requirements for Headlamps and Auxiliary Road Lighting Lamps

FMCSA amends § 393.24 to provide a more straightforward presentation of the requirements for the mounting of headlamps and auxiliary lamps, and to incorporate by reference SAE standards applicable to these lamps. Currently, § 393.24 allows auxiliary and fog lamps to be used provided they meet ''the appropriate SAE standard for such lamps.'' FMCSA incorporates by

reference SAE standards J581 Auxiliary Upper Beam Lamps, July 2004, and J583 Front Fog Lamps, August 2004, for the purpose of establishing more specific performance requirements for such lamps. While auxiliary driving lamps and fog lamps are not required to be used, performance standards are being specified to ensure that the use of such devices does not decrease safety.

A new paragraph is being added to address marking of headlamps. Paragraph S7.2 of FMVSS No. 108 requires the lens of each headlamp and beam contributor manufactured on or after December 1, 1989, to be marked. FMCSA amends the FMCSRs to include this requirement under § 393.24 to ensure that commercial motor vehicles are equipped with original or replacement headlamps which meet the requirements of FMVSS No. 108.

Paragraph (d) of § 393.24, Aiming and intensity, is being revised to reference FMVSS No. 108, and SAE standards J581 and J583. One of the SAE standards currently referenced in § 393.24(d)—Electric Headlamps for Motor Vehicles—was canceled by the SAE. The other SAE standard, J579 Sealed Beam Headlamp Units for Motor Vehicles, is not necessary given the cross-reference to FMVSS No. 108 and the incorporation by reference of SAE J581 and J583.

Section 393.25—Requirements for Lamps Other Than Headlamps

To improve the clarity with which the requirements are presented, FMCSA revises § 393.25 in its entirety. Section 393.25(a) provides a concise description of the mounting requirements for lamps. Paragraph (b), entitled ''Visibility,'' provides technically sound performance standards for all required lamps. Currently, § 393.25(b) requires lamps to be mounted such that they are capable of being seen at distances up to 152.4 meters (500 feet) under clear atmospheric conditions during the period when lamps must be used as provided by § 392.30. FMCSA determined that § 392.30 duplicated State and local regulations and removed that requirement on November 23, 1994 (59 FR 60319). Also, FMCSA believes the performance criteria for lamps are effectively addressed by § 393.11 which cross-references FMVSS No. 108. Lamps must, at a minimum, meet the requirements of FMVSS No. 108 in effect on the date of manufacture of the vehicle. FMVSS No. 108 specifies the minimum and maximum photometric output values for required lamps. Vehicles not subject to FMVSS No. 108 on the date of manufacture are required to meet the visibility requirements specified in the SAE standards for incorporation by reference under § 393.25(c).

FMCSA deletes § 393.25(d), entitled ''Certification and markings,'' to make the FMCSRs consistent with FMVSS No. 108. With the exception of headlamps and beam contributors, FMVSS No. 108 does not require lamps to be marked. Manufacturers are responsible for ensuring that their products meet the applicable requirements of FMVSS No. 108, but the lamps do not need to be marked by the manufacturer to indicate that the device meets the standards. In this case, § 393.25(d) sets in-service requirements for lamps which are more stringent than the manufacturing standards set by the NHTSA. The removal of § 393.25(d) corrects this inconsistency.

FMCSA amends § 393.25(e), entitled ''Lighting devices to be steady-burning,'' and § 393.25(f), entitled ''Stop lamp operation,'' to provide more concise statements of the requirements of each. The FMCSA is allowing exceptions for the use of amber warning lamps which meet SAE J595, Directional Flashing Optical Warning Devices for Authorized Emergency, Maintenance, and Service Vehicles, January 2005, SAE J845, Optical Warning Devices for Authorized Emergency, Maintenance, and Service Vehicles, May 1997, or SAE J1318 Gaseous Discharge Warning Lamp for Authorized Emergency, Maintenance, and Service Vehicles, May 1998. All of these SAE recommended practices are incorporated by reference. Although the notice of proposed rulemaking preceding this final rule would have prohibited the use of certain Class 1 warning devices, FMCSA no longer believes such a prohibition is necessary. Several commenters indicated amber colored Class 1 warning devices are commonly used on certain commercial motor vehicles and there has been no adverse impact on safety. Adding these devices to the list of exceptions prevents confusion about the applicability of § 393.25(e).

FMCSA revises § 393.25(f) to eliminate a regulatory inconsistency between §§ 393.25(f) and 393.49 and to simplify the wording of the requirements. Currently, § 393.25(f) states that stop lamps on a towing vehicle need not be actuated when service brakes are applied to the towed vehicle(s) only. This provision is inconsistent with § 393.49, entitled ''Single valve to operate all brakes.'' When a combination vehicle includes a trailer that is required to be equipped with brakes, the braking system must be arranged so that a single valve controls the brakes on the towing unit and the towed unit. Because the FMCSRs do not allow the towing unit to operate without service brakes, and a single valve is required to operate all the brakes on the combination, the current wording of § 393.25(f) is inconsistent with § 393.49. The revision to § 393.25(f) includes language from FMVSS No. 108, S5.5.4, concerning stop lamp operation, to ensure consistency between the FMCSRs and the FMVSSs.

Section 393.26—Requirements for Reflectors

Consistent with the amendments to § 393.25, FMCSA is revising § 393.26 in its entirety. FMCSA amends § 393.26(a) concerning the mounting of reflectors, to provide guidelines comparable to those for § 393.25(a). Paragraph (b) is revised to include a requirement that reflex reflectors on projecting loads, vehicles transported in driveaway-towaway operations, converter dollies, and pole trailers meet SAE J594—Reflex Reflectors, December 2003. The SAE recommended practice is incorporated by reference.

The current requirement for certification and marking under § 393.26(c) is being removed to make the FMCSRs consistent with FMVSS No. 108. FMVSS No. 108 does not require that reflectors be marked by the manufacturer to indicate that the device meets the standards. Paragraph (c) would then be used to incorporate American Society for Testing and Materials (ASTM) D4956–04, Standard Specification for Retroreflective Sheeting for Traffic Control, as the minimum standard for reflective tape used in lieu of reflex reflectors. Retroreflective sheeting that conforms to the ASTM standard would generally meet the requirements of FMVSS No. 108, S5.1.1.4, concerning the use of reflective tape in lieu of reflex reflectors. The performance of the reflective sheeting as installed on the vehicle must meet the visibility requirements under SAE J594, Reflex Reflectors, December 2003.

Paragraph (d) is being revised to more clearly state that reflective surfaces or materials other than those required by § 393.11 may be used in addition to, but not in lieu of, the required reflective devices.

Sections 393.27, 393.28, 393.29, 393.31, 393.32, 393.33—Regulations on Electrical Wiring

FMCSA incorporates by reference in § 393.28, SAE J1292—Automobile, Truck, Truck-Tractor, Trailer, and Motor Coach Wiring, October 1981, which covers basic aspects of performance, operating integrity, and service. Section

393.28 is being renamed ''Wiring systems.'' The guidelines contained in J1292 effectively cover the requirements currently addressed by § 393.27, Wiring specifications; § 393.28, Wiring to be protected; § 393.29, Grounds; § 393.31, Overload protective devices; § 393.32, Detachable electrical connections; and § 393.33, Wiring, installation. Among the specific topics addressed by the SAE standard are insulated cables; conductor termination; conductor splicing; conductor grouping; wire assembly construction; wire assembly installation and protection; and wiring overload protective devices. The SAE standard for incorporation provides a concise presentation of those aspects of commercial vehicle electrical systems that should be addressed by the FMCSRs. Sections 393.27, 393.29, 393.31, 393.32 and 393.33 are being removed.

The incorporation by reference removes certain design restrictive language from § 393.28(a)(5) concerning terminals or splices above the fuel tank. FHWA received petitions from the Ford Motor Company, Freightliner Corporation, and the Motor Vehicle Manufacturers Association (now the American Motor Vehicle Manufacturers Association) requesting an amendment to § 393.28(a)(5), which was adopted in the December 7, 1988, final rule (53 FR 49380). The petitions are available for review in the docket. Each of the petitions pointed out that use of the word ''terminal'' combined with ''above'' created ambiguity with respect to the proximity of electrical wiring to the fuel tanks. Electrical terminals performing various functions, from battery terminals (Ford Motor Co.) to relays and switches (Freightliner Corporation), are mounted above the fuel tanks. In some instances these switches or relays with terminals are mounted 203 mm (8 inches) or more above the fuel tank or on the frame rail (in the case of Freightliner and Daimler-Benz power units). In the case of Ford power units, the fuel tank is specifically designed for battery installation.

The notice of proposed rulemaking that preceded the final rule would have prohibited wiring from being adjacent to any part of the fuel system (52 FR 5892, February 26, 1987). The wording in the final rule was less restrictive than the proposed language and focused specifically on terminals and splices. FMCSA agrees with the petitioners, however, that § 393.28(a)(5) is still unnecessarily restrictive. FMCSA's decision to incorporate by reference criteria that effectively and safely address the issue of wiring around the fuel system of commercial motor vehicles resolves the petitioners' concerns.

FMCSA includes an exception to the incorporation by reference for jumper cable plugs and receptacles, and circuit protection requirements for trailers. Jumper plugs and receptacles need not conform to SAE J560 Primary and Auxiliary Seven Conductor Electrical Connector for Truck-Trailer Jumper Cable, which provides the minimum requirements for primary and auxiliary jumper cable plugs and receptacles for the truck-trailer and converter dolly jumper cable systems. TTMA indicated in its comments most trailers are equipped with an SAE J560 receptacle, but they may also have a modified International Standards Organization (ISO) 3731 receptacle, while others may have a 13-conductor Cole-Hersee receptacle. FMCSA agrees with TTMA and believes safety would not be compromised by allowing flexibility.

Subpart C—Brakes

Section 393.40—Required Brake Systems

FMCSA revises § 393.40 in its entirety to present more clearly the requirements contained therein. Generally, vehicles that have been maintained to continue compliance which meet the manufacturing standards applicable at the time of the vehicle is built, will not be affected by the revisions. Hydraulic braked and air braked vehicles are required to meet the requirements of FMVSS Nos. 105 and 121, respectively, in effect at the time of manufacture. The service, parking, and emergency brake requirements for vehicles which were not subject to either of the FMVSS brake regulations is provided by references to other applicable sections in subpart C and by the requirements currently found under § 393.40(b)(2) and (c).

With regard to FMVSS No. 105, FMCSA notes that between September 1, 1975, and October 12, 1976, the standard was applicable to trucks and buses. However, from October 12, 1976, to September 1, 1983, it covered only passenger cars and school buses. From 1983 to the present, the standard has applied to trucks and buses. For the purposes of § 393.40, FMCSA will use September 2, 1983, as the date for determining which hydraulic-braked vehicles must be maintained to meet certain requirements under FMVSS No. 105.

There could be some benefit in requiring vehicles manufactured between September 1975 and October 1976 to meet the requirements of FMVSS No. 105 in effect on the date of manufacture. However, the number of these older vehicles still in operation is relatively small, and the brake requirements under part 393 to which these vehicles would continue to be subject should ensure safety of operation.

Section 393.41—Parking Brake System

The December 7, 1988, final rule on part 393 was intended to make the parking brake requirements of the FMCSRs consistent with the parking brake requirements of FMVSS Nos. 105 and 121. FMCSA has since determined that additional changes are necessary. The current language only covers vehicles with air brakes manufactured on or after March 7, 1990, which are subject to FMVSS No. 121. The wording implies that all non-air braked vehicles, irrespective of the date of manufacture, and air braked motor vehicles manufactured prior to that date are not required to be equipped with parking brakes.

Prior to the 1988 amendment, § 393.41 required that every singly driven motor vehicle and every combination of motor vehicles shall at all times be equipped with a parking brake system adequate to hold the vehicle or combination on any grade on which it is operated under any condition of loading on a surface free from ice or snow. FMCSA considers the parking brake requirements in effect prior to the 1988 amendment to provide a more straightforward standard that is easier for the industry and State officials to understand.

FMCSA revises § 393.41 to state clearly that every self-propelled commercial motor vehicle (*i.e.*, trucks, truck-tractors and buses) and every combination of commercial motor vehicles must be equipped with a parking brake system adequate to hold the vehicle or combination on any grade on which it is to be parked and under any condition of loading, on a surface free from ice or snow. Commercial motor vehicles which were subject to the parking brake requirements of FMVSS Nos. 105 or 121 at the time of manufacture are required to maintain the parking brake systems to meet those standards. Motor vehicles which were not subject to either of the FMVSS parking brake requirements must meet the requirements currently found at § 393.41(b) and (c).

The revisions to § 393.41 also address a petition for rulemaking from International Transquip Industries, Incorporated (ITI) asking FMCSA to clarify the applicable requirements for air-applied, mechanically-held, parking brakes. The petition is available for review in the docket. The ITI

manufactures an air brake system which includes an air-applied, mechanically-held parking brake. The parking brake application is initiated by exhausting air off the supply line. When the control valve senses the supply line pressure drop, it ports air from either the primary or secondary reservoirs at a controlled pressure to the brake chambers resulting in an application of the brakes. The same supply line pressure signal activates a synchronizing device which engages the mechanical pistons immediately after the brakes have been applied.

Section 393.41(b) requires that the parking brake be capable of being applied at all times by either the driver's muscular effort, or by spring action, or by other energy. In the case of ''other energy,'' the accumulation of such energy must be ''isolated from any common source and used exclusively for the operation of the parking brake.'' This wording has been in effect since 1962 and could be construed as requiring a separate reservoir for air-applied, mechanically-held parking brakes. Such a requirement is inconsistent with FMVSS No. 121.

On August 9, 1979, NHTSA amended FMVSS No. 121 to allow the application of the parking brakes by means of service brake air if: (1) The application could be made when a failure exists in the service brake system, and (2) the parking brake is held in the applied position by mechanical means (44 FR 46850). Prior to this amendment, an air-applied, mechanically-held parking brake was required to be applied by a separate reservoir. The revision of § 393.41(b) includes a cross-reference to the parking brake requirements of FMVSS No. 121, thus eliminating any inconsistencies.

For air braked vehicles which were not subject to FMVSS No. 121 at the time of manufacture, § 393.41 would continue to allow the use of air-applied, mechanically-held parking brake systems applied by a separate reservoir. The motor carrier would have the option of modifying the brake system to meet FMVSS No. 121. Air-applied, mechanically-held parking brakes which are designed to operate without a separate reservoir could be used if the conditions specified in FMVSS No. 121 are met.

Section 393.42—Brakes Required on All Wheels

The agency is revising § 393.42(b)(3) to clarify the exceptions for lightweight trailers and to address brake requirements on housemoving dollies, three-axle dollies steered by a co-driver, and similar dollies and trailers used for transporting extremely large and heavy loads at low speeds.

As part of the January 27, 1987, final rule on front wheel brakes, FMCSA amended the exemption for brakes on lightweight trailers (52 FR 2801). Prior to the amendment, full trailers, semi-trailers, or pole trailers with a gross weight of less than 1,360 kg (3,000 pounds) were not required to have brakes provided the weight of the trailer did not exceed 40 percent of the weight of the towing unit. The 1987 amendment replaced the term ''gross weight'' with ''GVWR'' or gross vehicle weight rating.

While the change to GVWR has certain benefits in terms of applying the regulation to situations in which it is not convenient to weigh the trailer, the amendment did not adequately address concerns about stability and control during braking for trailers that have a GVWR greater than 1,361 kg (3,000 pounds), but an actual or gross weight less than 1,361 kg when lightly loaded. Under certain circumstances, trailers of this weight range may be overbraked resulting in wheel lockup or skidding when the trailer is lightly loaded. FMCSA believes § 393.42 should be amended to make reference to the gross weight. Trailers covered under the current reference to GVWR are covered under the revised exemption provided the vehicle is not loaded beyond the manufacturer's weight rating. Trailers with a GVWR in excess of 1,361 kg (3,000 pounds) would only be covered by the exemption on those occasions when the gross weight of the trailer is 1,361 kg (3,000 pounds) or less. The language would help to provide a performance-based criterion that is easier to understand and enforce.

Although the exemption concerning lightweight trailers never specifically addressed converter dollies, the issue of overbraking on unladen converter dollies has been the subject of several requests for interpretation of § 393.42(b). Converter dollies are generally designed to carry loads of approximately 9,072 kg (20,000 pounds) with a brake system sized for the fully loaded condition. While the GVWR is greater than 1,360 kg (3,000 pounds) the unladen weight is usually 1,360 kg or less. When towed behind another motor vehicle, the unladen converter dolly is overbraked, with the application of the service brakes causing wheel lock-up or skidding.

In 1990, NHTSA's Vehicle Research and Test Center (VRTC) conducted tests to evaluate the braking and stability of a bobtail truck tractor towing an unladen converter dolly. Both the truck tractor and the converter dolly were equipped with ABS that could be deactivated. The truck tractor was also equipped with an automatic front-axle limiting valve (ALV) and a bobtail proportioning valve (BPV) that could each be deactivated.

The tests included 97 km/hour (60 mph) straight-lane braking, 48 km/hour (30 mph) braking in a 152.4 meters (500 ft) radius curve, and 56 km/hour (35 mph) straight-lane braking. The 97 km/hour straight-line braking tests were performed on dry concrete (high coefficient of friction surface). The braking-in-a-curve tests were performed on wet Jennite (low coefficient of friction surface). The 56 km/hour straight-lane braking was performed on wet polished concrete. The tests used ''driver best effort'' for the cases in which the ABS was turned off, and full-treadle brake applications with the ABS turned on.

When the brakes on the converter dolly were not connected, stopping distances were increased by 12 to 30 percent over those for the bobtail tractor without the converter dolly. Also, the absence of braking on the converter dolly made locking the drive axles of the tractor easier which caused the combination to jackknife. The absence of braking on the dolly did, however, prevent locking the wheels and subsequent swing-out of the dolly.

When the brakes on the converter dolly were connected and the tractor did not have a BPV system, stopping distances on the two wet surfaces were 10 to 25 percent shorter than those with the bobtail tractor alone. On the dry surface the stopping distances were slightly longer with the dolly brakes operational. When the tractor was equipped with a BPV system and the dolly brakes were connected, stopping distances were longer on all of the test surfaces and in one case by as much as 60 percent.

There were no stopping distance decreases observed for the tests performed on the dry concrete when the converter dolly brakes were connected. However, the increases were significantly less than those observed when the converter dolly brakes were disconnected.

While having operable brakes on the unladen converter dolly decreased stopping distances in certain cases, two disadvantages were observed. If the tractor is equipped with a BPV, hooking up the supply (emergency) line to release the parking brakes on the dolly will deactivate the BPV and activate the ALV. This is true even if the control (service) line is not hooked up to the dolly. This practice significantly degrades braking performance,

increasing both the stopping distance and the chance of a jackknife of the combination vehicle. The other disadvantage is that the converter dolly can swing out if the wheels lock up.

Stability and control during braking is an important consideration in determining braking requirements for commercial motor vehicles. While stopping distances for a bobtail tractor towing an unladen converter dolly could be improved in some situations by requiring operable dolly brakes, they could be significantly degraded in others. When consideration is given to the possibility of the converter dolly swinging out as a result of wheel lock up, the FMCSA believes the FMCSRs should be amended to include an exception to the requirement for operable brakes on unladen converter dollies.

Although regulatory guidance published by the FMCSA on November 17, 1993 (58 FR 60734) stated that § 393.42(b)(3) is applicable to unladen converter dollies, FMCSA is creating an exception for converter dollies under § 393.48, Brakes to be operative. Converter dollies are always equipped with brakes. Nevertheless, the air lines for the service brakes are sometimes disconnected from the towing vehicle when the converter dolly is unladen. Therefore, an exception to § 393.42 (the requirement that the converter dolly be equipped with brakes) is not necessary. FMCSA is addressing the problem by amending § 393.48 to provide an exception to the requirement that the brakes be operable when the converter dolly is unladen.

FMCSA notes that with NHTSA's March 10, 1995 (60 FR 13216) final rule on antilock braking systems (ABS), the long-term need for this exception for unladen converter dollies will diminish. An ABS-equipped converter dolly will not have the stability and control problems observed with unladen converter dollies that are not equipped with ABS. Therefore, converter dollies manufactured on or after March 1, 1998, the effective date of the NHTSA requirement for ABS on converter dollies, are not covered by the exception.

On the subject of housemoving dollies and similar vehicles designed to transport extremely large and/or heavy loads, FMCSA is providing an exemption to the requirement for brakes on all wheels based on the specialized circumstances under which these motor vehicles are used on public roads. Housemoving dollies are only used on public roads when transporting houses. Semitrailers are used to transport the dollies between jobs. When the dollies are used to transport houses, the average speed is less than 32 km/hour (20 mph). Also, escort vehicles are generally used when the houses are being moved.

Similarly, specialized trailers and dollies used to transport industrial furnaces, reactors and other heavy cargo are operated at speeds less than 32 km/hour (20 mph) and have escort vehicles. FMCSA does not believe that safety is compromised by providing an exception to the requirement for brakes on all wheels, provided the brakes on the towing unit are capable of stopping the combination within 12.2 meters (40 feet) from the speed at which the vehicle is being operated or 32 km/hour (20 mph), whichever is less.

The exemption to the requirement for brakes on all wheels also covers the steering axles of three-axle dollies which are steered by a co-driver (tillerman) at the rear. These dollies are often used to transport concrete or steel beams used for bridges or other structures. The loads are often in excess of 30.5 meters (100 feet) in length. The front of the load is secured to the power unit with the rear of the load secured to the three-axle steerable dolly. A co-driver, seated in the dolly, operates the steering controls to help maneuver the combination vehicle. Although the dolly is equipped with brakes via air lines from the towing unit, the steering axle is typically overbraked making it difficult for the co-driver to steer the dolly. When the dolly is loaded, the steering axle weight rarely exceeds 3,402 kg (7,500 pounds).

FMCSA does not believe that an exemption to the requirement for steering axle brakes on these vehicles would degrade safety. The vehicles transport unusually long loads, often require special permits, and have to operate at reduced speeds. Therefore, the agency is exempting the steering axles of such vehicles from the requirement of § 393.42(a) that all wheels be equipped with brakes provided the combination of vehicles can meet the stopping distance requirements under § 393.52.

Section 393.43—Breakaway and Emergency Braking

FMCSA revises § 393.43(a) to include better guidance on the performance requirements for towing vehicle brake protection systems. An explicit requirement that the tractor protection valve or similar device operate when the air pressure on the towing vehicle is between 138 kilopascals (kPa) and 310 kPa (20 pounds per square inch (psi) and 45 psi) is added. This criterion has been used for many years during roadside inspections and its inclusion in § 393.43(a) should not create a problem for motor carriers.

FMCSA revises § 393.43(b) to codify its interpretation of the number of trailer brakes required to apply automatically upon breakaway from the towing vehicle. On November 17, 1993, the FMCSA published regulatory guidance which indicated that all brakes must be applied upon breakaway (58 FR 60734). This is consistent with the FMCSA's November 23, 1977, interpretation (42 FR 60078). Because FMVSS No. 121 does not specify the number of trailer brakes that must apply automatically, it is possible that some trailers may be able to meet those performance requirements without having all the brakes apply upon breakaway. To ensure the enforceability of the breakaway requirements and consistency between § 393.43 and the FMVSSs, FMCSA amends the regulation to specify that all brakes must apply automatically, but the requirement is not applicable to trailers with more than two axles. Trailers with more than two axles typically would not have brakes that apply automatically upon breakaway, on each axle.

Sections 393.45 and 393.46—Brake Tubing and Hose

FMCSA revises § 393.45 to address all aspects of brake tubing and hoses, including connections, and to remove § 393.46. Currently, § 393.45 requires that brake tubing and brake hose be designed and constructed in a manner that ensures proper, adequate, and continued functioning of the tubing or hose. The tubing or hose must be long and flexible enough to accommodate without damage all normal motions of the parts to which they are attached; be suitably secured against chaffing, kinking, or other mechanical damage; and be installed in a manner that ensures proper continued functioning and prevents contact with the vehicle's exhaust system. Section 393.45 cross-references FMVSS No. 106 as well as several SAE standards.

FMCSA retains most of the current language regarding the installation of the brake hoses and the cross-reference to FMVSS No. 106. The current language regarding the design, material, and construction (§§ 393.45(a) and (b)) is removed because the cross-reference to FMVSS No. 106 addresses manufacturing aspects of brake tubing and hoses.

Also, FMCSA eliminates all references to SAE standards on brake hoses, including SAE J844—Nonmetallic Air Brake System Tubing. Based upon its review of NHTSA's December 20, 2004, final rule

concerning FMVSS No. 106, FMCSA believes there is no readily apparent benefit to incorporating by reference any of the SAE standards. Because brake hose manufacturers are required to meet all applicable requirements under FMVSS No. 106, the SAE references are unnecessary.

FMCSA removes § 393.45(d) because it does not impose any specific requirements on motor carriers. As written, the paragraph serves as a suggestion or recommendation on the use of metallic and nonmetallic brake tubing. Also, given the performance-based requirements for brake hose/tubing installation being adopted through this final rule, the current language in § 393.45(d) is no longer necessary.

The changes to § 393.45 address a petition for rulemaking from Imperial Eastman, a brake tubing/hose manufacturer. The petition is available for review in the docket. Imperial Eastman believes that certain coiled nonmetallic air brake tubing which did not meet FMVSS No. 106 was introduced into the market place as a direct result of § 393.45. Imperial Eastman believes that prior to the December 7, 1988, final rule, § 393.45 was clear and that the 1988 revision has been interpreted by some as not applying the SAE J844 requirements to nonmetallic air brake tubing. FMCSA believes the cross-reference to FMVSS No. 106 makes it clear that any brake hose, irrespective of the material from which it is manufactured, that meets the requirements of FMVSS No. 106 would satisfy § 393.45.

On the subject of brake tubing and hose connections, the revised wording of § 393.45 requires that all assemblies and end fittings for air, vacuum, or hydraulic braking systems be installed so as to ensure an attachment free of leaks, constrictions or other conditions which would adversely affect the performance of the brake system. Brake tubing and hose assemblies and end fittings are required to meet all applicable requirements under FMVSS No. 106, as is currently the case. These requirements, currently covered under § 393.46, are covered under § 393.45(e). Because the language for § 393.45 includes requirements concerning installation, connections and attachments, § 393.46 is removed.

Section 393.47—Brake Lining

Section 393.47 is revised to cover brake chambers, slack adjusters, linings and pads, drums and rotors. Brake components are required to be constructed, installed, and maintained to prevent excessive fading and grabbing. The means of attachment and physical characteristics must provide for safe and reliable stopping of the commercial motor vehicle. To make the requirements of part 393 consistent with the periodic inspection requirements under appendix G to subchapter B, § 393.47 is amended to require that the service brake chambers and spring brake chambers on each end of an axle be the same size. The effective length of the slack adjuster on each end of an axle is required to be the same. In addition, minimum requirements on the thickness of linings or pads are specified.

With regard to linings and pads, the criteria differ from appendix G. Currently, appendix G does not adequately address the issue of brake lining thickness on the steering axles of certain vehicles (typically those with a GVWR between 4,536 and 14,969 kg (10,001 and 33,000 pounds)). This issue was brought to the attention of the FMCSA by the American Trucking Associations (ATA). The ATA discussed front brake lining thickness in a petition for reconsideration of the final rule on periodic inspection. The petition is available for review in the docket. In its petition, the ATA stated:

> There are two configurations of brake lining used on steering axle brakes: blocks (sometimes called pads) and strips. Block lining is installed in four segments on the two shoes of each front brake. Such lining is typically well over ¼ inch thick when new and the ¼ inch annual inspection criteria is correct for it. Strip lining, as the name implies, consists of a continuous band of lining installed in two segments, one on each shoe of an individual front brake. Certain types of strip lining are only slightly over ¼ inch thick when new. Therefore a ¼ inch annual inspection criteria is inappropriate.

The roadside inspection guidelines used by Federal and State inspectors have the following criteria to determine if the linings or pads of the steering axle of any power unit are worn to the point of creating an imminent hazard:

> Lining with a thickness less than 3/16 inch for a shoe with a continuous strip of lining or ¼ inch for a shoe with two pads for drum brakes or to wear indicator if lining is so marked, or less than ⅛ inch for air disc brakes, and 1/16 inch or less for hydraulic disc, drum and electric brakes.

FMCSA believes these guidelines should be added to § 393.47 to help motor carriers identify steering axle brake linings and pads that are excessively worn. FMCSA will consider a separate rulemaking to amend appendix G to subchapter B, concerning the periodic inspection critieria. To address non-steering axle brake lining/pads, FMCSA incorporates into § 393.47 the same criteria currently found in appendix G.

Brake actuator readjustment limits are also being specified under § 393.47. The pushrod travel for clamp and roto-chamber type actuators is required to be less than 80 percent of the rated strokes listed in SAE J1817—Long Stroke Air Brake Actuator Marking, July 2001, or 80 percent of the rated stroke marked on the brake chamber by the chamber manufacturer, or the readjustment limit marked on the brake chamber by the chamber manufacturer. The pushrod travel for Type 16 and 20 long stroke clamp type brake actuators (which are not covered under SAE J1817 but for which there are manufacturers' recommendations) is required to be less than 51 mm (2 inches), or 80 percent of the rated stroke marked on the brake chamber by the chamber manufacturer, or the readjustment limit marked on the brake chamber by the chamber manufacturer. For wedge brakes, the movement of the scribe mark on the lining could not exceed 1.6 mm (1/16 inch). With regard to brake drums and rotors, the thickness of the drums or rotors must meet the limits established by the brake drum or rotor manufacturer.

Section 393.48—Brakes To Be Operative

FMCSA revises § 393.48(a) and (b) to make the requirements easier to understand. The revisions provide a more concise presentation of the requirements.

With regard to paragraph (c), the FMCSA explicitly addresses the issue of unladen converter dollies and lift axles. Braking on unladen converter dollies is covered extensively in discussion of the changes to § 393.42. Unladen converter dollies with a gross weight of 1,361 kg (3,000 lbs) or less would not be required to have operable brakes. Brakes on lift axles would not be required to be capable of operation while the lift axle is raised. However, brakes on lift axles must be operable whenever the lift axle is lowered and the tires contact the roadway. Therefore, if an enforcement official instructs a driver to lower the lift axle to the ground during an inspection, the driver is required to demonstrate that the brakes on that axle are operable. The revision would essentially codify regulatory guidance on these issues.

In addition, the issue of housemoving dollies, three-axle steerable dollies, and similar motor vehicles used to transport extremely heavy loads is addressed to ensure consistency between the revisions to § 393.42 and § 393.48.

Section 393.50—Reservoirs Required

Section 393.50 is revised to provide a simpler and more concise presentation

of the reservoir requirements and to cross-reference FMVSS No. 121. Each air braked truck, truck-tractor, and bus manufactured on or after March 1, 1975, would at a minimum be required to meet FMVSS No. 121, S5.1.2, in effect on the date of manufacture. Trailers manufactured on or after January 1, 1975, must meet the requirements of FMVSS No. 121, S5.2.1, in effect on the date of manufacture. Air braked vehicles manufactured prior to these dates, and vacuum braked vehicles would continue to meet the requirements currently found at § 393.50.

FMCSA believes the revision is necessary to indicate clearly that a vehicle which is maintained to meet the reservoir requirements of FMVSS No. 121 in effect on the date of manufacture would meet the requirements under part 393. This is particularly important given the NHTSA's January 12, 1995, final rule on FMVSS No. 121 (60 FR 2892). NHTSA amended the reservoir requirements to facilitate the introduction of long-stroke brake chambers. For vehicles manufactured on or after February 13, 1995, the method for calculating the minimum air reservoir capacity is based on either the rated volume of the brake chambers or the volume of the brake chambers at the maximum travel of the brake pistons or push rods, whichever is less.

Section 393.51—Warning Devices and Gauges

FMCSA revises § 393.51 to provide better guidance on the applicability of the warning device requirements to older commercial motor vehicles. Hydraulic braked vehicles manufactured on or after September 1, 1975, the effective date of FMVSS No. 105, are required to meet the brake system indicator lamp requirements of FMVSS No. 571.105 (S5.3) applicable to the vehicle on the date of manufacture. Vehicles manufactured before September 1, 1975, or to which FMVSS No. 571.105 was not applicable on the date of manufacture, must have a warning signal which operates before or upon application of the brakes in the event of a hydraulic-type complete failure of a partial system. The language would retain all current requirements but add the effective date for FMVSS No. 105 and identify the specific paragraph within FMVSS No. 105 that covers warning devices.

In addition, FMCSA inserts a note into § 393.51 to address the warning device requirements for hydraulic braked trucks and buses manufactured between October 12, 1976, and September 1, 1983. During this period, FMVSS No. 105 was only applicable to passenger cars and school buses. Consequently, manufacturers of hydraulic braked trucks and buses were not required to equip those vehicles with a warning device to indicate certain types of brake failure. However, under the FMCSRs, motor carriers are responsible for having warning devices on these vehicles. Because FMVSS No. 105 was not applicable to these vehicles at the time of manufacture, the requirements of § 393.51 are not in conflict with the NHTSA standard.

FHWA received numerous requests for interpretation from motor carriers with vehicles manufactured during this period and not equipped with a warning device. Through regulatory guidance, FHWA indicated that these vehicles are required to be equipped with warning devices because § 393.51(b)(2)—which covers hydraulic braked vehicles to which FMVSS No. 105 was not applicable at the time of manufacture—was in effect prior to October 12, 1976, and has remained in effect ever since. Therefore, the agency is codifying the regulatory guidance concerning warning devices on these vehicles.

On the subject of air braked vehicles, FMCSA revises § 393.51(c) to include reference to the March 1, 1975, effective date of FMVSS No. 121 for power units. The specific paragraphs within FMVSS No. 121 which address the pressure gauge and warning signal requirements are included. Vehicles which are not required to meet the requirements of FMVSS No. 121 must be equipped with a pressure gauge, visible to a person seated in the normal driving position, which indicates the air pressure (in kilopascals (kPa) or pounds per square inch (psi)) available for braking; and, a warning signal that is audible or visible to a person in the normal driving position and provides a continuous warning to the driver whenever the air pressure in the service reservoir system is at 379 kPa (55 psi) and below, or one-half of the compressor governor cutout pressure, whichever is less.

With regard to commercial motor vehicles with hydraulic brakes applied or assisted by air or vacuum, FMCSA revises § 393.51(e) to make it applicable only to hydraulic braked vehicles which were not subject to the FMVSS No. 105 at the time of manufacture. The amendment eliminates the inconsistency between the warning device requirements of FMVSS No. 105 and § 393.51(e). Currently, § 393.51(e) requires a warning device for the hydraulic portion of the brake system as well as a warning device for the air or vacuum portion of the brake system, irrespective of the applicability of FMVSS No. 105. However, FMVSS No. 105 does not require a warning device for the air or vacuum portion of these hydraulic brake systems. FMCSA believes the § 393.51(b) cross-reference to FMVSS No. 105 provides effective requirements for warning devices on hydraulic braked vehicles subject to that standard at the time of manufacture. A requirement for an additional warning device for the air or hydraulic portion of the brake system of these vehicles is not necessary.

For air-assisted or vacuum-assisted hydraulic braked vehicles which were not subject to FMVSS No. 105, FMCSA is retaining the current requirements for a warning device for the hydraulic portion of the brake system and a warning device for the air or vacuum portion of the brake system. Section 393.51(e) would continue to require that the hydraulic portion of the vehicle meet the requirements of § 393.51(b) and that the air or vacuum portion of the brake system meet the applicable requirements of paragraphs (c) or (d). FMCSA notes that commercial motor vehicles equipped with air-over-hydraulic brake systems are classified as air-braked vehicles and, as such, are required to meet the applicable warning device and pressure gauge requirements for air braked vehicles.

Finally, FMCSA reinstates one of the exemptions removed by the December 7, 1988, final rule on part 393. The 1988 rule revised § 393.51 by removing paragraph (g), which contained two exemptions considered obsolete with the adoption of the definition of a commercial motor vehicle. The exemptions covered buses with a seating capacity of 10 persons or less (including the driver), and two-axle property-carrying vehicles that were either manufactured before July 1, 1973, or had a GVWR of 4,536 kg (10,000 pounds) or less.

From a practical standpoint, all two-axle property-carrying vehicles with a GVWR of 4,536 kg or less, and equipped with air, vacuum, or air-assisted or vacuum-assisted hydraulic brake systems were exempted irrespective of the date of manufacture. Generally, these vehicles are only subject to the FMCSRs when transporting hazardous materials in a quantity that requires placards on the vehicle or when towing another vehicle such that the gross combination weight rating exceeds 4,536 kg (10,000 pounds). Therefore, the exemption for certain two-axle property-carrying vehicles is being reinstated, but is limited to two-axle property-carrying vehicles manufactured before July 1, 1973.

Because the group of vehicles covered by the exemption represent a small

segment of the total population of vehicles that fall under the FMCSA's jurisdiction, and these vehicles have either reached, or will soon reach the end of their service life and were previously exempted, the reinstatement will not reduce safety on the highways. FMCSA is not reinstating the exemption for buses with a seating capacity of 10 persons or less because these vehicles are generally not subject to the FMCSRs.

Subpart D—Glazing and Window Construction

Sections 393.61, 393.62, 393.63, 393.92—Window Construction and Emergency Exits

Section 393.61 is being revised to cover only truck and truck tractor window construction. Window construction for buses (or emergency exits) is covered under § 393.62. The prohibitions on window obstructions currently found at § 393.62 is addressed along with the emergency exits requirements. The provisions of § 393.63 (Windows, markings) and § 393.92 (Buses, marking emergency doors) is covered under the revised rule on emergency exits. Sections 393.63 and 393.92 are removed.

In § 393.61, FMCSA removes the reference to an ellipse in determining the minimum area of a truck or truck-tractor window. The rectangular dimensions currently provided appear to be sufficient. Also, the rectangular dimensions provide the most practical and enforceable criteria.

As for emergency exits on buses, FMCSA revises its cross-references to FMVSS No. 217 so that motor carriers and enforcement officials will have better guidance on the applicability of NHTSA's amendments to buses subject to the FMCSRs. On November 2, 1992, FMVSS No. 217 was amended to require that the minimum emergency exit space on school buses be based upon the seating capacity of each bus (57 FR 49413). NHTSA's final rule took effect September 1, 1994. Further, in a separate notice, NHTSA allowed non-school buses to meet either the non-school bus requirements or the new upgraded school bus requirements (57 FR 49444, November 2, 1992). NHTSA issued the final rule on May 9, 1995 (60 FR 24562).

FMCSA reviewed the NHTSA rulemakings and determined that the FMCSRs should be amended to address the November 2, 1992, and May 9, 1995, final rules. FMCSA is allowing the upgraded school bus emergency exit requirements on buses subject to the FMCSRs so that motor carriers are afforded the same flexibility given to manufacturers under FMVSS No. 217.

Buses manufactured on or after September 1, 1994, and having a GVWR of 4,536 kg (10,000 pounds) or less must meet the emergency exit requirements of FMVSS No. 217 (S5.2.2.3) in effect on the date of manufacture. Generally, these buses would only be subject to the FMCSRs when towing a trailer. If the gross combination weight rating (GCWR) for the bus and trailer is greater than 4,536 kg, and the combination is operated in interstate commerce, the emergency exit requirements are applicable. An example is a small bus operated by a private motor carrier of passengers when towing a trailer.

For buses with a GVWR of more than 4,536 kg (10,000 pounds), FMCSA is requiring that they have emergency exits which meet the applicable emergency exit requirements of FMVSS No. 217, S5.2.2 (the non-school bus requirements) or S5.2.3 (the upgraded school bus requirements) in effect on the date of manufacture. The provision for buses with a GVWR greater than 4,536 kg incorporates NHTSA's final rules.

For buses manufactured on or after September 1, 1973, but before September 1, 1994, the FMCSA is requiring that each bus (including a school bus used in interstate commerce for non-school bus operations) with a GVWR of more than 4,536 kg (10,000 pounds) meet the requirements of FMVSS No. 217, S5.2.2, in effect on the date of manufacture. Buses with a GVWR of 4,536 kg (10,000 pounds) or less must meet the requirements of FMVSS No. 217, S5.2.2.3, in effect on the date of manufacture.

Section 393.62 is revised to include a paragraph on emergency exit identification. Each bus and each school bus used in interstate commerce for non-school bus operations, manufactured on or after September 1, 1973, must meet the applicable emergency exit identification or marking requirements of FMVSS No. 217, S5.5, in effect on the date of manufacture. Buses (including school buses used in interstate commerce for non-school bus operations) must be marked ''Emergency Exit'' or ''Emergency Door'' followed by concise operating instructions describing each motion necessary to unlatch or open the exit located within 152 mm (6 inches) of the release mechanism.

The emergency exit requirements for buses manufactured before September 1, 1973, is revised to provide requirements which are easier to understand and enforce. These buses must have either laminated safety glass or push-out windows. The regulation would more clearly state that laminated safety glass would, at a minimum, be required to meet Test No. 25, Egress, of the American National Standards Institute (ANSI), American National Standard for Safety Glazing Materials for Glazing Motor Vehicles and Motor Vehicle Equipment Operating on Land Highways-Safety Standard, ANSI/SAE Z26.1/1996 (ANSI approved August 1997). FMCSA incorporates the ANSI document by reference.

With regard to push-out windows, the requirements are revised to adopt certain provisions of FMVSS No. 217. Each push-out window is required to be releasable by operating no more than two mechanisms and allow manual release of the exit by a single occupant. For mechanisms which require rotary or straight (parallel to the undisturbed exit surface) motions to operate the exit, the amount of force required to release the exit could not exceed 89 Newtons (20 pounds). For exits which require a straight motion perpendicular to the undisturbed exit surface, the amount of force could not exceed 267 Newtons (60 pounds).

FMCSA believes the force requirements will not present a problem for motor carriers and that older buses with emergency exits which cannot meet these basic performance requirements should have the emergency exit release mechanisms replaced. This should not be construed as an attempt to require that the entire emergency exit be replaced, only release mechanisms which do not meet the criteria.

Lastly, FMCSA codifies its regulatory guidance on buses used for the transportation of prisoners. An exception to the emergency exit requirements is included for buses used exclusively for the transportation of prisoners.

Subpart E—Fuel Systems

Section 393.67—Liquid Fuel Tanks

FMCSA revises paragraph (a) to indicate that the fuel tank requirements apply not only to tanks containing or supplying fuel for the operation of commercial motor vehicles, but includes tanks needed for the operation of auxiliary equipment installed on, or used in connection with commercial motor vehicles. Section 393.65(a), the requirements for fuel systems, contains similar language so FMCSA amends the applicability statement of § 393.67 to be consistent with § 393.65.

Also, FMCSA revises § 393.67(d) and (e) to include the information currently presented in a footnote to the section.

As indicated by the footnote, the fuel tank tests specified by § 393.67 are a measure of performance only. Alternative procedures which assure that the fuel tank meets the performance criteria may be used. However, this footnote is often overlooked. Including the text of the footnote in paragraphs (d) and (e) would help to prevent further confusion.

In addition, FMCSA corrects an error in § 393.67(f)(2). Currently, each liquid fuel tank manufactured on or after July 1, 1988, must be marked with the manufacturer's name. The July 1, 1988, date is incorrect. This date precedes the publication of the December 7, 1988, final rule that established the July 1, 1988 compliance date. The last number in the year should have been a ''9'' instead of an ''8.'' FMCSA intended the date to read July 1, 1989, approximately 120 days after the March 7, 1989, effective date of the December 7, 1988, final rule on part 393.

Section 393.68—Compressed Natural Gas Fuel Containers

FMCSA creates a new section to address requirements for compressed natural gas (CNG) fuel containers. Section 393.68 cross-references the NHTSA's new requirements for CNG containers, FMVSS No. 304, Compressed Natural Gas Fuel Container Integrity (September 26, 1994, 59 FR 49010). Under FMVSS No. 304, which is applicable to all CNG containers manufactured on or after March 26, 1995, CNG fuel containers must meet a pressure cycling test which evaluates the container's durability, a burst test to measure its strength, and a fire test to ensure adequate pressure relief characteristics. The rule also specifies labeling requirements.

FMCSA has reviewed the NHTSA requirements and determined that all commercial motor vehicles manufactured on or after March 26, 1995, and equipped with CNG fuel tanks, should be required to be maintained to meet the applicable requirements of FMVSS No. 304.

Subpart F—Coupling Devices and Towing Methods

Section 393.70—Coupling Devices and Towing Methods, Except for Driveaway-Towaway Operations

Currently § 393.70(d) provides requirements for the attachment of safety devices in case of tow-bar failure. If two chains or cables are attached to the same point on the towing vehicle, or if a bridle or a single chain or cable is used, the point of attachment must be on the longitudinal centerline of the towing vehicle. A single safety device, other than a chain or cable, must also be attached to the towing vehicle at a point on its longitudinal centerline.

Western Trailers petitioned FHWA to amend § 393.70(d)(8) to allow safety devices to be attached as close as practicable to the longitudinal centerline of the towing vehicle. The petition is available for review in the docket. The petitioner argued that because the pintle hook is mounted on the longitudinal centerline of the towing vehicle, there is no practical centerline mounting position for the safety chain/cable attachment except upon or above the pintle hook itself.

In reviewing the history of the requirements for safety chains from 1941 through the present, FMCSA notes that a certain amount of flexibility had been allowed so that chains could be attached as close as ''practicable'' to the centerline. Although the current requirements, adopted on October 11, 1972 (37 FR 21439), do not appear to have created problems for other carriers, FMCSA agrees that there is a need to reexamine the requirement and eliminate any unnecessary restrictions. To that end, FMCSA believes that specifying the location for attachment point of the safety devices with such precision is unnecessarily design-restrictive.

The attachment of the safety devices to a point as close as ''practicable'' to the centerline, is needed to ensure that the combination of vehicles will maintain as much stability as possible in the event the coupling device fails. However, given the size and weight of a typical commercial motor vehicle, there is little technical justification for prohibiting attachment of the safety devices at a point within a few centimeters (or inches) off the centerline. In fact, failure of the coupling device at its centerline point of attachment to the towing vehicle might damage the anchor point of the safety chains, possibly resulting in complete separation of the trailer.

In addition, the current language of § 393.70(d)(8) may, under some circumstances, be inconsistent with § 393.70(d)(1), which prohibits the attachment of the safety device to the pintle hook or any other device on the towing vehicle to which a tow-bar is attached.

The previous provisions of § 393.70 provided a performance-based requirement while ensuring the safety of operation of the combination of vehicles. The language used, however, may have been difficult to enforce, in that ''practicability'' is a subjective term. This generally results in differences of opinion between vehicle manufacturers, motor carriers, and Federal and State enforcement officials as to what constitutes compliance. The amended rule allows the attachment point to be offset no more than a specified distance from the longitudinal centerline and provides flexibility without adversely affecting the tracking of the towed unit in the event of a pintle hook failure. FMCSA notes that the safety device is only intended to keep the combination of vehicles together if the pintle hook or other coupling device fails, and then only for a brief period until the driver brings the vehicle to a safe stop. Therefore, the change will not affect the safety of operation of the vehicles.

FMCSA is allowing safety chains or cables to be attached to the longitudinal centerline or within 152 mm (6 inches) to the right of the longitudinal centerline on the towing vehicle. This is applicable when: (1) Two chains or cables are attached to the same point on the towing vehicle; (2) a bridle or a single chain or cable is used; or (3) a single safety device is used. Given the wide variety of vehicle configurations and the condition of loading at the time of a potential tow-bar or pintle hook failure, the current design-restrictive requirement does not appear to ensure a greater degree of safety than the revision. Allowing the safety device to be no more than 152 mm (6 inches) from the longitudinal centerline should provide additional safety benefits in a few cases without changing the level of safety guaranteed by the current centerline requirement in other cases. It would also result in a requirement that is more performance-based and less design-restrictive.

Section 393.71—Coupling Devices and Towing Methods, Driveaway-Towaway Operations

Section 393.71(a) currently prohibits the use of more than one tow-bar in any combination of vehicles. Section 393.71(g)(2) indicates that coupling devices, such as those used for towing house trailers and employing ball and socket connections, shall be considered as tow-bars. However, the broad classification of ball and socket connections as tow-bars is not consistent with the definitions of the Society of Automotive Engineers. As a result, the use of more than one ball-and-socket connection in a combination of vehicles is prohibited. This situation is being clarified through this final rule.

FMCSA considers the stability and control of a combination vehicle using multiple ball-and-socket connections no better than that of a combination using multiple tow-bars. Given that the

stability and control would, at best, be comparable to a towing method which is prohibited, FMCSA is amending § 393.71(a)(2) to prohibit the use of more than one tow-bar and/or ball-and-socket coupling device in any combination. Section 393.71(g)(2) is being removed.

To improve the consistency between Section 393.70 and 393.71, the FMCSA amends § 393.71(b) by adding a new provision addressing weight distribution of towing and towed vehicles for saddle-mount combinations.

Sections 393.70(b)(3), 393.71(b)(2) and 393.71(c)(3) address the proper weight distribution and require that the coupling arrangement be such that it does not unduly interfere with the steering, braking, and maneuvering of the combination of vehicles. Section 393.70(b)(3) covers the use of fifth wheels for non-driveaway-towaway operations and §§ 393.71(b)(2) and (c)(3) cover full-mounted vehicles in driveaway-towaway operations. Section 393.71(b) does not, however, explicitly require that the arrangement of the saddle-mounted vehicles be such that it does not unduly interfere with the steering, braking and maneuvering of the combination of vehicles. The references to undue interference with steering, braking, and maneuvering in §§ 393.70 and 393.71 suggest that such requirements are generally intended for any vehicle configuration covered by these sections. Through regulatory guidance, the agency had indicated that saddle-mounted vehicles are to be arranged such that the gross weight of the vehicles is properly distributed to prevent the conditions currently covered by §§ 393.70(b)(3), 393.71(b)(2) and 393.71(c)(3). FMCSA is now codifying this guidance in § 393.71(b)(3).

FMCSA revises § 393.71(g) to remove obsolete language and provide more technically sound guidance on towing methods. Section 393.71(g)(1) currently requires the use of a tow-bar or saddle-mount connection for all vehicles towed in driveaway-towaway operations. This is inappropriate for towing semitrailers designed to be coupled to a fifth wheel. Through regulatory guidance, the agency has allowed the use of a fifth wheel. The agency codifies this guidance by revising § 393.71(g) to explicitly allow the use of a fifth wheel.

Subpart G—Miscellaneous Parts and Accessories

Section 393.75—Tires

FMCSA amends § 393.75(e) in order to make the requirements easier to understand. Section 393.75(e) prohibits the use of regrooved tires which have a load carrying capacity greater than that of 8.25–20 8 ply-rating tires, but does not specify the load range rating for these tires. According to the Tire and Rim Association's 2003 Year Book, an 8.25–20 bias ply tire has a maximum load carrying capacity of 2,232 kg (4,920 pounds) at 793 kPa (115 psi) cold inflation pressure. This maximum capacity applies to tires of load range G. Tires with the load range of E and F have maximum load carrying capacities of 1,837 kg (4,050 pounds) and 2,041 kg (4,500 pounds), respectively. FMCSA will now use 2,232 kg limit under § 393.75. The difference in load carrying capacity between a tire rated load range E and one rated load range G is 395 kg (870 pounds). In the absence of tire overloading, the difference in the amount of front axle loading between an axle equipped with load range E tires and a front axle equipped with load range G tires is 790 kg (1,740 pounds). There is no apparent safety benefit from adopting the more stringent limit of load range E for regrooved tires. Therefore, the use of a regrooved tire with a load carrying capacity equal to or greater than 2,232 kg (4,920 pounds) is a violation of § 393.75(e) if used on the front wheels of a truck or truck tractor.

FMCSA notes that a radial ply tire of the same size and load range (*i.e.*, 8.25R20) has the same load carrying capacity, but at 827 kPa (120 psi) cold inflation pressure. Because the prohibition is based on load carrying capacity, FMCSA is replacing the reference to a specific tire size with the 2,232 kg (4,920 pound) value currently listed in the Tire and Rim Association's publication.

Section 393.78 Windshield Wipers

FMCSA amends § 393.78 to cross-reference FMVSS No. 104. The NHTSA requirement has been in effect since December 1968. Because vehicle manufacturers have been required to meet the requirements since 1968, FMCSA does not believe that motor carriers who have maintained their commercial motor vehicles should have any problem complying with the new rule. As for motor vehicles manufactured before December 1968, they are required to be equipped with a power-driven windshield wiping system with at least two wiper blades, one on each side of the centerline of the windshield. Motor vehicles which depend upon vacuum to operate the windshield wipers must have the wiper system constructed and maintained such that the performance of the wipers would not be adversely affected by a change in the intake manifold pressure. The requirements for vehicles manufactured before December 1968 were originally established by the former Interstate Commerce Commision and were applicable to vehicles manufactured on and after June 30, 1953.

FMCSA removes the exemption for the towing vehicle in a driveaway-towaway operation because there is no justification for allowing a vehicle to be driven without both windshield wipers in proper working order. The change should not result in an increased economic burden on the motor carrier industry.

Section 393.79—Windshield Defrosting Device

Section 393.79 is revised to cross-reference FMVSS No. 103. Vehicles manufactured on or after December 25, 1968, are required to meet the requirements in effect on the date of manufacture. Vehicles manufactured before December 25, 1968, are required, at a minimum, to be equipped with a means for preventing the accumulation of ice, snow, frost, or condensation to obstruct the driver's view through the windshield while the vehicle is being driven.

In addition, the exemption for the towing vehicle in a driveaway-towaway operation is removed. There is no justification for allowing a vehicle to be driven without a windshield defrosting device in proper working order.

Section 393.82—Speedometer

Section 393.82 requires that every bus, truck, and truck-tractor be equipped with a speedometer indicating speed in miles per hour. Speedometers must operate with ''reasonable accuracy.'' Appendix A to subchapter B (prior to its removal from the FMCSRs on November 23, 1994 (59 FR 60319)) interpreted as ''reasonable'' an accuracy of plus or minus 8 km/hr (5 mph) at a speed of 80 km/hr (50 mph). The interpretation indicated that accuracy within these limits is sufficient for a professional driver to ascertain the true speed of the vehicle. FMCSA is including this accuracy limit in § 393.82 to make the requirement easier to understand. FMCSA is also removing the driveaway-towaway exemption to the speedometer requirements because there is no justification for allowing a vehicle to be driven without a speedometer in proper working order. The changes should not result in an increased economic burden on the motor carrier industry.

Section 393.87—Flags on Projecting Loads

Section 393.87 is being revised to make the requirements consistent with the American Association of State Highway and Transportation Officials' (AASHTO) Guide for Maximum Dimensions and Weights of Motor Vehicles and for the Operation of Nondivisible Load Oversize and Overweight Vehicles, GSW–3, 1991. The AASHTO publication provides guidance on the use of warning flags for vehicles and loads which exceed legal width or length, or which have a rear overhang in excess of the legal limit. The AASHTO guidelines call for the use of red or orange fluorescent warning flags which are at least 457 mm (18 inches) square. Because the AASHTO guide appears to cover the majority of the cases to which the current rule is applicable, and represents a consensus of State and industry practices, FMCSA is revising § 393.87 to adopt certain provisions of those guidelines.

Commercial motor vehicles transporting loads which extend beyond the sides by more than 102 mm (4 inches) or more than 1,219 mm (4 feet) beyond the rear must have the extremities of the load marked with red or orange fluorescent warning flags. Each warning flag must be at least 457 mm (18 inches) square as opposed to the current requirement of 305 mm (12 inches) square.

With regard to the number of flags and their positions, a single flag at the extreme rear is required if the projecting load is 610 mm (2 feet) wide or less. Two warning flags are required if the projecting load is wider than 610 mm. Flags are required to be positioned to indicate maximum width of loads which extend beyond the sides and/or rear of the vehicle.

Section 393.94—Vehicle Interior Noise Level

FMCSA simplifies its regulation concerning the applicability of the interior noise levels in commercial motor vehicles. Section 393.94(a) and (d) make reference to certain vehicles manufactured before October 1, 1974, and grant motor carriers until April 1, 1975, to comply with the regulation. For vehicles operated wholly within Hawaii, carriers were given until April 1, 1976, to comply. Because these deadlines have passed, FMCSA is deleting the references from § 393.94. In addition, FMCSA is updating the reference to the American National Standards Institute (ANSI) specifications for sound level meters. Currently, § 393.94 references the 1971 version of ANSI S1.4, Specification for Sound Level Meters. FMCSA incorporates by reference the 1983 version and removing the footnote to paragraph (c). Information on the availability of the ANSI document is covered under § 393.7.

Section 393.95—Emergency Equipment on All Power Units

FMCSA eliminates the reference to lightweight vehicles in paragraph (a). The term became obsolete when the agency implemented the requirements of the Motor Carrier Safety Act of 1984 (49 U.S.C. 31131 *et. seq.*) and limited the applicability of part 393 to ''commercial motor vehicles'' as defined in that statute (53 FR 18042, May 19, 1988). Sections 393.95(a)(2)(i) and (a)(2)(ii) are being amended to remove obsolete references to vehicles equipped with fire extinguishers prior to July 1, 1971, and January 1, 1973, respectively. While some of these vehicles are still in operation, it is unlikely that the motor carriers are still using fire extinguishers that are more than 30 years old.

FMCSA revises § 393.95 to remove the specifications for bidirectional warning triangles manufactured prior to January 1, 1974. Such triangles are already prohibited on any vehicle manufactured on or after January 1, 1974. Therefore, only those carriers operating commercial motor vehicles manufactured before January 1, 1974, and equipped with warning triangles manufactured before that date, are affected.

FMCSA revises the requirements on the mounting of fire extinguishers to provide more specific guidance. Fire extinguishers are required to be securely mounted to prevent sliding, rolling, or vertical movement relative to the motor vehicle. Currently, § 393.95(a)(1) states only that the extinguisher be securely mounted.

With regard to extinguishing agents, FMCSA replaces the reference to the Underwriters Laboratories' (UL) Classification of Comparative Life Hazard of Gases and Vapors. The UL study was conducted in the 1950's and is considered obsolete information. UL has recommended that the FMCSA consider referencing the Environmental Protection Agency's regulations under Subpart G of 40 CFR part 82, Protection of Stratospheric Ozone. Subpart G implements section 612 of the Clean Air Act (42 U.S.C. 7401 *et seq.*) by determining safe alternatives to ozone-depleting compounds. It is usually referred to as the ''Significant New Alternatives Policy'' (SNAP) program. The SNAP regulations take into consideration the toxicity of substitutes for ozone-depleting compounds, but they also address potential impacts on atmospheric ozone, global warming and other issues related to human exposure and the environment. FMCSA is therefore requiring that fire extinguishers comply with the toxicity provisions of the SNAP regulations. While the other issues (ozone depletion, global warming, etc.) are important, there is no practical reason to address these issues in § 393.95.

Section 393.201—Frames

In its final rule published on December 7, 1988 (53 FR 49380), FHWA prohibited cracked, loose, sagging or broken frames. However, the agency inadvertently failed to include trailer frames. FMCSA amends § 393.201 to remedy this oversight by replacing ''bus, truck and truck-tractor'' with the term ''commercial motor vehicles'' in paragraph (a).

FMCSA revises § 393.201(d) to make the regulation more practical. Paragraph (d) was intended to prohibit welding on vehicle frames constructed of certain types of steel which is weakened by the welding process. However, the current wording is overly restrictive. To address this issue, paragraph (d) is being revised to allow welding which is performed in accordance with the vehicle manufacturer's recommendations.

In addition, FMCSA removes paragraph (f). Paragraph (f) states that field repairs are allowed. There is no practical reason for retaining this provision since there was never a requirement that the motor carrier repair its vehicle only at certain locations.

Section 393.207—Suspension Systems

In response to a petition from the Truck Trailer Manufacturers Association (TTMA), FMCSA is amending § 393.207 to prohibit any device which is capable of dumping air individually from either of the two axle suspension systems on a semitrailer equipped with air-suspended ''spread'' or ''split'' tandem axles. TTMA indicated that the petition was not intended to prohibit: (1) Devices that could exhaust air from both axle systems simultaneously, or (2) lift axles on multi-axle units. The petition is available for review in the docket.

According to the TTMA, about 30,000 semitrailers are manufactured each year with split tandem axles and air suspensions. These axles are not genuine tandems, but rather two single axles spaced at least 3,048 mm (10 feet) apart, the minimum separation required by the bridge formula [23 U.S.C. 127(a)] before each of them can carry the full 9,072 kg (20,000 pounds) allowed by

Federal law. The TTMA estimates that 5,000 of these trailers are also equipped with valves to depressurize the suspension system of one of the trailer axles, and sometimes of either axle. These valves are installed to compensate for problems created by the split tandem configuration. Normal tandems experience moderate tire scrubbing in turns because the trailer pivots around a point that lies between the two axles. Tire scrubbing is more severe in split tandems because the pivot point is much farther from either axle. Dumping air pressure from the suspension system of the rear (or less often the leading) trailer axle reduces its load and allows the trailer to pivot around the other axle with less resistance and tire scrubbing. The TTMA's own tests showed that if each axle in a split tandem is loaded to 8,845 kg (19,500 pounds) and pressure in the rear axle is dumped, the resulting weight shift will make the front axle 3,175 to 5,443 kg (7,000 to 12,000 pounds) heavier than the rear.

Dump valves were originally designed to aid maneuvering at 8 km/hour (5 mph) or less, mainly at terminals or other loading points. According to the TTMA, however, many drivers now activate them at higher speeds on streets and highways to turn corners more easily and to reduce tire wear. The TTMA also believes that suspension pressure is sometimes vented accidentally because of wiring problems the moment the tractor hooks up to the trailer. In both cases, the inevitable weight shift often produces a load on the pressurized axle that exceeds the manufacturers' ratings for that axle and its wheels, tires and brakes. In addition, the loaded axle frequently exceeds the single-axle weight limit.

FMCSA continues to believe the petition has merit, and the agency is amending § 393.207 to prohibit controls of this type. Although § 393.3, which allows the use of equipment and accessories that do not decrease operational safety, could be interpreted as prohibiting the use of equipment to disable the air suspension of one axle on a two-axle trailer, addressing this issue through rulemaking is the most appropriate course of action.

FMCSA has modified the language included in the 1997 NPRM in response to comments from the ATA. ATA agreed with the proposal, but expressed concern that motor carriers need the flexibility to exhaust air from the suspension during low-speed turns. ATA believes this is necessary because there is significant resistance or tire scrubbing when drivers make low-speed turning maneuvers with a spread tandem trailer. FMCSA agrees and has revised the language to allow the exhausting of air if the controls are either located on the trailer, or the power unit and trailer combination are not capable of traveling at a speed greater than 10 miles per hour while the air is exhausted from the suspension system.

Section 393.209—Steering Wheel Systems

FMCSA amends § 393.209(b) to correct an error in the maximum steering wheel lash for 406 mm (16 inch) steering wheels and to add steering wheel lash limits for 483 mm (19 inch) and 533 mm (21 inch) diameter steering wheels. The table specifying steering wheel lash limits currently allows 114 mm (4½ inches) lash for steering wheel diameters of 406 mm (16 inches) or less if the vehicle has a power steering system. This corresponds to an angle of approximately 32 degrees which is about 2 degrees more than the steering wheel lash limits for power steering systems using larger diameter steering wheels. Because there is no apparent technical basis for having a less stringent standard for 406 mm (16 inch) diameter steering wheel systems, FMCSA is changing the steering wheel lash limit to 108 mm (4¼ inches).

FMCSA adds steering wheel lash limits for 483 mm (19 inch) and 533 mm (21 inch) diameter steering wheels because these are relatively common steering wheel sizes. The limits being adopted for these steering wheel diameters is consistent with the 14 degree and 30 degree limits currently used for manual and power steering systems respectively.

Section 393.209 is amended to include the term ball-and-socket joints. Some steering system designs include ball-and-socket joints instead of universal joints. While the basic function of the two types of joints is similar, only universal joints are covered by § 393.209(d). Defects or unsafe conditions of ball-and-socket joints are currently implicitly covered under § 396.3(a)(1). The agency believes that such important items should be explicitly covered whenever possible.

Regulatory Analyses and Notices

Executive Order 12866 (Regulatory Planning and Review) and DOT Regulatory Policies and Procedures

FMCSA has determined that this action is not a significant regulatory action within the meaning of Executive Order 12866 or within the meaning of Department of Transportation regulatory policies and procedures. This document is not required to be reviewed by the Office of Management and Budget. Because the rulemaking is focused on improving the clarity of the safety requirements in general, and improving the cross-references between the FMCSRs and FMVSSs, the final rule will not result in costs to the industry. A regulatory evaluation has been prepared by the Agency and is available in the docket.

Regulatory Flexibility Act

In compliance with the Regulatory Flexibility Act (5 U.S.C. 601–612), FMCSA has considered the effects of this regulatory action on small entities and determined that this rule will not have a significant impact on a substantial number of small entities, as defined by the U.S. Small Business Administration's Office of Size Standards. This final rule makes amendments and revisions to parts 390, 392, and 393 of the FMCSRs to remove obsolete and redundant regulations; respond to several petitions for rulemaking; provide improved definitions of vehicle types, systems, and components; resolve inconsistencies between part 393 and NHTSA's FMVSSs under 49 CFR part 571; and codify certain FMCSA regulatory guidance concerning the requirements of part 393. Generally, the amendments do not involve the establishment of new or more stringent requirements, but a clarification of existing requirements. This action is intended to make many sections more concise, easier to understand and more performance oriented. Accordingly, FMCSA has considered the economic impacts of the rulemaking on small entities and certifies that this rule will not have a significant economic impact on a substantial number of small entities. A regulatory flexibility analysis has been prepared by the Agency and is available in the docket.

Unfunded Mandates Reform Act of 1995

This rulemaking will not impose an unfunded Federal mandate, as defined by the Unfunded Mandates Reform Act of 1995 (2 U.S.C. § 1532 *et seq.*), that will result in the expenditure by State, local, and tribal governments, in the aggregate, or by the private sector, of $120.7 million or more in any 1 year.

Executive Order 12988 (Civil Justice Reform)

This action will meet applicable standards in sections 3(a) and 3(b)(2) of Executive Order 12988, Civil Justice Reform, to minimize litigation,

eliminate ambiguity, and reduce burden.

Executive Order 13045 (Protection of Children)

FMCSA has analyzed this action under Executive Order 13045, Protection of Children from Environmental Health Risks and Safety Risks. This rulemaking will not concern an environmental risk to health or safety that may disproportionately affect children.

Executive Order 12630 (Taking of Private Property)

This rulemaking will not effect a taking of private property or otherwise have taking implications under Executive Order 12630, Governmental Actions and Interference with Constitutionally Protected Property Rights.

Executive Order 13132 (Federalism)

This action has been analyzed in accordance with the principles and criteria contained in Executive Order 13132. It has been determined that this rulemaking will not have a substantial direct effect on States, nor will it limit the policy-making discretion of the States. Nothing in this document will preempt any State law or regulation.

Executive Order 12372 (Intergovernmental Review)

Catalog of Federal Domestic Assistance Program Number 20.217, Motor Carrier Safety. The regulations implementing Executive Order 12372 regarding intergovernmental consultation on Federal programs and activities do not apply to this program.

Paperwork Reduction Act

This final rule does not contain a collection of information requirement for the purposes of the Paperwork Reduction Act of 1995, 44 U.S.C. 3501 *et seq.*

National Environmental Policy Act

We have analyzed this action for purposes of the National Environmental Policy Act of 1969 (42 U.S.C. 4321 *et seq.*) and have determined that this action will not have an effect on the quality of the environment. However, an environmental assessment (EA) is required because the rulemaking is not among those covered by a categorical exclusion. A copy of the EA is included in the docket referenced at the beginning of this notice.

In accordance with the National Environmental Policy Act and the Council of Environmental Quality Regulations (40 CFR parts 1500–1508), the agency has prepared a finding of no significant impact (FONSI). A copy of the FONSI is included in the docket at the beginning of this notice.

Executive Order 13211 (Energy Effects)

We have analyzed this action under Executive Order 13211, Actions Concerning Regulations That Significantly Affect Energy Supply, Distribution or Use. We have determined that it will not be a ''significant energy action'' under that order because it will not be economically significant and would not be likely to have a significant adverse effect on the supply, distribution, or use of energy.

List of Subjects

49 CFR Part 390

Highway safety, Highways and roads, Intermodal transportation, Motor carriers, Motor vehicle identification, Motor vehicle safety, Reporting and recordkeeping requirements.

49 CFR Part 392

Highway safety, Highways and roads, Motor carriers—driving practices, Motor vehicle safety.

49 CFR Part 393

Highways and roads, Incorporation by reference, Motor carriers, Motor vehicle equipment, Motor vehicle safety.

Issued on: July 13, 2005.

Annette M. Sandberg,

Administrator.

■ In consideration of the foregoing, FMCSA amends title 49, Code of Federal Regulations, subchapter B, chapter III, as follows:

PART 390—[AMENDED]

■ 1. The authority citation for part 390 continues to read as follows:

Authority: 49 U.S.C. 508, 13301, 13902, 31133, 31136, 31502, 31504, and sec. 204, Pub. L. 104–88, 109 Stat. 803, 941 (49 U.S.C. 701 note); sec. 114, Pub. L. 103–311, 108 Stat. 1673, 1677; sec. 217, Pub. L. 106–159, 113 Stat. 1748, 1767; and 49 CFR 1.73.

■ 2. Section 390.5 is amended by revising the definition of driveaway-towaway operation to read as follows:

§ 390.5 Definitions.

* * * * *

Driveaway-towaway operation means an operation in which an empty or unladen motor vehicle with one or more sets of wheels on the surface of the roadway is being transported:

(1) Between vehicle manufacturer's facilities;

(2) Between a vehicle manufacturer and a dealership or purchaser;

(3) Between a dealership, or other entity selling or leasing the vehicle, and a purchaser or lessee;

(4) To a motor carrier's terminal or repair facility for the repair of disabling damage (as defined in § 390.5) following a crash; or

(5) To a motor carrier's terminal or repair facility for repairs associated with the failure of a vehicle component or system; or

(6) By means of a saddle-mount or tow-bar.

* * * * *

PART 392—[AMENDED]

■ 3. The authority citation for part 392 continues to read as follows:

Authority: 49 U.S.C. 13902, 31136, 31502; and 49 CFR 1.73.

■ 4. Section 392.33 is revised to read as follows:

§ 392.33 Obscured lamps or reflective devices/material.

(a) No commercial motor vehicle shall be driven when any of the lamps or reflective devices/material required by subpart B of part 393 of this title are obscured by the tailboard, or by any part of the load or its covering, by dirt, or other added vehicle or work equipment or otherwise.

(b) *Exception.* The conspicuity treatments on the front end protection devices of the trailer may be obscured by part of the load being transported.

PART 393—[AMENDED]

■ 5. The authority citation for part 393 continues to read as follows:

Authority: 49 U.S.C. 322, 31136, and 31502; Section 1041(b) of Pub. L. 102–240, 105 Stat. 1914, 1993 (1991); and 49 CFR 1.73.

■ 6. Section 393.1 is revised to read as follows:

§ 393.1 Scope of the rules in this part.

(a) The rules in this part establish minimum standards for commercial motor vehicles as defined in § 390.5 of this title. Only motor vehicles (as defined in § 390.5) and combinations of motor vehicles which meet the definition of a commercial motor vehicle are subject to the requirements of this part. All requirements that refer to motor vehicles with a GVWR below 4,536 kg (10,001 pounds) are applicable only when the motor vehicle or combination of motor vehicles meets the definition of a commercial motor vehicle.

(b) Every employer and employee shall comply and be conversant with the requirements and specifications of this part. No employer shall operate a

commercial motor vehicle, or cause or permit it to be operated, unless it is equipped in accordance with the requirements and specifications of this part.

■ 7. Section 393.5 is amended by removing the definitions of ''bus'' and ''container chassis''; and by adding in alphabetical order definitions for ''air brake system,'' ''air-over-hydraulic brake system,'' ''auxiliary driving lamp,'' ''boat trailer,'' ''brake power assist unit,'' ''brake power unit,'' ''container chassis trailer,'' ''electric brake system,'' ''emergency brake,'' ''front fog lamp,'' ''hydraulic brake system,'' ''multi-piece windshield,'' ''split service brake system,'' ''tow bar,'' ''trailer kingpin,'' ''vacuum brake system,'' ''windshield''; and by revising the definitions of ''chassis,'' ''clearance lamp,'' ''heater,'' ''heavy hauler trailer,'' ''parking brake system,'' ''side marker lamp (intermediate),'' and ''side marker lamps'' to read as follows:

§ 393.5 Definitions.

* * * * *

Air brake system. A system, including an air-over-hydraulic brake subsystem, that uses air as a medium for transmitting pressure or force from the driver control to the service brake, but does not include a system that uses compressed air or vacuum only to assist the driver in applying muscular force to hydraulic or mechanical components.

Air-over-hydraulic brake subsystem. A subsystem of the air brake system that uses compressed air to transmit a force from the driver control to a hydraulic brake system to actuate the service brakes.

* * * * *

Auxiliary driving lamp. A lighting device mounted to provide illumination forward of the vehicle which supplements the upper beam of a standard headlighting system. It is not intended for use alone or with the lower beam of a standard headlamp system.

* * * * *

Boat trailer. A trailer designed with cradle-type mountings to transport a boat and configured to permit launching of the boat from the rear of the trailer.

* * * * *

Brake power assist unit. A device installed in a hydraulic brake system that reduces the operator effort required to actuate the system, but which if inoperative does not prevent the operator from braking the vehicle by a continued application of muscular force on the service brake control.

Brake power unit. A device installed in a brake system that provides the energy required to actuate the brakes, either directly or indirectly through an auxiliary device, with the operator action consisting only of modulating the energy application level.

* * * * *

Chassis. The load-supporting frame of a commercial motor vehicle, exclusive of any appurtenances which might be added to accommodate cargo.

Clearance Lamps. Lamps that provide light to the front or rear, mounted on the permanent structure of the vehicle, such that they indicate the overall width of the vehicle.

Container chassis trailer. A semitrailer of skeleton construction limited to a bottom frame, one or more axles, specially built and fitted with locking devices for the transport of intermodal cargo containers, so that when the chassis and container are assembled, the units serve the same function as an over the road trailer.

* * * * *

Electric brake system. A system that uses electric current to actuate the service brake.

Emergency brake. A mechanism designed to stop a motor vehicle after a failure of the service brake system.

* * * * *

Front fog lamp. A lighting device whose beam provides downward illumination forward of the vehicle and close to the ground, and is to be used only under conditions of rain, snow, dust, smoke or fog. A pair of fog lamps may be used alone, with parking, tail, side, marker, clearance and identification lamps, or with a lower beam headlamp at the driver's discretion in accordance with state and local use law.

* * * * *

Heater. Any device or assembly of devices or appliances used to heat the interior of any motor vehicle. This includes a catalytic heater which must meet the requirements of § 177.834(l)(2) of this title when Class 3 (flammable liquid) or Division 2.1 (flammable gas) is transported.

Heavy hauler trailer. A trailer which has one or more of the following characteristics, but which is not a container chassis trailer:

(1) Its brake lines are designed to adapt to separation or extension of the vehicle frame; or

(2) Its body consists only of a platform whose primary cargo-carrying surface is not more than 1,016 mm (40 inches) above the ground in an unloaded condition, except that it may include sides that are designed to be easily removable and a permanent ''front-end structure'' as that term is used in § 393.106 of this title.

* * * * *

Hydraulic brake system. A system that uses hydraulic fluid as a medium for transmitting force from a service brake control to the service brake, and that may incorporate a brake power assist unit, or a brake power unit.

* * * * *

Multi-piece windshield. A windshield consisting of two or more windshield glazing surface areas.

Parking brake system. A mechanism designed to prevent the movement of a stationary motor vehicle.

* * * * *

Side marker lamp (Intermediate). A lamp mounted on the side, on the permanent structure of the motor vehicle that provides light to the side to indicate the approximate middle of the vehicle, when the motor vehicle is 9.14 meters (30 feet) or more in length.

Side Marker Lamps. Lamps mounted on the side, on the permanent structure of the motor vehicle as near as practicable to the front and rear of the vehicle, that provide light to the side to indicate the overall length of the motor vehicle.

* * * * *

Split service brake system. A brake system consisting of two or more subsystems actuated by a single control designed so that a leakage-type failure of a pressure component in a single subsystem (except structural failure of a housing that is common to two or more subsystems) shall not impair the operation of any other subsystem.

* * * * *

Tow bar. A strut or column-like device temporarily attached between the rear of a towing vehicle and the front of the vehicle being towed.

* * * * *

Trailer kingpin. A pin (with a flange on its lower end) which extends vertically from the front of the underside of a semitrailer and which locks into a fifth wheel.

* * * * *

Vacuum brake system. A system that uses a vacuum and atmospheric pressure for transmitting a force from the driver control to the service brake, not including a system that uses vacuum only to assist the driver in applying muscular force to hydraulic or mechanical components.

* * * * *

Windshield. The principal forward facing glazed surface provided for forward vision in operating a motor vehicle.

* * * * *

■ 8. Section 393.7 is amended by redesignating paragraphs (b)(1) through (b)(6) as (b)(17) through (b)(23), adding new paragraphs (b)(1) through (b)(16), revising newly redesignated (b)(17) and adding paragraphs (c)(7) and (c)(8) to read as follows:

§ 393.7 Matters incorporated by reference.

* * * * *

(b)(1) Auxiliary Upper Beam Lamps, Society of Automotive Engineers (SAE) J581, July 2004, incorporation by reference approved for § 393.24(b).

(2) Front Fog Lamp, SAE J583, August 2004, incorporation by reference approved for § 393.24(b).

(3) Stop Lamps for Use on Motor Vehicles Less Than 2032 mm in Overall Width, SAE J586, March 2000, incorporation by reference approved for § 393.25(c).

(4) Stop Lamps and Front- and Rear-Turn Signal Lamps for Use on Motor Vehicles 2032 mm or more in Overall Width, SAE J2261, January 2002, incorporated by reference approved for § 393.25 (c).

(5) Tail Lamps (Rear Position Lamps) for Use on Motor Vehicles Less Than 2032 mm in Overall Width, SAE J585, March 2000, incorporation by reference approved for § 393.25(c).

(6) Tail Lamps (Rear Position Lamps) for Use on Vehicles 2032 mm or More in Overall Width, SAE J2040, March 2002, incorporation by reference approved for § 393.25(c).

(7) Turn Signal Lamps for Use on Motor Vehicles Less Than 2032 mm in Overall Width, SAE J588, March 2000, incorporation by reference approved for § 393.25(c).

(8) Sidemarker Lamps for Use on Road Vehicles Less Than 2032 mm in Overall Width, SAE J592, August 2000, incorporation by reference approved for § 393.25(c).

(9) Directional Flashing Optical Warning Devices for Authorized Emergency, Maintenance, and Service Vehicles, SAE J595, January 2005, incorporation by reference approved for § 393.25(e).

(10) Optical Warning Devices for Authorized Emergency, Maintenance, and Service Vehicles, SAE J845, May 1997, incorporation by reference approved for § 393.25(e).

(11) Gaseous Discharge Warning Lamp for Authorized Emergency, Maintenance, and Service Vehicles, SAE J1318, May 1998, incorporation by reference approved for § 393.25(e).

(12) Reflex Reflectors, SAE J594, December 2003, incorporation by reference approved for § 393.26(c).

(13) Standard Specification for Retroreflective Sheeting for Traffic Control, American Society of Testing and Materials, ASTM D 4956–04, 2004, incorporation by reference approved for § 393.26(c).

(14) Automobile, Truck, Truck-Tractor, Trailer, and Motor Coach Wiring, SAE J1292, October 1981, incorporated by reference approved for § 393.28.

(15) Long Stroke Air Brake Actuator Marking, SAE J1817, July 2001, incorporation by reference approved for § 393.47(e).

(16) American National Standard for Safety Glazing Materials for Glazing Motor Vehicles and Motor Vehicle Equipment Operating on Land Highways-Safety Standard, SAE Z26.1–1996, August 1997, incorporation by reference approved for § 393.62(d).

(17) Specification for Sound Level Meters, American National Standards Institute, S1.4–1983, incorporation by reference approved for § 393.94(c).

* * * * *

(c) *Availability.* The materials incorporated by reference are available as follows:

* * * * *

(7) Standards of the Society of Automotive Engineers (SAE). Information and copies may be obtained by writing to: Society of Automotive Engineers, Inc., 400 Commonwealth Drive, Warrendale, Pennsylvania 15096.

(8) Standards of the American National Standards Institute (ANSI). Information and copies may be obtained by writing to: American National Standards Institute, 25 West 43rd Street, New York, New York 10036.

* * * * *

■ 9. The title of subpart B is revised to read as follows:

Subpart B—Lamps, Reflective Devices, and Electrical Wiring

■ 10. Section 393.9 is revised to read as follows:

§ 393.9 Lamps operable, prohibition of obstructions of lamps and reflectors.

(a) All lamps required by this subpart shall be capable of being operated at all times. This paragraph shall not be construed to require that any auxiliary or additional lamp be capable of operating at all times.

(b) Lamps and reflective devices/material required by this subpart must not be obscured by the tailboard, or by any part of the load, or its covering by dirt, or other added vehicle or work equipment, or otherwise. Exception: The conspicuity treatments on the front end protection devices may be obscured by part of the load being transported.

■ 11. Section 393.11 is revised to read as follows:

§ 393.11 Lamps and reflective devices.

(a)(1) *Lamps and reflex reflectors.* Table 1 specifies the requirements for lamps, reflective devices and associated equipment by the type of commercial motor vehicle. The diagrams in this section illustrate the position of the lamps, reflective devices and associated equipment specified in Table 1. All commercial motor vehicles manufactured on or after December 25, 1968, must, at a minimum, meet the applicable requirements of 49 CFR 571.108 (FMVSS No. 108) in effect at the time of manufacture of the vehicle. Commercial motor vehicles manufactured before December 25, 1968, must, at a minimum, meet the requirements of subpart B of part 393 in effect at the time of manufacture.

(2) *Exceptions:* Pole trailers and trailer converter dollies must meet the part 393 requirements for lamps, reflective devices and electrical equipment in effect at the time of manufacture. Trailers which are equipped with conspicuity material which meets the requirements of § 393.11(b) are not required to be equipped with the reflex reflectors listed in Table 1 if—

(i) The conspicuity material is placed at the locations where reflex reflectors are required by Table 1; and

(ii) The conspicuity material when installed on the motor vehicle meets the visibility requirements for the reflex reflectors.

(b) *Conspicuity Systems.* Each trailer of 2,032 mm (80 inches) or more overall width, and with a GVWR over 4,536 kg (10,000 pounds), manufactured on or after December 1, 1993, except pole trailers and trailers designed exclusively for living or office use, shall be equipped with either retroreflective sheeting that meets the requirements of FMVSS No. 108 (S5.7.1), reflex reflectors that meet the requirements FMVSS No. 108 (S5.7.2), or a combination of retroreflective sheeting and reflex reflectors that meet the requirements of FMVSS No. 108 (S5.7.3). The conspicuity system shall be installed and located as specified in FMVSS No. 108 [S5.7.1.4 (for retroreflective sheeting), S5.7.2.2 (for reflex reflectors), S5.7.3 (for a combination of sheeting and reflectors)] and have certification and markings as required by S5.7.1.5 (for retroreflective tape) and S5.7.2.3 (for reflex reflectors).

(c) *Prohibition on the use of amber stop lamps and tail lamps.* No commercial motor vehicle may be equipped with an amber stop lamp, a tail lamp, or other lamp which is

optically combined with an amber stop lamp or tail lamp.

(d) *Prohibition on the use of auxiliary lamps that supplement the identification lamps.* No commercial motor vehicle may be equipped with lamps that are in a horizontal line with the required identification lamps unless those lamps are required by this regulation.

TABLE 1.—REQUIRED LAMPS AND REFLECTORS ON COMMERCIAL MOTOR VEHICLES

Item on the vehicle	Quantity	Color	Location	Position	Height above the road surface in millimeters (mm) (with English units in parenthesis) measured from the center of the lamp at curb weight	Vehicles for which the devices are required
Headlamps	2	White	Front	On the front at the same height, with an equal number at each side of the vertical center line as far apart as practicable.	Not less than 559 mm (22 inches) nor more than 1,372 mm (54 inches).	A, B, C
Turn signal (front). See footnotes #2 and 12.	2	Amber	At or near the front.	One on each side of the vertical centerline at the same height and as far apart as practicable.	Not less than 381 mm (15 inches) nor more than 2,108 mm (83 inches).	A, B, C
Identification lamps (front). See footnote #1.	3	Amber	Front	As close as practicable to the top of the vehicle, at the same height, and as close as practicable to the vertical centerline of the vehicle (or the vertical centerline of the cab where different from the centerline of the vehicle) with lamp centers spaced not less than 152 mm (6 inches) or more than 305 mm (12 inches) apart. Alternatively, the front lamps may be located as close as practicable to the top of the cab.	All three on the same level as close as practicable to the top of the motor vehicle.	B, C
Tail lamps. See footnotes #5 and 11.	2	Red	Rear	One lamp on each side of the vertical centerline at the same height and as far apart as practicable.	Both on the same level between 381 mm (15 inches) and 1,829 mm (72 inches).	A, B, C, D, E, F, G, H

TABLE 1.—REQUIRED LAMPS AND REFLECTORS ON COMMERCIAL MOTOR VEHICLES

Item on the vehicle	Quantity	Color	Location	Position	Height above the road surface in millimeters (mm) (with English units in parenthesis) measured from the center of the lamp at curb weight	Vehicles for which the devices are required
Stop lamps. See footnotes #5 and 13.	2	Red	Rear	One lamp on each side of the vertical centerline at the same height and as far apart as practicable.	Both on the same level between 381 mm (15 inches) and 1,829 mm (72 inches).	A, B, C, D, E, F, G
Clearance lamps. See footnotes #8, 9, 10, 15 & 17.	2	Amber	One on each side of the front of the vehicle.	One on each side of the vertical centerline to indicate overall width.	Both on the same level as high as practicable.	B, C, D, G, H
	2	Red	One on each side of the rear of the vehicle.	One on each side of the vertical centerline to indicate overall width.	Both on the same level as high as practicable.	B, D, G, H
Reflex reflector, intermediate (side).	2	Amber	One on each side.	At or near the midpoint between the front and rear side marker lamps, if the length of the vehicle is more than 9,144 mm (30 feet).	Between 381 mm (15inches) and 1,524 (60 inches).	A, B, D, F, G
Reflex reflector (rear). See footnotes #5, 6, and 8.	2	Red	Rear	One on each side of the vertical centerline, as far apart as practicable and at the same height.	Both on the same level, between 381 mm (15 inches) and 1,524 mm (60 inches).	A, B, C, D, E, F, G
Reflex reflector (rear side).	2	Red	One on each side (rear).	As far to the rear as practicable.	Both on the same level, between 381 mm (15 inches) and 1,524 mm (60 inches).	A, B, D, F, G
Reflex reflector (front side). See footnote #16.	2	Amber	One on each side (front).	As far to the front as practicable.	Between 381 mm (15 inches) and 1,524 mm (60 inches).	A, B, C, D, F, G
License plate lamp (rear). See footnote #11.	1	White	At rear license plate to illuminate the plate from the top or sides.		No requirements	A, B, C, D, F, G
Side marker lamp (front). See footnote #16.	2	Amber	One on each side.	As far to the front as practicable.	Not less than 381 mm (15 inches).	A, B, C, D, F

TABLE 1.—REQUIRED LAMPS AND REFLECTORS ON COMMERCIAL MOTOR VEHICLES—Continued

Item on the vehicle	Quantity	Color	Location	Position	Height above the road surface in millimeters (mm) (with English units in parenthesis) measured from the center of the lamp at curb weight	Vehicles for which the devices are required
Side marker lamp intermediate.	2	Amber	One on each side.	At or near the midpoint between the front and rear side marker lamps, if the length of the vehicle is more than 9,144 mm (30 feet).	Not less tan 381 mm (15 inches).	A, B, D, F, G
Side marker lamp (rear). See footnotes #4 and 8.	2	Red	One on each side.	As far to the rear as practicable.	Not less than 381 mm (15 inches), and on the rear of trailers not more than 1,524 mm (60 inches).	A, B, D, F, G
Turn signal (rear). See footnotes #5 and 12.	2	Amber or red	Rear	One lamp on each side of the vertical centerline as far apart as practicable.	Both on the same level, between 381 mm (15 inches) and 2,108 mm (83 inches).	A, B, C, D, E, F, G
Identification lamp (rear). See footnotes #3, 7, and 15.	3	Red	Rear	One as close as practicable to the vertical centerline. One on each side with lamp centers spaced not less than 152 mm (6 inches) or more than 305 mm (12 inches) apart.	All three on the same level as close as practicable to the top of the vehicle.	B, D, G
Vehicular hazard warning signal flasher lamps. See footnotes #5 and 12.	2	Amber	Front	One lamp on each side of the vertical centerline, as far apart as practicable.	Both on the same level, between 381 mm (15 inches) and 2,108 mm (83 inches).	A, B, C
	2	Amber or red	Rear	One lamp on each side of the vertical centerline, as far apart as practicable.	Both on the same level, between 381 mm (15 inches) and 2,108 mm (83 inches).	A, B, C, D, E, F, G
Backup lamp. See footnote #14.	1 or 2	White	Rear	Rear	No requirement	A, B, C
Parking lamp	2	Amber or white	Front	One lamp on each side of the vertical centerline, as far apart as practicable.	Both on the same level, between 381 mm (15 inches) and 2,108 mm (83 inches).	A

Legend: Types of commercial motor vehicles shown in the last column of Table 1.
A. Buses and trucks less than 2,032 mm (80 inches) in overall width.
B. Buses and trucks 2,032 mm (80 inches) or more in overall width.
C. Truck tractors.
D. Semitrailers and full trailers 2,032 mm (80 inches) or more in overall width except converter dollies.
E. Converter dolly.
F. Semitrailers and full trailers less than 2,032 mm (80 inches) in overall width.
G. Pole trailers.
H. Projecting loads.

Note: Lamps and reflectors may be combined as permitted by § 393.22 and S5.4 of 49 CFR 571.108, Equipment combinations.

Footnote—1 Identification lamps may be mounted on the vertical centerline of the cab where different from the centerline of the vehicle, except where the cab is not more than 42 inches wide at the front roofline, then a single lamp at the center of the cab shall be deemed to comply with the requirements for identification lamps. No part of the identification lamps or their mountings may extend below the top of the vehicle windshield.

Footnote—2 Unless the turn signals on the front are so constructed (double-faced) and located as to be visible to passing drivers, two turn signals are required on the rear of the truck tractor, one at each side as far apart as practicable.

Footnote—3 The identification lamps need not be visible or lighted if obscured by a vehicle in the same combination.

Footnote—4 Any semitrailer or full trailer manufactured on or after March 1, 1979, shall be equipped with rear side-marker lamps at a height of not less than 381 mm (15 inches), and on the rear of trailers not more than 1,524 mm (60 inches) above the road surface, as measured from the center of the lamp on the vehicle at curb weight.

Footnote—5 Each converter dolly, when towed singly by another vehicle and not as part of a full trailer, shall be equipped with one stop lamp, one tail lamp, and two reflectors (one on each side of the vertical centerline, as far apart as practicable) on the rear. Each converter dolly shall be equipped with rear turn signals and vehicular hazard warning signal flasher lamps when towed singly by another vehicle and not as part of a full trailer, if the converter dolly obscures the turn signals at the rear of the towing vehicle.

Footnote—6 Pole trailers shall be equipped with two reflex reflectors on the rear, one on each side of the vertical centerline as far apart as practicable, to indicate the extreme width of the trailer.

Footnote—7 Pole trailers, when towed by motor vehicles with rear identification lamps meeting the requirements of § 393.11 and mounted at a height greater than the load being transported on the pole trailer, are not required to have rear identification lamps.

Footnote—8 Pole trailers shall have on the rearmost support for the load: (1) two front clearance lamps, one on each side of the vehicle, both on the same level and as high as practicable to indicate the overall width of the pole trailer; (2) two rear clearance lamps, one on each side of the vehicle, both on the same level and as high as practicable to indicate the overall width of the pole trailer; (3) two rear side marker lamps, one on each side of the vehicle, both on the same level, not less than 375 mm (15 inches) above the road surface; (4) two rear reflex reflectors, one on each side, both on the same level, not less than 375 mm (15 inches) above the road surface to indicate maximum width of the pole trailer; and (5) one red reflector on each side of the rearmost support for the load. Lamps and reflectors may be combined as allowed in § 393.22.

Footnote—9 Any motor vehicle transporting a load which extends more than 102 mm (4 inches) beyond the overall width of the motor vehicle shall be equipped with the following lamps in addition to other required lamps when operated during the hours when headlamps are required to be used.

(1) The foremost edge of that portion of the load which projects beyond the side of the vehicle shall be marked (at its outermost extremity) with an amber lamp visible from the front and side.

(2) The rearmost edge of that portion of the load which projects beyond the side of the vehicle shall be marked (at its outermost extremity) with a red lamp visible from the rear and side.

(3) If the projecting load does not measure more than 914 mm (3 feet) from front to rear, it shall be marked with an amber lamp visible from the front, both sides, and rear, except that if the projection is located at or near the rear it shall be marked by a red lamp visible from front, side, and rear.

Footnote—10 Projections beyond rear of motor vehicles. Motor vehicles transporting loads which extend more than 1,219 mm (4 feet) beyond the rear of the motor vehicle, or which have tailboards or tailgates extending more than 1,219 mm (4 feet) beyond the body, shall have these projections marked as follows when the vehicle is operated during the hours when headlamps are required to be used:

(1) On each side of the projecting load, one red side marker lamp, visible from the side, located so as to indicate maximum overhang.

(2) On the rear of the projecting load, two red lamps, visible from the rear, one at each side; and two red reflectors visible from the rear, one at each side, located so as to indicate maximum width.

Footnote—11 To be illuminated when tractor headlamps are illuminated.

Footnote—12 Every bus, truck, and truck tractor shall be equipped with a signaling system that, in addition to signaling turning movements, shall have a switch or combination of switches that will cause the two front turn signals and the two rear signals to flash simultaneously as a vehicular traffic signal warning, required by § 392–22(a). The system shall be capable of flashing simultaneously with the ignition of the vehicle on or off.

Footnote—13 To be actuated upon application of service brakes.

Footnote—14 Backup lamp required to operate when bus, truck, or truck tractor is in reverse.

Footnote—15

(1) For the purposes of Section 393.11, the term ''overall width'' refers to the nominal design dimension of the widest part of the vehicle, exclusive of the signal lamps, marker lamps, outside rearview mirrors, flexible fender extensions, and mud flaps.

(2) Clearance lamps may be mounted at a location other than on the front and rear if necessary to indicate the overall width of a vehicle, or for protection from damage during normal operation of the vehicle.

(3) On a trailer, the front clearance lamps may be mounted at a height below the extreme height if mounting at the extreme height results in the lamps failing to mark the overall width of the trailer.

(4) On a truck tractor, clearance lamps mounted on the cab may be located to indicate the width of the cab, rather than the width of the vehicle.

(5) When the rear identification lamps are mounted at the extreme height of a vehicle, rear clearance lamps are not required to be located as close as practicable to the top of the vehicle.

Footnote—16 A trailer subject to this part that is less than 1829 mm (6 feet) in overall length, including the trailer tongue, need not be equipped with front side marker lamps and front side reflex reflectors.

Footnote—17 A boat trailer subject to this part whose overall width is 2032 mm (80 inches) or more need not be equipped with both front and rear clearance lamps provided an amber (front) and red (rear) clearance lamp is located at or near the midpoint on each side so as to indicate its extreme width.

BILLING CODE 4910–EX–P

Figure 1 - Truck Tractor Illustration for § 393.11

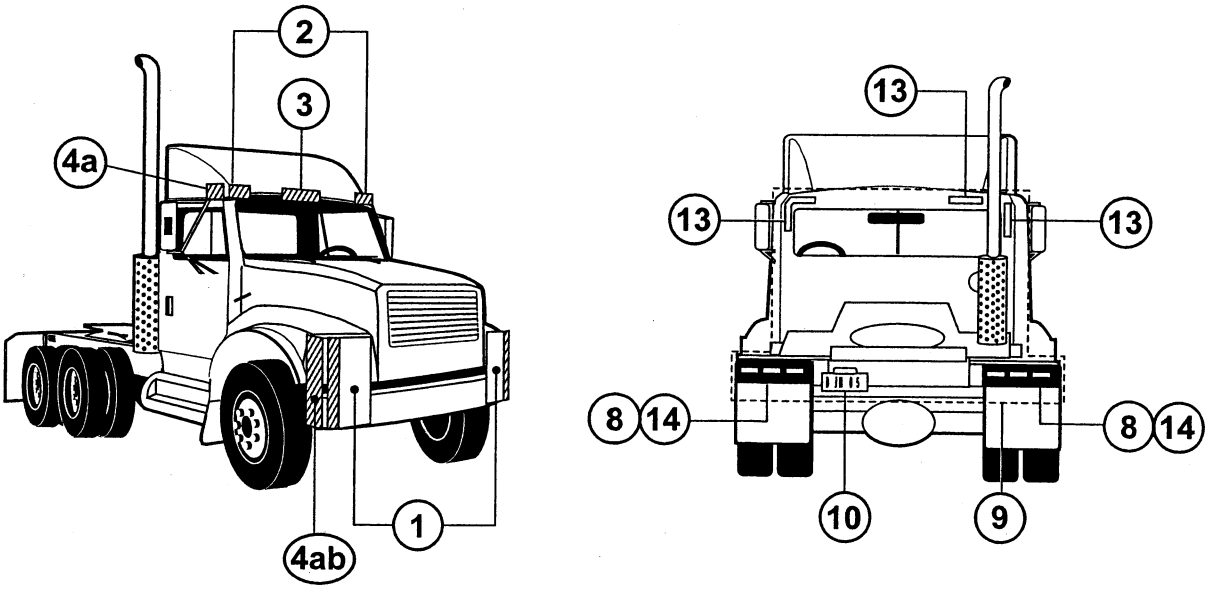

Figure 2 - Straight Truck Illustration for § 393.11

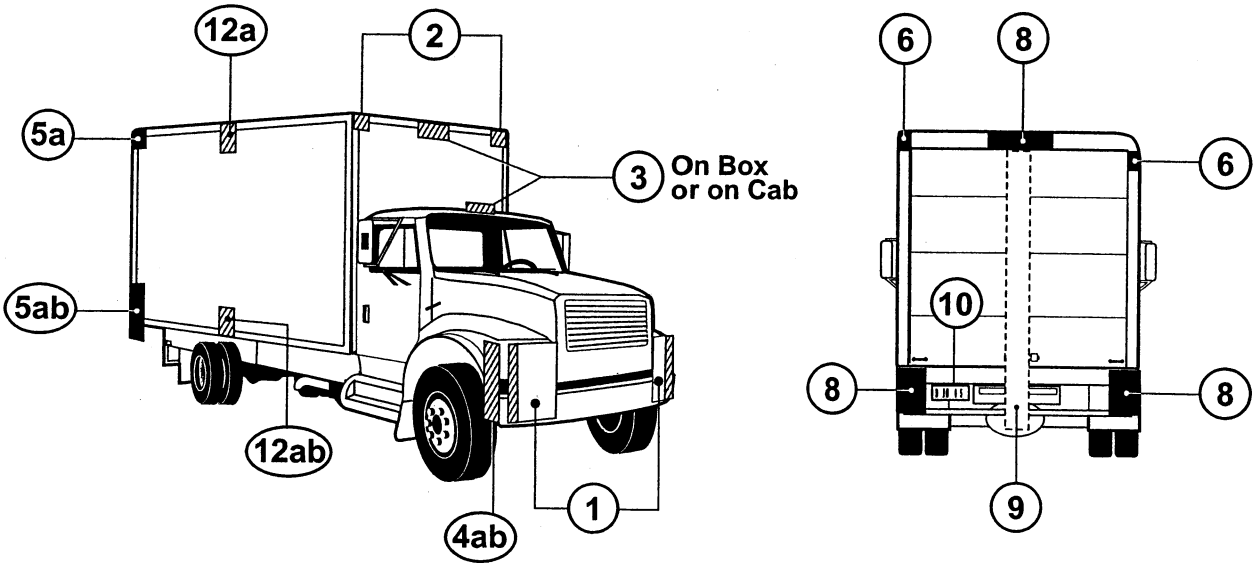

Figure 3 - Straight Truck Illustration for § 393.11

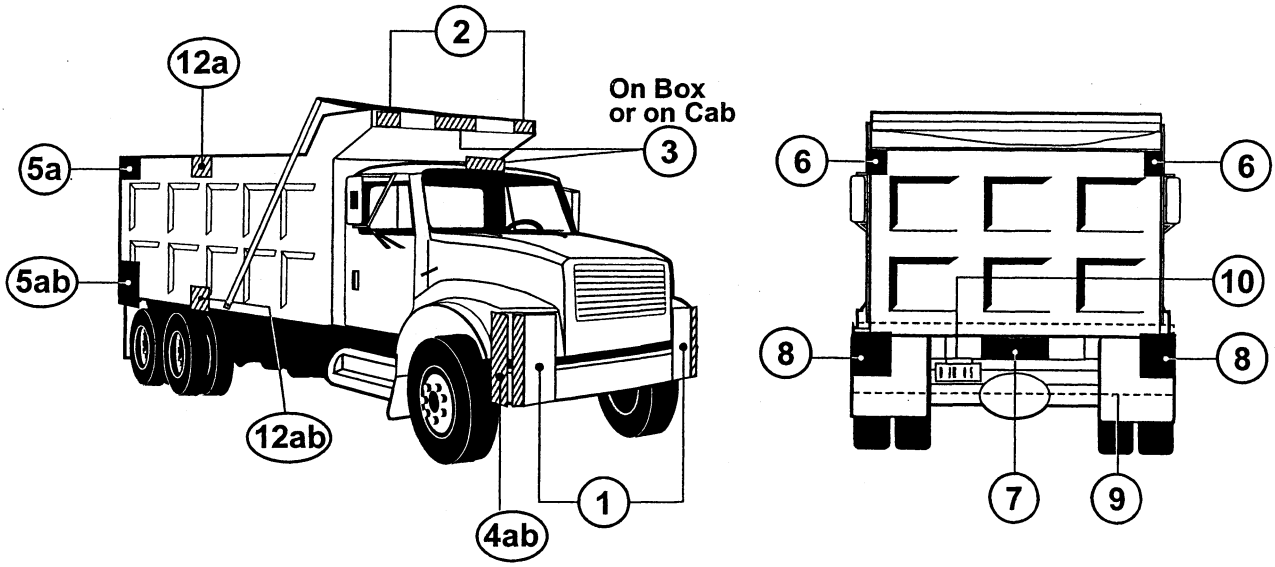

Figure 4 - Straight Truck Illustration for § 393.11

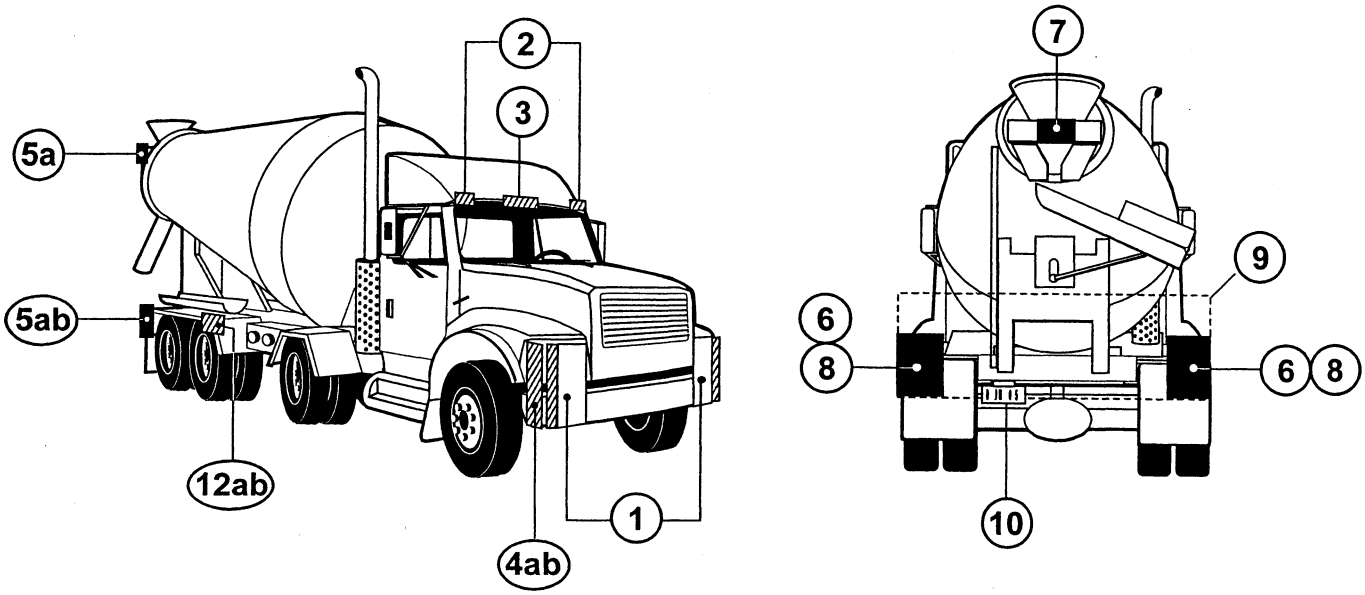

Figure 5 - Straight Truck Illustration for § 393.11

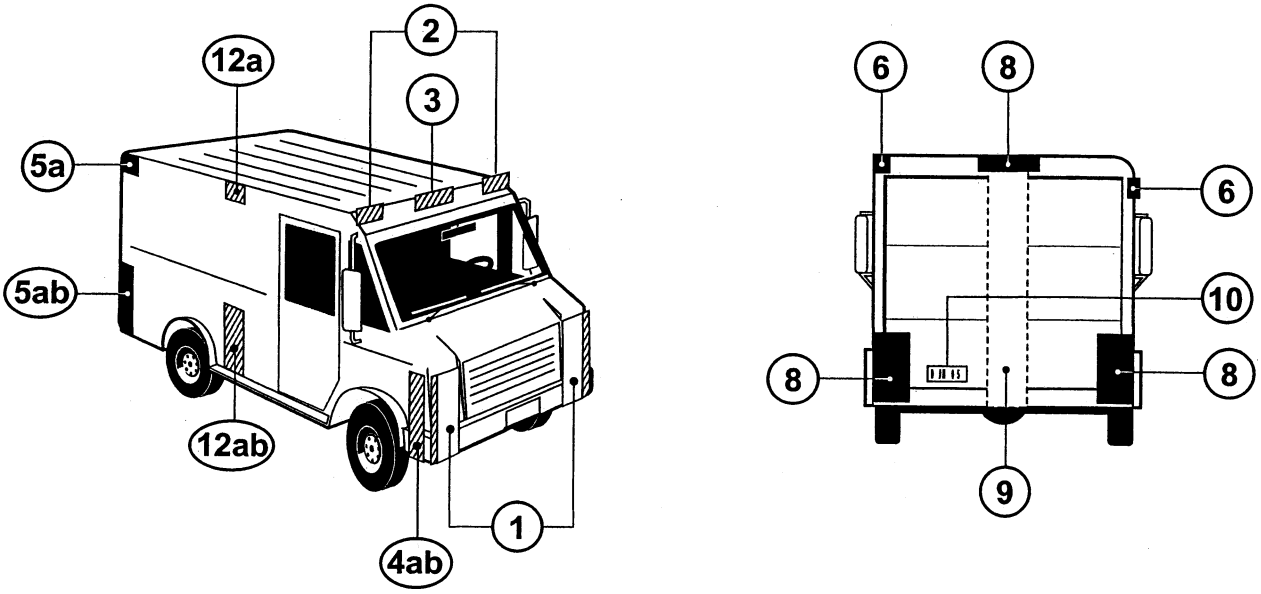

Figure 6 - Straight Truck Illustration for § 393.11

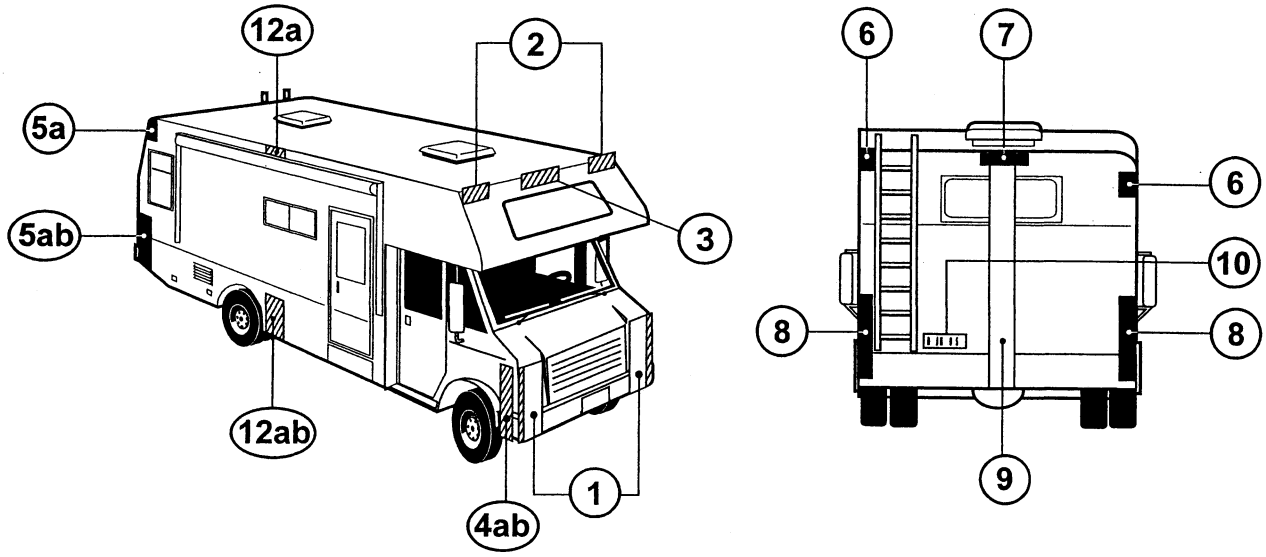

Figure 7 - Bus Illustration for § 393.11

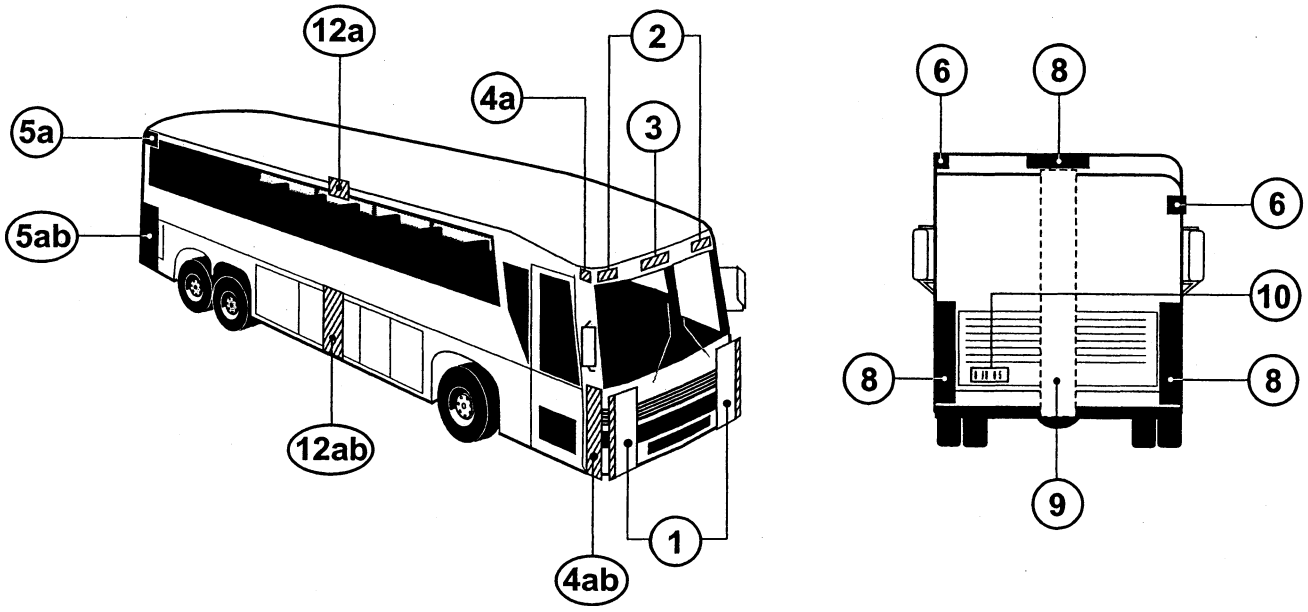

LEGEND FOR FIGURES 1 THROUGH 7 - 49 CFR 393.11
TRUCK & BUS VEHICLE ILLUSTRATIONS
(DOES NOT APPLY TO FIGURES 8 THROUGH 18 FOR TRAILERS)

Area	Equipment
1	Headlamps - Lower Beam
	Headlamps - Upper Beam
	Parking Lamps - Attention: *Required only on vehicles less than 2032mm wide*
	Front Turn Signal/Hazard Warning Lamps
2	Front Clearance Lamps - Attention: *Required for vehicles 2032mm wide or wider*
3	Front Identification Lamps (ID)
4a	Front Side Marker Lamps
4b	Front Side Reflex Reflectors
5a	Rear Side Marker Lamps - *Not required on Truck Tractors*
5b	Rear Side Reflex Reflectors - *Not required on Truck Tractors*
6	Rear Clearance Lamps Attention: *Required for vehicles 2032mm wide or wider, but not required on Truck Tractors*
7	Rear Identification Lamps (ID) Attention: *Required for vehicles 2032mm wide or wider, but not required on Truck Tractors*
8	Tail Lamps
	Stop Lamps
	Rear Turn Signal/Hazard Warning Lamps
	Rear Reflex Reflectors
9	Backup Lamp
10	License Plate Lamp
11	Center High Mounted Stop Lamp Attention: *Required for vehicles less than 2032mm wide and 4536kg*

ADDITIONAL EQUIPMENT FOR SPECIFIC TRUCKS AND BUS VEHICLES

Area	Equipment
12a	Intermediate Side Marker Lamps
12b	Intermediate Side Reflex Relectors

TRUCK TRACTORS

	DESCRIPTION
Area	Conspicuity Treatment
13	Rear Upper Body Marking
14	Rear Marking

Figure 8 - Semi-Trailer Illustration for § 393.11

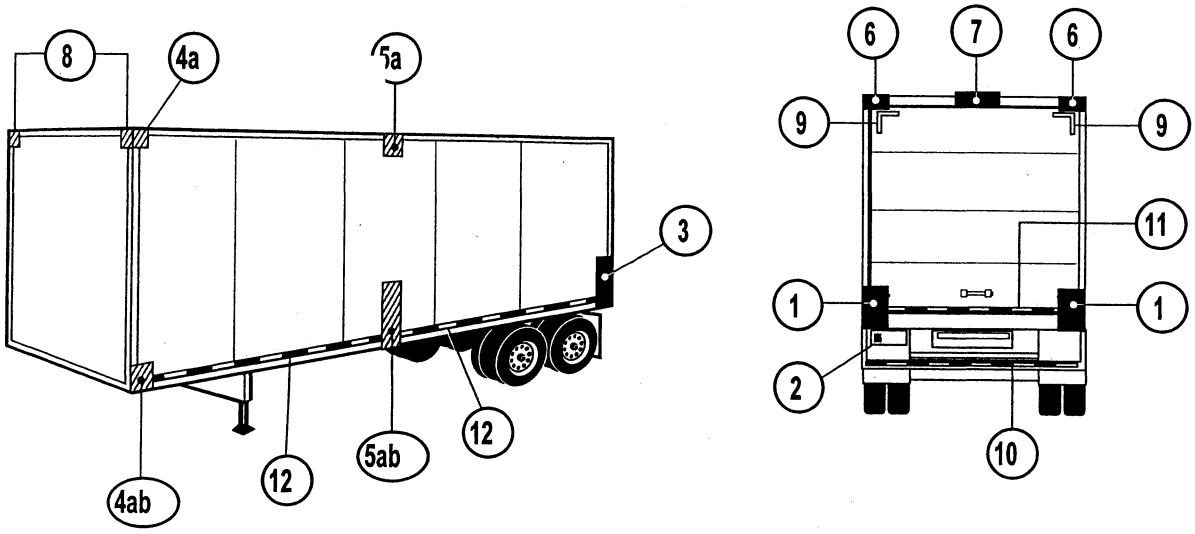

Figure 9 - Semi-Trailer Illustration for § 393.11

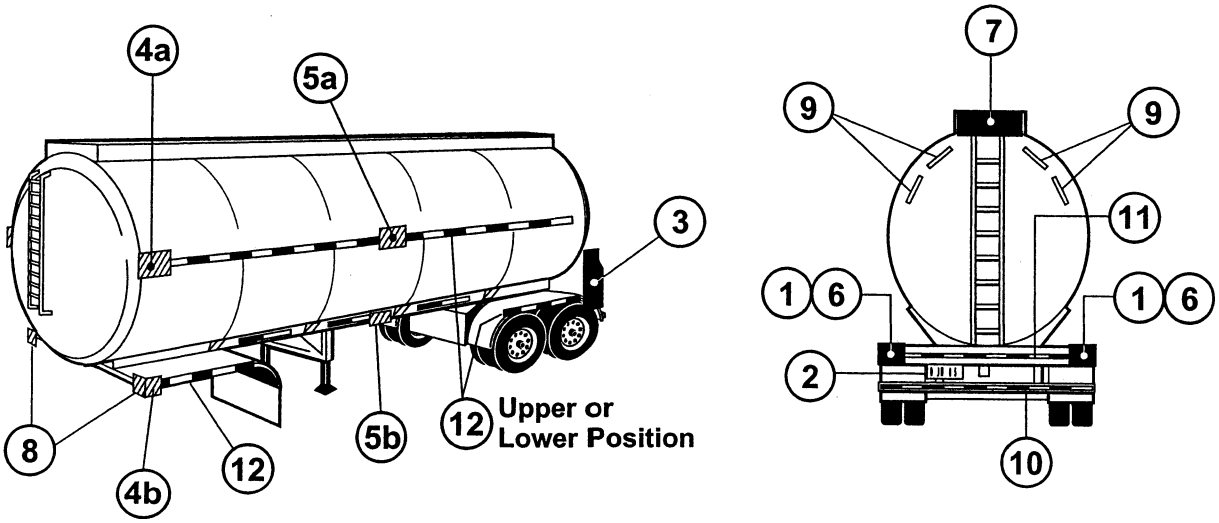

Figure 10 - Semi-Trailer Illustration for § 393.11

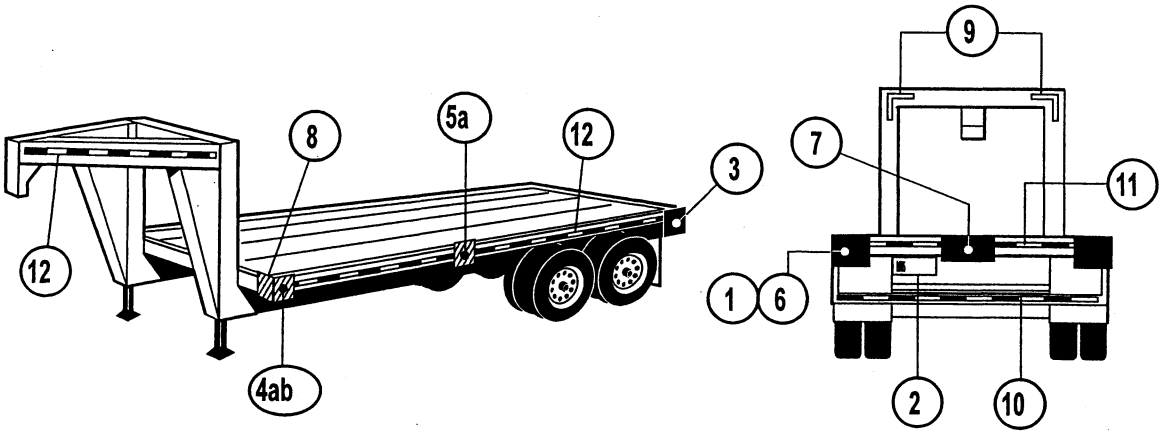

Figure 11 - Container Chassis Illustration for § 393.11

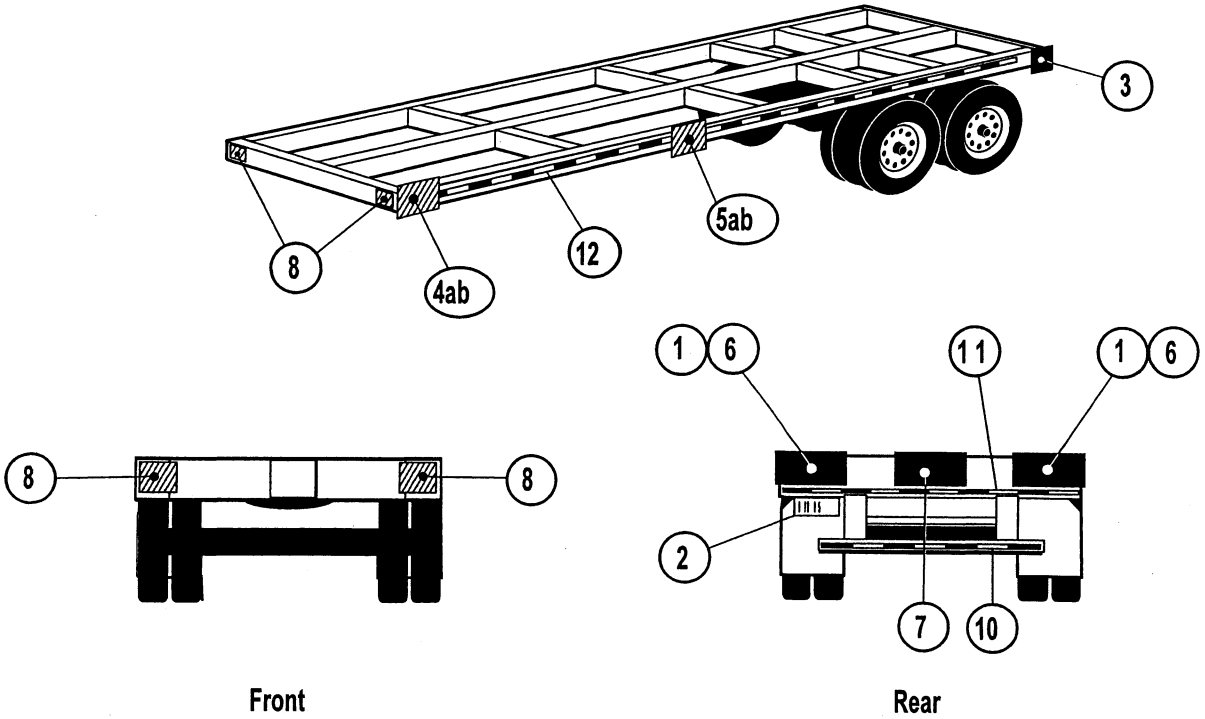

Figure 12 - Pole Trailer Illustration for § 393.11 - All Vehicle Widths

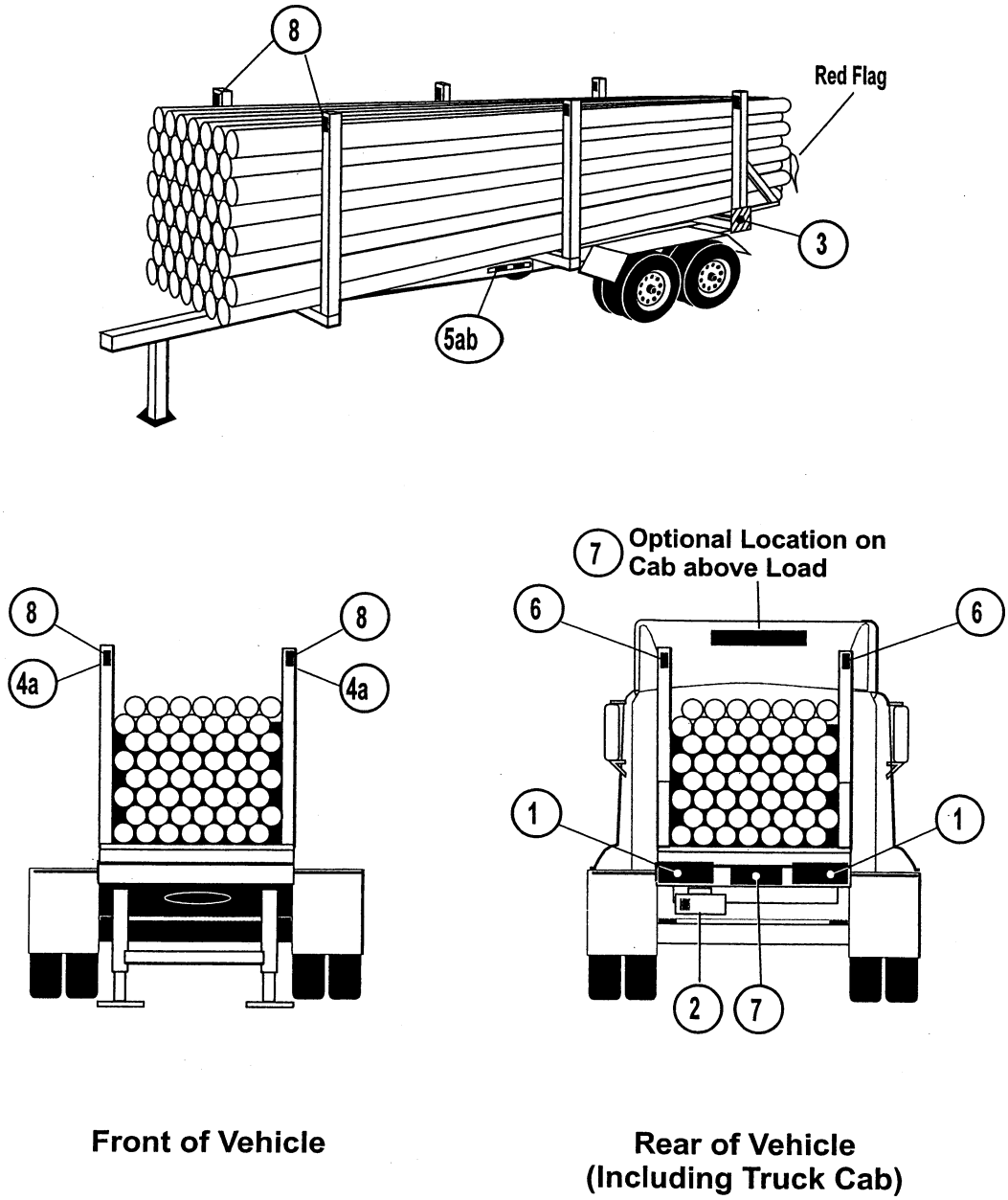

Figure 13 - Converter Dolly Illustration for § 393.11

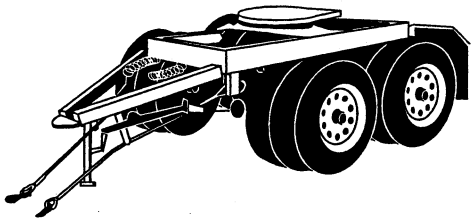

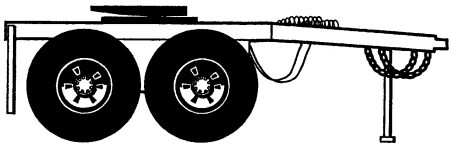

Side View of Dolly

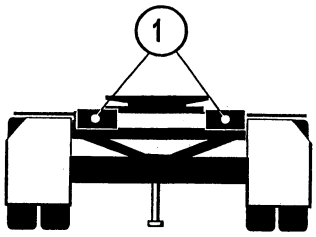

Rear

Figure 14 - Semi-Trailer Illustration for § 393.11

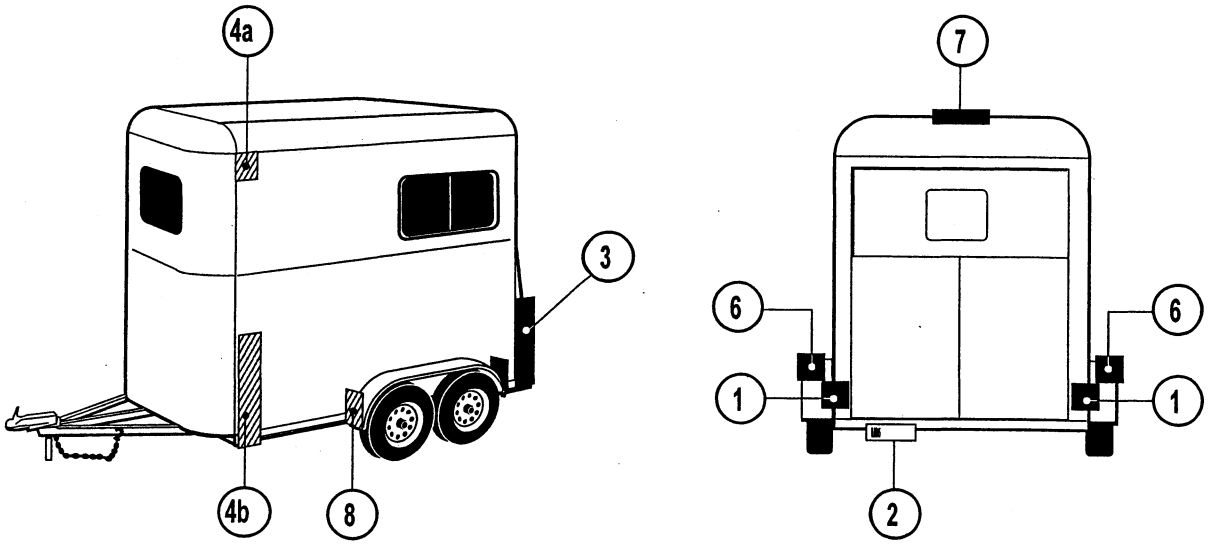

Figure 15 - Semi-Trailer Illustration for § 393.11

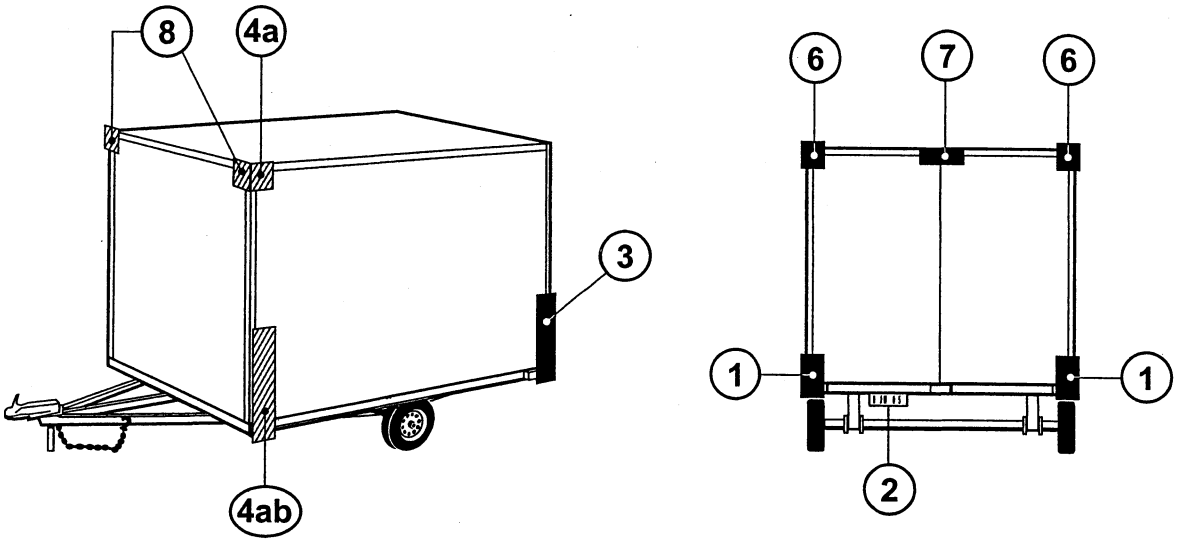

Figure 16 - Semi-Trailer Illustration for § 393.11

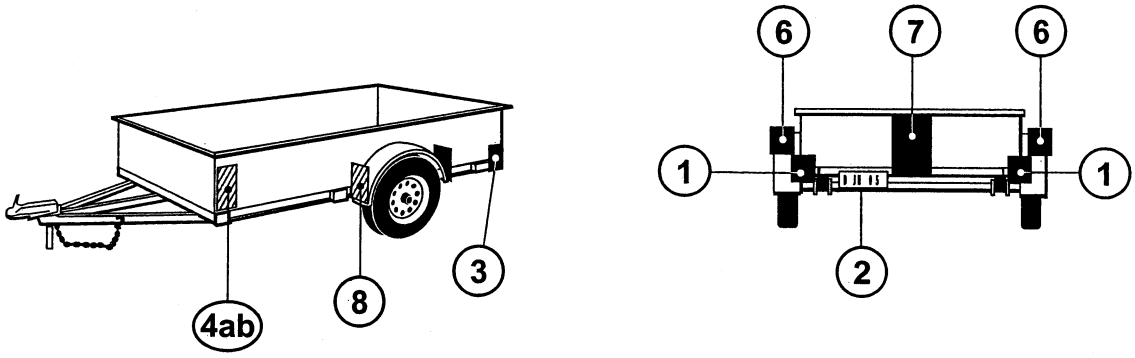

Figure 17 - Semi-Trailer Illustration for § 393.11

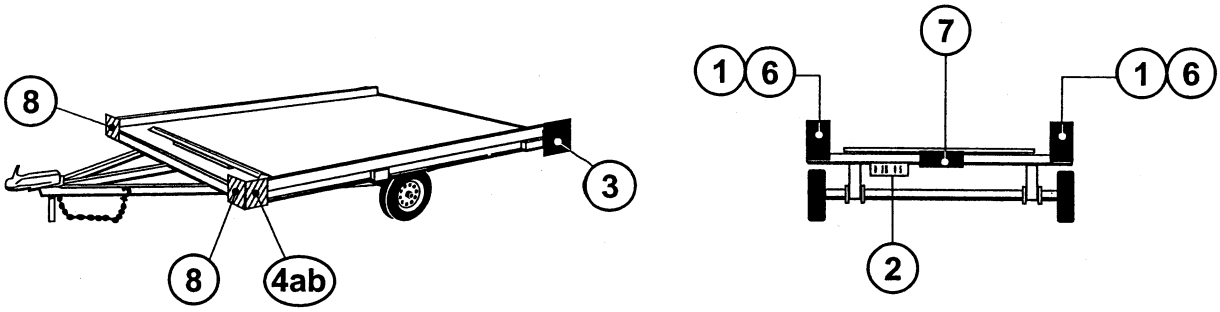

Figure 18 - Semi-Trailer Illustration for § 393.11

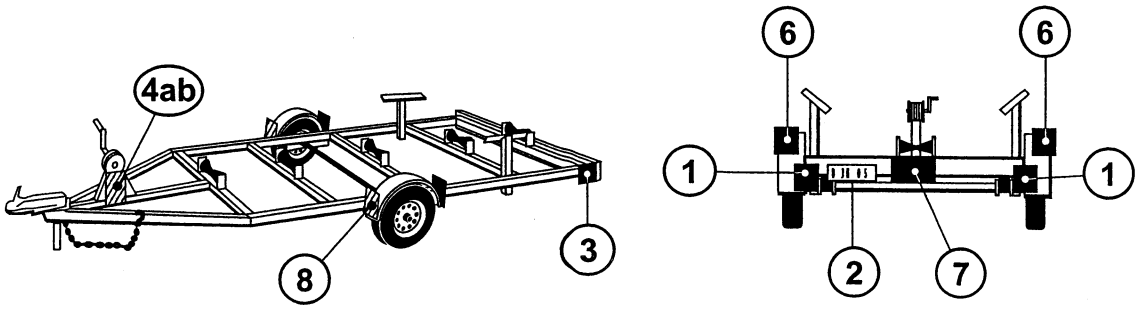

LEGEND FOR FIGURES 8 THROUGH 18 - 49 CFR 393.11 TRAILER ILLUSTRATIONS

(DOES NOT APPLY TO FIGURES 1 THROUGH 7 FOR TRUCKS & BUSES)

Area	Equipment
1	Tail Lamps
	Stop Lamps
	Rear Turn Signal Lamps
	Rear Reflex Reflectors
2	License Plate Lamp (s)
3	Rear Side Marker Lamps
	Rear Side Reflex Reflectors
4a	Front Side Marker Lamps
4b	Front Side Reflex Reflectors

ADDITIONAL EQUIPMENT FOR TRAILERS EXCEEDING THE FOLLOWING PARAMETERS

LENGTH 9.1 m (30 ft.) OR LONGER

Area	Equipment
5a	Intermediate Side Marker Lamps
5b	Intermediate Side Reflex Reflectors

WIDTH 2.032 m (80 in.) OR WIDER

Area	Equipment
6	Rear Clearance Lamps
7	Rear Identification Lamps
8	Front Clearance Lamps

WIDTH 2.032 m (80 in.) OR WIDER AND GVWR 4,536 kg (10,000 lb.) OR MORE

	DESCRIPTION
Area	Conspicuity Treatment
9	Rear Upper Body Marking
10	Bumper Bar Marking
11	Rear Lower Body Marking
12	Side Marking

■ 12. Section 393.17 is amended by revising the illustrations at the end of the section to read as follows:

§ 393.17 Lamp and reflectors—combinations in driveway-towaway operation.

* * * * *

Figure 19 - Single-Saddle-Mount Diagram to Illustrate § 393.17

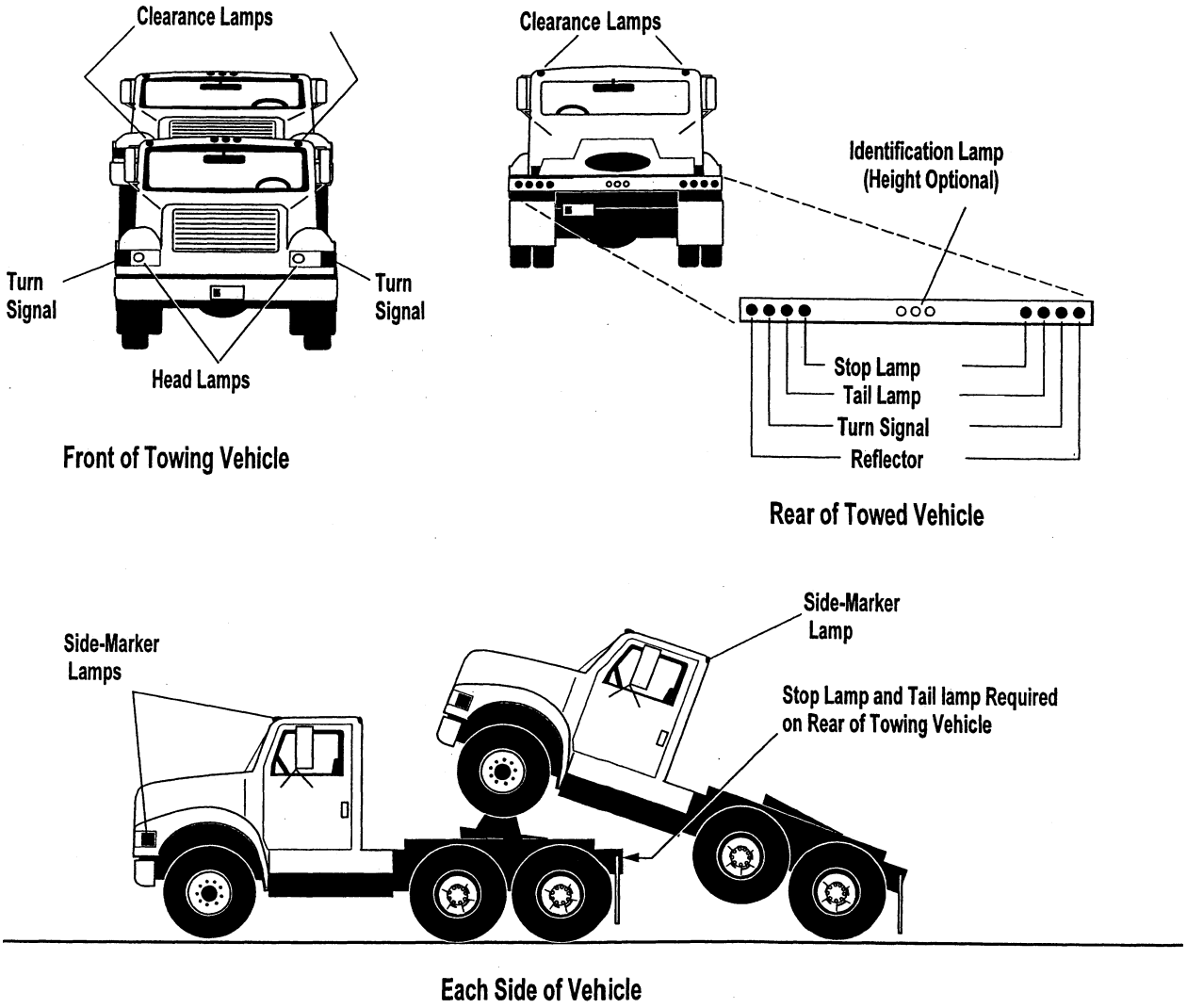

Lamps may be combined as permitted by § 393.22. The color of exterior lighting devices and reflectors shall conform to requirements of § 393.11

Figure 20 - Double-Saddle-Mount Diagram to Illustrate § 393.17

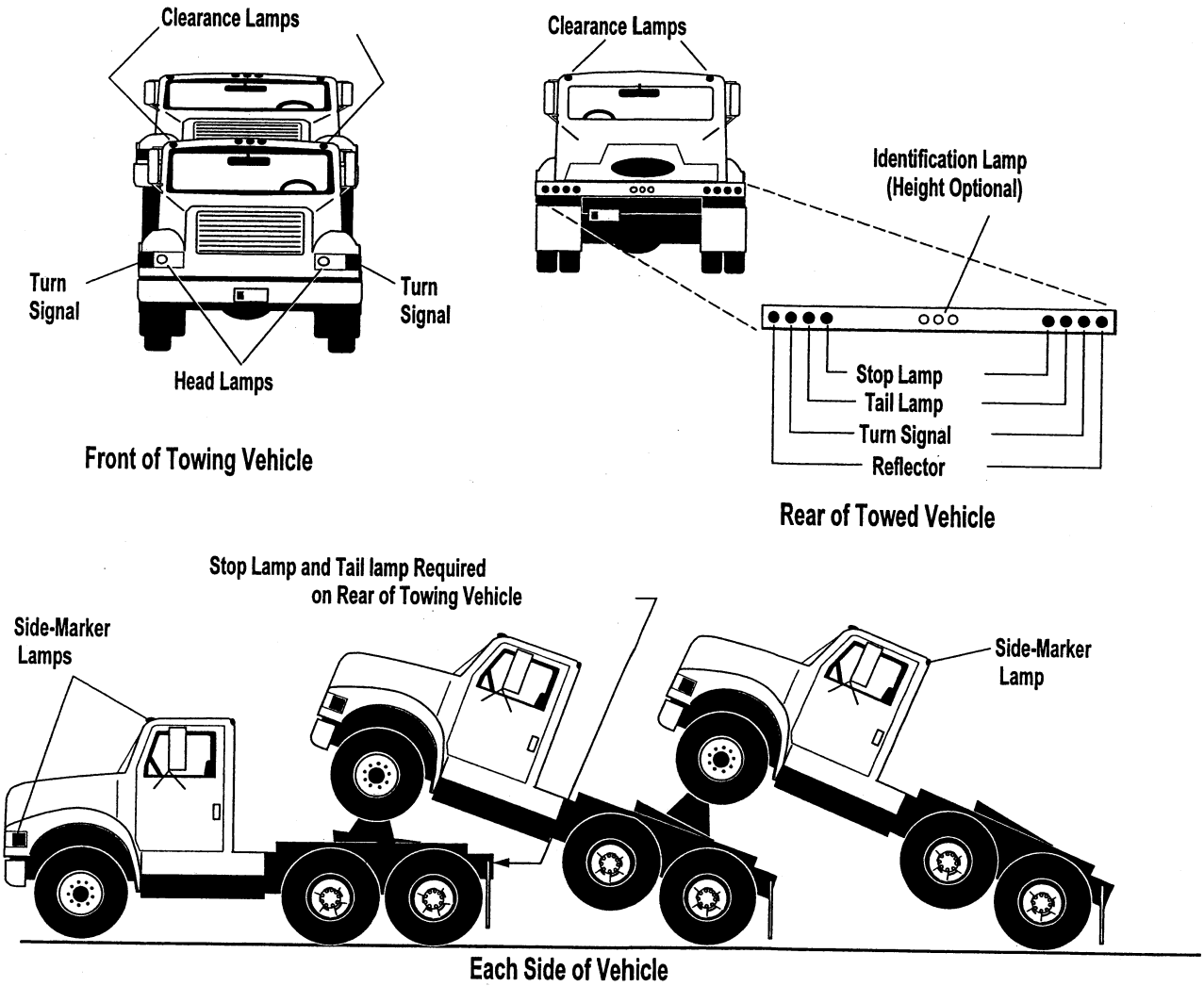

Lamps may be combined as permitted by § 393.22. The color of exterior lighting devices and reflectors shall conform to requirements of § 393.11

Figure 21 - Tow-bar Diagram to Illustrate § 393.17

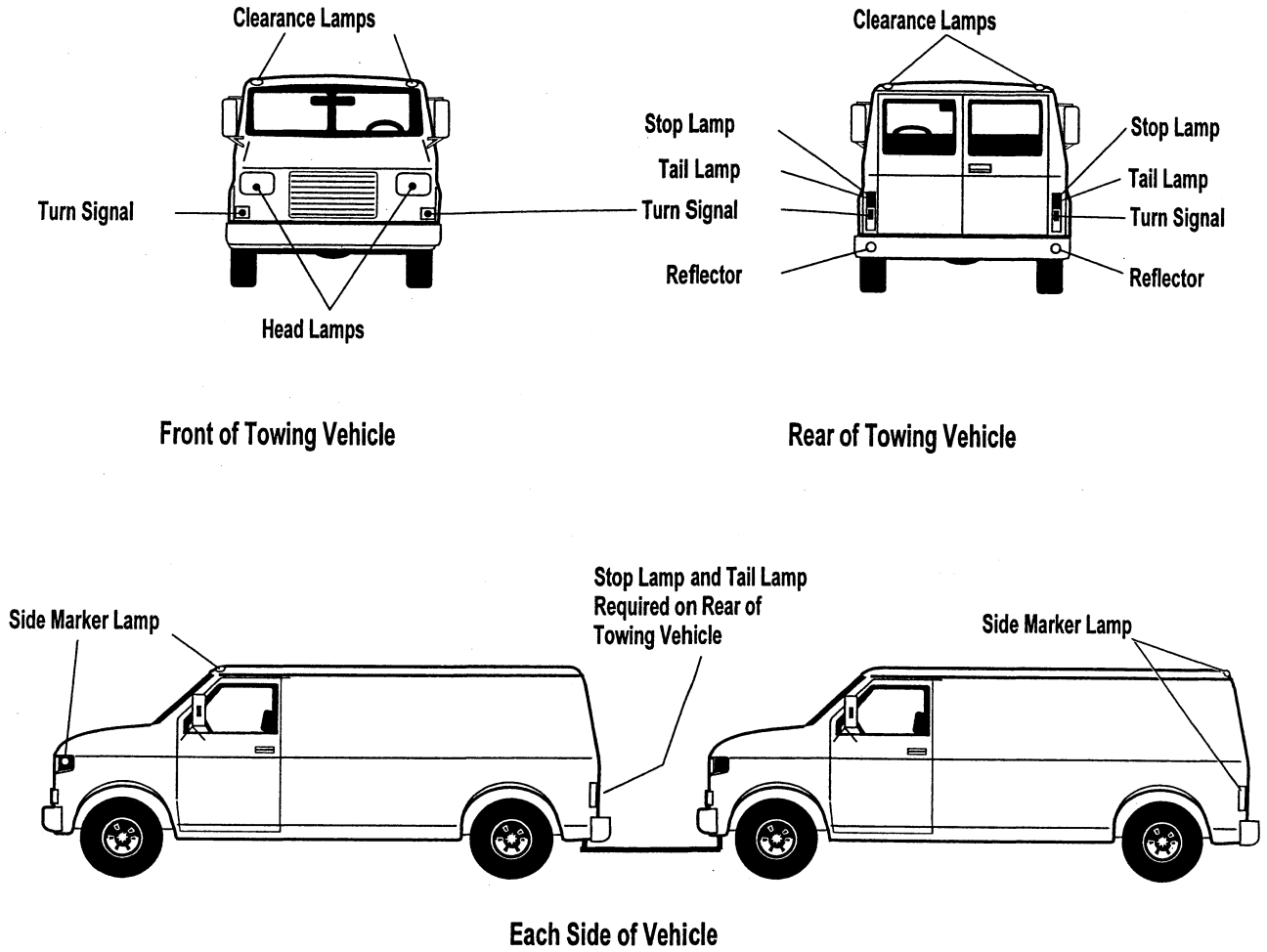

Lamps may be combined as permitted by § 393.22. The color of exterior lighting devices and reflectors shall conform to requirements of § 393.11

BILLING CODE 4910–EX–C

■ 13. Section 393.19 is revised to read as follows:

§ 393.19 Hazard warning signals.

The hazard warning signal operating unit on each commercial motor vehicle shall operate independently of the ignition or equivalent switch, and when activated, cause all turn signals required by § 393.11 to flash simultaneously.

§ 393.20 [Removed]

■ 14. Section 393.20 is removed and reserved.

■ 15. Section 393.23 is revised to read as follows:

§ 393.23 Power supply for lamps.

All required lamps must be powered by the electrical system of the motor vehicle with the exception of battery powered lamps used on projecting loads.

■ 16. Section 393.24 is revised to read as follows:

§ 393.24 Requirements for head lamps, auxiliary driving lamps and front fog lamps.

(a) *Headlamps.* Every bus, truck and truck tractor shall be equipped with headlamps as required by § 393.11(a). The headlamps shall provide an upper and lower beam distribution of light, selectable at the driver's will and be steady-burning. The headlamps shall be marked in accordance with FMVSS No. 108. Auxiliary driving lamps and/or front fog lamps may not be used to satisfy the requirements of this paragraph.

(b) *Auxiliary driving lamps and front fog lamps.* Commercial motor vehicles may be equipped with auxiliary driving lamps and/or front fog lamps for use in conjunction with, but not in lieu of the required headlamps. Auxiliary driving lamps shall meet SAE Standard J581 Auxiliary Upper Beam Lamps, July 2004, and front fog lamps shall meet SAE Standard J583 Front Fog Lamp, August 2004. (See § 393.7 for information on the incorporation by reference and availability of these documents.)

(c) *Mounting.* Headlamps shall be mounted and aimable in accordance with FMVSS No. 108. Auxiliary driving

lamps and front fog lamps shall be mounted so that the beams are aimable and the mounting shall prevent the aim of the lighting device from being disturbed while the vehicle is operating on public roads.

(d) *Aiming.* Headlamps, auxiliary driving lamps and front fog lamps shall be aimed to meet the aiming specifications in FMVSS No. 108 (49 CFR 571.108), SAE J581, and SAE J583, respectively.

■ 17. Section 393.25 is revised to read as follows:

§ 393.25 Requirements for lamps other than head lamps.

(a) *Mounting.* All lamps shall be securely mounted on a rigid part of the vehicle. Temporary lamps must be securely mounted to the load and are not required to be mounted to a permanent part of the vehicle.

(b) *Visibility.* Each lamp shall be located so that it meets the visibility requirements specified by FMVSS No. 108 in effect at the time of manufacture of the vehicle. Vehicles which were not subject to FMVSS No. 108 at the time of manufacture shall have each lamp located so that it meets the visibility requirements specified in the SAE standards listed in paragraph (c) of this section. If motor vehicle equipment (*e.g.*, mirrors, snow plows, wrecker booms, backhoes, and winches) prevents compliance with this paragraph by any required lamp, an auxiliary lamp or device meeting the requirements of this paragraph shall be provided. This shall not be construed to apply to lamps on one unit which are obscured by another unit of a combination of vehicles.

(c) *Specifications.* All required lamps (except marker lamps on projecting loads, lamps which are temporarily attached to vehicles transported in driveaway-towaway operations, and lamps on converter dollies and pole trailers) on vehicles manufactured on or after December 25, 1968, shall, at a minimum, meet the applicable requirements of FMVSS No. 108 in effect on the date of manufacture of the vehicle. Marker lamps on projecting loads, all lamps which are temporarily attached to vehicles transported in driveaway-towaway operations, and all lamps on converter dollies and pole trailers must meet the following applicable SAE standards: J586—Stop Lamps for Use on Motor Vehicles Less Than 2032 mm in Overall Width, March 2000; J2261 Stop Lamps and Front- and Rear-Turn Signal Lamps for Use on Motor Vehicles 2032 mm or More in Overall Width, January 2002; J585—Tail Lamps (Rear Position Lamps) for Use on Motor Vehicles Less Than 2032 mm in Overall Width, March 2000; J588—Turn Signal Lamps for Use on Motor Vehicles Less Than 2032 mm in Overall Width, March 2000; J2040—Tail Lamps (Rear Position Lamps) for Use on Vehicles 2032 mm or More in Overall Width, March 2002; J592—Sidemarker Lamps for Use on Road Vehicles Less Than 2032 mm in Overall Width, August 2000. (See § 393.7 for information on the incorporation by reference and availability of these documents.)

(d) (Reserved)

(e) *Lamps to be steady-burning.* All exterior lamps (both required lamps and any additional lamps) shall be steady-burning with the exception of turn signal lamps; hazard warning signal lamps; school bus warning lamps; amber warning lamps or flashing warning lamps on tow trucks and commercial motor vehicles transporting oversized loads; and warning lamps on emergency and service vehicles authorized by State or local authorities. Lamps combined into the same shell or housing with a turn signal are not required to be steady burning while the turn signal is in use. Amber warning lamps must meet SAE J845—Optical Warning Devices for Authorized Emergency, Maintenance and Service Vehicles, May 1997. Amber flashing warning lamps must meet SAE J595—Directional Flashing Optical Warning Devices for Authorized Emergency, Maintenance and Service Vehicles, January 2005. Amber gaseous discharge warning lamps must meet SAE J1318 Gaseous Discharge Warning Lamp for Authorized Emergency, Maintenance, and Service Vehicles, May 1998. (See § 393.7(b) for information on the incorporation by reference and availability of these documents.)

(f) *Stop lamp operation.* The stop lamps on each vehicle shall be activated upon application of the service brakes. The stop lamps are not required to be activated when the emergency feature of the trailer brakes is used or when the stop lamp is optically combined with the turn signal and the turn signal is in use.

■ 18. Section 393.26 is amended by revising paragraphs (a), (b), (c), and (d) introductory text to read as follows:

§ 393.26 Requirements for reflex reflectors.

(a) *Mounting.* Reflex reflectors shall be mounted at the locations required by § 393.11. In the case of motor vehicles so constructed that requirement for a 381 mm (15-inch) minimum height above the road surface is not practical, the reflectors shall be mounted as close as practicable to the required mounting height range. All permanent reflex reflectors shall be securely mounted on a rigid part of the vehicle. Temporary reflectors on projecting loads must be securely mounted to the load and are not required to be permanently mounted to a part of the vehicle. Temporary reflex reflectors on vehicles transported in driveaway-towaway operations must be firmly attached.

(b) *Specifications.* All required reflex reflectors (except reflex reflectors on projecting loads, vehicles transported in a driveaway-towaway operation, converter dollies and pole trailers) on vehicles manufactured on or after December 25, 1968, shall meet the applicable requirements of FMVSS No. 108 in effect on the date of manufacture of the vehicle. Reflex reflectors on projecting loads, vehicles transported in a driveaway-towaway operation, and all reflex reflectors on converter dollies and pole trailers must conform to SAE J594—Reflex Reflectors, December 2003.

(c) *Substitute material for side reflex reflectors.* Reflective material conforming to ASTM D 4956–04, Standard Specification for Retroreflective Sheeting for Traffic Control, may be used in lieu of reflex reflectors if the material as used on the vehicle, meets the performance standards in either Table I of SAE J594 or Table IA of SAE J594—Reflex Reflectors, December 2003. (See § 393.7(b) for information on the incorporation by reference and availability of these documents.)

(d) *Use of additional retroreflective surfaces.* Additional retroreflective surfaces may be used in conjunction with, but not in lieu of the reflex reflectors required in subpart B of part 393, and the substitute material for side reflex reflectors allowed by paragraph (c) of this section, provided:

* * * * *

§ 393.27 [Removed]

■ 18a. Section 393.27 is removed and reserved.

■ 19. Section 393.28 is revised to read as follows:

§ 393.28 Wiring systems.

Electrical wiring shall be installed and maintained to conform to SAE J1292—Automobile, Truck, Truck-Tractor, Trailer, and Motor Coach Wiring, October 1981, except the jumper cable plug and receptacle need not conform to SAE J560. The reference to SAE J1292 shall not be construed to require circuit protection on trailers. (See § 393.7(b) for information on the incorporation by reference and availability of this document.)

§ 393.29 [Removed]

■ 19a. Section 393.29 is removed and reserved.

■ 20. Sections 393.31, 393.32, and 393.33 are removed and reserved.

■ 21. Section 393.40 is revised to read as follows:

§ 393.40 Required brake systems.

(a) Each commercial motor vehicle must have brakes adequate to stop and hold the vehicle or combination of motor vehicles. Each commercial motor vehicle must meet the applicable service, parking, and emergency brake system requirements provided in this section.

(b) Service brakes. (1) *Hydraulic brake systems.* Motor vehicles equipped with hydraulic brake systems and manufactured on or after September 2, 1983, must, at a minimum, have a service brake system that meets the requirements of FMVSS No. 105 in effect on the date of manufacture. Motor vehicles which were not subject to FMVSS No. 105 on the date of manufacture must have a service brake system that meets the applicable requirements of §§ 393.42, 393.48, 393.49, 393.51, and 393.52 of this subpart.

(2) *Air brake systems.* Buses, trucks and truck-tractors equipped with air brake systems and manufactured on or after March 1, 1975, and trailers manufactured on or after January 1, 1975, must, at a minimum, have a service brake system that meets the requirements of FMVSS No. 121 in effect on the date of manufacture. Motor vehicles which were not subject to FMVSS No. 121 on the date of manufacture must have a service brake system that meets the applicable requirements of §§ 393.42, 393.48, 393.49, 393.51, and 393.52 of this subpart.

(3) *Vacuum brake systems.* Motor vehicles equipped with vacuum brake systems must have a service brake system that meets the applicable requirements of §§ 393.42, 393.48, 393.49, 393.51, and 393.52 of this subpart.

(4) *Electric brake systems.* Motor vehicles equipped with electric brake systems must have a service brake system that meets the applicable requirements of §§ 393.42, 393.48, 393.49 and 393.52 of this subpart.

(c) *Parking brakes.* Each commercial motor vehicle must be equipped with a parking brake system that meets the applicable requirements of § 393.41.

(d) Emergency brakes—partial failure of service brakes.

(1) *Hydraulic brake systems.* Motor vehicles manufactured on or after September 2, 1983, and equipped with a split service brake system must, at a minimum, meet the partial failure requirements of FMVSS No. 105 in effect on the date of manufacture.

(2) *Air brake systems.* Buses, trucks and truck tractors manufactured on or after March 1, 1975, and trailers manufactured on or after January 1, 1975, must be equipped with an emergency brake system which, at a minumum, meets the requirements of FMVSS No. 121 in effect on the date of manufacture.

(3) *Vehicles not subject to FMVSS Nos. 105 and 121 on the date of manufacture.* Buses, trucks and truck tractors not subject to FMVSS Nos. 105 or 121 on the date of manufacture must meet the requirements of § 393.40(e). Trailers not subject to FMVSS No. 121 at the time of manufacture must meet the requirements of § 393.43.

(e) Emergency brakes, vehicles manufactured on or after July 1, 1973. (1) A bus, truck, truck tractor, or a combination of motor vehicles manufactured on or after July 1, 1973, and not covered under paragraphs (d)(1) or (d)(2) of this section, must have an emergency brake system which consists of emergency features of the service brake system or an emergency system separate from the service brake system. The emergency brake system must meet the applicable requirements of §§ 393.43 and 393.52.

(2) A control by which the driver applies the emergency brake system must be located so that the driver can operate it from the normal seating position while restrained by any seat belts with which the vehicle is equipped. The emergency brake control may be combined with either the service brake control or the parking brake control. However, all three controls may not be combined.

(f) *Interconnected systems.* (1) If the brake systems required by § 393.40(a) are interconnected in any way, they must be designed, constructed, and maintained so that in the event of a failure of any part of the operating mechanism of one or more of the systems (except the service brake actuation pedal or valve), the motor vehicle will have operative brakes and, for vehicles manufactured on or after July 1, 1973, be capable of meeting the requirements of § 393.52(b).

(2) A motor vehicle to which the requirements of FMVSS No. 105 (S5.1.2), dealing with partial failure of the service brake, applied at the time of manufacture meets the requirements of § 393.40(f)(1) if the motor vehicle is maintained in conformity with FMVSS No. 105 and the motor vehicle is capable of meeting the requirements of § 393.52(b), except in the case of a structural failure of the brake master cylinder body.

(3) A bus is considered to meet the requirements of § 393.40(f)(1) if it meets the requirements of § 393.44 and § 393.52(b).

■ 22. Section 393.41 is revised to read as follows:

§ 393.41 Parking brake system.

(a) *Hydraulic-braked vehicles manufactured on or after September 2, 1983.* Each truck and bus (other than a school bus) with a GVWR of 4,536 kg (10,000 pounds) or less which is subject to this part and school buses with a GVWR greater than 4,536 kg (10,000 pounds) shall be equipped with a parking brake system as required by FMVSS No. 571.105 (S5.2) in effect at the time of manufacture. The parking brake shall be capable of holding the vehicle or combination of vehicles stationary under any condition of loading in which it is found on a public road (free of ice and snow). Hydraulic-braked vehicles which were not subject to the parking brake requirements of FMVSS No. 571.105 (S5.2) must be equipped with a parking brake system that meets the requirements of paragraph (c) of this section.

(b) *Air-braked power units manufactured on or after March 1, 1975, and air-braked trailers manufactured on or after January 1, 1975.*

Each air-braked bus, truck and truck tractor manufactured on and after March 1, 1975, and each air-braked trailer except an agricultural commodity trailer, converter dolly, heavy hauler trailer or pulpwood trailer, shall be equipped with a parking brake system as required by FMVSS No. 121 (S5.6) in effect at the time of manufacture. The parking brake shall be capable of holding the vehicle or combination of vehicles stationary under any condition of loading in which it is found on a public road (free of ice and snow). An agricultural commodity trailer, heavy hauler or pulpwood trailer shall carry sufficient chocking blocks to prevent movement when parked.

(c) Vehicles not subject to FMVSS Nos. 105 and 121 on the date of manufacture. (1) Each singly driven motor vehicle not subject to parking brake requirements of FMVSS Nos. 105 or 121 at the time of manufacturer, and every combination of motor vehicles must be equipped with a parking brake system adequate to hold the vehicle or combination on any grade on which it is operated, under any condition of

loading in which it is found on a public road (free of ice and snow).

(2) The parking brake system shall, at all times, be capable of being applied by either the driver's muscular effort or by spring action. If other energy is used to apply the parking brake, there must be an accumulation of that energy isolated from any common source and used exclusively for the operation of the parking brake.

Exception: This paragraph shall not be applicable to air-applied, mechanically-held parking brake systems which meet the parking brake requirements of FMVSS No. 121 (S5.6).

(3) The parking brake system shall be held in the applied position by energy other than fluid pressure, air pressure, or electric energy. The parking brake system shall not be capable of being released unless adequate energy is available to immediately reapply the parking brake with the required effectiveness.

■ 23. Section 393.42 is amended by revising the figure and revising paragraph (b) to read as follows:

§ 393.42 Brakes required on all wheels.

* * * * *

(b) *Exception.* (1) Trucks or truck tractors having three or more axles and manufactured before July 25, 1980, are not required to have brakes on the front wheels. However, these vehicles must meet the requirements of § 393.52.

(2) Motor vehicles being towed in a driveaway-towaway operation are not required to have operative brakes provided the combination of vehicles meets the requirements of § 393.52. This exception is not applicable to:

(i) Any motor vehicle towed by means of a tow-bar when another motor vehicle is full-mounted on the towed vehicle; and

(ii) Any combination of motor vehicles utilizing three or more saddle-mounts.

(3) Any semitrailer or pole trailer (laden or unladen) with a gross weight of 1,361 kg (3,000 pounds) or less which is subject to this part is not required to be equipped with brakes if the axle weight of the towed vehicle does not exceed 40 percent of the sum of the axle weights of the towing vehicle.

(4) Any full trailer or four-wheel pole trailer (laden or unladen) with a gross weight of 1,361 kg (3,000 pounds) or less which is subject to this part is not required to be equipped with brakes if the sum of the axle weights of the towed vehicle does not exceed 40 percent of the sum of the axle weights of the towing vehicle.

(5) Brakes are not required on the steering axle of a three-axle dolly which is steered by a co-driver.

(6) Loaded housemoving dollies, specialized trailers and dollies used to transport industrial furnaces, reactors, and similar motor vehicles are not required to be equipped with brakes, provided the speed at which the combination of vehicles will be operated does not exceed 32 km/hour (20 mph) and brakes on the combination of vehicles are capable of stopping the combination within 12.2 meters (40 feet) from the speed at which the vehicle is being operated or 32 km/hour (20 mph), whichever is less.

BILLING CODE 4910–EX–P

Figure 22 - Illustrations of Brake Requirements for Light-Duty Trailers in § 393.42

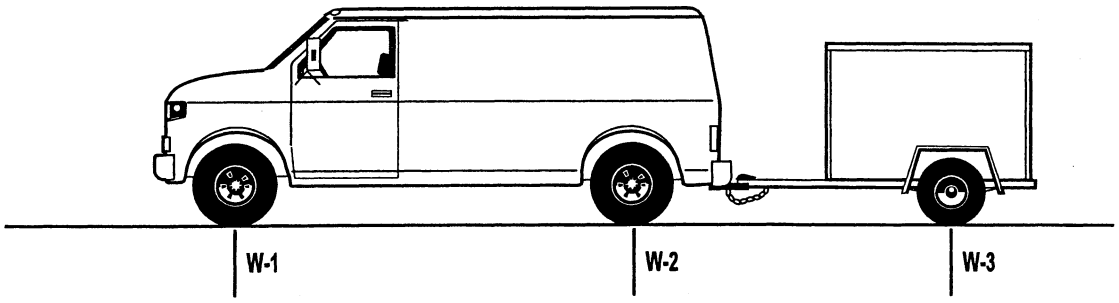

(Semitrailer or 2-wheel pole trailer of 1,360 kilograms (3,000 pounds) gross weight or less must be equipped with brakes if W-3 is greater than 40 percent of the sum of W-1 and W-2.)

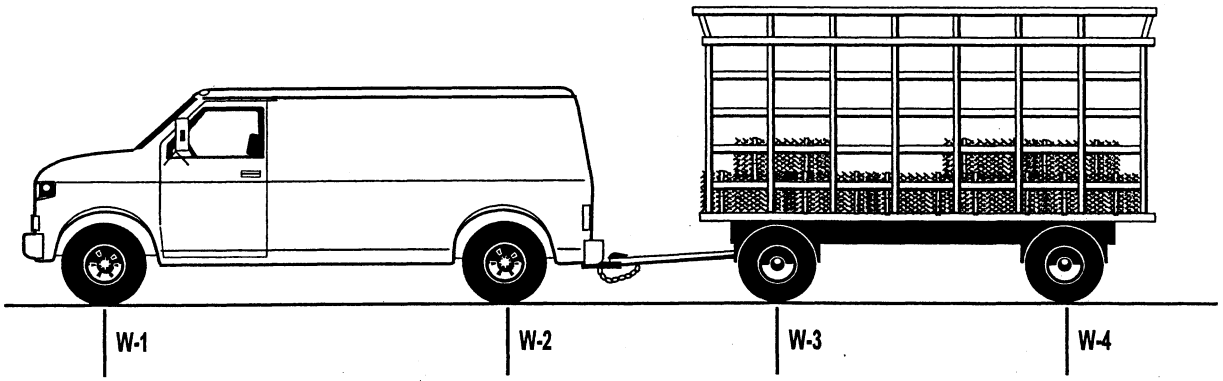

(Full trailer or 4-wheel pole trailer of 1,360 kilograms (3,000 pounds) gross weight or less must be equipped with brakes if the sum of W-3 and W-4 is greater than 40 percent of the sum of W-1 and W-2.)

BILLING CODE 4910–EX–C

■ 24. Section 393.43 is amended by revising paragraphs (a), (d) and (f) and by adding headings to paragraphs (b), (c), and (e) to read as follows:

§ 393.43 Breakaway and emergency braking.

(a) *Towing vehicle protection system.* Every motor vehicle, if used to tow a trailer equipped with brakes, shall be equipped with a means for providing that in the case of a breakaway of the trailer, the service brakes on the towing vehicle will be capable of stopping the towing vehicle. For air braked towing units, the tractor protection valve or similar device shall operate automatically when the air pressure on the towing vehicle is between 138 kPa and 310 kPa (20 psi and 45 psi).

(b) *Emergency brake requirements, air brakes.* * * *

(c) *Emergency brake requirements, vacuum brakes.* * * *

(d) *Breakaway braking requirements for trailers.* Every trailer required to be equipped with brakes shall have brakes which apply automatically and immediately upon breakaway from the towing vehicle. With the exception of trailers having three or more axles, all brakes with which the trailer is required to be equipped must be applied upon breakaway from the towing vehicle. The brakes must remain in the applied position for at least 15 minutes.

(e) *Emergency valves.* * * *

(f) *Exception.* The requirements of paragraphs (b), (c) and (d) of this section shall not be applicable to commercial motor vehicles being transported in driveaway-towaway operations.

■ 25. Section 393.45 is revised to read as follows:

§ 393.45 Brake tubing and hoses; hose assemblies and end fittings.

(a) *General construction requirements for tubing and hoses, assemblies, and end fittings.* All brake tubing and hoses, brake hose assemblies, and brake hose end fittings must meet the applicable requirements of FMVSS No. 106 (49 CFR 571.106).

(b) *Brake tubing and hose installation.* Brake tubing and hose must—

(1) Be long and flexible enough to accommodate without damage all normal motions of the parts to which it is attached;

(2) Be secured against chaffing, kinking, or other mechanical damage; and

(3) Be installed in a manner that prevents it from contacting the vehicle's exhaust system or any other source of high temperatures.

(c) *Nonmetallic brake tubing.* Coiled nonmetallic brake tubing may be used for connections between towed and towing motor vehicles or between the frame of a towed vehicle and the unsprung subframe of an adjustable axle of the motor vehicle if—

(1) The coiled tubing has a straight segment (pigtail) at each end that is at least 51 mm (2 inches) in length and is encased in a spring guard or similar device which prevents the tubing from kinking at the fitting at which it is attached to the vehicle; and

(2) The spring guard or similar device has at least 51 mm (2 inches) of closed coils or similar surface at its interface with the fitting and extends at least 38 mm (1½ inches) into the coiled segment of the tubing from its straight segment.

(d) *Brake tubing and hose connections.* All connections for air, vacuum, or hydraulic braking systems shall be installed so as to ensure an attachment free of leaks, constrictions or other conditions which would adversely affect the performance of the brake system.

§ 393.46 [Removed]

■ 26. Section 393.46 is removed and reserved.

■ 27. Section 393.47 is revised to read as follows:

§ 393.47 Brake actuators, slack adjusters, linings/pads and drums/rotors.

(a) *General requirements.* Brake components must be constructed, installed and maintained to prevent excessive fading and grabbing. The means of attachment and physical characteristics must provide for safe and reliable stopping of the commercial motor vehicle.

(b) *Brake chambers.* The service brake chambers and spring brake chambers on each end of an axle must be the same size.

(c) *Slack adjusters.* The effective length of the slack adjuster on each end of an axle must be the same.

(d) *Linings and pads.* The thickness of the brake linings or pads shall meet the applicable requirements of this paragraph—

(1) *Steering axle brakes.* The brake lining/pad thickness on the steering axle of a truck, truck-tractor or bus shall not be less than 4.8 mm (3/16 inch) at the shoe center for a shoe with a continuous strip of lining; less than 6.4 mm (¼ inch) at the shoe center for a shoe with two pads; or worn to the wear indicator if the lining is so marked, for air drum brakes. The steering axle brake lining/pad thickness shall not be less than 3.2 mm (⅛ inch) for air disc brakes, or 1.6 mm (1/16 inch) or less for hydraulic disc, drum and electric brakes.

(2) *Non-steering axle brakes.* An air braked commercial motor vehicle shall not be operated with brake lining/pad thickness less than 6.4 mm (¼ inch) or to the wear indicator if the lining is so marked (measured at the shoe center for drum brakes); or less than 3.2 mm (⅛ inch) for disc brakes. Hydraulic or electric braked commercial motor vehicles shall not be operated with a lining/pad thickness less than 1.6 mm (1/16 inch) (measured at the shoe center) for disc or drum brakes.

(e) *Clamp and Roto-Chamber Brake Actuator Readjustment limits.* The pushrod travel for clamp and roto-chamber type actuators must be less than 80 percent of the rated strokes listed in SAE J1817—Long Stroke Air Brake Actuator Marking, July 2001 (See § 393.7 (b) for information on incorporation by reference and availability of this document), or 80 percent of the rated stroke marked on the brake chamber by the chamber manufacturer, or the readjustment limit marked on the brake chamber by the chamber manufacturer. The pushrod travel for Type 16 and 20 long stroke clamp type brake actuators must be less than 51 mm (2 inches) or 80 percent of the rated stroke marked on the brake chamber by the chamber manufacturer, or the readjustment limit marked on the brake chamber by the chamber manufacturer.

(f) *Wedge Brake Adjustment.* The movement of the scribe mark on the lining shall not exceed 1.6 mm (1/16 inch).

(g) *Drums and rotors.* The thickness of the drums or rotors shall not be less than the limits established by the brake drum or rotor manufacturer.

■ 28. Section 393.48 is revised to read as follows:

§ 393.48 Brakes to be operative.

(a) *General rule.* Except as provided in paragraphs (b) and (c) of this section, all brakes with which a commercial motor vehicle is equipped must be operable at all times.

(b) *Devices to reduce or remove front-wheel braking effort.* A commercial motor vehicle may be equipped with a device to reduce the front wheel braking effort (or in the case of a three-axle truck or truck tractor manufactured before March 1, 1975, a device to remove the front-wheel braking effort) if that device meets the applicable requirements of paragraphs (b)(1) and (2) of this section.

(1) *Manually operated devices.* Manually operated devices to reduce or remove front-wheel braking effort may only be used on buses, trucks, and truck tractors manufactured before March 1, 1975. Such devices must not be used unless the vehicle is being operated under adverse conditions such as wet, snowy, or icy roads.

(2) *Automatic devices.* Automatic devices must not reduce the front-wheel braking force by more than 50 percent of the braking force available when the automatic device is disconnected (regardless of whether or not an antilock system failure has occurred on any axle). The device must not be operable by the driver except upon application of the control that activates the braking system. The device must not be operable when the brake control application pressure exceeds 85 psig (for vehicles equipped with air brakes) or 85 percent of the maximum system pressure (for vehicles which are not equipped with air brakes).

(c) *Exception.* Paragraph (a) of this section does not apply to—

(1) A towed vehicle with disabling damage as defined in § 390.5;

(2) A vehicle which is towed in a driveaway-towaway operation and is included in the exemption to the requirement for brakes on all wheels, § 393.42(b);

(3) Unladen converter dollies with a gross weight of 1,361 kg (3,000 lbs) or less, and manufactured prior to March 1, 1998;

(4) The steering axle of a three-axle dolly which is steered by a co-driver;

(5) Loaded house moving dollies, specialized trailers and dollies used to transport industrial furnaces, reactors, and similar motor vehicles provided the speed at which the combination of vehicles will be operated does not exceed 32 km/hour (20 mph) and brakes on the combination of vehicles are capable of stopping the combination within 12.2 meters (40 feet) from the speed at which the vehicle is being operated or 32 km/hour (20 mph), whichever is less.

(6) Raised lift axles. Brakes on lift axles need not be capable of being operated while the lift axle is raised. However, brakes on lift axles must be capable of being applied whenever the lift axle is lowered and the tires contact the roadway.

■ 29. Section 393.50 is revised to read as follows:

§ 393.50 Reservoirs required.

(a) *Reservoir capacity for air-braked power units manufactured on or after March 1, 1975, and air-braked trailers manufactured on or after January 1, 1975.* Buses, trucks, and truck-tractors manufactured on or after March 1, 1975, and air-braked trailers manufactured on or after January 1, 1975, must meet the reservoir requirements of FMVSS No. 121, S5.1.2, in effect on the date of manufacture.

(b) *Reservoir capacity for air-braked vehicles not subject to FMVSS No. 121 on the date of manufacture and all vacuum braked vehicles.* Each motor vehicle using air or vacuum braking must have either reserve capacity, or a reservoir, that would enable the driver to make a full service brake application with the engine stopped without depleting the air pressure or vacuum below 70 percent of that indicated by the air or vacuum gauge immediately before the brake application is made. For the purposes of this paragraph, a full service brake application means depressing the brake pedal or treadle valve to the limit of its travel.

(c) *Safeguarding of air and vacuum.* Each service reservoir system on a motor vehicle shall be protected against a loss of air pressure or vacuum due to a failure or leakage in the system between the service reservoir and the source of air pressure or vacuum, by check valves or equivalent devices whose proper functioning can be checked without disconnecting any air or vacuum line, or fitting.

(d) *Drain valves for air braked vehicles.* Each reservoir must have a condensate drain valve that can be manually operated. Automatic condensate drain valves may be used provided (1) they may be operated manually, or (2) a manual means of draining the reservoirs is retained.

■ 30. Section 393.51 is revised to read as follows:

§ 393.51 Warning signals, air pressure and vacuum gauges.

(a) *General Rule.* Every bus, truck and truck tractor, except as provided in paragraph (f), must be equipped with a signal that provides a warning to the driver when a failure occurs in the vehicle's service brake system. The warning signal must meet the applicable requirements of paragraphs (b), (c), (d) or (e) of this section.

(b) *Hydraulic brakes.* Vehicles manufactured on or after September 1, 1975, must meet the brake system indicator lamp requirements of FMVSS No. 571.105 (S5.3) applicable to the vehicle on the date of manufacture. Vehicles manufactured on or after July 1, 1973 but before September 1, 1975, or to which FMVSS No. 571.105 was not applicable on the date of manufacture, must have a warning signal which operates before or upon application of the brakes in the event of a hydraulic-type complete failure of a partial system. The signal must be either visible within the driver's forward field of view or audible. The signal must be continuous. (NOTE: FMVSS No. 105 was applicable to trucks and buses from September 1, 1975 to October 12, 1976, and from September 1, 1983, to the present. FMVSS No. 105 was not applicable to trucks and buses manufactured between October 12, 1976, and September 1, 1983. Motor carriers have the option of equipping those vehicles to meet either the indicator lamp requirements of FMVSS No. 105, or the indicator lamp requirements specified in this paragraph for vehicles which were not subject to FMVSS No. 105 on the date of manufacture.)

(c) *Air brakes.* A commercial motor vehicle (regardless of the date of manufacture) equipped with service brakes activated by compressed air (air brakes) or a commercial motor vehicle towing a vehicle with service brakes activated by compressed air (air brakes) must be equipped with a pressure gauge and a warning signal. Trucks, truck tractors, and buses manufactured on or after March 1, 1975, must, at a minimum, have a pressure gauge and a warning signal which meets the requirements of FMVSS No. 121 (S5.1.4 for the pressure gauge and S5.1.5 for the warning signal) applicable to the vehicle on the date of manufacture of the vehicle. Power units to which FMVSS No. 571.121 was not applicable on the date of manufacture of the vehicle must be equipped with—

(1) A pressure gauge, visible to a person seated in the normal driving position, which indicates the air pressure (in kilopascals (kPa) or pounds per square inch (psi)) available for braking; and

(2) A warning signal that is audible or visible to a person in the normal driving position and provides a continuous warning to the driver whenever the air pressure in the service reservoir system is at 379 kPa (55 psi) and below, or one-half of the compressor governor cutout pressure, whichever is less.

(d) *Vacuum brakes.* A commercial motor vehicle (regardless of the date it was manufactured) having service brakes activated by vacuum or a vehicle towing a vehicle having service brakes activated by vacuum must be equipped with—

(1) A vacuum gauge, visible to a person seated in the normal driving position, which indicates the vacuum (in millimeters or inches of mercury) available for braking; and

(2) A warning signal that is audible or visible to a person in the normal driving position and provides a continuous warning to the driver whenever the vacuum in the vehicle's supply reservoir is less than 203 mm (8 inches) of mercury.

(e) *Hydraulic brakes applied or assisted by air or vacuum.* Each vehicle equipped with hydraulically activated service brakes which are applied or assisted by compressed air or vacuum, and to which FMVSS No. 105 was not applicable on the date of manufacture, must be equipped with a warning signal that conforms to paragraph (b) of this section for the hydraulic portion of the system; paragraph (c) of this section for the air assist/air applied portion; or paragraph (d) of this section for the vacuum assist/vacuum applied portion. This paragraph shall not be construed as requiring air pressure gauges or vacuum gauges, only warning signals.

(f) *Exceptions.* The rules in paragraphs (c), (d) and (e) of this section do not apply to property carrying commercial motor vehicles which have less than three axles and (1) were manufactured before July 1, 1973, and (2) have a manufacturer's gross vehicle weight rating less than 4,536 kg (10,001 pounds).

■ 31. Section 393.61 is revised to read as follows:

§ 393.61 Truck and truck tractor window construction.

Each truck and truck tractor (except trucks engaged in armored car service) shall have at least one window on each side of the driver's compartment. Each window must have a minimum area of 1,290 cm^2 (200 in^2) formed by a rectangle 33 cm by 45 cm (13 inches by 17¾ inches). The maximum radius of the corner arcs shall not exceed 152 mm (6 inches). The long axis of the rectangle shall not make an angle of more than 45 degrees with the surface on which the unladen vehicle stands. If the cab is designed with a folding door or doors or with clear openings where doors or windows are customarily located, no windows shall be required in those locations.

■ 32. Section 393.62 is revised to read as follows:

§ 393.62 Emergency exits for buses.

(a) *Buses manufactured on or after September 1, 1994.* Each bus with a

GVWR of 4,536 kg (10,000 pounds) or less must meet the emergency exit requirements of FMVSS No. 217 (S5.2.2.3) in effect on the date of manufacture. Each bus with a GVWR of more than 4,536 kg (10,000 pounds) must have emergency exits which meet the applicable emergency exit requirements of FMVSS No. 217 (S5.2.2 or S5.2.3) in effect on the date of manufacture.

(b) Buses manufactured on or after September 1, 1973, but before September 1, 1994. (1) Each bus (including a school bus used in interstate commerce for non-school bus operations) with a GVWR of more than 4,536 kg (10,000 lbs) must meet the requirements of FMVSS No. 217, S5.2.2 in effect on the date of manufacture.

(2) Each bus (including a school bus used in interstate commerce for non-school bus operations) with a GVWR of 4,536 kg (10,000 lbs) or less must meet the requirements of FMVSS No. 217, S5.2.2.3 in effect on the date of manufacture.

(c) *Buses manufactured before September 1, 1973.* For each seated passenger space provided, inclusive of the driver there shall be at least 432 cm^2 (67 square inches) of glazing if such glazing is not contained in a push-out window; or, at least 432 cm^2 (67 square inches) of free opening resulting from opening of a push-out type window. No area shall be included in this minimum prescribed area unless it will provide an unobstructed opening of at least 1,290 cm^2 (200 in^2) formed by a rectangle 33 cm by 45 cm (13 inches by 17¾ inches). The maximum radius of the corner arcs shall not exceed 152 mm (6 inches). The long axis of the rectangle shall not make an angle of more than 45 degrees with the surface on which the unladen vehicle stands. The area shall be measured either by removal of the glazing if not of the push-out type, or of the movable sash if of the push-out type. The exit must comply with paragraph (d) of this section. Each side of the bus must have at least 40 percent of emergency exit space required by this paragraph.

(d) *Laminated safety glass/push-out window requirements for buses manufactured before September 1, 1973.* Emergency exit space used to satisfy the requirements of paragraph (c) of this section must have laminated safety glass or push-out windows designed and maintained to yield outward to provide a free opening.

(1) *Safety glass.* Laminated safety glass must meet Test No. 25, Egress, of American National Standard for Safety Glazing Materials for Glazing Motor Vehicles and Motor Vehicle Equipment Operating on Land Highways—Safety Standards ANSI/SAE Z26.1/96, August 1997. (See § 393.7 (b) for information on incorporation by reference and availability of this document.)

(2) *Push-out windows.* Each push-out window shall be releasable by operating no more than two mechanisms and allow manual release of the exit by a single occupant. For mechanisms which require rotary or straight (parallel to the undisturbed exit surface) motions to operate the exit, no more than 89 Newtons (20 pounds) of force shall be required to release the exit. For exits which require a straight motion perpendicular to the undisturbed exit surface, no more than 267 Newtons (60 pounds) shall be required to release the exit.

(e) *Emergency exit identification.* Each bus and each school bus used in interstate commerce for non-school bus operations, manufactured on or after September 1, 1973, shall meet the applicable emergency exit identification or marking requirements of FMVSS No. 217, S5.5, in effect on the date of manufacture. The emergency exits and doors on all buses (including school buses used in interstate commerce for non-school bus operations) must be marked ''Emergency Exit'' or ''Emergency Door'' followed by concise operating instructions describing each motion necessary to unlatch or open the exit located within 152 mm (6 inches) of the release mechanism.

(f) *Exception for the transportation of prisoners.* The requirements of this section do not apply to buses used exclusively for the transportation of prisoners.

§ 393.63 [Removed]

■ 33. Section 393.63 is removed and reserved.

■ 34. Section 393.67 is amended by removing the footnote to paragraphs (d) and (e); by revising the introductory text of paragraphs (a), (d), and (e); and by revising paragraph (f)(2) to read as follows:

§ 393.67 Liquid fuel tanks.

(a) *Application of the rules in this section.* The rules in this section apply to tanks containing or supplying fuel for the operation of commercial motor vehicles or for the operation of auxiliary equipment installed on, or used in connection with commercial motor vehicles.

* * * * *

(d) *Liquid fuel tank tests.* Each liquid fuel tank must be capable of passing the tests specified in paragraphs (d)(1) and (2) of this section. The specified tests are a measure of performance only. Alternative procedures which assure that equipment meets the required performance standards may be used.

* * * * *

(e) *Side-mounted liquid fuel tank tests.* Each side-mounted liquid fuel tank must be capable of passing the tests specified in paragraphs (e)(1) and (2) of this section and the test specified in paragraphs (d)(1) and (2) of this section. The specified tests are a measure of performance only. Alternative procedures which assure that equipment meets the required performance criteria may be used.

* * * * *

(f) * * *

(2) The manufacturer's name on tanks manufactured on and after July 1, 1989, and means of identifying the facility at which the tank was manufactured, and

* * * * *

■ 35. Section 393.68 is added to part 393 and reads as follows:

§ 393.68 Compressed natural gas fuel containers.

(a) *Applicability.* The rules in this section apply to compressed natural gas (CNG) fuel containers used for supplying fuel for the operation of commercial motor vehicles or for the operation of auxiliary equipment installed on, or used in connection with commercial motor vehicles.

(b) *CNG containers manufactured on or after March 26, 1995.* Any motor vehicle manufactured on or after March 26, 1995, and equipped with a CNG fuel tank must meet the CNG container requirements of FMVSS No. 304 (49 CFR 571.304) in effect at the time of manufacture of the vehicle.

(c) *Labeling.* Each CNG fuel container shall be permanently labeled in accordance with the requirements of FMVSS No. 304, S7.4.

■ 36. Section 393.70 is amended by revising paragraph (d)(8) to read as follows:

§ 393.70 Coupling devices and towing methods, except for driveaway-towaway operation.

(d) * * *

(8)(i) When two safety devices, including two safety chains or cables, are used and are attached to the towing vehicle at separate points, the points of attachment on the towing vehicle shall be located equally distant from, and on opposite sides of, the longitudinal centerline of the towing vehicle.

(ii) Where two chains or cables are attached to the same point on the towing vehicle, and where a bridle or a single chain or cable is used, the point

of attachment must be on the longitudinal centerline or within 152 mm (6 inches) to the right of the longitudinal centerline of the towing vehicle.

(iii) A single safety device, other than a chain or cable, must also be attached to the towing vehicle at a point on the longitudinal centerline or within 152 mm (6 inches) to the right of the longitudinal centerline of the towing vehicle.

■ 37. Section 393.71 is amended by revising paragraphs (a)(2) and (g) and by adding paragraph (b)(3):

§ 393.71 Coupling devices and towing methods, driveaway-towaway operations.

(a) * * *

(2) No more than one tow-bar or ball-and-socket type coupling device may be used in any combination.

* * * * *

(b) *Carrying vehicles on towing vehicles, and multiple saddle-mounts.*

* * * * *

(3) Saddle-mounted vehicles must be arranged such that the gross weight of the vehicles is properly distributed to prevent undue interference with the steering, braking, or maneuvering of the combination of vehicles.

* * * * *

(g) *Means required for towing.* No motor vehicles or combination of motor vehicles shall be towed in driveaway-towaway operations by means other than a tow-bar, ball-and-socket type coupling device, saddle-mount connections which meet the requirements of this section, or in the case of a semi-trailer equipped with an upper coupler assembly, a fifth-wheel meeting the requirements of § 393.70.

* * * * *

■ 38. Section 393.75 is amended by revising paragraph (e) to read as follows:

§ 393.75 Tires.

* * * * *

(e) A regrooved tire with a load-carrying capacity equal to or greater than 2,232 kg (4,920 pounds) shall not be used on the front wheels of any truck or truck tractor.

* * * * *

■ 39. Section 393.78 is revised to read as follows:

§ 393.78 Windshield wiping and washing systems.

(a) *Vehicles manufactured on or after December 25, 1968.* Each bus, truck, and truck-tractor manufactured on or after December 25, 1968, must have a windshield wiping system that meets the requirements of FMVSS No. 104 (S4.1) in effect on the date of manufacture. Each of these vehicles must have a windshield washing system that meets the requirements of FMVSS No. 104 (S4.2.2) in effect on the date of manufacture.

(b) *Vehicles manufactured between June 30, 1953, and December 24, 1968.* Each truck, truck-tractor, and bus manufactured between June 30, 1953, and December 24, 1968, shall be equipped with a power-driven windshield wiping system with at least two wiper blades, one on each side of the centerline of the windshield. Motor vehicles which depend upon vacuum to operate the windshield wipers, shall have the wiper system constructed and maintained such that the performance of the wipers will not be adversely affected by a change in the intake manifold pressure.

(c) *Driveaway-towaway operations.* Windshield wiping and washing systems need not be in working condition while a commercial motor vehicle is being towed in a driveaway-towaway operation.

■ 40. Section 393.79 is revised to read as follows:

§ 393.79 Windshield defrosting and defogging systems.

(a) *Vehicles manufactured on or after December 25, 1968.* Each bus, truck, and truck-tractor manufactured on or after December 25, 1968, must have a windshield defrosting and defogging system that meets the requirements of FMVSS No. 103 in effect on the date of manufacture.

(b) *Vehicles manufactured before December 25, 1968.* Each bus, truck, and truck-tractor shall be equipped with a means for preventing the accumulation of ice, snow, frost, or condensation that could obstruct the driver's view through the windshield while the vehicle is being driven.

■ 41. Section 393.82 is revised to read as follows:

§ 393.82 Speedometer.

Each bus, truck, and truck-tractor must be equipped with a speedometer indicating vehicle speed in miles per hour and/or kilometers per hour. The speedometer must be accurate to within plus or minus 8 km/hr (5 mph) at a speed of 80 km/hr (50 mph).

■ 42. Section 393.87 is revised to read as follows:

§ 393.87 Warning flags on projecting loads.

(a) Any commercial motor vehicle transporting a load which extends beyond the sides by more than 102 mm (4 inches) or more than 1,219 mm (4 feet) beyond the rear must have the extremities of the load marked with red or orange fluorescent warning flags. Each warning flag must be at least 457 mm (18 inches) square.

(b) *Position of flags.* There must be a single flag at the extreme rear if the projecting load is two feet wide or less. Two warning flags are required if the projecting load is wider than two feet. Flags must be located to indicate maximum width of loads which extend beyond the sides and/or rear of the vehicle.

§ 393.92 [Removed]

■ 43. Section 393.92 is removed and reserved.

■ 44. Section 393.94 is amended revising the section heading, by removing paragraph (d) and the footnote to paragraph (c), and by revising paragraphs (a) and (c)(4) to read as follows:

§ 393.94 Interior noise levels in power units.

(a) *Applicability of this section.* The interior noise level requirements apply to all trucks, truck-tractors, and buses.

* * * * *

(c)(4) The sound level meters used to determine compliance with the requirements of this section must meet the American National Standards Institute *''Specification for Sound Level Meters,''* ANSI S1.4—1983. (See § 393.7(b) for information on the incorporation by reference and availability of this document.)

* * * * *

■ 45. Section 393.95 is amended by revising the introductory text; by removing and reserving paragraphs (c), (h) and (i); and by revising paragraphs (a), (b) and (f) to read as follows:

§ 393.95 Emergency equipment on all power units.

Each truck, truck tractor, and bus (except those towed in driveaway-towaway operations) must be equipped as follows:

(a) *Fire Extinguishers.*

(1) *Minimum ratings:* (i) A power unit that is used to transport hazardous materials in a quantity that requires placarding (See § 177.823 of this title) must be equipped with a fire extinguisher having an Underwriters' Laboratories rating of 10 B:C or more.

(ii) A power unit that is not used to transport hazardous materials must be equipped with either:

(A) A fire extinguisher having an Underwriters' Laboratories rating of 5 B:C or more; or

(B) Two fire extinguishers, each of which has an Underwriters' Laboratories rating of 4 B:C or more.

(2) *Labeling and marking.* Each fire extinguisher required by this section must be labeled or marked by the manufacturer with its Underwriters' Laboratories rating.

(3) *Visual Indicators.* The fire extinguisher must be designed, constructed, and maintained to permit visual determination of whether it is fully charged.

(4) *Condition, location, and mounting.* The fire extinguisher(s) must be filled and located so that it is readily accessible for use. The extinguisher(s) must be securely mounted to prevent sliding, rolling, or vertical movement relative to the motor vehicle.

(5) *Extinguishing agents.* The fire extinguisher must use an extinguishing agent that does not need protection from freezing. Extinguishing agents must comply with the toxicity provisions of the Environmental Protection Agency's Significant New Alternatives Policy (SNAP) regulations under 40 CFR Part 82, Subpart G.

(b) *Spare fuses.* Power units for which fuses are needed to operate any required parts and accessories must have at least one spare fuse for each type/size of fuse needed for those parts and accessories.

* * * * *

(f) *Warning devices for stopped vehicles.* Except as provided in paragraph (g) of this section, one of the following options must be used:

(1) Three bidirectional emergency reflective triangles that conform to the requirements of Federal Motor Vehicle Safety Standard No. 125, § 571.125 of this title; or

(2) At least 6 fusees or 3 liquid-burning flares. The vehicle must have as many additional fusees or liquid-burning flares as are necessary to satisfy the requirements of § 392.22.

(3) Other warning devices may be used in addition to, but not in lieu of, the required warning devices, provided those warning devices do not decrease the effectiveness of the required warning devices.

* * * * *

■ 46. Section 393.201 is amended by removing paragraph (f) and by revising paragraphs (a) and (d) to read as follows:

§ 393.201 Frames.

(a) The frame or chassis of each commercial motor vehicle shall not be cracked, loose, sagging or broken.

* * * * *

(d) Parts and accessories shall not be welded to the frame or chassis of a commercial motor vehicle except in accordance with the vehicle manufacturer's recommendations. Any welded repair of the frame must also be in accordance with the vehicle manufacturer's recommendations.

* * * * *

■ 47. Section 393.207 is amended by adding paragraph (g) to read as follows:

§ 393.207 Suspension systems.

* * * * *

(g) *Air suspension exhaust controls.* The air suspension exhaust controls must not have the capability to exhaust air from the suspension system of one axle of a two-axle air suspension trailer unless the controls are either located on the trailer, or the power unit and trailer combination are not capable of traveling at a speed greater than 10 miles per hour while the air is exhausted from the suspension system. This paragraph shall not be construed to prohibit—

(1) Devices that could exhaust air from both axle systems simultaneously; or

(2) Lift axles on multi-axle units.

■ 48. Section 393.209 is amended by revising paragraph (b) and the first sentence of paragraph (d) to read as follows:

§ 393.209 Steering wheel systems.

* * * * *

(b) *Steering wheel lash.* (1) The steering wheel lash shall not exceed the following parameters:

Steering wheel diameter	Manual steering system	Power steering system
406 mm or less (16 inches or less)	51 mm (2 inches)	108 mm (4¼ inches).
457 mm (18 inches)	57 mm (2¼ inches)	121 mm (4¾ inches).
483 mm (19 inches)	60 mm (2⅜ inches)	127 mm (5 inches).
508 mm (20 inches)	64 mm (2½ inches)	133 mm (5¼ inches).
533 mm (21 inches)	67 mm (2⅝ inches)	140 mm (5½ inches).
559 mm (22 inches)	70 mm (2¾ inches)	146 mm (5¾ inches).

(2) For steering wheel diameters not listed in paragraph (b)(1) of this section the steering wheel lash shall not exceed 14 degrees angular rotation for manual steering systems, and 30 degrees angular rotation for power steering systems.

* * * * *

(d) *Steering system.* Universal joints and ball-and-socket joints shall not be worn, faulty or repaired by welding.

* * *

* * * * *

[FR Doc. 05–14259 Filed 8–12–05; 8:45 am]

BILLING CODE 4910–EX–P