AUTHENTICATED U.S. GOVERNMENT INFORMATION GPO

Federal Register

7–13–05 Wednesday
Vol. 70 No. 133 July 13, 2005

Pages 40185–40634

The **FEDERAL REGISTER** (ISSN 0097–6326) is published daily, Monday through Friday, except official holidays, by the Office of the Federal Register, National Archives and Records Administration, Washington, DC 20408, under the Federal Register Act (44 U.S.C. Ch. 15) and the regulations of the Administrative Committee of the Federal Register (1 CFR Ch. I). The Superintendent of Documents, U.S. Government Printing Office, Washington, DC 20402 is the exclusive distributor of the official edition. Periodicals postage is paid at Washington, DC.

The **FEDERAL REGISTER** provides a uniform system for making available to the public regulations and legal notices issued by Federal agencies. These include Presidential proclamations and Executive Orders, Federal agency documents having general applicability and legal effect, documents required to be published by act of Congress, and other Federal agency documents of public interest.

Documents are on file for public inspection in the Office of the Federal Register the day before they are published, unless the issuing agency requests earlier filing. For a list of documents currently on file for public inspection, see *www.archives.gov.*

The seal of the National Archives and Records Administration authenticates the Federal Register as the official serial publication established under the Federal Register Act. Under 44 U.S.C. 1507, the contents of the **Federal Register** shall be judicially noticed.

The **Federal Register** is published in paper and on 24x microfiche. It is also available online at no charge as one of the databases on GPO Access, a service of the U.S. Government Printing Office.

The online edition of the **Federal Register** *www.gpoaccess.gov/nara,* available through GPO Access, is issued under the authority of the Administrative Committee of the Federal Register as the official legal equivalent of the paper and microfiche editions (44 U.S.C. 4101 and 1 CFR 5.10). It is updated by 6 a.m. each day the **Federal Register** is published and includes both text and graphics from Volume 59, Number 1 (January 2, 1994) forward.

For more information about GPO Access, contact the GPO Access User Support Team, call toll free 1-888-293-6498; DC area 202-512-1530; fax at 202-512-1262; or via e-mail at *gpoaccess@gpo.gov.* The Support Team is available between 7:00 a.m. and 9:00 p.m. Eastern Time, Monday–Friday, except official holidays.

The annual subscription price for the **Federal Register** paper edition is $749 plus postage, or $808, plus postage, for a combined **Federal Register, Federal Register** Index and List of CFR Sections Affected (LSA) subscription; the microfiche edition of the **Federal Register** including the **Federal Register** Index and LSA is $165, plus postage. Six month subscriptions are available for one-half the annual rate. The prevailing postal rates will be applied to orders according to the delivery method requested. The price of a single copy of the daily **Federal Register,** including postage, is based on the number of pages: $11 for an issue containing less than 200 pages; $22 for an issue containing 200 to 400 pages; and $33 for an issue containing more than 400 pages. Single issues of the microfiche edition may be purchased for $3 per copy, including postage. Remit check or money order, made payable to the Superintendent of Documents, or charge to your GPO Deposit Account, VISA, MasterCard, American Express, or Discover. Mail to: New Orders, Superintendent of Documents, P.O. Box 371954, Pittsburgh, PA 15250-7954; or call toll free 1-866-512-1800, DC area 202-512-1800; or go to the U.S. Government Online Bookstore site, see *bookstore.gpo.gov.*

There are no restrictions on the republication of material appearing in the **Federal Register.**

How To Cite This Publication: Use the volume number and the page number. Example: 70 FR 12345.

Postmaster: Send address changes to the Superintendent of Documents, Federal Register, U.S. Government Printing Office, Washington DC 20402, along with the entire mailing label from the last issue received.

SUBSCRIPTIONS AND COPIES

PUBLIC

Subscriptions:

Paper or fiche	**202–512–1800**
Assistance with public subscriptions	**202–512–1806**
General online information	**202–512–1530; 1–888–293–6498**

Single copies/back copies:

Paper or fiche	**202–512–1800**
Assistance with public single copies	**1–866–512–1800 (Toll-Free)**

FEDERAL AGENCIES

Subscriptions:

Paper or fiche	**202–741–6005**
Assistance with Federal agency subscriptions	**202–741–6005**

FEDERAL REGISTER WORKSHOP

THE FEDERAL REGISTER: WHAT IT IS AND HOW TO USE IT

FOR: Any person who uses the Federal Register and Code of Federal Regulations.

WHO: Sponsored by the Office of the Federal Register.

WHAT: Free public briefings (approximately 3 hours) to present:

1. The regulatory process, with a focus on the Federal Register system and the public's role in the development of regulations.

2. The relationship between the Federal Register and Code of Federal Regulations.

3. The important elements of typical Federal Register documents.

4. An introduction to the finding aids of the FR/CFR system.

WHY: To provide the public with access to information necessary to research Federal agency regulations which directly affect them. There will be no discussion of specific agency regulations.

WHEN: Tuesday, July 19, 2005—Session Closed
9:00 a.m.–Noon
Tuesday, August 16, 2005
9:00 a.m.–Noon

WHERE: Office of the Federal Register
Conference Room, Suite 700
800 North Capitol Street, NW.
Washington, DC 20002

RESERVATIONS: (202) 741–6008

Printed on recycled paper.

Contents

Federal Register

Vol. 70, No. 133

Wednesday, July 13, 2005

Agricultural Marketing Service
RULES
Pistachios grown in—
California, 40185–40187

Agriculture Department
See Agricultural Marketing Service
See Farm Service Agency
See Forest Service
See Natural Resources Conservation Service
See Rural Business-Cooperative Service
NOTICES
Agency information collection activities; proposals, submissions, and approvals, 40307

Antitrust Division
NOTICES
National cooperative research notifications:
Advanced Electric Systems & Aerodynamics for Efficiency Improvements in Heavy Duty Trucks, 40399
Arizona State University Flexible Display Center, 40399–40400
DVD Copy Control Association, 40399
Southwest Research Institute, 40400

Army Department
See Engineers Corps

Centers for Disease Control and Prevention
NOTICES
Grants and cooperative agreements; availability, etc.:
Unrealized Opportunities for Clinical Prevention Practices Program, 40365–40370

Children and Families Administration
NOTICES
Agency information collection activities; proposals, submissions, and approvals, 40370–40371
Grants and cooperative agreements; availability, etc.:
Public Assistance Reporting Information System State Partnership Grants; correction, 40371–40372

Coast Guard
NOTICES
Meetings:
Towing Safety Advisory Committee, 40396

Commerce Department
See International Trade Administration
See National Oceanic and Atmospheric Administration

Defense Department
See Engineers Corps
PROPOSED RULES
Federal Acquisition Regulation (FAR):
Fast payment procedures, 40279–40280
Freedom of Information Act; implementation, 40249–40251

Education Department
NOTICES
Agency information collection activities; proposals, submissions, and approvals, 40321–40323

Employment and Training Administration
NOTICES
Agency information collection activities; proposals, submissions, and approvals, 40400–40405

Energy Department
See Federal Energy Regulatory Commission

Engineers Corps
NOTICES
Environmental statements; notice of intent:
Orange and Los Angeles Counties, CA; Coyote Creek Watershed, 40320–40321

Environmental Protection Agency
RULES
Air pollution control; new motor vehicles and engines:
Highway and nonroad engines; test procedures and omnibus technical amendments, 40420–40612
Air quality implementation plans; approval and promulgation; various States:
Missouri, 40193–40195
Texas; correction, 40195–40196
Pesticides; tolerances in food, animal feeds, and raw agricultural commodities:
Imidacloprid, 40196–40199
Potassium triiodide, 40199–40202
Spirodiclofen, 40202–40212
PROPOSED RULES
Pesticide programs:
Pesticide registration review; procedural regulations, 40251–40276
NOTICES
Agency information collection activities; proposals, submissions, and approvals, 40327–40330
Air pollutants, hazardous; national emission standards:
Predictive emission monitoring systems; requests for initial certification; receipt, 40330–40331
Meetings:
Scientific Counselors Board, 40331–40333
Pesticide programs:
Risk assessments—
1,3-Dichloropropene, 40342–40345
Dazomet, 40339–40341
Metam sodium, 40333–40336
Methyl bromide, 40336–40339
Simazine, 40345–40348
Tolerance reassessment decisions—
Cyhexatin, 40341–40342
Pesticides; emergency exemptions, etc.:
Coumophos, etc., 40348–40351
Water supply:
Public water supply supervision program—
Pennsylvania, 40351–40352

Farm Service Agency
NOTICES
Grants and cooperative agreements; availability, etc.:
Alaska Dairy Fund, 40307–40309

Federal Accounting Standards Advisory Board
NOTICES
Meetings:
Accounting for fiduciary activities draft; hearing, 40352

Federal Aviation Administration
RULES
Airworthiness directives:
Hartzell Propeller Inc., 40187–40189
NOTICES
Meetings:
RTCA, Inc., 40415–40416
RTCA Program Management Committee, 40415

Federal Communications Commission
RULES
Common carrier services:
Cable television systems—
Satellite Home Viewer Extension and Reauthorization Act; Section 207 implementation, 40216–40225
Radio stations; table of assignments:
Alabama, 40212
Arizona, 40213–40214
Colorado, 40215–40216
Kentucky, 40213
Mississippi, 40212–40213
North Carolina, 40215
Oregon, 40213
Various States, 40214–40215
PROPOSED RULES
Common carrier services:
Wireless telecommunications services—
800 MHz cellular handsets, telephones, and other wireless devices use aboard airborne aircraft; facilitation, 40276–40277
Radio stations; table of assignments:
California, 40278
Louisiana, 40277–40278
Oklahoma, 40278–40279
NOTICES
Agency information collection activities; proposals, submissions, and approvals, 40354–40355, 40362
Common carrier services:
Telecommunications relay services—
Consumer complaint log summaries; due date reminder, 40355–40356
Debarment notices; schools and libraries universal service support mechanism:
Bokhari, Haider, 40356–40358
Bokhari, Qasim, 40358–40360
Morrett, Ronald R., Jr., 40360–40362
Weaver, John Henry, 40352–40354
Meetings; Sunshine Act, 40362–40363
Rulemaking proceedings; petitions filed, granted, denied, etc., 40363

Federal Energy Regulatory Commission
NOTICES
Hydroelectric applications, 40323–40324
Reports and guidance documents; availability, etc.:
American Jobs Creation Act; manufacturing activities; tax deduction; correction, 40327
Applications, hearings, determinations, etc.:
Access Energy Cooperative, 40323
Dominion Transmission, Inc., 40324
El Paso Natural Gas Co., 40324
Gulfstream Natural Gas System, L.L.C., 40324–40325
National Fuel Gas Supply Corp., 40325
Neptune Regional Transmission System, L.L.C., 40325–40326
Southern Natural Gas Co., 40326
Tennessee Gas Pipeline Co., 40326
Texas Eastern Transmission, LP, 40326–40327
West Valley Hydroelectric Project, 40327

Federal Maritime Commission
NOTICES
Agreements filed, etc., 40363–40364

Federal Reserve System
NOTICES
Banks and bank holding companies:
Change in bank control, 40364
Formations, acquisitions, and mergers, 40364–40365
Permissible nonbanking activities, 40365

Fish and Wildlife Service
NOTICES
Comprehensive conservation plans; availability, etc.:
Upper Ouachita National Wildlife Refuge, LA, 40396–40397

Food and Drug Administration
PROPOSED RULES
Human drugs:
Cold, cough, allergy, bronchodilator, and antiasthmatic products—
Bronchodilator products (OTC), 40237–40249
Combination drug products; tentative final monograph amendment, 40232–40237
NOTICES
Memorandums of understanding:
Environmental Protection Agency; environmental contaminants in fish and shellfish, 40373–40376
FDA Alumni Association, Inc., 40376–40379
Mammography Quality Standards Act—
Illinois Emergency Management Agency; State as Certifiers Program; authorization, 40380–40385

Forest Service
NOTICES
Meetings:
Resource Advisory Committees—
Madera County, 40309

General Services Administration
PROPOSED RULES
Federal Acquisition Regulation (FAR):
Fast payment procedures, 40279–40280

Health and Human Services Department
See Centers for Disease Control and Prevention
See Children and Families Administration
See Food and Drug Administration
See National Institutes of Health

Homeland Security Department
See Coast Guard
NOTICES
Meetings:
Individuals with Disabilities in Emergency Preparedness Interagency Coordinating Council, 40395–40396

Indian Affairs Bureau
NOTICES
Agency information collection activities; proposals, submissions, and approvals, 40397–40398

Interior Department
See Fish and Wildlife Service
See Indian Affairs Bureau
See Land Management Bureau

Internal Revenue Service
RULES
Income taxes:
Section 179 elections; property cost, 40189–40193

International Trade Administration
NOTICES
Antidumping:
Hot-rolled carbon steel flat products from—
Romania, 40318
Stainless steel wire rod from—
India, 40318–40320

Justice Department
See Antitrust Division

Labor Department
See Employment and Training Administration

Land Management Bureau
NOTICES
Closure of public lands:
Wyoming, 40398

National Aeronautics and Space Administration
PROPOSED RULES
Federal Acquisition Regulation (FAR):
Fast payment procedures, 40279–40280
NOTICES
Meetings:
Aeronautics Research Advisory Committee, 40406
Aerospace Medicine and Occupational Health Advisory Committee, 40406

National Highway Traffic Safety Administration
PROPOSED RULES
Anthropomorphic test devices:
Occupant crash protection—
Hybrid III 10-year-old child test dummy, 40281–40301
Motor vehicle safety standards:
Occupant crash protection—
Attaching child restraints to LATCH system for suppression test, 40280–40281
NOTICES
Reports and guidance documents; availability, etc.:
Passenger cars, light trucks, and vans; static stability factor trends; technical report, 40416–40417

National Institutes of Health
NOTICES
Meetings:
National Cancer Institute, 40386–40387
National Center on Minority Health and Health Disparities, 40387
National Eye Institute, 40387–40388
National Heart, Lung, and Blood Institute, 40388
National Institute of Child Health and Human Development, 40388–40389
National Institute of Diabetes and Digestive and Kidney Diseases, 40389–40390
National Institute of General Medical Sciences, 40389
National Institute on Deafness and Other Communication Disorders, 40390
National Library of Medicine, 40390–40392
Scientific Review Center, 40392–40395
Patent licenses; non-exclusive, exclusive, or partially exclusive:
Morphotek, Inc., 40385–40386

National Oceanic and Atmospheric Administration
RULES
Fishery conservation and management:
Alaska; fisheries of Exclusive Economic Zone—
Pacific Ocean perch, 40231
Magnuson-Stevens Act provisions—
Pacific Coast groundfish; fishing capacity reduction program, 40225–40231
PROPOSED RULES
Fishery conservation and management:
West Coast States and Western Pacific fisheries—
Hawaii pelagic longline fisheries; seabird incidental catch reduction measures, 40302–40305
Western Pacific bottomfish, 40305–40306
Marine mammals:
Commercial fishing authorizations; incidental taking—
Atlantic Large Whale Take Reduction Plan, 40301–40302

Natural Resources Conservation Service
NOTICES
Environmental statements; record of decision:
Big Cedar Creek Watershed, GA, 40309–40311
Caballo Arroyos Site 4 (Wardy-Hedgecock Dam), NM, 40311

Nuclear Regulatory Commission
NOTICES
Applications, hearings, determinations, etc.:
Entergy Operations, Inc., 40406–40407

Railroad Retirement Board
NOTICES
Meetings:
Actuarial Advisory Committee, 40407

Rural Business-Cooperative Service
NOTICES
Grants and cooperative agreements; availability, etc.:
1890 Land Grant Institutions Rural Entrepreneurial Program Outreach Initiative, 40311–40318

Securities and Exchange Commission
RULES
Securities:
Penny stock rules; amendments, 40614–40633
NOTICES
Agency information collection activities; proposals, submissions, and approvals, 40407–40409
Self-regulatory organizations; proposed rule changes:
American Stock Exchange LLC, 40409–40410
National Association of Securities Dealers, Inc., 40411–40412
Philadelphia Stock Exchange, Inc.; summary abrogation order, 40413

Small Business Administration
NOTICES
Disaster loan areas:
Maine, 40413
Interest rates; quarterly determinations, 40413
Meetings:
Small Business Development Centers Office National Advisory Board, 40414

State Department
NOTICES
Culturally significant objects imported for exhibition:
Cezanne in Provence, 40414
Meetings:
International Telecommunication Advisory Committee, 40414
Public Diplomacy, U.S. Advisory Commission, 40414–40415

Transportation Department
See Federal Aviation Administration
See National Highway Traffic Safety Administration
NOTICES
Aviation proceedings:
Agreements filed; weekly receipts, 40415

Treasury Department
See Internal Revenue Service
NOTICES
Agency information collection activities; proposals, submissions, and approvals, 40417–40418

Separate Parts In This Issue

Part II
Environmental Protection Agency, 40420–40612

Part III
Securities and Exchange Commission, 40614–40633

Reader Aids
Consult the Reader Aids section at the end of this issue for phone numbers, online resources, finding aids, reminders, and notice of recently enacted public laws.

To subscribe to the Federal Register Table of Contents LISTSERV electronic mailing list, go to http://listserv.access.gpo.gov and select Online mailing list archives, FEDREGTOC-L, Join or leave the list (or change settings); then follow the instructions.

CFR PARTS AFFECTED IN THIS ISSUE

A cumulative list of the parts affected this month can be found in the Reader Aids section at the end of this issue.

7 CFR
983 40185

14 CFR
39 40187

17 CFR
240 40614

21 CFR

Proposed Rules:
310 40232
341 (2 documents) 40232, 40237

26 CFR
1 40189
602 40189

32 CFR

Proposed Rules:
285 40249

40 CFR
52 (2 documents) 40193, 40195
85 40420
86 40420
89 40420
90 40420
91 40420
92 40420
94 40420
180 (3 documents) 40196, 40199, 40202
1039 40420
1048 40420
1051 40420
1065 40420
1068 40420

Proposed Rules:
155 40251

47 CFR
73 (8 documents) 40212, 40213, 40214, 40215
76 40216

Proposed Rules:
22 40276
73 (3 documents) 40277, 40278

48 CFR

Proposed Rules:
52 40279

49 CFR

Proposed Rules:
571 40280
572 40281

50 CFR
600 40225
679 40231

Proposed Rules:
229 40301
660 (2 documents) 40302, 40305

Rules and Regulations

Federal Register

Vol. 70, No. 133

Wednesday, July 13, 2005

This section of the FEDERAL REGISTER contains regulatory documents having general applicability and legal effect, most of which are keyed to and codified in the Code of Federal Regulations, which is published under 50 titles pursuant to 44 U.S.C. 1510.

The Code of Federal Regulations is sold by the Superintendent of Documents. Prices of new books are listed in the first FEDERAL REGISTER issue of each week.

DEPARTMENT OF AGRICULTURE

Agricultural Marketing Service

7 CFR Part 983

[Docket No. FV05–983–3 FR]

Pistachios Grown in the State of California; Termination of Language in Table 3 ''Maximum Defect and Minimum Size Levels''

AGENCY: Agricultural Marketing Service, USDA.

ACTION: Final rule.

SUMMARY: This rule terminates language in Table 3, ''Maximum Defect and Minimum Size Levels,'' of the marketing order regulating pistachios produced in the State of California. This language was erroneously included in Table 3 at the time of promulgation of the order. Removal of the language in the table was unanimously recommended by the Administrative Committee for Pistachios, the committee responsible for local administration of the order.

DATES: Effective July 14, 2005.

FOR FURTHER INFORMATION CONTACT: Melissa Schmaedick, Marketing Order Administration Branch, Fruit and Vegetable Programs, AMS, USDA, P.O. Box 1035, Moab, Utah 84532; telephone: (435) 259–7988, Fax: 259–4945; or Rose Aguayo, California Marketing Field Office, Marketing Order Administration Branch, Fruit and Vegetable Programs, AMS, USDA, 2202 Monterey Street, Suite 102B, Fresno, California 93721; telephone: (559) 487–5901, Fax: (559) 487-5906.

Small businesses may request information on complying with this regulation by contacting Jay Guerber, Marketing Order Administration Branch, Fruit and Vegetable Programs, AMS, USDA, 1400 Independence Avenue, SW., STOP 0237, Washington, DC 20250–0237; telephone: (202) 720/2491, Fax: (202) 720/8938, or e-mail: *Jay.Guerber@usda.gov*.

SUPPLEMENTARY INFORMATION: This rule is issued under the Agricultural Marketing Agreement Act of 1937, as amended (7 U.S.C. 601–674), hereinafter referred to as the ''Act.''

The Department of Agriculture (USDA) is issuing this rule in conformance with Executive Order 12866.

This rule has been reviewed under Executive Order 12988, Civil Justice Reform. This rule is not intended to have retroactive effect. This rule will not preempt any State or local laws, regulations or policies, unless they present an irreconcilable conflict with this rule.

The Act provides that administrative proceedings must be exhausted before parties may file suit in court. Under section 608c(15)(A) of the Act, any handler subject to an order may file with USDA a petition stating that the order, any provision of the order, or any obligation imposed in connection with the order is not in accordance with law and request a modification of the order or to be exempted therefrom. A handler is afforded the opportunity for a hearing on the petition. After the hearing USDA would rule on the petition. The Act provides that the district court of the United States in any district in which the handler is an inhabitant, or has his or her principal place of business, has jurisdiction to review USDA's ruling on the petition, provided an action is filed not later than 20 days after date of the entry of the ruling.

This rule terminates language in Table 3, ''Defect and Minimum Size Levels,'' of the marketing order regulating pistachios produced in the State of California (69 FR 17844, April 5, 2004). The termination applies to language in two portions of the table: (1) In the ''Internal (Kernel) Defects'' section, the words ''external or'' will be removed from the heading ''Total external or internal defects allowed'' because this section of the table only covers internal defects allowed, and (2) the sub-heading ''Minimum permissible defects (percent by weight)'' will be removed so that all information in the table will be captured under the table heading ''Maximum permissible defects (percent by weight).'' This language was erroneously included in Table 3 at the time of promulgation of the order. Termination of this language removes this language and allows Table 3 to read as originally intended by the proponents of the order.

Suspension of this language was unanimously recommended by the Administrative Committee for Pistachios (ACP), the group responsible for local administration of the order, at a December 15, 2004, committee meeting. However, because this is a permanent change, USDA is removing and terminating the language.

The federal marketing order regulating the handling of pistachios produced in the State of California was promulgated in 2004. Provisions to establish the ACP became effective on April 6, 2004 (69 FR 17844, April 5, 2004). The regulatory provisions of the order will become effective on August 1, 2005 (70 FR 661, January 5, 2005; 70 FR 4191, January 28, 2005).

Section 983.39, Minimum quality levels, of the order establishes maximum defect and minimum size tolerances for pistachios produced and handled in California. Table 3 of the order, which is included in § 983.39, describes the maximum thresholds for defects, as well as the maximum tolerance for minimum-sized pistachios, in table format. Table 3 also serves as a reference tool for handlers regulated by the order to easily interpret the written quality and size provisions of the order under § 983.39.

ACP preparations for implementing the regulatory provisions of the order brought to light that two sub-headings in Table 3, ''Maximum Defect and Minimum Size Levels,'' were erroneously included at the time of promulgation. As earlier mentioned, termination of this language will remove this language and allow Table 3 to read as originally intended by the proponents of the order.

This final rule removes the words ''external or'' from the heading ''Total external or internal defects allowed'' in the ''Internal (Kernel) Defects'' section because this section of the table only applies to internal defects, not external defects. Additionally, the sub-heading ''Minimum permissible defects (percent by weight)'' is removed from the table so that all information in the table will be captured under the table heading ''Maximum Permissible Defects (percent by weight).'' This language should be removed prior to the effective date of

the regulatory provisions of the order (August 1, 2005).

Final Regulatory Flexibility Analysis

Pursuant to the requirements set for in the Regulatory Flexibility Act (RFA) the administrator of the Agricultural Marketing Service (AMS) has considered the economic impact of this action on small entities.

The purpose of the RFA is to fit regulatory actions to the scale of business subject to such actions in order that small businesses will not be unduly or disproportionately burdened. Marketing orders issued pursuant to the Act, and rules issued thereunder, are unique in that they are brought about through group action of essentially small entities acting on their own behalf. Thus, both statutes have small entity orientation and compatibility.

There are approximately 20 handlers of California pistachios subject to regulation under the marketing order and approximately 741 producers in the production area. Small agricultural service firms are defined as those whose annual receipts are less than $6,000,000 and small agricultural producers have been defined by the Small Business Administration as those having annual receipts less than $750,000 (13 CFR 121.201). Eight of the 20 handlers subject to regulation have annual pistachio receipts of at least $6,000,000. In addition, 722 producers have annual receipts less than $750,000. Thus, the majority of pistachio producers and handlers regulated under the marketing order may be classified as small entities.

This action terminates language in Table 3, ''Maximum Defect and Minimum Size Levels'' in § 983.39 of the order. The termination applies to language in two portions of the table: (1) In the ''Internal (Kernel) Defects'' section, the words ''external or'' will be removed from the heading ''Total external or internal defects allowed'' because this section of the table only pertains to internal defects, and (2) the sub-heading ''Minimum permissible defects (percent by weight)'' is removed so that all information in the table will be captured under the table heading ''Maximum permissible defects (percent by weight).'' Neither the thresholds contained in the table nor the regulatory provisions outlined in § 983.39 of the order will be impacted by this termination. The termination will serve to facilitate a more accurate interpretation of the information presented in Table 3. Thus, no significant impact on large or small entities is anticipated as a result of this proposal.

One alternative to this action would be to not remove and terminate the identified language in Table 3. However, at the December 15, 2004, meeting of the ACP, it was determined that if this language were not removed from the table, handlers regulated under the order may not correctly interpret the thresholds outlined in Table 3. Thus, the ACP unanimously recommended that the table be corrected. Like all committee meetings, this meeting was a public meeting and all entities, both large and small, were able to express views on this issue. No comments or recommendations against the recommendation were voiced at the meeting.

In compliance with Office and Management and Budget (OMB) regulations (5 CFR part 1320) which implement the Paperwork Reduction Act of 1995 (44 U.S.C. 3501 *et seq.*), the information collection and recordkeeping requirements imposed by this order have been previously approved by OMB and assigned OMB No. 0581–0215. This rule imposes no additional reporting or recordkeeping requirements on either small or large pistachio handlers. As with all Federal marketing order programs, reports and forms are periodically reviewed to reduce information requirements and duplication by industry and public sector agencies.

USDA has not identified any relevant Federal rules that duplicate, overlap, or conflict with this rule.

A proposed rule concerning this action was published in the **Federal Register** on May 4, 2005 (70 FR 23065). Copies of the proposed rule were also mailed to all pistachio handlers. Finally, the proposal was made available through the Internet by the Office of the Federal Register and USDA. A 15-day comment period ending May 19, 2005, was provided for interested persons to respond to the proposal. No comments were received.

A small business guide on complying with fruit, vegetable, and specialty crop marketing agreements and orders may be viewed at the following website: *http://www.ams.usda.gov/fv/moab.html*. Any questions about the compliance guide should be sent to Jay Guerber at the previously mentioned address in the **FOR FURTHER INFORMATION CONTACT** section.

After consideration of all relevant material presented, including the ACP's recommendation, and other information, it is found that the provisions being removed and terminated by this final rule do not tend to effectuate the declared policy of the Act and that this action is appropriate. Accordingly, this action is appropriate under the order.

Pursuant to 5 U.S.C. 553, it is also found and determined that good cause exists for not postponing the effective date of this rule until 30 days after publication in the **Federal Register** because: (1) Termination of language in Table 3 should be made as soon as possible prior to the effective date of the regulatory provisions of the order, August 1, 2005; (2) this action has been discussed at open meetings of the ACP and is fully supported; and (3) comments on the removal and termination of this language were solicited and no comments were received.

List of Subjects in 7 CFR Part 983

Pistachios, Marketing agreements and orders, Reporting and recordkeeping requirements.

■ For the reasons set forth in the preamble, 7 CFR part 983 is amended as follows:

PART 983—PISTACHIOS GROWN IN CALIFORNIA

■ 1. The authority citation for 7 CFR part 983 continues to read as follows:

Authority: 7 U.S.C. 601–674.

■ 2. In § 983.39, Table 3 to paragraph (a) is revised to read as follows:

§ 983.39 Minimum quality levels.

(a) * * *

TABLE 3.—MAXIMUM DEFECT AND MINIMUM SIZE LEVELS

Factor	Maximum permissible defects (percent by weight)	
	Inshell	Kernels
External (Shell) Defects:		
1. Non-splits & not split on suture	10.0	.....

TABLE 3.—MAXIMUM DEFECT AND MINIMUM SIZE LEVELS—Continued

Factor	Maximum permissible defects (percent by weight)	
	Inshell	Kernels
(i) Maximum non-splits allowed	4.0	.....
2. Adhering hull material	2.0	.....
3. Dark stain	3.0	.....
4. Damage by other means, other than 1, 2 and 3 above, which materially detracts from the appearance or the edible or marketing quality of the individual shell or the lot.		
Internal (Kernel) Defects:		
1. Damage	6.0	3.0
Immature kernel (Fills <75%—>50% of the shell)		
Kernel spotting (Affects ⅛ aggregate surface)		
2. Serious damage	4.0	2.5
Minor insect or vertebrate injury/insect damage, insect evidence, mold, rancidity, decay.		
(i) Maximum inset damage allowed	2.0	0.5
Total internal defects allowed	9.0	.....
Other Defects:		
1. Shell pieces and blanks (Fills <50% of the shell)	2.0	.....
(i) Maximum blanks allowed	1.0	.....
2. Foreign material	0.25	0.1
No glass, metal or live insects permitted		
3. Particles and dust	0.25	.....
4. Loose kernels	6.0	.....
Maximum allowable inshell pistachios that will pass through a 30/64ths inch round hold screen	5.0	.....

* * * * *

Dated: July 8, 2005.

Kenneth C. Clayton,

Acting Administrator, Agricultural Marketing Service.

[FR Doc. 05–13756 Filed 7–12–05; 8:45 am]

BILLING CODE 3410–02–M

DEPARTMENT OF TRANSPORTATION

Federal Aviation Administration

14 CFR Part 39

[Docket No. 2003–NE–53–AD; Amendment 39–14188; AD 2005–14–11]

RIN 2120–AA64

Airworthiness Directives; Hartzell Propeller, Inc., McCauley Propeller Systems, and Sensenich Propeller Manufacturing Company, Inc. Propellers

AGENCY: Federal Aviation Administration (FAA), DOT.

ACTION: Final rule.

SUMMARY: The FAA is adopting a new airworthiness directive (AD) for Hartzell Propeller, Inc., McCauley Propeller Systems, and Sensenich Propeller Manufacturing Company, Inc. propellers. This AD requires maintenance actions amounting to an overhaul of the affected propellers. This AD results from the investigation of a failed propeller blade and subsequent inspections of various propeller models returned to service by Southern California Propeller Service, of Inglewood, CA. We are issuing this AD to prevent blade failure that could result in separation of a propeller blade and loss of control of the airplane.

DATES: This AD becomes effective August 17, 2005.

ADDRESSES: You may examine the AD docket at the FAA, New England Region, Office of the Regional Counsel, 12 New England Executive Park, Burlington, MA.

FOR FURTHER INFORMATION CONTACT: Timothy Smyth, Aerospace Engineer, Chicago Aircraft Certification Office, FAA, Small Airplane Directorate, 2300 East Devon Avenue, Des Plaines, IL 60018–4696; telephone (847) 294–7132, fax (847) 294–7834 for Hartzell Propellers.

Contact Jeff Janusz, Aerospace Engineer, Wichita Aircraft Certification Office, FAA, Small Airplane Directorate, 1801 Airport Road, Room 100, Wichita, Kansas 67209; telephone (316) 946–4148; fax (316) 946–4107 for McCauley Propellers.

Contact James Delisio, Aerospace Engineer, New York Aircraft Certification Office, FAA, Engine and Propeller Directorate, 1600 Stewart Avenue, Suite 410, Westbury, NY 11590; telephone (516) 228–7321, fax (516) 794–5531 for Sensenich Propellers.

SUPPLEMENTARY INFORMATION: The FAA proposed to amend 14 CFR part 39 with a proposed airworthiness directive (AD). The proposed AD applies to certain Hartzell Propeller, Inc., McCauley Propeller Systems, and Sensenich Propeller Manufacturing Company, Inc. propellers returned to service by Southern California Propeller Service. We published the proposed AD in the **Federal Register** on May 20, 2004 (69 FR 29111). That action proposed to require maintenance actions that amount to an overhaul of Hartzell Propeller, Inc., McCauley Propeller Systems, and Sensenich Propeller Manufacturing Company, Inc. propellers returned to service by Southern California Propeller Service.

Examining the AD Docket

You may examine the AD Docket (including any comments and service information), by appointment, between 8 a.m. and 4:30 p.m., Monday through Friday, except Federal holidays. See **ADDRESSES** for the location.

Comments

We provided the public the opportunity to participate in the development of this AD. We have considered the comments received.

Question of Why the FAA Is Changing the Rules

One commenter asks ''Why change the rules just because one repair station, Southern California Propeller Service, of Inglewood, CA didn't follow the existing rules?'' The commenter feels that the existing rules have worked for well over 50 years, and asks how

making general aviation cost more is going to solve the problem. The commenter feels that the proposed AD is counterproductive because it will force people to go to ''cut-rate'' outfits like Southern California Propeller Service. We don't agree that we are ''changing the rules.'' We are issuing an AD to correct unsafe conditions introduced by Southern California Propeller Services. The Code of Federal Regulations, 14 CFR part 39 allows us to issue ADs to correct unsafe conditions. While the public will incur costs to comply with this action, the action will address the unsafe conditions found in other propellers.

Request To Add Hartzell HC and HA Series Propellers to the Applicability

One commenter asks if we should add Hartzell HC series and HA series propellers to the Applicability of this AD. We don't agree that we need to add the Hartzell ''HC'' or ''HA'' series propellers at this time. We reviewed the repair station certificate and responses from the public, and found no evidence that Southern California Propeller Service worked on Hartzell five-bladed steel hub propellers. While we were developing Special Airworthiness Information Bulletin (SAIB) No. NE–01–09, we were advised to include a reference to Sensenich propellers (even though the repair station certificate doesn't denote them). However, if someone sends us information that documents work done by Southern California Propeller Service on propellers beyond those denoted in the AD, we will review the AD for an expanded applicability. We have not changed the propeller model numbering to maintain consistency with the NPRM and SAIB No. NE–01–09.

Request To Change the Wording in Paragraph ''2(e)'' of the AD

The same commenter asks us to change the wording in paragraph ''2(e)'' of the AD to read, ''For Hartzell and McCauley propellers listed in Table 1 of this AD, any letter, number, or any combination of letters or numbers (or lack of a letter or number) could appear where open parentheses are shown in the model number. Model numbers could show any combination of letters or numbers where the model number contains an open parentheses with a series of numbers or letters.'' We do not agree. The suggested change adds nothing, so we choose to not alter the wording.

Request To Change the Wording in Paragraphs ''2(f)'' and ''2(i)'' of the AD

The same commenter asks us to change the wording in paragraph ''2(f)'' of the AD from, ''For propeller models listed in Table 1'' to ''For propeller models addressed in Table 1 of this AD.'' The commenter also asks us to change paragraph ''2(i)'' from ''Perform the actions specified in paragraph (j) of this AD on propeller models listed in Table 1 of this AD'' to ''Perform the actions specified in paragraph (j) of this AD on the propeller models addressed, regardless of serial number, in Table 1 of this AD.'' We partially agree. We will change ''propellers listed in Table 1'' to ''propeller models listed in Table 1'' throughout the regulatory text of the AD, specifically in paragraphs (e), (f), and (i), to maintain consistency.

Request To Ensure Compliance by Southern California Propeller Services With Previous ADs

The same commenter asks us to add an action requirement to ensure that previous ADs signed off by Southern California Propeller Service are re-evaluated, reinspected, or repeated as appropriate. We do not agree. The required actions specified in this AD are equivalent to any AD applicable to the affected propellers.

Conclusion

We have carefully reviewed the available data, including the comments received, and determined that air safety and the public interest require adopting the AD with the changes described previously. We have determined that these changes will neither increase the economic burden on any operator nor increase the scope of the AD.

Costs of Compliance

We estimate that 1,000 propellers installed on aircraft of U.S. registry will be affected by this AD and that it will cost on average about $3,000 to overhaul each propeller. Based on these figures, we estimate the total cost of the AD to U.S. operators to be $3,000,000.

Authority for This Rulemaking

Title 49 of the United States Code specifies the FAA's authority to issue rules on aviation safety. Subtitle I, Section 106, describes the authority of the FAA Administrator. Subtitle VII, Aviation Programs, describes in more detail the scope of the Agency's authority.

We are issuing this rulemaking under the authority described in Subtitle VII, Part A, Subpart III, Section 44701, ''General requirements.'' Under that section, Congress charges the FAA with promoting safe flight of civil aircraft in air commerce by prescribing regulations for practices, methods, and procedures the Administrator finds necessary for safety in air commerce. This regulation is within the scope of that authority because it addresses an unsafe condition that is likely to exist or develop on products identified in this rulemaking action.

Regulatory Findings

We have determined that this AD will not have federalism implications under Executive Order 13132. This AD will not have a substantial direct effect on the States, on the relationship between the national government and the States, or on the distribution of power and responsibilities among the various levels of government.

For the reasons discussed above, I certify that this AD:

(1) Is not a ''significant regulatory action'' under Executive Order 12866;

(2) Is not a ''significant rule'' under DOT Regulatory Policies and Procedures (44 FR 11034, February 26, 1979); and

(3) Will not have a significant economic impact, positive or negative, on a substantial number of small entities under the criteria of the Regulatory Flexibility Act.

We prepared a summary of the costs to comply with this AD and placed it in the AD Docket. You may get a copy of this summary by sending a request to us at the address listed under **ADDRESSES.** Include ''AD Docket No. 2003–NE–53–AD'' in your request.

List of Subjects in 14 CFR Part 39

Air transportation, Aircraft, Aviation safety, Safety.

Adoption of the Amendment

■ Accordingly, under the authority delegated to me by the Administrator, the Federal Aviation Administration amends 14 CFR part 39 as follows:

PART 39—AIRWORTHINESS DIRECTIVES

■ 1. The authority citation for part 39 continues to read as follows:

Authority: 49 U.S.C. 106(g), 40113, 44701.

§ 39.13 [Amended]

■ 2. The FAA amends § 39.13 by adding the following new airworthiness directive:

2005–14–11 Hartzell Propeller, Inc., McCauley Propeller Systems, and Sensenich Propeller Manufacturing Company, Inc. Propellers: Amendment 39–14188. Docket No. 2003–NE–53–AD.

Effective Date

(a) This airworthiness directive (AD) becomes effective August 17, 2005.

Affected ADs

(b) None.

Applicability

(c) This AD applies to the Hartzell Propeller, Inc., McCauley Propeller Systems, and Sensenich Propeller Manufacturing Company, Inc. propeller models last returned to service by Southern California Propeller Service of Inglewood, CA., listed in the following Table 1:

TABLE 1.—APPLICABLE PROPELLER MODELS

Hartzell Propeller, Inc.
()HC–()(2,3,4)Y()–().
()HC–()(2,3,4)(X,V,MV,W,Z,P,R)(F,G,L,K,R,20,30,31)–().
()HA–()–().
HC–B(3,4)(M,P,R,T)(A,N,P)–().
HC–(D,E)(4,5)(A,B,N,P)–().
McCauley Propeller Systems
()2()()3()C()()()–(): All constant speed two-bladed propeller models.
()3()()3()C()()()–(): All constant speed three-bladed propeller models.
1()()()()/(): All metal propeller models.
Sensenich Propeller Manufacturing Company, Inc.
All metal propeller models.

(d) These actions are against propeller models returned to service by Southern California Propeller Service. Southern California Propeller Service is not to be confused with propeller repair stations known as California Propeller or as Propeller Service of California. Southern California Propeller Service was issued Air Agency Certificate number of VXSR617L in 1992, which was revoked in June of 1998.

(e) For Hartzell and McCauley propeller models listed in Table 1 of this AD, any letter or number (or lack of a letter or number) could appear where open parentheses are shown in the model number. Model numbers could show any combination of letters or numbers where the model number shows parentheses with a series of numbers or letters.

(f) For propeller models listed in Table 1 of this AD, that have been overhauled since being returned to service by Southern California Propeller Service by an authorized repair station other than Southern California Propeller Service, no further action is required.

Unsafe Condition

(g) This AD results from the investigation of a failed propeller blade and subsequent inspections of various propeller models returned to service by Southern California Propeller Service, of Inglewood, CA. We are issuing this AD to prevent blade failure that could result in separation of a propeller blade and loss of control of the airplane.

Compliance

(h) You are responsible for having the actions required by this AD performed within 10 hours time-in-service after the effective date of this AD.

Required Actions

(i) Perform the actions specified in paragraph (j) of this AD on propeller models listed in Table 1 of this AD. You can find information on performing the actions in the applicable propeller manufacturer's service documentation.

(j) Perform the following actions:

(1) Disassemble,

(2) Clean,

(3) Inspect for the following:

(i) Cracks,

(ii) Corrosion or pits,

(iii) Nicks,

(iv) Scratches,

(v) Blade minimum dimensions,

(vi) Unapproved localized heating of blade,

(vii) Unapproved use of helicoil inserts in actuating pin holes,

(viii) Improperly drilled actuating pin holes,

(ix) Chemical conversion coat or paint or both applied over corrosion,

(x) Lack of chemical conversion coating,

(xi) Lack of paint on internal surfaces,

(xii) Bolts incorrectly torqued,

(xiii) Incorrect parts,

(xiv) Incorrect installation of parts,

(xv) Reinstallation of parts intended for one-time use, and

(xvi) Lack of proper shot peening.

(4) Repair and replace with serviceable parts, as necessary,

(5) Reassemble and test.

Alternative Methods of Compliance

(k) The Manager, Chicago Aircraft Certification Office, has the authority to approve alternative methods of compliance (AMOCs) for this AD if requested using the procedures found in 14 CFR 39.19.

Special Flight Permits

(l) Under 14 CFR 39.23, we are limiting the special flight permits for this AD by not allowing any flights with apparent cracks in propellers.

Related Information

(m) Special Airworthiness Information Bulletin No. NE–01–19, dated March 20, 2001, pertains to the subject of this AD.

Issued in Burlington, Massachusetts, on July 5, 2005.

Francis A. Favara,

Acting Manager, Engine and Propeller Directorate, Aircraft Certification Service.

[FR Doc. 05–13740 Filed 7–12–05; 8:45 am]

BILLING CODE 4910–13–P

DEPARTMENT OF THE TREASURY

Internal Revenue Service

26 CFR Parts 1 and 602

[TD 9209]

RIN 1545–BC69

Section 179 Elections

AGENCY: Internal Revenue Service (IRS), Treasury.

ACTION: Final regulations.

SUMMARY: This document contains final regulations relating to the election to expense the cost of property subject to section 179 of the Internal Revenue Code (Code). The regulations reflect changes to the law made by section 202 of the Jobs and Growth Tax Relief Reconciliation Act of 2003 and section 201 of the American Jobs Creation Act of 2004.

DATES: *Effective Date.* These regulations are effective July 13, 2005.

Applicability Dates: For dates of applicability, see § 1.179–6.

FOR FURTHER INFORMATION CONTACT: Winston H. Douglas, (202) 622–3110 (not a toll-free number).

SUPPLEMENTARY INFORMATION:

Paperwork Reduction Act

The collections of information contained in these final regulations have been reviewed and approved by the Office of Management and Budget in accordance with the Paperwork Reduction Act of 1995 (44 U.S.C. 3507(d)) under control number 1545–1201. The collections of information in these final regulations are in §§ 1.179–2 and 1.179–5. This information is required by § 1.179–2 to ensure that married individuals filing separate returns properly allocate the cost of section 179 property elected to be expensed in a taxable year and that the dollar limitation is properly allocated among the component members of a controlled group. Also, this information is required by § 1.179–5 to ensure the specific identification of each piece of acquired section 179 property and reflect how and from whom such property was placed in service. This information will be used for audit and examination purposes.

Estimated total annual reporting and/or recordkeeping burden: 3,015,000 hours.

The estimated annual burden per respondent/recordkeeper varies from .50 to 1 hour, depending on individual circumstances, with an estimated average of .75 hour.

Estimated number of respondents and/or recordkeepers: 4,025,000.

Estimated frequency of responses: Annually.

Comments on the collection of information should be sent to the Office of Management and Budget, Attn: Desk Officer for the Department of the Treasury, Office of Information and Regulatory Affairs, Washington, DC 20503, with copies to the Internal Revenue Service, Attn: IRS Reports Clearance Officer, SE:W:CAR:MP:T:T:SP, Washington, DC 20224. Comments are specifically requested concerning how the burden of complying with the collection of information may be minimized, including through the application of automated collection techniques or other forms of information technology.

An agency may not conduct or sponsor, and a person is not required to respond to, a collection of information unless it displays a valid control number assigned by the Office of Management and Budget.

Books or records relating to a collection of information must be retained as long as their contents might become material in the administration of any internal revenue law. Generally, tax returns and tax return information are confidential, as required by 26 U.S.C. 6103.

Background

This document contains amendments to 26 CFR parts 1 and 602. On August 4, 2004, the IRS and Treasury Department published temporary regulations (TD 9146) in the **Federal Register** (69 FR 46982) relating to the election to expense the cost of property subject to section 179 of the Code. The temporary regulations reflected changes to the law made by section 202 of the Jobs and Growth Tax Relief Reconciliation Act of 2003 (JGTRRA), Public Law 108–27 (117 Stat. 752). On the same date, the IRS published a notice of proposed rulemaking (REG–152549–03) cross-referencing the temporary regulations in the **Federal Register** (69 FR 47043). No comments were received from the public in response to the notice of proposed rulemaking and no public hearing was requested or held. However, section 201 of the American Jobs Creation Act of 2004, Public Law 108–357 (118 Stat. 1418), extended the changes that were made by JGTRRA for an additional two years. The proposed regulations are adopted as amended by this Treasury decision, and the corresponding temporary regulations are removed. The revisions are discussed below.

Explanation of Provisions

Scope

The changes made to section 179 by section 202 of JGTTRA were applicable for section 179 property placed in service by a taxpayer in taxable years beginning after 2002 and before 2006. Section 202 of JGTRRA expanded the definition of section 179 property to include off-the-shelf computer software (a category of intangible property) and increased the $25,000 and $200,000 limitation amounts of section 179(b)(1) and (b)(2), respectively, to $100,000 and $400,000, respectively. In addition, the $100,000 and $400,000 amounts were indexed annually for inflation for taxable years beginning after 2003 and before 2006. JGTRRA also modified section 179 to provide that any election or specification for taxable years beginning after 2002 and before 2006 may be revoked by the taxpayer with respect to any section 179 property, and that such revocation, once made, shall be irrevocable. With respect to a taxable year beginning after 2002 and before 2006, the conference agreement permitted taxpayers to make or revoke an expensing election on an amended Federal tax return without the consent of the Commissioner. The temporary regulations reflected the changes to section 179 made by section 202 of JGTTRA.

Subsequent to the issuance of the proposed regulations and the temporary regulations, the American Jobs Creation Act of 2004 (AJCA) was enacted. Section 201 of AJCA extends the changes that were made by JGTTRA for an additional two years. The final regulations retain the rules relating to the JGTTRA changes contained in the temporary regulations. The final regulations also apply the AJCA's two-year extension of the JGTTRA changes to section 179 property placed in service by a taxpayer in a taxable year beginning after 2002 and before 2008.

Manner of Making an Election or Revoking an Election Under Section 179

The final regulations provide that for any taxable year beginning after 2002 and before 2008, a section 179 election or a revocation of a section 179 election may be made on an amended Federal tax return for that taxable year to which the election or revocation applies. For any taxable year beginning before 2003, a late section 179 election or a revocation of a section 179 election generally is made by a taxpayer submitting a request for a letter ruling. Accordingly, the final regulations clarify that a section 179 election or a revocation of a section 179 election generally must not be made in any other manner (for example, a section 179 election or revocation of a section 179 election cannot be made through a request under section 446(e) to change the taxpayer's method of accounting).

Special Analyses

It has been determined that this Treasury decision is not a significant regulatory action as defined in Executive Order 12866. Therefore, a regulatory assessment is not required. It also has been determined that section 553(b) of the Administrative Procedure Act (5 U.S.C. chapter 5) does not apply to these regulations. It is hereby certified that the collection of information in these regulations will not have a significant economic impact on a substantial number of small entities. This certification is based upon the fact that the amount of time necessary to record and retain the required information will be minimal for those taxpayers electing to expense the cost of section 179 property. The estimated annual burden for each such taxpayer varies from .50 to 1 hour, depending on individual circumstances, with an estimated average of .75 hour. Therefore, a regulatory flexibility analysis under the Regulatory Flexibility Act (5 U.S.C. chapter 6) is not required. Pursuant to section 7805(f) of the Code, the notice of proposed rulemaking preceding these final regulations was submitted to the Chief Counsel for Advocacy of the Small Business Administration for comment on its impact on small business.

Drafting Information

The principal author of these regulations is Winston H. Douglas, Office of the Associate Chief Counsel (Passthroughs and Special Industries). However, other personnel from the IRS and Treasury Department participated in their development.

List of Subjects

26 CFR Part 1

Income taxes, Reporting and recordkeeping requirements.

26 CFR Part 602

Reporting and recordkeeping requirements.

Adoption of Amendments to the Regulations

■ Accordingly, 26 CFR parts 1 and 602 are amended as follows:

PART 1—INCOME TAXES

■ **Paragraph 1.** The authority citation for part 1 continues to read, in part, as follows:

Authority: 26 U.S.C. 7805 * * *

■ **Par. 2.** Section 1.179–0 is amended as follows:

■ 1. The entries for § 1.179–2(b)(1) and (b)(2), § 1.179–4(a), and § 1.179–5(c) are revised.

■ 2. The entries for § 1.179–5(d) and § 1.179–6(a), (b), and (c) are added.

■ 3. Sections 1.179–2T, 1.179–4T, 1.179–5T, and 1.179–6T are removed.

The revisions and additions read as follows:

§ 1.179–0 Table of contents for section 179 expensing rules.

* * * * *

§ 1.179–2 Limitations on amount subject to section 179 election.

* * * * *

(b) * * *

(1) In general.

(2) Excess section 179 property.

* * * * *

§ 1.179–4 Definitions.

(a) Section 179 property.

* * * * *

§ 1.179–5 Time and manner of making election.

* * * * *

(c) Section 179 property placed in service by the taxpayer in a taxable year beginning after 2002 and before 2008.

(d) Election or revocation must not be made in any other manner.

§ 1.179–6 Effective dates.

(a) In general.

(b) Section 179 property placed in service by the taxpayer in a taxable year beginning after 2002 and before 2008.

(c) Application of § 1.179–5(d).

§ 1.179–2 [Amended]

■ **Par. 3.** Section 1.179–2 is amended by revising paragraphs (b)(1) and (b)(2)(ii) to read as follows:

§ 1.179–2 Limitations on amount subject to section 179 election.

* * * * *

(b) *Dollar limitation*—(1) *In general.* The aggregate cost of section 179 property that a taxpayer may elect to expense under section 179 for any taxable year beginning in 2003 and thereafter is $25,000 ($100,000 in the case of taxable years beginning after 2002 and before 2008 under section 179(b)(1), indexed annually for inflation under section 179(b)(5) for taxable years beginning after 2003 and before 2008), reduced (but not below zero) by the amount of any excess section 179 property (described in paragraph (b)(2) of this section) placed in service during the taxable year.

(b) * * *

(2) * * *

(ii) $200,000 ($400,000 in the case of taxable years beginning after 2002 and before 2008 under section 179(b)(2), indexed annually for inflation under section 179(b)(5) for taxable years beginning after 2003 and before 2008).

* * * * *

§ 1.179–2T [Removed]

■ **Par. 4.** Section 1.179–2T is removed.

§ 1.179–4 [Amended]

■ **Par. 5.** Section 1.179–4 is amended by revising the introductory text and paragraph (a) to read as follows:

§ 1.179–4 Definitions.

The following definitions apply for purposes of section 179 and §§ 1.179–1 through 1.179–6:

(a) *Section 179 property.* The term *section 179 property* means any tangible property described in section 179(d)(1) that is acquired by purchase for use in the active conduct of the taxpayer's trade or business (as described in § 1.179–2(c)(6)). For taxable years beginning after 2002 and before 2008, the term *section 179 property* includes computer software described in section 179(d)(1) that is placed in service by the taxpayer in a taxable year beginning after 2002 and before 2008 and is acquired by purchase for use in the active conduct of the taxpayer's trade or business (as described in 1.179–2(c)(6)). For purposes of this paragraph (a), the term *trade or business* has the same meaning as in section 162 and the regulations under section 162.

* * * * *

§ 1.179–4T [Removed]

■ **Par. 6.** Section 1.179–4T is removed.

§ 1.179–5 [Amended]

■ **Part. 7.** Section 1.179–5 is amended by revising paragraph (c) and adding paragraph (d) to read as follows:

§ 1.179–5 Time and manner of making election.

* * * * *

(c) *Section 179 property placed in service by the taxpayer in a taxable year beginning after 2002 and before 2008*—(1) *In general.* For any taxable year beginning after 2002 and before 2008, a taxpayer is permitted to make or revoke an election under section 179 without the consent of the Commissioner on an amended Federal tax return for that taxable year. This amended return must be filed within the time prescribed by law for filing an amended return for such taxable year.

(2) *Election*—(i) *In general.* For any taxable year beginning after 2002 and before 2008, a taxpayer is permitted to make an election under section 179 on an amended Federal tax return for that taxable year without the consent of the Commissioner. Thus, the election under section 179 and § 1.179–1 to claim a section 179 expense deduction for section 179 property may be made on an amended Federal tax return for the taxable year to which the election applies. The amended Federal tax return must include the adjustment to taxable income for the section 179 election and any collateral adjustments to taxable income or to the tax liability (for example, the amount of depreciation allowed or allowable in that taxable year for the item of section 179 property to which the election pertains). Such adjustments must also be made on amended Federal tax returns for any affected succeeding taxable years.

(ii) *Specifications of elections.* Any election under section 179 must specify the items of section 179 property and the portion of the cost of each such item to be taken into account under section 179(a). Any election under section 179 must comply with the specification requirements of section 179(c)(1)(A), § 1.179–1(b), and § 1.179–5(a). If a taxpayer elects to expense only a portion of the cost basis of an item of section 179 property for a taxable year beginning after 2002 and before 2008 (or did not elect to expense any portion of the cost basis of the item of section 179 property), the taxpayer is permitted to file an amended Federal tax return for that particular taxable year and increase the portion of the cost of the item of section 179 property to be taken into account under section 179(a) (or elect to expense any portion of the cost basis of the item of section 179 property if no prior election was made) without the consent of the Commissioner. Any such increase in the amount expensed under section 179 is not deemed to be a revocation of the prior election for that particular taxable year.

(3) *Revocation*—(i) *In general.* Section 179(c)(2) permits the revocation of an entire election or specification, or a portion of the selected dollar amount of a specification. The term *specification* in section 179(c)(2) refers to both the selected specific item of section 179 property subject to a section 179 election and the selected dollar amount allocable to the specific item of section 179 property. Any portion of the cost basis of an item of section 179 property

subject to an election under section 179 for a taxable year beginning after 2002 and before 2008 may be revoked by the taxpayer without the consent of the Commissioner by filing an amended Federal tax return for that particular taxable year. The amended Federal tax return must include the adjustment to taxable income for the section 179 revocation and any collateral adjustments to taxable income or to the tax liability (for example, allowable depreciation in that taxable year for the item of section 179 property to which the revocation pertains). Such adjustments must also be made on amended Federal tax returns for any affected succeeding taxable years. Reducing or eliminating a specified dollar amount for any item of section 179 property with respect to any taxable year beginning after 2002 and before 2008 results in a revocation of that specified dollar amount.

(ii) *Effect of revocation.* Such revocation, once made, shall be irrevocable. If the selected dollar amount reflects the entire cost of the item of section 179 property subject to the section 179 election, a revocation of the entire selected dollar amount is treated as a revocation of the section 179 election for that item of section 179 property and the taxpayer is unable to make a new section 179 election with respect to that item of property. If the selected dollar amount is a portion of the cost of the item of section 179 property, revocation of a selected dollar amount shall be treated as a revocation of only that selected dollar amount. The revoked dollars cannot be the subject of a new section 179 election for the same item of property.

(4) *Examples.* The following examples illustrate the rules of this paragraph (c):

Example 1. Taxpayer, a sole proprietor, owns and operates a jewelry store. During 2003, Taxpayer purchased and placed in service two items of section 179 property—a cash register costing $4,000 (5-year MACRS property) and office furniture costing $10,000 (7-year MACRS property). On his 2003 Federal tax return filed on April 15, 2004, Taxpayer elected to expense under section 179 the full cost of the cash register and, with respect to the office furniture, claimed the depreciation allowable. In November 2004, Taxpayer determines it would have been more advantageous to have made an election under section 179 to expense the full cost of the office furniture rather than the cash register. Pursuant to paragraph (c)(1) of this section, Taxpayer is permitted to file an amended Federal tax return for 2003 revoking the section 179 election for the cash register, claiming the depreciation allowable in 2003 for the cash register, and making an election to expense under section 179 the cost of the office furniture. The amended return must include an adjustment for the depreciation previously claimed in 2003 for the office furniture, an adjustment for the depreciation allowable in 2003 for the cash register, and any other collateral adjustments to taxable income or to the tax liability. In addition, once Taxpayer revokes the section 179 election for the entire cost basis of the cash register, Taxpayer can no longer expense under section 179 any portion of the cost of the cash register.

Example 2. Taxpayer, a sole proprietor, owns and operates a machine shop that does specialized repair work on industrial equipment. During 2003, Taxpayer purchased and placed in service one item of section 179 property—a milling machine costing $135,000. On Taxpayer's 2003 Federal tax return filed on April 15, 2004, Taxpayer elected to expense under section 179 $5,000 of the cost of the milling machine and claimed allowable depreciation on the remaining cost. Subsequently, Taxpayer determines it would have been to Taxpayer's advantage to have elected to expense $100,000 of the cost of the milling machine on Taxpayer's 2003 Federal tax return. In November 2004, Taxpayer files an amended Federal tax return for 2003, increasing the amount of the cost of the milling machine that is to be taken into account under section 179(a) to $100,000, decreasing the depreciation allowable in 2003 for the milling machine, and making any other collateral adjustments to taxable income or to the tax liability. Pursuant to paragraph (c)(2)(ii) of this section, increasing the amount of the cost of the milling machine to be taken into account under section 179(a) supplements the portion of the cost of the milling machine that was already taken into account by the original section 179 election made on the 2003 Federal tax return and no revocation of any specification with respect to the milling machine has occurred.

Example 3. Taxpayer, a sole proprietor, owns and operates a real estate brokerage business located in a rented storefront office. During 2003, Taxpayer purchases and places in service two items of section 179 property—a laptop computer costing $2,500 and a desktop computer costing $1,500. On Taxpayer's 2003 Federal tax return filed on April 15, 2004, Taxpayer elected to expense under section 179 the full cost of the laptop computer and the full cost of the desktop computer. Subsequently, Taxpayer determines it would have been to Taxpayer's advantage to have originally elected to expense under section 179 only $1,500 of the cost of the laptop computer on Taxpayer's 2003 Federal tax return. In November 2004, Taxpayer files an amended Federal tax return for 2003 reducing the amount of the cost of the laptop computer that was taken into account under section 179(a) to $1,500, claiming the depreciation allowable in 2003 on the remaining cost of $1,000 for that item, and making any other collateral adjustments to taxable income or to the tax liability. Pursuant to paragraph (c)(3)(ii) of this section, the $1,000 reduction represents a revocation of a portion of the selected dollar amount and no portion of those revoked dollars may be the subject of a new section 179 election for the laptop computer.

Example 4. Taxpayer, a sole proprietor, owns and operates a furniture making business. During 2003, Taxpayer purchases and places in service one item of section 179 property—an industrial-grade cabinet table saw costing $5,000. On Taxpayer's 2003 Federal tax return filed on April 15, 2004, Taxpayer elected to expense under section 179 $3,000 of the cost of the saw and, with respect to the remaining $2,000 of the cost of the saw, claimed the depreciation allowable. In November 2004, Taxpayer files an amended Federal tax return for 2003 revoking the selected $3,000 amount for the saw, claiming the depreciation allowable in 2003 on the $3,000 cost of the saw, and making any other collateral adjustments to taxable income or to the tax liability. Subsequently, in December 2004, Taxpayer files a second amended Federal tax return for 2003 selecting a new dollar amount of $2,000 for the saw, including an adjustment for the depreciation previously claimed in 2003 on the $2,000, and making any other collateral adjustments to taxable income or to the tax liability. Pursuant to paragraph (c)(2)(ii) of this section, Taxpayer is permitted to select a new selected dollar amount to expense under section 179 encompassing all or a part of the initially non-elected portion of the cost of the elected item of section 179 property. However, no portion of the revoked $3,000 may be the subject of a new section 179 dollar amount selection for the saw. In December 2005, Taxpayer files a third amended Federal tax return for 2003 revoking the entire selected $2,000 amount with respect to the saw, claiming the depreciation allowable in 2003 for the $2,000, and making any other collateral adjustments to taxable income or to the tax liability. Because Taxpayer elected to expense, and subsequently revoke, the entire cost basis of the saw, the section 179 election for the saw has been revoked and Taxpayer is unable to make a new section 179 election with respect to the saw.

(d) *Election or revocation must not be made in any other manner.* Any election or revocation specified in this section must be made in the manner prescribed in paragraphs (a), (b), and (c) of this section. Thus, this election or revocation must not be made by the taxpayer in any other manner (for example, an election or a revocation of an election cannot be made through a request under section 446(e) to change the taxpayer's method of accounting), except as otherwise expressly provided by the Internal Revenue Code, the regulations under the Code, or other guidance published in the Internal Revenue Bulletin.

§ 1.179–5T [Removed]

■ **Par. 8.** Section 1.179–5T is removed.

§ 1.179–6 [Removed]

■ **Par. 9.** Section 1.179–6 is removed.

§ 1.179–6T [Amended]

■ **Par. 10.** Section 1.179–6T is redesignated as § 1.179–6 and amended as follows:

■ 1. The first sentence of paragraph (a) is revised.

■ 2. Paragraph (b) is revised.

■ 3. Paragraph (c) is added.

The revisions and addition read as follows:

§ 1.179–6 Effective dates.

(a) * * * Except as provided in paragraphs (b) and (c) of this section, the provisions of §§ 1.179–1 through 1.179–5 apply for property placed in service by the taxpayer in taxable years ending after January 25, 1993. * * *

(b) *Section 179 property placed in service by the taxpayer in a taxable year beginning after 2002 and before 2008.* The provisions of § 1.179–2(b)(1) and (b)(2)(ii), the second sentence of § 1.179–4(a), and the provisions of § 1.179–5(c), reflecting changes made to section 179 by the Jobs and Growth Tax Relief Reconciliation Act of 2003 (117 Stat. 752) and the American Jobs Creation Act of 2004 (118 Stat. 1418), apply for property placed in service in taxable years beginning after 2002 and before 2008.

(c) *Application of § 1.179–5(d).* Section 1.179–5(d) applies on or after July 12, 2005.

PART 602—OMB CONTROL NUMBERS UNDER THE PAPERWORK REDUCTION ACT

■ **Par. 11.** The authority citation for part 602 continues to read, in part, as follows:

Authority: 26 U.S.C. 7805.

■ **Par. 12.** In § 602.101, paragraph (b) is amended by removing the entries for ''1.179–2T'' and ''1.179–5T'' and adding a new entry for ''1.179–5'' in numerical order to the table to read as follows:

§ 602.101 OMB Control numbers.

* * * * *

(b) * * *

CFR part or section where identified and described	Current OMB control No.
* * * * *	
1.179–5	1545–1201
* * * * *	

Mark E. Matthews,

Deputy Commissioner for Services and Enforcement.

Approved: June 23, 2005.

Eric Solomon,

Acting Deputy Assistant Secretary of the Treasury (Tax Policy).

[FR Doc. 05–13680 Filed 7–12–05; 8:45 am]

BILLING CODE 4830–01–P

ENVIRONMENTAL PROTECTION AGENCY

40 CFR Part 52

[R07–OAR–2005–MO–0003; FRL–7936–7]

Approval and Promulgation of Implementation Plans; State of Missouri

AGENCY: Environmental Protection Agency (EPA).

ACTION: Final rule.

SUMMARY: EPA is announcing the approval of an amendment to the statewide NO_X rule for the state of Missouri. The purpose of this rule is to reduce the state's contribution to the St. Louis 8-hour ozone nonattainment area. Consequently, the reductions in NO_X emissions will also help to reduce the amount of PM2.5 precursors in the area. This action is necessary to complete the process of incorporating the amended rule into Missouri's ozone SIP.

DATES: This rule is effective on August 12, 2005.

FOR FURTHER INFORMATION CONTACT: Michael Jay at (913) 551–7460 or by e-mail at *jay.michael@epa.gov*.

SUPPLEMENTARY INFORMATION: Throughout this document whenever ''we'', ''us'', or ''our'' is used, we mean EPA. This section provides additional information by addressing the following questions:

What is a SIP?

What is the Federal approval process for a SIP?

What does Federal approval of a state regulation mean to me?

What is being addressed in this document?

How does the statewide NO_X rule relate to the NO_X SIP call?

Have the requirements for approval of a SIP revision been met?

What action is EPA taking?

What Is a SIP?

Section 110 of the Clean Air Act (CAA) requires states to develop air pollution regulations and control strategies to ensure that state air quality meets the national ambient air quality standards established by EPA. These ambient standards are established under section 109 of the CAA, and they currently address six criteria pollutants. These pollutants are: Carbon monoxide, nitrogen dioxide, ozone, lead, particulate matter, and sulfur dioxide.

Each state must submit these regulations and control strategies to us for approval and incorporation into the Federally-enforceable SIP.

Each Federally-approved SIP protects air quality primarily by addressing air pollution at its point of origin. These SIPs can be extensive, containing state regulations or other enforceable documents and supporting information such as emission inventories, monitoring networks, and modeling demonstrations.

What Is the Federal Approval Process for a SIP?

In order for state regulations to be incorporated into the Federally-enforceable SIP, states must formally adopt the regulations and control strategies consistent with state and Federal requirements. This process generally includes a public notice, public hearing, public comment period, and a formal adoption by a state-authorized rulemaking body.

Once a state rule, regulation, or control strategy is adopted, the state submits it to us for inclusion into the SIP. We must provide public notice and seek additional public comment regarding the proposed Federal action on the state submission. If adverse comments are received, they must be addressed prior to any final Federal action by us.

All state regulations and supporting information approved by EPA under section 110 of the CAA are incorporated into the Federally-approved SIP. Records of such SIP actions are maintained in the Code of Federal Regulations (CFR) at title 40, part 52, entitled ''Approval and Promulgation of Implementation Plans.'' The actual state regulations which are approved are not reproduced in their entirety in the CFR outright but are ''incorporated by reference,'' which means that we have approved a given state regulation with a specific effective date.

What Does Federal Approval of a State Regulation Mean to Me?

Enforcement of the state regulation before and after it is incorporated into the Federally-approved SIP is primarily a state responsibility. However, after the regulation is Federally approved, we are authorized to take enforcement action against violators. Citizens are also offered legal recourse to address violations as described in section 304 of the CAA.

What Is Being Addressed in This Document?

We are taking final action to approve the Missouri Department of Natural Resources' (MDNR) request to include, as a revision to Missouri's ozone SIP, an amendment to rule 10 CSR 10–6.350, ''Emissions Limitations and Emissions Trading of Oxides of Nitrogen'' (known hereafter as ''statewide NO_X rule''), which was incorporated into the SIP on

December 28, 2000 (65 FR 82285). The Missouri Air Conservation Commission adopted the amended rule on April 24, 2003. The rule became effective under state law on June 23, 2003. The rule was submitted to EPA on September 18, 2003 and included the comments on the rule during the state's adoption process, and the state's response to comments, and other information necessary to meet EPA's completeness criteria.

EPA proposed to approve the revision of this rule as an amendment to the Missouri SIP in the **Federal Register** on March 31, 2005 (70 FR 16472). The comment period closed on May 2, 2005. No comments were received. We are taking final action to approve the rule amendment as a revision to the current SIP approved statewide NO_X rule for the state of Missouri.

How Does the Statewide NO_X Rule Relate to the NO_X SIP Call?

As stated previously, the statewide NO_X rule is designed to achieve emissions reductions to improve air quality in the St. Louis area. Missouri is also subject to a requirement to achieve certain NO_X reductions to eliminate its significant contribution to ozone nonattainment problems in other areas, relating to NO_X emissions transported from Missouri to other states. (See, 69 FR 21604, April 21, 2004.) Therefore, separate from today's rulemaking, Missouri is in the process of adopting the requirements of the NO_X SIP Call and today's action does not relieve the state of this obligation.

Have the Requirements for Approval of a SIP Revision Been Met?

The state submittal has met the public notice requirements for SIP submissions in accordance with 40 CFR 51.102. The submittal also satisfied the completeness criteria of 40 CFR part 51, appendix V. In addition, as explained above and in more detail in the technical support document that is part of this document and in the March 31, 2005, proposal, the revision meets the substantive SIP requirements of the CAA, including section 110 and implementing regulations.

What Action Is EPA Taking?

EPA is approving the rule amendment as a revision to the current SIP-approved statewide NO_X rule for the state of Missouri.

Statutory and Executive Order Reviews

Under Executive Order 12866 (58 FR 51735, October 4, 1993), this action is not a ''significant regulatory action'' and therefore is not subject to review by the Office of Management and Budget. For this reason, this action is also not subject to Executive Order 13211, ''Actions Concerning Regulations That Significantly Affect Energy Supply, Distribution, or Use'' (66 FR 28355, May 22, 2001). This action merely approves state law as meeting Federal requirements and imposes no additional requirements beyond those imposed by state law. Accordingly, the Administrator certifies that this rule will not have a significant economic impact on a substantial number of small entities under the Regulatory Flexibility Act (5 U.S.C. 601 *et seq.*). Because this rule approves pre-existing requirements under state law and does not impose any additional enforceable duty beyond that required by state law, it does not contain any unfunded mandate or significantly or uniquely affect small governments, as described in the Unfunded Mandates Reform Act of 1995 (Pub. L. 104–4).

This rule also does not have tribal implications because it will not have a substantial direct effect on one or more Indian tribes, on the relationship between the Federal Government and Indian tribes, or on the distribution of power and responsibilities between the Federal Government and Indian tribes, as specified by Executive Order 13175 (65 FR 67249, November 9, 2000). This action also does not have Federalism implications because it does not have substantial direct effects on the states, on the relationship between the national government and the states, or on the distribution of power and responsibilities among the various levels of government, as specified in Executive Order 13132 (64 FR 43255, August 10, 1999). This action merely approves a state rule implementing a Federal standard, and does not alter the relationship or the distribution of power and responsibilities established in the CAA. This rule also is not subject to Executive Order 13045 ''Protection of Children from Environmental Health Risks and Safety Risks'' (62 FR 19885, April 23, 1997), because it is not economically significant.

In reviewing SIP submissions, EPA's role is to approve state choices, provided that they meet the criteria of the CAA. In this context, in the absence of a prior existing requirement for the state to use voluntary consensus standards (VCS), EPA has no authority to disapprove a SIP submission for failure to use VCS. It would thus be inconsistent with applicable law for EPA, when it reviews a SIP submission, to use VCS in place of a SIP submission that otherwise satisfies the provisions of the CAA. Thus, the requirements of section 12(d) of the National Technology Transfer and Advancement Act of 1995 (15 U.S.C. 272 note) do not apply. This rule does not impose an information collection burden under the provisions of the Paperwork Reduction Act of 1995 (44 U.S.C. 3501 *et seq.*).

The Congressional Review Act, 5 U.S.C. 801 *et seq.,* as added by the Small Business Regulatory Enforcement Fairness Act of 1996, generally provides that before a rule may take effect, the agency promulgating the rule must submit a rule report, which includes a copy of the rule, to each House of the Congress and to the Comptroller General of the United States. EPA will submit a report containing this rule and other required information to the U.S. Senate, the U.S. House of Representatives, and the Comptroller General of the United States prior to publication of the rule in the **Federal Register.** A major rule cannot take effect until 60 days after it is published in the **Federal Register.** This action is not a ''major rule'' as defined by 5 U.S.C. 804(2).

Under section 307(b)(1) of the CAA, petitions for judicial review of this action must be filed in the United States Court of Appeals for the appropriate circuit by September 12, 2005. Filing a petition for reconsideration by the Administrator of this final rule does not affect the finality of this rule for the purposes of judicial review nor does it extend the time within which a petition for judicial review may be filed, and shall not postpone the effectiveness of such rule or action. This action may not be challenged later in proceedings to enforce its requirements. (*See* section 307(b)(2).)

List of Subjects in 40 CFR Part 52

Environmental protection, Air pollution control, Carbon monoxide, Incorporation by reference, Intergovernmental relations, Lead, Nitrogen dioxide, Ozone, Particulate matter, Reporting and recordkeeping requirements, Sulfur oxides, Volatile organic compounds.

Dated: July 5, 2005.

James B. Gulliford,

Regional Administrator, Region 7.

■ Chapter I, Title 40 of the Code of Federal Regulations is amended as follows:

PART 52—[AMENDED]

■ 1. The authority citation for part 52 continues to read as follows:

Authority: 42 U.S.C. 7401 *et seq.*

Subpart AA—Missouri

■ 2. In § 52.1320(c) the table is amended under chapter 6 by revising the entry for ''10–6.350'' to read as follows:

§ 52.1320 Identification of plan.

* * * * *

(c) * * *

EPA-APPROVED MISSOURI REGULATIONS

Missouri citation	Title	State effective date	EPA approval date	Explanation
Missouri Department of Natural Resources				
*	*	*	*	*
Chapter 6—Air Quality Standards, Definitions, Sampling and Reference Methods, and Air Pollution Control Regulations for the State of Missouri				
*	*	*	*	*
10–6.350	Emissions Limitations and Emissions Trading of Oxides of Nitrogen.	06/23/03	7/13/05 [Insert FR page number where the document begins].	
*	*	*	*	*

* * * * *

[FR Doc. 05–13696 Filed 7–12–05; 8:45 am]

BILLING CODE 6560–50–P

ENVIRONMENTAL PROTECTION AGENCY

40 CFR Part 52

[R06–OAR–2005–TX–0008; FRL–7936–8]

Approval and Promulgation of Air Quality Implementation Plans; Texas; Revisions To Control Volatile Organic Compound Emissions; Correction

AGENCY: Environmental Protection Agency (EPA).

ACTION: Final rule; correction.

SUMMARY: EPA issued a direct final rule on March 29, 2005, (70 FR 15769), that approved Texas State Implementation Plan (SIP) revisions. The approved revisions pertain to regulations to control volatile organic compound (VOC) emissions from solvent degreasing processes, cutback asphalt, and motor vehicle fuel dispensing facilities. The language in the March 29, 2005 **Federal Register** amended the table in 40 CFR 52.2270(c) titled ''EPA Approved Regulations in the Texas SIP''. The amendatory language failed to: Update the table for control of vehicle refueling emissions (Stage II) at motor vehicle fuel dispensing facilities, and add a table heading for cutback asphalt regulations. This document corrects these two mistakes.

DATES: This correction is effective on July 13, 2005.

FOR FURTHER INFORMATION CONTACT: Carl Young, Air Planning Section (6PD–L), Environmental Protection Agency, Region 6, 1445 Ross Avenue, Suite 700, Dallas, Texas 75202–2733, telephone 214–665–6645; fax number 214–665–7263; e-mail address *young.carl@epa.gov.*

SUPPLEMENTARY INFORMATION: EPA issued a direct final rule on March 29, 2005, (70 FR 15769), that approved Texas SIP revisions. The revisions pertain to regulations to control VOC emissions from solvent degreasing processes, cutback asphalt, and motor vehicle fuel dispensing facilities. The revisions approved were §§ 115.227, 115.229, 115.239–115.249, 115.412, 115.413, 115.415–115.417, 115.419, 115.512, 115.516, 115.517, and 115.519 in 30 TAC Chapter 115, Control of Air Pollution from Volatile Organic Compounds. The language in the March 29, 2005 **Federal Register** amended the table in 40 CFR 52.2270(c) titled ''EPA Approved Regulations in the Texas SIP'' under Chapter 115 (Reg 5). The amendatory language (1) Added a new heading titled ''Division 1: Degreasing Processes'' in Subchapter E: Solvent-Using Processes, and (2) updated the table entries for Sections 115.227, 115.229, 115.239, 115.412, 115.413, 115.415, 115.416, 115.417, 115.419, 115.512, 115.516, 115.517, and 115.519. The amendatory language failed to update table entries for Sections 115.240–115.249, Control of Vehicle Refueling Emissions (Stage II) at Motor Vehicle Fuel Dispensing. The amendatory language also failed to update the table with an additional heading for ''Cutback Asphalt''. This document corrects these two mistakes.

List of Subjects in 40 CFR Part 52

Environmental protection, Air pollution control, Intergovernmental relations, Ozone, Reporting and recordkeeping requirements, Volatile organic compounds.

Dated: June 24, 2005.

Richard E. Greene,

Regional Administrator, Region 6.

■ 40 CFR part 52 is amended as follows:

PART 52—[AMENDED]

■ 1. The authority citation for part 52 continues to read as follows:

Authority: 42 U.S.C. 7402 *et seq.*

Subpart SS—Texas

■ 2. The table in § 52.2270(c) entitled ''EPA Approved Regulations in the Texas SIP'' under Chapter 115 (Reg 5) is amended by:

■ a. Adding a new centered heading ''Division 1: Cutback Asphalt'' immediately following the centered heading ''Subchapter F: Miscellaneous Industrial Sources'';

■ b. Revising entries for Sections 115.240–115.249 in Subchapter C, Division 4 to read as follows:

§ 52.2270 Identification of plan.

* * * * *

(c) * * *

EPA-APPROVED REGULATIONS IN THE TEXAS SIP

State citation	Title/subject	State approval/submittal date	EPA approval date	Explanation
*	*	*	*	*
	Chapter 115 (Reg 5)—Control of Air Pollution From Volatile Organic Compounds			
*	*	*	*	*
	Subchapter C: Volatile Organic Compound Transfer Operations			
*	*	*	*	*
	Division 4: Control of Vehicle Refueling Emissions (Stage II) at Motor Vehicle Fuel Dispensing Facilities			
Section 115.240.	Stage II Vapor Recovery Definitions and List of California Air Resources Board Certified Stage II Equipment.	11/6/02	3/29/05, 70 FR 15773.	
Section 115.241.	Emission Specifications	11/6/02	3/29/05, 70 FR 15773.	
Section 155.242.	Control Requirements	11/6/02	3/29/05, 70 FR 15773.	
Section 115.243.	Alternate Control Requirements.	11/6/02	3/29/05, 70 FR 15773.	
Section 115.244..	Inspection Requirements	11/6/02	3/29/05, 70 FR 15773.	
Section 115.245.	Testing Requirements	11/6/02	3/29/05, 70 FR 15773.	
Section 115.246.	Recordkeeping Requirements.	11/6/02	3/29/05, 70 FR 15773.	
Section 115.247.	Exemptions	11/6/02	3/29/05, 70 FR 15773.	
Section 115.248.	Training Requirements	11/6/02	3/29/05, 70 FR 15773.	
Section 115.249.	Counties and Compliance Schedules.	11/6/02	3/29/05, 70 FR 15773.	
*	*	*	*	*

[FR Doc. 05–13695 Filed 7–12–05; 8:45 am]
BILLING CODE 6560–50–P

ENVIRONMENTAL PROTECTION AGENCY

40 CFR Part 180

[OPP–2005–0142; FRL–7720–1]

Imidacloprid; Pesticide Tolerance

AGENCY: Environmental Protection Agency (EPA).

ACTION: Final rule.

SUMMARY: This regulation establishes a tolerance for residues of imidacloprid 1-[(6-chloro-3-pyridinyl)methyl]-*N*-nitro-2-imidazolidinimine in or on soybean, seed and soybean, meal. Gustafson LLC requested this tolerance under the Federal Food, Drug, and Cosmetic Act (FFDCA), as amended by the Food Quality Protection Act of 1996 (FQPA). EPA is also deleting certain imidacloprid tolerances that are no longer needed as a result of this action.

DATES: This regulation is effective July 13, 2005. Objections and requests for hearings must be received on or before September 12, 2005.

ADDRESSES: To submit a written objection or hearing request follow the detailed instructions as provided in Unit VI. of the **SUPPLEMENTARY INFORMATION.** EPA has established a docket for this action under Docket identification (ID) number OPP–2005–0142. All documents in the docket are listed in the EDOCKET index at *http://www.epa.gov/edocket.* Although listed in the index, some information is not publicly available, i.e., CBI or other information whose disclosure is restricted by statute. Certain other material, such as copyrighted material, is not placed on the Internet and will be publicly available only in hard copy form. Publicly available docket materials are available either electronically in EDOCKET or in hard copy at the Public Information and Records Integrity Branch (PIRIB), Rm. 119, Crystal Mall #2, 1801 S. Bell St., Arlington, VA. This docket facility is open from 8:30 a.m. to 4 p.m., Monday through Friday, excluding legal holidays. The docket telephone number is (703) 305–5805.

FOR FURTHER INFORMATION CONTACT: Dani Daniel, Registration Division (7505C), Office of Pesticide Programs, Environmental Protection Agency, 1200 Pennsylvania Ave., NW., Washington, DC 20460–0001; telephone number: 703 305-5409; e-mail address:*daniel.dani@epa.gov*.

SUPPLEMENTARY INFORMATION:

I. General Information

A. Does this Action Apply to Me?

You may be potentially affected by this action if you are an agricultural producer, food manufacturer, or pesticide manufacturer. Potentially affected entities may include, but are not limited to:

- Crop production (NAICS 111), e.g., agricultural workers; greenhouse, nursery, and floriculture workers; farmers.
- Animal production (NAICS 112), e.g., cattle ranchers and farmers, dairy cattle farmers, livestock farmers.
- Food manufacturing (NAICS 311), e.g., agricultural workers; farmers; greenhouse, nursery, and floriculture workers; ranchers; pesticide applicators.
- Pesticide manufacturing (NAICS 32532), e.g., agricultural workers; commercial applicators; farmers; greenhouse, nursery, and floriculture workers; residential users.

This listing is not intended to be exhaustive, but rather provides a guide for readers regarding entities likely to be affected by this action. Other types of entities not listed in this unit could also be affected. The North American Industrial Classification System (NAICS) codes have been provided to assist you and others in determining whether this action might apply to certain entities. If you have any questions regarding the applicability of this action to a particular entity, consult the person listed under **FOR FURTHER INFORMATION CONTACT**.

B. How Can I Access Electronic Copies of this Document and Other Related Information?

In addition to using EDOCKET *(http://www.epa.gov/edocket/)*, you may access this **Federal Register** document electronically through the EPA Internet under the ''**Federal Register**'' listings at *http://www.epa.gov/fedrgstr/*. A frequently updated electronic version of 40 CFR part 180 is available at E-CFR Beta Site Two at *http://www.gpoaccess.gov/ecfr/*.

II. Background and Statutory Findings

In the **Federal Register** of June 13, 2004 (68 FR 35303) (FRL–7310–8), EPA issued a notice pursuant to section 408(d)(3) of FFDCA, 21 U.S.C. 346a(d)(3), announcing the filing of a pesticide petition (PP 4F6825) by Gustafson LLC, 1400 Preston Road, Suite 400, Plano, Texas 75093. The petition requested that 40 CFR 180.472 be amended by establishing tolerances for residues of the insecticide imidacloprid, 1-[(6-chloro-3-pyridinyl)methyl]-*N*-nitro-2-imidazolidinimine, in or on soybean, seed at 1.0 parts per million (ppm), and soybean, meal at 2.5 ppm. The proposed tolerance for soybean, meal was subsequently revised by the petitioner to a proposed tolerance of 4.0 ppm. That notice included a summary of the petition prepared by Gustafson LLC, the registrant. There were no comments received in response to the notice of filing.

EPA is also deleting an established tolerance in § 180.472 that is no longer needed as a result of this action. The tolerance deletion under § 180.472(b) is a time-limited tolerance established under section 18 emergency exemptions that is superceded by the establishment of general tolerances for imidacloprid § 180.472(a).

The changes to § 180.472 are as follows:

1. The time-limited tolerance for soybean, seed at 1.0 ppm is removed from § 180.472(b).

2. Tolerances for soybean, seed at 1.0 ppm and soybean, meal at 4.0 ppm are added to § 180.472(a).

Section 408(b)(2)(A)(i) of FFDCA allows EPA to establish a tolerance (the legal limit for a pesticide chemical residue in or on a food) only if EPA determines that the tolerance is ''safe.'' Section 408(b)(2)(A)(ii) of FFDCA defines ''safe'' to mean that ''there is a reasonable certainty that no harm will result from aggregate exposure to the pesticide chemical residue, including all anticipated dietary exposures and all other exposures for which there is reliable information.'' This includes exposure through drinking water and in residential settings, but does not include occupational exposure. Section 408(b)(2)(C) of FFDCA requires EPA to give special consideration to exposure of infants and children to the pesticide chemical residue in establishing a tolerance and to ''ensure that there is a reasonable certainty that no harm will result to infants and children from aggregate exposure to the pesticide chemical residue....''

EPA performs a number of analyses to determine the risks from aggregate exposure to pesticide residues. For further discussion of the regulatory requirements of section 408 of FFDCA and a complete description of the risk assessment process, see the final rule on Bifenthrin Pesticide Tolerances (62 FR 62961, November 26, 1997) (FRL–5754–7).

III. Aggregate Risk Assessment and Determination of Safety

Consistent with section 408(b)(2)(D) of FFDCA, EPA has reviewed the available scientific data and other relevant information in support of this action. EPA has sufficient data to assess the hazards of and to make a determination on aggregate exposure, consistent with section 408(b)(2) of FFDCA, for a tolerance for residues of imidacloprid on soybean, seed at 1.0 ppm and soybean, meal at 4.0 ppm.

On June 13, 2003 the Agency issued a Final rule (68 FR 35303, FRL–7310–8) establishing tolerances for residues of imidacloprid in or on acerola; artichoke, globe; avocado; banana (import); canistel; corn, pop, grain; corn, pop, stover; cranberry; currant; elderberry; feijoa; fruit, stone, group 12; gooseberry; huckleberry; guava; jaboticaba; juneberry; lingonberry; longan; lychee; mango; mustard, seed; okra; papaya; passionfruit; persimmon; pulasan; rambutan; salal; sapodilla; sapote, black; sapote, mamey; Spanish lime; star apple; starfruit; strawberry; vegetable, leaves of root and tuber, group 2; vegetable, legume, group 6, except soybean; vegetable, root and tuber, group 1, except sugar beet; watercress; wax jambu. When the Agency conducted the risk assessments in support of this tolerance action it assumed that imidacloprid residues would be present on soybean, seed and soybean, meal as well as on all foods covered by the proposed and established tolerances. Residues on soybean, seeds and soybean, meal were included because there was a pending application under the Federal Insecticide, Fungicide, and Rodenticide Act, 7 U.S.C. 136 et seq., to register imidacloprid on soybean, seed and soybean, meal. Therefore, establishing the soybean, seed and soybean, meal tolerances will not change the most recent estimated aggregate risks resulting from use of imidacloprid, as discussed in the June 13, 2003 issue of the **Federal Register**. Refer to the June 13, 2003 **Federal Register** document for a detailed discussion of the aggregate risk assessments and determination of safety. EPA relies upon those risk assessments and the findings made in the **Federal Register** document in support of this action.

Based on the risk assessments discussed in the final rule issued in the **Federal Register** of June 13, 2003 (68 FR 35303) (FRL–7310–8), EPA concludes that there is a reasonable certainty that no harm will result to the general population, and to infants and children from aggregate exposure to imidacloprid residues.

IV. Other Considerations

A. Analytical Enforcement Methodology

Adequate enforcement methods are available for determination of imidacloprid residues of concern in plant (Bayer Gas Chromatography/Mass Spectrometry (GC/MS) Method 00200) and livestock commodities (Bayer GC/MS Method 00191). These methods have undergone successful EPA petition method validations (PMVs), and the registrant has fulfilled the remaining requirements for additional raw data, method validation, independent laboratory validation (ILV), and an acceptable confirmatory method (high performance liquid chromatography/ultraviolet (HPLC/UV) Method 00357).

The methods may be requested from: Chief, Analytical Chemistry Branch, Environmental Science Center, 701 Mapes Rd., Ft. Meade, MD 20755–5350; telephone number: (410) 305–2905; e-mail address: residuemethods@epa.gov.

B. International Residue Limits

There are no established Codex maximum residue limits (MRLs) for

imidacloprid in or on the commodities in the subject petition.

V. Conclusion

Therefore, the tolerance is established for residues of imidacloprid, 1-[(6-chloro-3-pyridinyl)methyl]-*N*-nitro-2-imidazolidinimine, in or on soybean, seed at 1.0 ppm and soybean, meal at 4.0 ppm.

VI. Objections and Hearing Requests

Under section 408(g) of FFDCA, as amended by FQPA, any person may file an objection to any aspect of this regulation and may also request a hearing on those objections. The EPA procedural regulations which govern the submission of objections and requests for hearings appear in 40 CFR part 178. Although the procedures in those regulations require some modification to reflect the amendments made to FFDCA by FQPA, EPA will continue to use those procedures, with appropriate adjustments, until the necessary modifications can be made. The new section 408(g) of FFDCA provides essentially the same process for persons to''object'' to a regulation for an exemption from the requirement of a tolerance issued by EPA under new section 408(d) of FFDCA, as was provided in the old sections 408 and 409 of FFDCA. However, the period for filing objections is now 60 days, rather than 30 days.

A. What Do I Need to Do to File an Objection or Request a Hearing?

You must file your objection or request a hearing on this regulation in accordance with the instructions provided in this unit and in 40 CFR part 178. To ensure proper receipt by EPA, you must identify docket ID number OPP–2005–0142 in the subject line on the first page of your submission. All requests must be in writing, and must be mailed or delivered to the Hearing Clerk on or before September 12, 2005.

1. *Filing the request*. Your objection must specify the specific provisions in the regulation that you object to, and the grounds for the objections (40 CFR 178.25). If a hearing is requested, the objections must include a statement of the factual issues(s) on which a hearing is requested, the requestor's contentions on such issues, and a summary of any evidence relied upon by the objector (40 CFR 178.27). Information submitted in connection with an objection or hearing request may be claimed confidential by marking any part or all of that information as CBI. Information so marked will not be disclosed except in accordance with procedures set forth in 40 CFR part 2. A copy of the information that does not contain CBI must be submitted for inclusion in the public record. Information not marked confidential may be disclosed publicly by EPA without prior notice.

Mail your written request to: Office of the Hearing Clerk (1900L), Environmental Protection Agency, 1200 Pennsylvania Ave., NW., Washington, DC 20460–0001. You may also deliver your request to the Office of the Hearing Clerk in Suite 350, 1099 14th St., NW., Washington, DC 20005. The Office of the Hearing Clerk is open from 8 a.m. to 4 p.m., Monday through Friday, excluding legal holidays. The telephone number for the Office of the Hearing Clerk is (202) 564–6255.

2. *Copies for the Docket*. In addition to filing an objection or hearing request with the Hearing Clerk as described in Unit VI.A., you should also send a copy of your request to the PIRIB for its inclusion in the official record that is described in **ADDRESSES**. Mail your copies, identified by docket ID number OPP–2005–0142, to: Public Information and Records Integrity Branch, Information Resources and Services Division (7502C), Office of Pesticide Programs, Environmental Protection Agency, 1200 Pennsylvania Ave., NW., Washington, DC 20460–0001. In person or by courier, bring a copy to the location of the PIRIB described in **ADDRESSES**. You may also send an electronic copy of your request via e-mail to:*opp-docket@epa.gov*. Please use an ASCII file format and avoid the use of special characters and any form of encryption. Copies of electronic objections and hearing requests will also be accepted on disks in WordPerfect 6.1/8.0 or ASCII file format. Do not include any CBI in your electronic copy. You may also submit an electronic copy of your request at many Federal Depository Libraries.

B. When Will the Agency Grant a Request for a Hearing?

A request for a hearing will be granted if the Administrator determines that the material submitted shows the following: There is a genuine and substantial issue of fact; there is a reasonable possibility that available evidence identified by the requestor would, if established resolve one or more of such issues in favor of the requestor, taking into account uncontested claims or facts to the contrary; and resolution of the factual issues(s) in the manner sought by the requestor would be adequate to justify the action requested (40 CFR 178.32).

VII. Statutory and Executive Order Reviews

This final rule establishes a tolerance under section 408(d) of FFDCA in response to a petition submitted to the Agency. The Office of Management and Budget (OMB) has exempted these types of actions from review under Executive Order 12866, entitled *Regulatory Planning and Review* (58 FR 51735, October 4, 1993). Because this rule has been exempted from review under Executive Order 12866 due to its lack of significance, this rule is not subject to Executive Order 13211, *Actions Concerning Regulations That Significantly Affect Energy Supply, Distribution, or Use* (66 FR 28355, May 22, 2001). This final rule does not contain any information collections subject to OMB approval under the Paperwork Reduction Act (PRA), 44 U.S.C. 3501 *et seq.*, or impose any enforceable duty or contain any unfunded mandate as described under Title II of the Unfunded Mandates Reform Act of 1995 (UMRA) (Public Law 104–4). Nor does it require any special considerations under Executive Order 12898, entitled *Federal Actions to Address Environmental Justice in Minority Populations and Low-Income Populations* (59 FR 7629, February 16, 1994); or OMB review or any Agency action under Executive Order 13045, entitled *Protection of Children from Environmental Health Risks and Safety Risks* (62 FR 19885, April 23, 1997). This action does not involve any technical standards that would require Agency consideration of voluntary consensus standards pursuant to section 12(d) of the National Technology Transfer and Advancement Act of 1995 (NTTAA), Public Law 104–113, section 12(d) (15 U.S.C. 272 note). Since tolerances and exemptions that are established on the basis of a petition under section 408(d) of FFDCA, such as the tolerance in this final rule, do not require the issuance of a proposed rule, the requirements of the Regulatory Flexibility Act (RFA) (5 U.S.C. 601 *et seq.*) do not apply. In addition, the Agency has determined that this action will not have a substantial direct effect on States, on the relationship between the national government and the States, or on the distribution of power and responsibilities among the various levels of government, as specified in Executive Order 13132, entitled *Federalism*(64 FR 43255, August 10, 1999). Executive Order 13132 requires EPA to develop an accountable process to ensure ''meaningful and timely input by State and local officials in the development of regulatory policies that

have federalism implications.'' ''Policies that have federalism implications'' is defined in the Executive order to include regulations that have ''substantial direct effects on the States, on the relationship between the national government and the States, or on the distribution of power and responsibilities among the various levels of government.'' This final rule directly regulates growers, food processors, food handlers and food retailers, not States. This action does not alter the relationships or distribution of power and responsibilities established by Congress in the preemption provisions of section 408(n)(4) of FFDCA. For these same reasons, the Agency has determined that this rule does not have any ''tribal implications'' as described in Executive Order 13175, entitled *Consultation and Coordination with Indian Tribal Governments* (65 FR 67249, November 6, 2000). Executive Order 13175, requires EPA to develop an accountable process to ensure ''meaningful and timely input by tribal officials in the development of regulatory policies that have tribal implications.'' ''Policies that have tribal implications'' is defined in the Executive order to include regulations that have ''substantial direct effects on one or more Indian tribes, on the relationship between the Federal Government and the Indian tribes, or on the distribution of power and responsibilities between the Federal Government and Indian tribes.'' This rule will not have substantial direct effects on tribal governments, on the relationship between the Federal Government and Indian tribes, or on the distribution of power and responsibilities between the Federal Government and Indian tribes, as specified in Executive Order 13175. Thus, Executive Order 13175 does not apply to this rule.

VIII. Congressional Review Act

The Congressional Review Act, 5 U.S.C. 801 *et seq.*, as added by the Small Business Regulatory Enforcement Fairness Act of 1996, generally provides that before a rule may take effect, the agency promulgating the rule must submit a rule report, which includes a copy of the rule, to each House of the Congress and to the Comptroller General of the United States. EPA will submit a report containing this rule and other required information to the U.S. Senate, the U.S. House of Representatives, and the Comptroller General of the United States prior to publication of this final rule in the **Federal Register**. This final rule is not a ''major rule'' as defined by 5 U.S.C. 804(2).

List of Subjects in 40 CFR Part 180

Environmental protection, Administrative practice and procedure, Agricultural commodities, Pesticides and pests, Reporting and recordkeeping requirements.

Dated: June 23, 2005.

Lois Rossi,

Director, Registration Division, Office of Pesticide Programs.

■ Therefore, 40 CFR chapter I is amended as follows:

PART 180—[AMENDED]

■ 1. The authority citation for part 180 continues to read as follows:

Authority: 21 U.S.C. 321(q), 346a and 371.

■ 2. Section 180.472 is amended by adding alphabetically ''soybean, meal'' and ''soybean, seed'' to the table in paragraph (a), and by removing the entry for ''soybean, seed'' from the table in paragraph (b):

§ 180.472 Imidacloprid; tolerances for residues.

(a) * * *

Commodity	Parts per million	Expiration/ revocation date
* *	* *	*
Soybean, meal ..	4.0	None
Soybean, seed ..	1.0	None
* *	* *	*

* * * * *

[FR Doc. 05–13370 Filed 7–12–05; 8:45 am]

BILLING CODE 6560–50–S

ENVIRONMENTAL PROTECTION AGENCY

40 CFR Part 180

[OPP–2004–0322; FRL–7714–4]

Potassium Triiodide; Pesticide Chemical Not Requiring a Tolerance or an Exemption from Tolerance

AGENCY: Environmental Protection Agency (EPA).

ACTION: Final rule.

SUMMARY: EPA is designating the use of the active ingredient, potassium triiodide as a non-food use pesticide when applied to melons, grapes and bananas grown in foreign countries, and is adding an entry to 40 CFR 180.2020 noting the non-food use determination. This determination is based on the Agency's evaluation of data which indicates that dietary exposure to iodide and/or iodine resulting from the application of potassium triiodide to melons, grapes, and bananas is expected, to the extent any is present, to be indistinguishable from the background levels of existing dietary exposure resulting from the naturally-occurring sources of iodine chemicals. The effect of this designation is that EPA does not require that a tolerance or exemption from tolerance under section 408 of the Federal Food, Drug, and Cosmetic Act, 21 U.S.C. 346a, be established as a condition of registration of the pesticide under the Federal Insecticide, Fungicide, and Rodenticide Act, 7 U.S.C. 136 *et. seq.*

DATES: This regulation is effective July 13, 2005. Objections and requests for hearings must be received on or before September 12, 2005.

ADDRESSES: To submit a written objection or hearing request follow the detailed instructions as provided in Unit III. of the **SUPPLEMENTARY INFORMATION.** EPA has established a docket for this action under Docket identification (ID) number OPP–2004–0322. All documents in the docket are listed in the EDOCKET index at *http://www.epa.gov/edocket.* Although listed in the index, some information is not publicly available, i.e., CBI or other information whose disclosure is restricted by statute. Certain other material, such as copyrighted material, is not placed on the Internet and will be publicly available only in hard copy form. Publicly available docket materials are available either electronically in EDOCKET or in hard copy at the Public Information and Records Integrity Branch (PIRIB), Rm. 119, Crystal Mall #2, 1801 S. Bell St., Arlington, VA. This docket facility is open from 8:30 a.m. to 4 p.m., Monday through Friday, excluding legal holidays. The docket telephone number is (703) 305–5805.

FOR FURTHER INFORMATION CONTACT: Mary L. Waller, Registration Division (7505C), Office of Pesticide Programs, Environmental Protection Agency, 1200 Pennsylvania Ave., NW., Washington, DC 20460–0001; telephone number: (703) 308–9354; e-mail address: *waller.mary@epa.gov.*

SUPPLEMENTARY INFORMATION:

I. General Information

A. Does this Action Apply to Me?

You may be potentially affected by this action if you are an agricultural producer, food manufacturer, or pesticide manufacturer. Potentially affected entities may include, but are not limited to:

- Crop production (NAICS code 111)

- Animal production (NAICS code 112)
- Food manufacturing (NAICS code 311)
- Pesticide manufacturing (NAICS code 32532)

This listing is not intended to be exhaustive, but rather provides a guide for readers regarding entities likely to be affected by this action. Other types of entities not listed in this unit could also be affected. The North American Industrial Classification System (NAICS) codes have been provided to assist you and others in determining whether this action might apply to certain entities. If you have any questions regarding the applicability of this action to a particular entity, consult the person listed under **FOR FURTHER INFORMATION CONTACT**.

B. How Can I Access Electronic Copies of this Document and Other Related Information?

In addition to using EDOCKET (*http://www.epa.gov/edocket/*), you may access this **Federal Register** document electronically through the EPA Internet under the ''**Federal Register**'' listings at *http://www.epa.gov/fedrgstr/*. A frequently updated electronic version of 40 CFR part 180 is available at E-CFR Beta Site Two at *http://www.gpoaccess.gov/ecfr/*.

C. Under What Authority is This Action Being Taken?

This final rule is issued pursuant to FFDCA sections 408(e) and 701(a). Section 408(e) of FFDCA authorizes EPA to establish, modify, or revoke tolerances and exemptions from the requirement of a tolerance for residues of pesticide chemicals in or on raw and processed foods and to establish general procedures and requirements for the implementation of section 408. FFDCA section 701 authorizes the establish of regulations for the efficient enforcement of the FFDCA.

II. Background

In the **Federal Register** of August 27, 2004 (69 FR 52679) (FRL–7676–7), EPA issued a notice pursuant to section 408(d)(3) of the FFDCA, 21 U.S.C. 346a(d)(3), announcing the filing of a pesticide tolerance petition (PP 3E6572) by Ajay North America, L.L.C., 1400 Industry Road, Powder Springs, GA 30127. The petition requested that 40 CFR part 180 be amended by establishing an exemption from the requirement of a tolerance for residues of the fungicide, iodine-potassium iodide, in or on imported bananas, grapes, and melons. This notice included a summary of the petition prepared by the petitioner Ajay North America. There were no comments received in response to the notice of filing.

The Agency reviewed and evaluated residue data on potassium triiodide and public literature on iodine and iodide salts submitted in support of the petition. The Agency determined that for potassium triiodide which is reactive in nature, the residue of concern is iodide ion (I-). Iodide is an ubiquitous, naturally-occurring component of all soils, plants, and animals, and as such, there is an existing background level of iodine and iodide in the environment which varies depending on the naturally-occurring sources of iodine chemicals in the region. Additionally, iodine is an essential human dietary nutrient which is required for the synthesis of thyroid hormones.

The Agency's review and evaluation of the residue data indicated that residues of iodide in fruit treated with potassium triiodide were indistinguishable from the background levels of existing iodide in untreated fruit, and therefore, no additional dietary exposure to iodide is expected. Based on this finding, the Agency decided that a non-food use determination was more appropriate than an exemption from the requirement of a tolerance as requested by the petitioner. Therefore, EPA is designating the use of potassium triiodide when applied to growing crops in foreign countries, as a non-food use, not requiring the issuance of a tolerance or an exemption from the requirement of a tolerance.

III. Objections and Hearing Requests

Under section 408(g) of the FFDCA, as amended by the FQPA, any person may file an objection to any aspect of this regulation and may also request a hearing on those objections. The EPA procedural regulations which govern the submission of objections and requests for hearings appear in 40 CFR part 178. Although the procedures in those regulations require some modification to reflect the amendments made to the FFDCA by the FQPA of 1996, EPA will continue to use those procedures, with appropriate adjustments, until the necessary modifications can be made. The new section 408(g) provides essentially the same process for persons to ''object'' to a regulation for an exemption from the requirement of a tolerance issued by EPA under new section 408(d), as was provided in the old FFDCA sections 408 and 409. However, the period for filing objections is now 60 days, rather than 30 days.

A. What Do I Need to Do to File an Objection or Request a Hearing?

You must file your objection or request a hearing on this regulation in accordance with the instructions provided in this unit and in 40 CFR part 178. To ensure proper receipt by EPA, you must identify docket ID number OPP–2004–0322 in the subject line on the first page of your submission. All requests must be in writing, and must be mailed or delivered to the Hearing Clerk on or before September 12, 2005.

1. *Filing the request*. Your objection must specify the specific provisions in the regulation that you object to, and the grounds for the objections (40 CFR 178.25). If a hearing is requested, the objections must include a statement of the factual issues(s) on which a hearing is requested, the requestor's contentions on such issues, and a summary of any evidence relied upon by the objector (40 CFR 178.27). Information submitted in connection with an objection or hearing request may be claimed confidential by marking any part or all of that information as CBI. Information so marked will not be disclosed except in accordance with procedures set forth in 40 CFR part 2. A copy of the information that does not contain CBI must be submitted for inclusion in the public record. Information not marked confidential may be disclosed publicly by EPA without prior notice.

Mail your written request to: Office of the Hearing Clerk (1900L), Environmental Protection Agency, 1200 Pennsylvania Ave., NW., Washington, DC 20460–0001. You may also deliver your request to the Office of the Hearing Clerk in Suite 350, 1099 14th St., NW., Washington, DC 20005. The Office of the Hearing Clerk is open from 8 a.m. to 4 p.m., Monday through Friday, excluding legal holidays. The telephone number for the Office of the Hearing Clerk is (202) 564–6255.

2. *Copies for the Docket*. In addition to filing an objection or hearing request with the Hearing Clerk as described in Unit III.A., you should also send a copy of your request to the PIRIB for its inclusion in the official record that is described in **ADDRESSES**. Mail your copies, identified by docket ID number OPP–2004–0322, to: Public Information and Records Integrity Branch, Information Resources and Services Division (7502C), Office of Pesticide Programs, Environmental Protection Agency, 1200 Pennsylvania Ave., NW., Washington, DC 20460. In person or by courier, bring a copy to the location of the PIRIB described in **ADDRESSES**. You may also send an electronic copy of your request via e-mail to: *opp-*

docket@epa.gov. Please use an ASCII file format and avoid the use of special characters and any form of encryption. Copies of electronic objections and hearing requests will also be accepted on disks in WordPerfect 6.1/8.0 or ASCII file format. Do not include any CBI in your electronic copy. You may also submit an electronic copy of your request at many Federal Depository Libraries.

B. When Will the Agency Grant a Request for a Hearing?

A request for a hearing will be granted if the Administrator determines that the material submitted shows the following: There is a genuine and substantial issue of fact; there is a reasonable possibility that available evidence identified by the requestor would, if established resolve one or more of such issues in favor of the requestor, taking into account uncontested claims or facts to the contrary; and resolution of the factual issues(s) in the manner sought by the requestor would be adequate to justify the action requested (40 CFR 178.32).

IV. Statutory and Executive Order Reviews

This final rule establishes a non-food determination under FFDCA section 408(e) in response to a petition submitted to the Agency. The Office of Management and Budget (OMB) has exempted these types of actions from review under Executive Order 12866, entitled *Regulatory Planning and Review* (58 FR 51735, October 4, 1993). Because this rule has been exempted from review under Executive Order 12866 due to its lack of significance, this rule is not subject to Executive Order 13211, *Actions Concerning Regulations That Significantly Affect Energy Supply, Distribution, or Use* (66 FR 28355, May 22, 2001). This final rule does not contain any information collections subject to OMB approval under the Paperwork Reduction Act (PRA), 44 U.S.C. 3501 *et seq.*, or impose any enforceable duty or contain any unfunded mandate as described under Title II of the Unfunded Mandates Reform Act of 1995 (UMRA) (Pub. L. 104–4). Nor does it require any special considerations under Executive Order 12898, entitled *Federal Actions to Address Environmental Justice in Minority Populations and Low-Income Populations* (59 FR 7629, February 16, 1994); or OMB review or any Agency action under Executive Order 13045, entitled *Protection of Children from Environmental Health Risks and Safety Risks* (62 FR 19885, April 23, 1997). This action does not involve any technical standards that would require Agency consideration of voluntary consensus standards pursuant to section 12(d) of the National Technology Transfer and Advancement Act of 1995 (NTTAA), Public Law 104–113, section 12(d) (15 U.S.C. 272 note). Since regulations that are established on the basis of a petition under FFDCA section 408(d), such as the regulation in this final rule, do not require the issuance of a proposed rule, the requirements of the Regulatory Flexibility Act (RFA) (5 U.S.C. 601 *et seq.*) do not apply. In addition, the Agency has determined that this action will not have a substantial direct effect on States, on the relationship between the national government and the States, or on the distribution of power and responsibilities among the various levels of government, as specified in Executive Order 13132, entitled *Federalism* (64 FR 43255, August 10, 1999). Executive Order 13132 requires EPA to develop an accountable process to ensure ''meaningful and timely input by State and local officials in the development of regulatory policies that have federalism implications.'' ''Policies that have federalism implications'' is defined in the Executive Order to include regulations that have ''substantial direct effects on the States, on the relationship between the national government and the States, or on the distribution of power and responsibilities among the various levels of government.'' This final rule directly regulates growers, food processors, food handlers and food retailers, not States. This action does not alter the relationships or distribution of power and responsibilities established by Congress in the preemption provisions of FFDCA section 408(n)(4). For these same reasons, the Agency has determined that this rule does not have any ''tribal implications'' as described in Executive Order 13175, entitled *Consultation and Coordination with Indian Tribal Governments* (65 FR 67249, November 6, 2000). Executive Order 13175, requires EPA to develop an accountable process to ensure ''meaningful and timely input by tribal officials in the development of regulatory policies that have tribal implications.'' ''Policies that have tribal implications'' is defined in the Executive Order to include regulations that have ''substantial direct effects on one or more Indian tribes, on the relationship between the Federal Government and the Indian tribes, or on the distribution of power and responsibilities between the Federal Government and Indian tribes.'' This rule will not have substantial direct effects on tribal governments, on the relationship between the Federal Government and Indian tribes, or on the distribution of power and responsibilities between the Federal Government and Indian tribes, as specified in Executive Order 13175. Thus, Executive Order 13175 does not apply to this rule.

V. Congressional Review Act

The Congressional Review Act, 5 U.S.C. 801 *et seq.*, as added by the Small Business Regulatory Enforcement Fairness Act of 1996, generally provides that before a rule may take effect, the agency promulgating the rule must submit a rule report, which includes a copy of the rule, to each House of the Congress and to the Comptroller General of the United States. EPA will submit a report containing this rule and other required information to the U.S. Senate, the U.S. House of Representatives, and the Comptroller General of the United States prior to publication of this final rule in the **Federal Register**. This final rule is not a ''major rule'' as defined by 5 U.S.C. 804(2).

List of Subjects in 40 CFR Part 180

Environmental protection, Administrative practice and procedure, Agricultural commodities, Pesticides and pests, Reporting and recordkeeping requirements.

Dated: June 28, 2005.

Lois Rossi,

Director, Registration Division, Office of Pesticide Programs.

■ Therefore, 40 CFR chapter I is amended as follows:

PART 180—[AMENDED]

■ 1. The authority citation for part 180 continues to read as follows:

Authority: 21 U.S.C. 321(q), 346a and 371.

■ 2. In § 180.2020, the table is amended by adding alphabetically the following chemical substance to read as follows:

§ 180.2020 Non-food determinations.

* * * * *

Pesticide chemical	CAS reg. No.	Limits	Uses
Potassium triiodide (KI_3)	12298–68–9	When applied to growing crops in foreign countries	Bananas, grapes, and melons
*	* *	* *	* *

* * * * *

[FR Doc. 05–13701 Filed 7–12–05; 8:45 am]

BILLING CODE 6560–50–S

ENVIRONMENTAL PROTECTION AGENCY

40 CFR Part 180

[OPP–2005–0075; FRL–7714–3]

Spirodiclofen; Pesticide Tolerance

AGENCY: Environmental Protection Agency (EPA).

ACTION: Final rule.

SUMMARY: This regulation establishes tolerances for residues of spirodiclofen (3-(2,4-dichlorophenyl)-2-oxo-1-oxaspiro[4.5]dec-3-en-4-yl 2,2-dimethylbutanoate) in or on grape; grape, raisin; grape, juice; fruit, citrus, crop group 10; citrus, oil; citrus, juice; fruit, pome, crop group 11; apple, wet pomace; fruit, stone, crop group 12; nut, tree, crop group 14; almond, hulls; and pistachio; and for residues of spirodiclofen and its free enol metabolite (3-(2,4-dichlorophenyl)-4-hydroxy-1-oxaspiro[4,5]dec-3-en-2-one) in or on cattle, fat; cattle, meat byproducts; cattle, meat; goat, fat; goat, meat byproducts; goat, meat; sheep, fat; sheep, meat byproducts; sheep, meat; horse, fat; horse, meat byproducts; horse, meat; milk; and milk, fat. Bayer CropScience requested these tolerances under the Federal Food, Drug, and Cosmetic Act (FFDCA), as amended by the Food Quality Protection Act of 1996 (FQPA).

DATES: This regulation is effective July 13, 2005. Objections and requests for hearings must be received on or before September 12, 2005.

ADDRESSES: To submit a written objection or hearing request follow the detailed instructions as provided in Unit VI. of the **SUPPLEMENTARY INFORMATION.** EPA has established a docket for this action under Docket identification (ID) number OPP–2005–0075. All documents in the docket are listed in the EDOCKET index at *http://www.epa.gov/edocket.* Although listed in the index, some information is not publicly available, i.e., CBI or other information whose disclosure is restricted by statute. Certain other material, such as copyrighted material, is not placed on the Internet and will be publicly available only in hard copy form. Publicly available docket materials are available either electronically in EDOCKET or in hard copy at the Public Information and Records Integrity Branch (PIRIB), Rm. 119, Crystal Mall#2, 1801 S. Bell St., Arlington, VA. This docket facility is open from 8:30 a.m. to 4 p.m., Monday through Friday, excluding legal holidays. The docket telephone number is (703) 305–5805.

FOR FURTHER INFORMATION CONTACT: Rita Kumar, Registration Division (7505C), Office of Pesticide Programs, Environmental Protection Agency, 1200 Pennsylvania Ave., NW., Washington, DC 20460–0001; telephone number: (703) 308–8291; e-mail address:*kumar.rita@epa.gov*.

SUPPLEMENTARY INFORMATION:

I. General Information

A. Does this Action Apply to Me?

You may be potentially affected by this action if you are an agricultural producer, food manufacturer, or pesticide manufacturer. Potentially affected entities may include, but are not limited to:

- Crop production (NAICS 111), e.g., agricultural workers; greenhouse, nursery, and floriculture workers; farmers.
- Animal production (NAICS 112), e.g., cattle ranchers and farmers, dairy cattle farmers, livestock farmers.
- Food manufacturing (NAICS 311), e.g., agricultural workers; farmers; greenhouse, nursery, and floriculture workers; ranchers; pesticide applicators.
- Pesticide manufacturing (NAICS 32532), e.g., agricultural workers; commercial applicators; farmers; greenhouse, nursery, and floriculture workers; residential users.

This listing is not intended to be exhaustive, but rather provides a guide for readers regarding entities likely to be affected by this action. Other types of entities not listed in this unit could also be affected. The North American Industrial Classification System (NAICS) codes have been provided to assist you and others in determining whether this action might apply to certain entities. If you have any questions regarding the applicability of this action to a particular entity, consult the person listed under **FOR FURTHER INFORMATION CONTACT.**

B. How Can I Access Electronic Copies of this Document and Other Related Information?

In addition to using EDOCKET *(http://www.epa.gov/edocket/)*, you may access this **Federal Register** document electronically through the EPA Internet under the ''**Federal Register**'' listings at *http://www.epa.gov/fedrgstr/*. A frequently updated electronic version of 40 CFR part 180 is available at E-CFR Beta Site Two at *http://www.gpoaccess.gov/ecfr/*. To access the OPPTS Harmonized Guidelines referenced in this document, go directly to the guidelines at *http://www.epa.gpo/opptsfrs/home/guidelin.htm/.*

II. Background and Statutory Findings

In the **Federal Register** of February 18, 2004 (69 FR 7632) (FRL–7343–2), EPA issued a notice pursuant to section 408(d)(3) of FFDCA, 21 U.S.C. 346a(d)(3), announcing the filing of a pesticide petition (PP 2F6469) by Bayer CropScience, 2 T.W. Alexander Drive, P.O. Box 12014, Research Triangle Park, NC 27709. The petition requested that 40 CFR part 180 be amended by establishing a tolerance for residues of the insecticide spirodiclofen (3-(2,4-dichlorophenyl)-2-oxo-1-oxaspiro[4,5]dec-3]-en-4-yl 2,2-dimethylbutanoate), in or on citrus fruit group at 0.3 parts per million (ppm), citrus pulp, dried, at 0.4 ppm, citrus oil at 20 ppm, pome fruit group at 0.8 ppm, pome fruit pomace, wet, at 6.0 ppm, stone fruit group at 1.0 ppm, tree nut group at 0.05 ppm, almond hulls at 20 ppm, pistachios at 0.05 ppm, grape at 2.0 ppm and grape, raisin at 4.0 ppm; and for combined residues of spirodiclofen (3-(2,4-dichlorophenyl)-2-oxo-1-oxaspiro[4,5]dec-3]-en-4-yl 2,2-dimethylbutanoate), and/or its enol metabolite, 3-(2,4-dichlorophenyl)-4-hydroxy-1-oxaspiro[4,5]dec-3-en-2-one, in or on cattle, fat, at 0.01 ppm and cattle, meat by-products, at 0.05 parts per million (ppm). That notice included a summary of the petition prepared by Bayer CropScience, the registrant. There were no comments received in response to the notice of filing.

Section 408(b)(2)(A)(i) of FFDCA allows EPA to establish a tolerance (the legal limit for a pesticide chemical residue in or on a food) only if EPA

determines that the tolerance is ''safe.'' Section 408(b)(2)(A)(ii) of FFDCA defines ''safe'' to mean that ''there is a reasonable certainty that no harm will result from aggregate exposure to the pesticide chemical residue, including all anticipated dietary exposures and all other exposures for which there is reliable information.'' This includes exposure through drinking water and in residential settings, but does not include occupational exposure. Section 408(b)(2)(C) of FFDCA requires EPA to give special consideration to exposure of infants and children to the pesticide chemical residue in establishing a tolerance and to ''ensure that there is a reasonable certainty that no harm will result to infants and children from aggregate exposure to the pesticide chemical residue. . . .''

EPA performs a number of analyses to determine the risks from aggregate exposure to pesticide residues. For further discussion of the regulatory requirements of section 408 of FFDCA and a complete description of the risk assessment process, see the final rule on Bifenthrin Pesticide Tolerances (62 FR 62961, November 26, 1997) (FRL–5754–7).

III. Aggregate Risk Assessment and Determination of Safety

Consistent with section 408(b)(2)(D) of FFDCA, EPA has reviewed the available scientific data and other relevant information in support of this action. EPA has sufficient data to assess the hazards of and to make a determination on aggregate exposure, consistent with section 408(b)(2) of FFDCA, for a tolerance for residues of spirodiclofen on grape at 2.0 ppm; grape, raisin at 4.0 ppm; grape, juice at 2.4 ppm; citrus, fruit, crop group 10 at 0.50 ppm; citrus, oil at 20 ppm; citrus, juice at 0.60 ppm; fruit, pome, crop group 11 at 0.80 ppm; apple, wet pomace at 2.0 ppm; fruit, stone, crop group 12 at 1.0 ppm; nut, tree, crop group 14 at 0.10 ppm; almond, hulls at 20 ppm; pistachio at 0.10 ppm; and for combined residues of spirodiclofen and its free enol metabolite BAJ 2510 in or on cattle, meat and cattle, fat at 0.02 ppm; cattle, meat byproducts at 0.10 ppm; goat, meat and goat, fat at 0.02 ppm; goat, meat byproducts at 0.10 ppm; sheep, meat and sheep, fat at 0.02 ppm; sheep, meat byproducts at 0.10 ppm; horse, meat and horse, fat at 0.02 ppm; horse, meat byproducts at 0.10 ppm; milk at 0.01 ppm, and milk, fat at 0.03 ppm. EPA's assessment of exposures and risks associated with establishing the tolerance follows.

A. Toxicological Profile

EPA has evaluated the available toxicity data and considered its validity, completeness, and reliability as well as the relationship of the results of the studies to human risk. EPA has also considered available information concerning the variability of the sensitivities of major identifiable subgroups of consumers, including infants and children.

Spirodiclofen has low acute toxicity via oral, dermal, or inhalation route. It is not an eye or dermal irritant. However, it is a potential skin sensitizer. The nature of the toxic effects caused by spirodiclofen are discussed in Table 1 of this unit as well as the no observed adverse effect level (NOAEL) and the lowest observed adverse effect level (LOAEL) from the toxicity studies reviewed.

TABLE 1.—SUBCHRONIC, CHRONIC, AND OTHER TOXICITY PROFILE FOR SPIRODICLOFEN

Guideline No.	Study Type	Results
870.3100	Subchronic oral - rat	For males, NOAEL = 32.1 milligram/kilogram/day (mg/kg/day), LOAEL = 166.9 mg/kg/day based on increased incidence and severity of small cytoplasmic vacuolation in the cortex of adrenal glands, decreased cholesterol (week 5 and 13), and decreased triglycerides (week 5), For females, NOAEL = 8.1 mg/kg/day, LOAEL = 47.1 mg/kg/day based on increased incidence of small cytoplasmic vacuolation in the cortex of adrenal glands
870.3100	Subchronic oral - mouse	For males, NOAEL = 15 mg/kg/day, LOAEL= 164 mg/kg/day based on an increased incidence of hypertrophic Leydig cells in the testes For females, NOAEL = 30 mg/kg/day, LOAEL = 234 mg/kg/day based on an increased incidence of cytoplasmic vacuolation of the adrenal cortex
870.3150	Subchronic oral - dog	For males, NOAEL = 7.7 mg/kg/day, LOAEL = 26.6 mg/kg/day based on decreased body weight gains, increased liver and adrenal weights, decreased prostate weights, and histopathology findings in the adrenal glands, testes, epididymis, thymus, and prostates For females, NOAEL ≤8.4 mg/kg/day. LOAEL = 8.4 mg/kg/day based on increased adrenal gland weight (two out of four animals) which coincided with histopathology findings (cytoplasmic vacuoles in the Zona fasciculata of the adrenal glands)

TABLE 1.—SUBCHRONIC, CHRONIC, AND OTHER TOXICITY PROFILE FOR SPIRODICLOFEN—Continued

Guideline No.	Study Type	Results
870.3200	21–Day dermal toxicity - rat	NOAEL is 1,000 mg/kg/day (highest dose tested (HDT)); however, the histopathology was not appropriately conducted as required by the guideline. The study did not examine all of the tissues, especially the possible target organs (i.e., uterus, prostate, etc)
870.3700	Prenatal developmental - rat	Maternal: NOAEL = 1,000 mg/kg/day (HDT) Developmental: NOAEL = 300 mg/kg/day, LOAEL = 1,000 mg/kg/day based on an increased incidence of slight dilatation of the renal pelvis
870.3700	Prenatal developmental - rabbit	Maternal: NOAEL = 100 mg/kg/day, LOAEL = 300 mg/kg/day based on body weight loss and decreased food consumption Developmental: NOAEL = 1,000 mg/kg/day (HDT)
870.3800	Reproduction and fertility effects - rat	Parental/system: For males: NOAEL = 5.2-6.4 mg/kg/day, LOAEL = 26.2- 30.2 mg/kg/day based on decreased body weight in F males; decreased absolute and relative liver weight in F_0 males; decreased cholesterol and triglycerides in F1 males; and increased severity of adrenal cortical vacuolation in F_1 males. For females, NOAEL = 5.5-7.0 mg/kg/day, LOAEL = 27.6-34.4 mg/kg/day based on decreased unesterified fatty acids in F_1 females, and increased severity of adrenal cortical vacuolation in F_0 and F_1 females Reproductive: For males: NOAEL = 26.2-30.2 mg/kg/day, LOAEL = 134.8- 177.6 mg/kg/day based on delayed sexual maturation; decreased testicular spermatid and epididymal sperm counts (oligospermia); and atrophy of the testes, epididymides, prostate and seminal vesicles. For females: NOAEL = 27.6-34.4 mg/kg/day, LOAEL = 139.2-192.7 mg/kg/day based on increased severity of ovarian luteal cell vacuolation/degeneration Offspring: NOAEL = 5.2-6.4 (M)/5.5-7.0 (F) mg/kg/day, LOAEL = 26.2-30.2 (M)/ 27.6-34.4(F) mg/kg/day based on decreased body weight and weight gain in F_1 male and female pups
870.4100	Chronic toxicity - dog	NOAEL = 1.38 (M)/1.52(F) mg/kg/day, LOAEL = 4.33(M)/4.74 (F) mg/kg/day based on increased relative adrenal weights in both sexes, increased relative testis weight in males and histopathology findings in the adrenal gland of both sexes

TABLE 1.—SUBCHRONIC, CHRONIC, AND OTHER TOXICITY PROFILE FOR SPIRODICLOFEN—Continued

Guideline No.	Study Type	Results
870.4200	Carcinogenicity - mouse	NOAEL = 4.1(M)/5.1(F) mg/kg/day, LOAEL = 610 (M) mg/kg/day based on increased absolute and relative liver and adrenal weights, decreased absolute and relative kidney weight, enlarged adrenal gland, discolored testis, adrenal gland vacuolization, interstitial cell degeneration of the testes. For females, LOAEL = 722 mg/kg/day based on increased absolute and relative adrenal weight, decreased absolute and relative kidney weight, increased incidences of adrenal gland pigmentation, and adrenal vacuolization. Hepatocellular adenoma and carcinoma
870.4300	Chronic toxicity - rat	For males: NOAEL = 14.7 mg/kg/day, LOAEL = 110.1 mg/kg/day based on decreased body weights, decreased body weight gain, increased APh levels, decreased cholesterol and triglyceride levels, increased vacuolated jejunum enterocytes, and increased incidences of Leydig cell hyperplasia For females: NOAEL = 19.9 mg/kg/day, LOAEL = 152.9 mg/kg/day based on decreased body weights, decreased body weight gain, increased APh levels, increased TSH, uterus nodules, and increased vacuolated jejunum enterocytes testes Leydig cell adenoma in males, uterine adenoma and/or adenocarcinoma in females
870.5100	Gene mutation - Salmonella typhimurium	There was no evidence of increased revertant colonies above control in 5 Salmonella strains (TA1535, TA1537, TA1538, TA100, TA98) ± S9 at concentrations up to 5,000 μg/plate
870.5300	*In vitro* mammalian gell gene mutation	Negative, tested in Chinese Hamster lung fibroblast V79 cells at concentrations up to 300 μg/mL - S9 and +S9. Cytotoxicity was observed at ≥15 μg/mL -S9 and 80 μg/mL +S9
870.5375	*In vitro* mammalian chromosome aberration	Negative, tested in Chinese hamster lung (V79) cells at concentrations 5-80 μg/mL or 0.75-12 μg/mL -S9 or 10-160 μg/mL +S9
870.5395	*In vivo* mouse bone morrow micronucleus	Negative, tested at a dose 800 mg/kg (MTD). Clinical signs and cytotoxicity were seen at 800 mg/kg
870.6200	Acute neurotoxicity - rat	NOAEL = 2,000 mg/kg/day, no neurotoxicity observed
870.6200	Subchronic neurotoxicity - rat	NOAEL = 70.3(M)/87.3(F) mg/kg/day. LOAEL = 1088.8(M)/1306.5(F) mg/kg/day based on decreased body weights, food consumption, and increased urine staining in both sexes and decreased motor and locomotor activity (week 4) in females only

TABLE 1.—SUBCHRONIC, CHRONIC, AND OTHER TOXICITY PROFILE FOR SPIRODICLOFEN—Continued

Guideline No.	Study Type	Results
870.6300	Developmental neurotoxicity	Maternal NOAEL = 135.9/273.8 mg/kg/day LOAEL = Not established Offspring NOAEL = Not established LOAEL = 6.5/14.0 mg/kg/day based on effects in memory phase of the water maze test in PND 60 females The study classification is reserved for the guideline requirement pending receipt of additional morphometric measurements for the low and mid dose groups

B. Toxicological Endpoints

The dose at which no adverse effects are observed (the NOAEL) from the toxicology study identified as appropriate for use in risk assessment is used to estimate the toxicological level of concern (LOC). However, the lowest dose at which adverse effects of concern are identified (the LOAEL) is sometimes used for risk assessment if no NOAEL was achieved in the toxicology study selected. An uncertainty factor (UF) is applied to reflect uncertainties inherent in the extrapolation from laboratory animal data to humans and in the variations in sensitivity among members of the human population as well as other unknowns. An UF of 100 is routinely used, 10X to account for interspecies differences and 10X for intraspecies differences.

Three other types of safety or uncertainty factors may be used: ''Traditional uncertainty factors;'' the ''special FQPA safety factor;'' and the ''default FQPA safety factor.'' By the term ''traditional uncertainty factor,'' EPA is referring to those additional uncertainty factors used prior to FQPA passage to account for database deficiencies. These traditional uncertainty factors have been incorporated by the FQPA into the additional safety factor for the protection of infants and children. The term ''special FQPA safety factor'' refers to those safety factors that are deemed necessary for the protection of infants and children primarily as a result of the FQPA. The ''default FQPA safety factor'' is the additional 10X safety factor that is mandated by the statute unless it is decided that there are reliable data to choose a different additional factor (potentially a traditional uncertainty factor or a special FQPA safety factor).

For dietary risk assessment (other than cancer) the Agency uses the UF to calculate an acute or chronic reference dose (acute RfD or chronic RfD) where the RfD is equal to the NOAEL divided by an UF of 100 to account for interspecies and intraspecies differences and any traditional uncertainty factors deemed appropriate (RfD = NOAEL/UF). Where a special FQPA safety factor or the default FQPA safety factor is used, this additional factor is applied to the RfD by dividing the RfD by such additional factor. The acute or chronic Population Adjusted Dose (aPAD or cPAD) is a modification of the RfD to accommodate this type of safety factor.

For non-dietary risk assessments (other than cancer) the UF is used to determine the LOC. For example, when 100 is the appropriate UF (10X to account for interspecies differences and 10X for intraspecies differences) the LOC is 100. To estimate risk, a ratio of the NOAEL to exposures (margin of exposure (MOE) = NOAEL/exposure) is calculated and compared to the LOC.

The linear default risk methodology (Q*) is the primary method currently used by the Agency to quantify carcinogenic risk. The Q* approach assumes that any amount of exposure will lead to some degree of cancer risk. A Q* is calculated and used to estimate risk which represents a probability of occurrence of additional cancer cases (e.g., risk). An example of how such a probability risk is expressed would be to describe the risk as one in one hundred thousand (1×10^{-5}), one in a million (1×10^{-6}), or one in ten million (1×10^{-7}). Under certain specific circumstances, MOE calculations will be used for the carcinogenic risk assessment. In this non-linear approach, a ''point of departure'' is identified below which carcinogenic effects are not expected. The point of departure is typically a NOAEL based on an endpoint related to cancer effects though it may be a different value derived from the dose response curve. To estimate risk, a ratio of the point of departure to exposure (MOE_{cancer} = point of departure/exposures) is calculated.

A summary of the toxicological endpoints for spirodiclofen used for human risk assessment is shown in Table 2 of this unit:

TABLE 2.—SUMMARY OF TOXICOLOGICAL DOSE AND ENDPOINTS FOR SPIRODICLOFEN FOR USE IN HUMAN RISK ASSESSMENT

Exposure Scenario	Dose Used in Risk Assessment, UF	Special FQPA SF* and Level of Concern for Risk Assessment	Study and Toxicological Effects
Acute Dietary	Acute RfD = Not established	An effect of concern attributable to a single dose was not identified	
Chronic dietary (all populations)	LOAEL = 6.5 mg/kg/day UF = 1,000 Chronic RfD = 0.0065 mg/kg/day	FQPA SF = 1X cPAD = Chronic RfD/FQPA SF = 0.0065 mg/kg/day	Developmental Neurotoxicity Study - Rat LOAEL of 6.5 mg/kg/day based on decreased retention (memory) in females on day 60 in the water maze at all doses
Cancer (Oral, dermal, inhalation)	Classification: ''Likely to be Carcinogenic to Humans'' with Q1* $(mg/kg/day)^{-1} = 1.49 \times 10^{-2}$		

C. Exposure Assessment

1. *Dietary exposure from food and feed uses*. Tolerances have not been established for (40 CFR 180.000) for the residues of spirodiclofen, in or on a variety of raw agricultural commodities. Risk assessments were conducted by EPA to assess dietary exposures from spirodiclofen in food as follows:

i. *Acute exposure*. Acute quantitative dietary risk assessments are performed for a food-use pesticide, if a toxicological study has indicated the possibility of an effect of concern occurring as a result of a 1–day or single exposure. No appropriate single-dose endpoint was available for the acute oral exposure of the general population, including infants and children. Therefore, an acute quantitative dietary assessment was not performed.

ii. *Chronic exposure*. In conducting the chronic and cancer dietary risk assessment EPA used the Lifeline (version 2.0) and Dietary Exposure Evaluation Model software with the Food Commodity Intake Database (DEEM-FCID™), both of which incorporates food consumption data as reported by respondents in the USDA 1994–1996 and 1998 Nationwide Continuing Surveys of Food Intake by Individuals (CSFII), and accumulated exposure to the chemical for each commodity. The following assumptions were made for the chronic exposure assessments: The chronic and cancer analyses were refined through the use of average field trial residues, experimentally determined processing factors, and projected average percent crop treated estimates. These averages were based on the typical average of all insecticides used to control all pests on the specific crop.

The projected average percent crop treated estimates were provided for apple, peach, grape, orange, and grapefruit. These averages were based on the typical average of all insecticides used to control all pests on the specific crop. The Agency determined that it is appropriate to translate the projected percent crop treated estimates for peach, apple, and grapefruit to the remaining crops in the stone fruit, pome fruit, and citrus crop groups, respectively.

Since the analysis made use of average residues derived from crop field trial studies (maximum application rate and minimum preharvest interval (PHI)), incorporated maximum theoretical processing factors for juice, and surface drinking water estimates which assumed 87% of the basin cropped and 100% of the cropped area treated at the maximum rate (citrus, pecan, apple, peach, and grape), the Agency concluded that the exposure estimates are unlikely to underestimate actual exposure.

iii. *Cancer*. The Agency has classified spirodiclofen as ''likely to be carcinogenic to humans.'' Quantification of cancer risk used a Q_1*(mg/kg/day)$^{-1}$ of 1.49 x 10^{-2} in human equivalents based on male rat testes Leydig cell adenoma.

As indicated above, the chronic and cancer analyses incorporated average field trial residues; processing factors from the apple, grape, plum, and orange processing studies (DEEM-FCID™ (ver. 7.76) default processing factors assumed for juice commodities); projected average percent crop treated estimates; and the SCI-GROW and/or PRZM-EXAMS drinking water estimates.

DEEM-FCID™ resulted in similar chronic and cancer risk estimates (all included drinking water), but due to differing drinking water assumptions, the result was a higher risk estimate using DEEM-FCID™. Based on a critical commodity analysis conducted in DEEM-FCID™, the major contributors to the cancer risk were water (34% of the total exposure), orange (20% of the total exposure) and apple (16% of the total exposure).

iv. *Anticipated residue and percent crop treated (PCT) information*. Section 408(b)(2)(F) of FFDCA states that the Agency may use data on the actual percent of food treated for assessing chronic dietary risk only if the Agency can make the following findings: Condition 1, that the data used are reliable and provide a valid basis to show what percentage of the food derived from such crop is likely to contain such pesticide residue; Condition 2, that the exposure estimate does not underestimate exposure for any significant subpopulation group; and Condition 3, if data are available on pesticide use and food consumption in a particular area, the exposure estimate does not understate exposure for the population in such area. In addition, the Agency must provide for periodic evaluation of any estimates used. To provide for the periodic evaluation of the estimate of PCT as required by section 408(b)(2)(F) of FFDCA, EPA may require registrants to submit data on PCT.

The Agency used PCT information as follows:

A routine chronic dietary exposure analysis for spirodiclofen was based on projected PCT for the following crops: Grapefruit - 20%; oranges except temple - 10%; grapes - 4%; peaches - 12%; apples - 13%. These are typical averages of all insecticides used to control all pests on the specific crop, taken from the Agricultural Chemical Usage 2003 Fruit Summary report published by United States Department of Agriculture National Agriculture Statistics Service (USDA/NASS). The projected percent crop treated estimates for peach, apple, and grapefruit were applied to the remaining crops in the stone fruit, pome fruit, and citrus crop groups, respectively.

The Agency believes that the three conditions previously discussed have been met. With respect to Condition 1, EPA finds that the PCT information described in Unit. C for spirodiclofen is reliable and has a valid basis. These are average usage figures of all insecticides used on the crops in question. EPA has not taken into account whether the insecticide use was directed against the pest that spirodiclofen controls but instead has averaged each insecticide's total usage. Thus, these averages are likely to overstate spirodiclofen use because many insecticides are effective against several pests and total usage of these pesticides will be significantly higher than an insecticide, such as spirodiclofen, which is used primarily against a single pest. For acute risk assessment, the highest percentages of the insecticide used on the specific crop without naming a specific pest, taken from USDA/NASS Agricultiral Chemical Usage 2003 Fruit Summary was used. This indicates the maximum use of an insecticide. Spirodiclofen use could be much lower than this because its use is targeted at a single pest and there exist other equally efficacious pesticides, that treat mites only, that are priced competitively with spirodiclofen. As to Conditions 2 and 3, regional consumption information and consumption information for significant subpopulations is taken into account through EPA's computer-based model for evaluating the exposure of significant subpopulations including several regional groups. Use of this consumption information in EPA's risk assessment process ensures that EPA's exposure estimate does not understate exposure for any significant subpopulation group and allows the Agency to be reasonably certain that no regional population is exposed to residue levels higher than those estimated by the Agency. Other than the data available through national food consumption surveys, EPA does not have available information on the regional consumption of food to which spirodiclofen may be applied in a particular area.

2. *Dietary exposure from drinking water*. The Agency lacks sufficient monitoring exposure data to complete a comprehensive dietary exposure

analysis and risk assessment for spirodiclofen in drinking water. Because the Agency does not have comprehensive monitoring data, drinking water concentration estimates are made by reliance on simulation or modeling taking into account data on the physical characteristics of spirodiclofen.

The Agency uses the FQPA Index Reservoir Screening Tool (FIRST) or the Pesticide Root Zone Model/Exposure Analysis Modeling System (PRZM/EXAMS), to produce estimates of pesticide concentrations in an index reservoir. The Screening Concentrations in Groundwater (SCI-GROW) model is used to predict pesticide concentrations in shallow ground water. For a screening-level assessment for surface water EPA will use FIRST (a Tier 1 model) before using PRZM/EXAMS (a Tier 2 model). The FIRST model is a subset of the PRZM/EXAMS model that uses a specific high-end runoff scenario for pesticides. Both FIRST and PRZM/EXAMS incorporate an index reservoir environment, and both models include a percent crop area factor as an adjustment to account for the maximum percent crop coverage within a watershed or drainage basin.

None of these models include consideration of the impact processing (mixing, dilution, or treatment) of raw water for distribution as drinking water would likely have on the removal of pesticides from the source water. The primary use of these models by the Agency at this stage is to provide a screen for sorting out pesticides for which it is unlikely that drinking water concentrations would exceed human health levels of concern.

Based on the PRZM/EXAMS and SCI-GROW models, the EECs of spirodiclofen (total residue including its three metabolites: Spirodiclofen-enol, spirodiclofen-ketohydroxy, and spirodiclofen-dihydroxy) for acute exposures are estimated to be 22.86 parts per billion (ppb) for surface water and 0.44 ppb for ground water. The EECs for chronic (non-cancer) exposures are estimated to be 4.99 ppb for surface water and 0.44 ppb for ground water. The EECs for chronic (cancer) exposures are estimated to be 1.67 ppb for surface water and 0.44 for ground water.

3. *From non-dietary exposure*. The term ''residential exposure'' is used in this document to refer to non-occupational, non-dietary exposure (e.g., for lawn and garden pest control, indoor pest control, termiticides, and flea and tick control on pets). Spirodiclofen is not registered for use on any sites that would result in residential exposure.

4. *Cumulative effects from substances with a common mechanism of toxicity*. Section 408(b)(2)(D)(v) of FFDCA requires that, when considering whether to establish, modify, or revoke a tolerance, the Agency consider ''available information'' concerning the cumulative effects of a particular pesticide's residues and ''other substances that have a common mechanism of toxicity.''

Unlike other pesticides for which EPA has followed a cumulative risk approach based on a common mechanism of toxicity, EPA has not made a common mechanism of toxicity finding as to spirodiclofen and any other substances and spirodiclofen does not appear to produce a toxic metabolite produced by other substances. For the purposes of this tolerance action, therefore, EPA has not assumed that spirodiclofen has a common mechanism of toxicity with other substances. For information regarding EPA's efforts to determine which chemicals have a common mechanism of toxicity and to evaluate the cumulative effects of such chemicals, see the policy statements released by EPA's OPP concerning common mechanism determinations and procedures for cumulating effects from substances found to have a common mechanism on EPA's web site at *http://www.epa.gov/pesticides/cumulative/*.

D. Safety Factor for Infants and Children

1. *In general*. Section 408 of the FFDCA provides that EPA shall apply an additional tenfold margin of safety for infants and children in the case of threshold effects to account for prenatal and postnatal toxicity and the completeness of the data base on toxicity and exposure unless EPA determines based on reliable data that a different margin of safety will be safe for infants and children. Margins of safety are incorporated into EPA risk assessments either directly through use of a MOE analysis or through using uncertainty (safety) factors in calculating a dose level that poses no appreciable risk to humans. In applying this provision, EPA either retains the default value of 10X when reliable data do not support the choice of a different factor, or, if reliable data are available, EPA uses a different additional safety factor value based on the use of traditional uncertainty factors and/or special FQPA safety factors, as appropriate.

2. *Prenatal and postnatal sensitivity*. There is no evidence of increased susceptibility following *in utero* and/or prenatal/postnatal exposure in the developmental toxicity studies in rabbits and 2–generation reproduction studies in rats.

In the DNT study, toxicity in the offspring (effects in the memory phase of the water maze test at post natal day 60 in females) was observed in the absence of maternal toxicity, indicating increased susceptibility.

3. *Conclusion*. The 10X FQPA Safety Factor was retained for the use of LOAEL in a critical study in calculating the reference dose for chronic risk.

E. Aggregate Risks and Determination of Safety

1. *Acute risk*. There is no risk from acute dietary exposure, as an appropriate single-dose endpoint was not identified for the acute oral exposure of the general population, including infants and children.

2. *Chronic risk*. To assess aggregate chronic risk, drinking water estimates were incorporated directly into the dietary analysis, rather than using back-calculated drinking water levels of comparison (DWLOCs). To better evaluate aggregate risk associated with exposure through food and drinking water, EPA is no longer comparing Estimated Drinking Water Concentration (EDWCs) generated by water quality models with Drinking Water Levels of Comparison (DWLOC). Instead, EPA is now directly incorporating the actual water quality model output concentrations into the risk assessment. This method of incorporating water concentrations into our aggregate assessments relies on actual CSFII-reported drinking water consumptions and more appropriately reflects the full distribution of drinking water concentrations. Using the exposure assumptions described in this unit for chronic exposure, the Lifeline™ chronic risk estimates (including drinking water) were less than the Agency's level of concern at ≤6.1% chronic population-adjusted dose (cPAD); children 1-2 years old were the most highly exposed population. The DEEM-FCID™ chronic risk estimates (including drinking water) were also less than the Agency's level of concern at ≤8.0% cPAD; all infants (<1 year old) were the most highly exposed population. EPA does not expect the aggregate exposure to exceed 100% of the cPAD, as shown in Table 3 of this unit:

TABLE 3.— AGGREGATE RISK ASSESSMENT (INCLUDING WATER) FOR CHRONIC (NON-CANCER) EXPOSURE TO SPIRODICLOFEN

Population Subgroup	cPAD (mg/kg/day)	Chronic Exposure (mg/kg/day)		%cPAD	
		DEEM-FCID™	Lifeline™	DEEM-FCID™	Lifeline™
General U.S. population	0.0065	0.000177	0.000092	3.7	1.4
All Infants (< 1 year old)		0.000517	0.000259	8.0	4.0
Children (1-2 years old)		0.000515	0.000397	7.9	6.1
Children (3-5 years old)		0.000379	0.000290	5.8	4.5
Children (6-12 years old)		0.000209	0.000132	3.2	2.0
Youth (13-19 years old)		0.000129	0.000067	2.0	1.0
Adults (20-49 years old)		0.000140	0.000068	2.2	1.0
Adults (50+ years old)		0.000150	0.000069	2.3	1.1
Females (13-49 years old)		0.000144	0.000077	2.2	1.2

3. *Short-term risk*. Short-term aggregate exposure takes into account residential exposure plus chronic exposure to food and water (considered to be a background exposure level).

Spirodiclofen is not registered for use on any sites that would result in residential exposure. Therefore, the aggregate risk is the sum of the risk from food and water, which do not exceed the Agency's level of concern.

4. *Intermediate-term risk*. Intermediate-term aggregate exposure takes into account residential exposure plus chronic exposure to food and water (considered to be a background exposure level).

Spirodiclofen is not registered for use on any sites that would result in residential exposure. Therefore, the aggregate risk is the sum of the risk from food and water, which do not exceed the Agency's level of concern.

5. *Aggregate cancer risk for U.S. population*. Under the reasonable certainty of no harm standard, in FFDCA section 408(b)(2)(A)(ii), cancer risks must be no greater than negligible. EPA has consistently interpreted negligible cancer risks to be risks within the range of an increased cancer risk of 1 in 1 million. Risks as high as 3 in 1 million have been considered to be within this risk range. To assess aggregate cancer risk, drinking water estimates were incorporated directly into the dietary analysis, as explained above in section 2 for chronic risk. Lifeline and DEEM are capable of combining exposure from food and drinking water sources for an estimate of aggregate risk from all dietary sources. Cancer aggregate risk was calculated for the U.S. population only. The Lifeline™ cancer risk estimates with drinking water estimates included was 1.36 in 1 million. Using DEEM-FCID™, the cancer risk estimate with drinking water was 1.59 in 1 million. DEEM-FCID™ resulted in in a higher cancer risk estimate due to differing drinking water assumptions. Lifeline permits incorporation of the entire PRZM-EXAMS distribution when conducting a cancer analysis while DEEM-FCID™ permits only a point estimate. The estimated cancer risk of 1.59 in 1 million is within the negligible risk range. The Agency also notes that the cancer risk estimates were generated using average residues derived from crop field trial studies (maximum application rate and minimum preharvest interval), incorporated maximum theoretical processing factors for juice, and incorporated surface drinking water estimates which assumed 87% of the basin was cropped and 100% of the cropped area was treated at the maximum rate. EPA concludes that the estimated cancer risk within the range of a risk of 1 in 1 million and therefore is negligible. A summary of aggregate cancer risk is given in Table 4 of this unit:

TABLE 4.—CANCER AGGREGATE RISK (INCLUDING DRINKING WATER) FOR SPIRODICLOFEN

Population Subgroup	Q_1*	Cancer Exposure (mg/kg/day)		Cancer Risk	
		DEEM-FCID™	Lifeline™	DEEM-FCID™	Lifeline™
General U.S. population[1]	0.0149	0.000177	0.000092	1.59×10^{-6}	1.36×10^{-6}

[1] differences between DEEM-FCID™ and Lifeline™ cancer risk estimates due to differences in the water estimates permitted in each program; DEEM-FCID™ permits only a single point drinking water estimate when conducting a cancer analysis; Lifeline™ permits incorporation of the entire PRZM-EXAMS distribution and incorporation of the SCI-GROW point estimate

6. *Determination of safety*. Based on these risk assessments, EPA concludes that there is a reasonable certainty that no harm will result to the general population, and to infants and children from aggregate exposure to spirodiclofen residues.

IV. Other Considerations

A. Analytical Enforcement Methodology

Adequate enforcement methodology (HPLC/MS-MS) is available to enforce the tolerance expression. The method may be requested from: Chief, Analytical Chemistry Branch, Environmental Science Center, 701 Mapes Rd., Ft. Meade, MD 20755–5350; telephone number: (410) 305–2905; e-mail address: *residuemethods@epa.gov*.

B. International Residue Limits

There are no Codex or Mexican maximum residue limits (MRLs) in/on the requested crops.

C. Conditions

The following confirmatory data are needed:

Toxicology. In the developmental neurotoxicity study, additional morphometric analyses of the caudate putamen, parietal cortex, hippocampal gyrus, and dentate gyrus at the mid and low doses are requested for both sexes.

Residue chemistry. Apple (juice) and grape (juice) processing studies which monitor for residue of spirodiclofen, BAJ2510, 3-OH-enol, and 4-OH-enol. Default factors were used for the risk assessment, and these studies are needed to refine the risk.

V. Conclusion

Therefore, the tolerance is established for residues of spirodiclofen (3-(2,4-dichlorophenyl)-2-oxo-1-oxaspiro[4.5]dec-3-en-4-yl 2,2-dimethylbutanoate) on grape at 2.0 ppm; grape, raisin at 4.0 ppm; grape, juice at 2.4 ppm; citrus, fruit, crop group 10 at 0.50 ppm; citrus, oil at 20 ppm; citrus, juice at 0.60 ppm; fruit, pome, crop group 11 at 0.80 ppm; apple, wet pomace at 2.0 ppm; fruit, stone, crop group 12 at 1.0 ppm; nut, tree, crop group 14 at 0.10 ppm; almond, hulls at 20 ppm; pistachio at 0.10 ppm; and for combined residues of spirodiclofen and its free enol metabolite BAJ 2510 in or on cattle, meat and cattle, fat at 0.02 ppm; cattle, meat byproducts at 0.10 ppm; goat, meat and goat, fat at 0.02 ppm; goat, meat byproducts at 0.10 ppm; sheep, meat and sheep, fat at 0.02 ppm; sheep, meat byproducts at 0.10 ppm; horse, meat and horse, fat at 0.02 ppm; horse, meat byproducts at 0.10 ppm; milk at 0.01 ppm, and milk, fat at 0.03 ppm.

VI. Objections and Hearing Requests

Under section 408(g) of FFDCA, as amended by FQPA, any person may file an objection to any aspect of this regulation and may also request a hearing on those objections. The EPA procedural regulations which govern the submission of objections and requests for hearings appear in 40 CFR part 178. Although the procedures in those regulations require some modification to reflect the amendments made to FFDCA by FQPA, EPA will continue to use those procedures, with appropriate adjustments, until the necessary modifications can be made. The new section 408(g) of FFDCA provides essentially the same process for persons to ''object'' to a regulation for an exemption from the requirement of a tolerance issued by EPA under new section 408(d) of FFDCA, as was provided in the old sections 408 and 409 of FFDCA. However, the period for filing objections is now 60 days, rather than 30 days.

A. What Do I Need to Do to File an Objection or Request a Hearing?

You must file your objection or request a hearing on this regulation in accordance with the instructions provided in this unit and in 40 CFR part 178. To ensure proper receipt by EPA, you must identify docket ID number OPP–2005–0075 in the subject line on the first page of your submission. All requests must be in writing, and must be mailed or delivered to the Hearing Clerk on or before September 12, 2005.

1. *Filing the request*. Your objection must specify the specific provisions in the regulation that you object to, and the grounds for the objections (40 CFR 178.25). If a hearing is requested, the objections must include a statement of the factual issues(s) on which a hearing is requested, the requestor's contentions on such issues, and a summary of any evidence relied upon by the objector (40 CFR 178.27). Information submitted in connection with an objection or hearing request may be claimed confidential by marking any part or all of that information as CBI. Information so marked will not be disclosed except in accordance with procedures set forth in 40 CFR part 2. A copy of the information that does not contain CBI must be submitted for inclusion in the public record. Information not marked confidential may be disclosed publicly by EPA without prior notice.

Mail your written request to: Office of the Hearing Clerk (1900L), Environmental Protection Agency, 1200 Pennsylvania Ave., NW., Washington, DC 20460–0001. You may also deliver your request to the Office of the Hearing Clerk in Suite 350, 1099 14th St., NW., Washington, DC 20005. The Office of the Hearing Clerk is open from 8 a.m. to 4 p.m., Monday through Friday, excluding legal holidays. The telephone number for the Office of the Hearing Clerk is (202) 564–6255.

2. *Copies for the Docket*. In addition to filing an objection or hearing request with the Hearing Clerk as described in Unit VI.A., you should also send a copy of your request to the PIRIB for its inclusion in the official record that is described in **ADDRESSES**. Mail your copies, identified by docket ID number OPP–2005–0075, to: Public Information and Records Integrity Branch, Information Resources and Services Division (7502C), Office of Pesticide Programs, Environmental Protection Agency, 1200 Pennsylvania Ave., NW., Washington, DC 20460–0001. In person or by courier, bring a copy to the location of the PIRIB described in **ADDRESSES**. You may also send an electronic copy of your request via e-mail to:*opp-docket@epa.gov*. Please use an ASCII file format and avoid the use of special characters and any form of encryption. Copies of electronic objections and hearing requests will also be accepted on disks in WordPerfect 6.1/8.0 or ASCII file format. Do not include any CBI in your electronic copy. You may also submit an electronic copy of your request at many Federal Depository Libraries.

B. When Will the Agency Grant a Request for a Hearing?

A request for a hearing will be granted if the Administrator determines that the material submitted shows the following: There is a genuine and substantial issue of fact; there is a reasonable possibility that available evidence identified by the requestor would, if established resolve one or more of such issues in favor of the requestor, taking into account uncontested claims or facts to the contrary; and resolution of the factual issues(s) in the manner sought by the requestor would be adequate to justify the action requested (40 CFR 178.32).

VII. Statutory and Executive Order Reviews

This final rule establishes a tolerance under section 408(d) of FFDCA in response to a petition submitted to the Agency. The Office of Management and Budget (OMB) has exempted these types of actions from review under Executive Order 12866, entitled *Regulatory Planning and Review* (58 FR 51735, October 4, 1993). Because this rule has been exempted from review under Executive Order 12866 due to its lack of

significance, this rule is not subject to Executive Order 13211, *Actions Concerning Regulations That Significantly Affect Energy Supply, Distribution, or Use* (66 FR 28355, May 22, 2001). This final rule does not contain any information collections subject to OMB approval under the Paperwork Reduction Act (PRA), 44 U.S.C. 3501 *et seq.*, or impose any enforceable duty or contain any unfunded mandate as described under Title II of the Unfunded Mandates Reform Act of 1995 (UMRA) (Public Law 104–4). Nor does it require any special considerations under Executive Order 12898, entitled *Federal Actions to Address Environmental Justice in Minority Populations and Low-Income Populations* (59 FR 7629, February 16, 1994); or OMB review or any Agency action under Executive Order 13045, entitled *Protection of Children from Environmental Health Risks and Safety Risks* (62 FR 19885, April 23, 1997). This action does not involve any technical standards that would require Agency consideration of voluntary consensus standards pursuant to section 12(d) of the National Technology Transfer and Advancement Act of 1995 (NTTAA), Public Law 104–113, section 12(d) (15 U.S.C. 272 note). Since tolerances and exemptions that are established on the basis of a petition under section 408(d) of FFDCA, such as the tolerance in this final rule, do not require the issuance of a proposed rule, the requirements of the Regulatory Flexibility Act (RFA) (5 U.S.C. 601 *et seq.*) do not apply. In addition, the Agency has determined that this action will not have a substantial direct effect on States, on the relationship between the national government and the States, or on the distribution of power and responsibilities among the various levels of government, as specified in Executive Order 13132, entitled *Federalism*(64 FR 43255, August 10, 1999). Executive Order 13132 requires EPA to develop an accountable process to ensure ''meaningful and timely input by State and local officials in the development of regulatory policies that have federalism implications.'' ''Policies that have federalism implications'' is defined in the Executive order to include regulations that have ''substantial direct effects on the States, on the relationship between the national government and the States, or on the distribution of power and responsibilities among the various levels of government.'' This final rule directly regulates growers, food processors, food handlers and food retailers, not States. This action does not alter the relationships or distribution of power and responsibilities established by Congress in the preemption provisions of section 408(n)(4) of FFDCA. For these same reasons, the Agency has determined that this rule does not have any ''tribal implications'' as described in Executive Order 13175, entitled *Consultation and Coordination with Indian Tribal Governments* (65 FR 67249, November 6, 2000). Executive Order 13175, requires EPA to develop an accountable process to ensure ''meaningful and timely input by tribal officials in the development of regulatory policies that have tribal implications.'' ''Policies that have tribal implications'' is defined in the Executive order to include regulations that have ''substantial direct effects on one or more Indian tribes, on the relationship between the Federal Government and the Indian tribes, or on the distribution of power and responsibilities between the Federal Government and Indian tribes.'' This rule will not have substantial direct effects on tribal governments, on the relationship between the Federal Government and Indian tribes, or on the distribution of power and responsibilities between the Federal Government and Indian tribes, as specified in Executive Order 13175. Thus, Executive Order 13175 does not apply to this rule.

VIII. Congressional Review Act

The Congressional Review Act, 5 U.S.C. 801 *et seq.*, as added by the Small Business Regulatory Enforcement Fairness Act of 1996, generally provides that before a rule may take effect, the agency promulgating the rule must submit a rule report, which includes a copy of the rule, to each House of the Congress and to the Comptroller General of the United States. EPA will submit a report containing this rule and other required information to the U.S. Senate, the U.S. House of Representatives, and the Comptroller General of the United States prior to publication of this final rule in the **Federal Register**. This final rule is not a ''major rule'' as defined by 5 U.S.C. 804(2).

List of Subjects in 40 CFR Part 180

Environmental protection, Administrative practice and procedure, Agricultural commodities, Pesticides and pests, Reporting and recordkeeping requirements.

Dated: June 30, 2005.

James Jones,

Director, Office of Pesticide Programs.

■ Therefore, 40 CFR chapter I is amended as follows:

PART 180—AMENDED

■ 1. The authority citation for part 180 continues to read as follows:

Authority: 21 U.S.C. 321(q), 346a and 371.

■ 2. Section 180.608 is added to read as follows:

§ 180.608 Spirodiclofen; tolerances for residues.

(a) *General.* (1) Tolerances are established for residues of spirodiclofen per se (3-(2,4-dichlorophenyl)-2-oxo-1-oxaspiro[4.5]dec-3-en-4-yl 2,2-dimethylbutanoate) in or on the following plant commodities:

Commodity	Parts per million
Almond, hulls	20.0
Apple, wet pomace	2.0
Citrus, juice	0.60
Citrus, oil	20.0
Fruit, citrus, crop group 10	0.50
Fruit, pome, crop group 11	0.80
Fruit, stone, crop group 12	1.0
Grape	2.0
Grape, juice	2.4
Grape, raisin	4.0
Nut, tree, crop group 14	0.10
Pistachio	0.10

(2) Tolerances are established for residues of spirodiclofen (3-(2,4-dichlorophenyl)-2-oxo-1-oxaspiro[4.5]dec-3-en-4-yl 2,2-dimethylbutanoate) and its free enol metabolite BAJ 2510 (3-(2,4-dichlorophenyl)-4-hydroxy-1-oxaspiro[4,5]dec-3-en-2-one) in or on the following livestock commodities:

Commodity	Parts per million
Cattle, fat	0.02
Cattle, meat byproducts	0.10
Cattle, meat	0.02
Goat, fat	0.02
Goat, meat byproducts	0.1
Goat, meat	0.02
Horse, fat	0.02
Horse, meat byproducts	0.1
Horse, meat	0.02
Milk	0.01
Milk, fat	0.03
Sheep, fat	0.02
Sheep. meat byproducts	0.1
Sheep. meat	0.02

(b) *Section 18 emergency exemptions.* [Reserved]

(c) *Tolerances with regional registrations.* [Reserved]

(d) *Indirect or inadvertent residues.* [Reserved]

[FR Doc. 05–13774 Filed 7–12–05; 8:45 am]

BILLING CODE 6560–50–S

FEDERAL COMMUNICATIONS COMMISSION

47 CFR Part 73

[DA 05–1717; MB Docket No. 05–82, RM–11170; MB Docket No. 05–83, RM–11171; MB Docket No. 05–84, RM–11172]

Radio Broadcasting Services; Coosada, Livingston, and Rockford, AL

AGENCY: Federal Communications Commission.

ACTION: Final rule.

SUMMARY: In response to a multi-docket *Notice of Proposed Rulemaking*, 70 FR 13002 (March 17, 2005), this *Report and Order* allots new FM channels in three Alabama communities, including Coosada, Livingston, and Rockford, Alabama. The Audio Division, at the request of Tempest Communications, allots Channel 226A at Coosada, Alabama. as the community's first local aural transmission service. Channel 226A can be allotted to Coosada in compliance with the Commission's technical requirements with a site restriction of 4.3 kilometers (2.7 miles) east of Coosada. The reference coordinates for Channel 226A at Coosada are 32–30–02 North Latitude and 86–17–09 West Longitude. *See* Supplementary Information, *infra*.

DATES: Effective August 8, 2005. The window period for filing applications for these allotments will not be opened at this time. Instead, the issue of opening these allotments for auction will be addressed by the Commission in a subsequent order.

ADDRESSES: Federal Communications Commission, 445 Twelfth Street, SW., Washington, DC 20554.

FOR FURTHER INFORMATION CONTACT: R. Barthen Gorman, Media Bureau, (202) 418–2180.

SUPPLEMENTARY INFORMATION: This is a synopsis of the Commission's *Report and Order*, MB Docket Nos. 05–82, 05–83, and 05–84, adopted June 22, 2005 and released June 24, 2005. The full text of this Commission decision is available for inspection and copying during regular business hours at the FCC's Reference Information Center, Portals II, 445 Twelfth Street, SW., Room CY–A257, Washington, DC 20554. The complete text of this decision may also be purchased from the Commission's duplicating contractor, Best Copy and Printing, Inc., 445 12th Street, SW., Room CY–B402, Washington, DC 20054, telephone 1–800–378–3160 or *http://www.BCPIWEB.com*. The Commission will send a copy of this *Report and Order* in a report to be sent to Congress and the Government Accountability Office pursuant to the Congressional Review Act, *see* 5 U.S.C. 801(a)(1)(A).

The Audio Division, at the request of Sumter County Broadcasting, allots Channel 242A at Livingston, Alabama, as the community's first local aural transmission service. Channel 242A can be allotted to Livingston in compliance with the Commission's technical requirements with a site restriction of 2.3 kilometers (1.4 miles) northeast of Livingston. The reference coordinates for Channel 242A at Livingston are 32–35–36 North Latitude and 88–09–57 West Longitude.

The Audio Division, at the request of Alatron Corporation, Inc., allots Channel 286A at Rockford, Alabama, as the community's first local aural transmission service. Channel 286A can be allotted to Rockford in compliance with the Commission's technical requirements with a site restriction of 11.3 kilometers (7.0 miles) east of Rockford. The reference coordinates for Channel 286A at Rockford are 32–52–15 North Latitude and 85–06–04 West Longitude.

List of Subjects in 47 CFR Part 73

Radio, Radio broadcasting.

PART 73—RADIO BROADCAST SERVICES

■ 1. The authority citation for part 73 continues to read as follows:

Authority: 47 U.S.C. 154, 303, 334 and 336.

§ 73.202 [Amended]

■ 2. Section 73.202(b), the Table of FM Allotments under Alabama, is amended by adding Coosada, Channel 226A; Livingston, Channel 242A; and Rockford, Channel 286A.

Federal Communications Commission.

John A. Karousos,

Assistant Chief, Audio Division, Media Bureau.

[FR Doc. 05–13566 Filed 7–12–05; 8:45 am]

BILLING CODE 6712–01–P

FEDERAL COMMUNICATIONS COMMISSION

47 CFR Part 73

[DA 05–1733; MB Docket No. 05–80; RM–11160]

Radio Broadcasting Services; Booneville and Guntown, MS

AGENCY: Federal Communications Commission.

ACTION: Final rule.

SUMMARY: In response to a *Notice of Proposed Rule Making*, 70 FR 13003 (March 17, 2005), this document substitutes Channel 257C3 for Channel 257A at Booneville, Mississippi, reallots Channel 257C3 to Guntown, Mississippi, and modifies the license of Station WBVV(FM), accordingly. The coordinates for Channel 257C3 at Guntown are 34–21–42 North Latitude and 88–35–34 West Longitude, with a site restriction of 11.1 kilometers (6.9 miles) southeast of the community.

DATES: Effective August 8, 2005.

FOR FURTHER INFORMATION CONTACT: Helen McLean, Media Bureau, (202) 418–2738.

SUPPLEMENTARY INFORMATION: This is a synopsis of the Commission's *Report and Order*, MB Docket No. 05–80, adopted June 22, 2005, and released June 24, 2005. The full text of this Commission decision is available for inspection and copying during regular business hours at the FCC's Reference Information Center, Portals II, 445 Twelfth Street, SW., Room CY–A257, Washington, DC 20554. The complete text of this decision may also be purchased from the Commission's duplicating contractor, Best Copy and Printing, Inc., 445 12th Street, SW., Room CY–B402, Washington, DC 20554, telephone 1–800–378–3160 or *http://www.BCPIWEB.com*. The Commission will send a copy of this *Report and Order* in a report to be sent to Congress and the Government Accountability Office pursuant to the Congressional Review Act, *see* 5 U.S.C. 801(a)(1)(A).

List of Subjects in 47 CFR Part 73

Radio, Radio broadcasting.

■ Part 73 of Title 47 of the Code of Federal Regulations is amended as follows:

PART 73—RADIO BROADCAST SERVICES

■ 1. The authority citation for part 73 reads as follows:

Authority: 47 U.S.C. 154, 303, 334 and 336.

§ 73.202 [Amended]

■ 2. Section 73.202(b), the Table of FM Allotments under Mississippi, is amended by removing Booneville, Channel 257A and by adding Guntown, Channel 257C3.

Federal Communications Commission.

John A. Karousos,

Assistant Chief, Audio Division, Media Bureau.

[FR Doc. 05–13567 Filed 7–12–05; 8:45 am]

BILLING CODE 6712–01–M

FEDERAL COMMUNICATIONS COMMISSION

47 CFR Part 73

[DA 05–1716; MB Docket No. 04–420, RM–11119]

Radio Broadcasting Services; Corydon and Morganfield, KY

AGENCY: Federal Communications Commission.

ACTION: Final rule.

SUMMARY: At the request of Union County Broadcasting Co., Inc., licensee of Station WMSK–FM, Morganfield, Kentucky, the Audio Division substitutes Channel 237C3 for Channel 237A at Morganfield, reallots Channel 237C3 from Morganfield to Corydon, Kentucky, as the community's first local transmission service, and then modifies the license for Station WMSK–FM to reflect the changes. *See* 69 FR 75017, December 15, 2004. Channel 237C3 is reallotted at Corydon at Petitioners' proposed site Channel 237C3 is reallotted at Corydon at petitioner's proposed site 11.1 kilometers (6.9 miles) southwest of the community at coordinates 37–41–31 NL and 87–48–45 WL.

DATES: Effective August 11, 2005.

ADDRESSES: Federal Communications Commission, 445 Twelfth Street, SW., Washington, DC 20554.

FOR FURTHER INFORMATION CONTACT: Victoria M. McCauley, Media Bureau, (202) 418–2180.

SUPPLEMENTARY INFORMATION: This is a synopsis of the Commission's *Report and Order*, MB Docket No. 04–420, adopted June 23, 2005, and released June 27, 2005. The full text of this Commission decision is available for inspection and copying during regular business hours at the FCC's Reference Information Center, Portals II, 445 Twelfth Street, SW., Room CY–A257, Washington, DC 20554. The complete text of this decision may also be purchased from the Commission's duplicating contractor, Best Copy and Printing, Inc., 445 12th Street, SW., Room CY–B402, Washington, DC 20054, telephone 1–800–378–3160 or *http://www.BCPIWEB.com*. The Commission will send a copy of this *Report and Order* in a report to be sent to Congress and the Government Accountability Office pursuant to the Congressional Review Act, *see* 5 U.S.C. 801(a)(1)(A).

List of Subjects in 47 CFR Part 73

Radio, Radio broadcasting.

■ 47 CFR part 73 is amended as follows:

PART 73—RADIO BROADCAST SERVICES

■ 1. The authority citation for part 73 continues to read as follows:

Authority: 47 U.S.C. 154, 303, 334 and 336.

§ 73.202 [Amended]

■ 2. Section 73.202(b), the Table of FM Allotments under Kentucky, is amended by removing Morganfield, Channel 237A and by adding Corydon, Channel 237C3.

Federal Communications Commission.

John A. Karousos,

Assistant Chief, Audio Division, Media Bureau.

[FR Doc. 05–13568 Filed 7–12–05; 8:45 am]

BILLING CODE 6712–01–P

FEDERAL COMMUNICATIONS COMMISSION

47 CFR Part 73

[DA 05–1777; MB Docket No. 04–124, RM–10936, RM–10937, RM–10938, RM–10939]

Radio Broadcasting Services; Dallas, Oregon

AGENCY: Federal Communications Commission.

ACTION: Final Rule.

SUMMARY: The Audio Division, on its own motion, grants Petitions for Rule Making filed separately by Northwest Community Radio Project, Dallas, Oregon Seventh-day Adventist Church, Radio Bilingue, Inc. and Lifetime Ministries, Inc. proposing the reservation of vacant Channel 252C3 at Dallas, Oregon for noncommercial educational. *See* 69 FR 26353, May 12, 2004. A staff engineering analysis determines that Channel *252C3 can be allotted at Dallas Oregon in compliance with the commission's minimum distance spacing requirements at reference coordinates 44–55–06 NL and 123–19–00 WL.

DATES: Effective August 11, 2005.

ADDRESSES: Federal Communications Commission, 445 Twelfth Street, SW., Washington, DC 20054.

FOR FURTHER INFORMATION CONTACT: Rolanda F. Smith, Media Bureau, (202) 418–2180.

SUPPLEMENTARY INFORMATION: This is a synopsis of the commission's Report and Order, MB Docket No. 04–124, adopted June 23, 2005, and released June 27, 2005. The full text of this Commission decision is available for inspection and copying during regular business hours at the FCC's Reference Information Center, Portals II, 445 Twelfth Street, SW., Room CY–A257, Washington, DC 20554. The complete text of this decision may also be purchased from the Commission's duplicating contractor, Best Copy and Printing, Inc., 445 12th Street, SW., Room CY–B402, Washington, DC 20054, telephone 1–800–378–3160 or *http://www.BCPIWEB.com*. The Commission will send a copy of this *Memorandum Opinion and Order* in a report to be sent to Congress and the Government Accountability Office pursuant to the Congressional Review Act, *see* 5 U.S.C. 801(a)(1)(A).

List of Subjects in 47 CFR Part 73 Radio, Radio broadcasting.

■ Part 73 of Title 47 of the CFR is amended as follows:

PART 73—RADIO BROADCAST SERVICES

■ 1. The authority citation for part 73 continues to read as follows:

Authority: 47 U.S.C. 154, 303, 334 and 336.

§ 73.202 [Amended]

■ 2. Section 73.202(b), the Table of FM Allotments under Oregon, is amended by removing Channel 252C3 and by adding Channel *252C3 at Dallas.

Federal Communications Commission.

John A. Karousos,

Assistant Chief, Audio Division, Media Bureau.

[FR Doc. 05–13569 Filed 6–12–05; 8:45 am]

BILLING CODE 6712–01–M

FEDERAL COMMUNICATIONS COMMISSION

47 CFR Part 73

[DA 05–1778; MB Docket No. 04–82, RM–10877]

Radio Broadcasting Services; Pima, AZ

AGENCY: Federal Communications Commission.

ACTION: Final rule.

SUMMARY: The Audio Division grants a Petition for Rule Making filed by

Calvary Chapel of Tucson requesting the reservation of vacant Channel 296A at Pima, Arizona for noncommercial educational use. *See* 69 FR 18860, April 9, 2004. A staff engineering analysis determines that Channel *296A can be allotted at Pima in compliance with the Commission's minimum distance spacing requirements at reference coordinates 32–53–36 NL and 109–49–42 WL.

DATES: Effective August 11, 2005.

ADDRESSES: Federal Communications Commission, 445 Twelfth Street, SW., Washington, DC 20554.

FOR FURTHER INFORMATION CONTACT: Rolanda F. Smith, Media Bureau, (202) 418–2180.

SUPPLEMENTARY INFORMATION: This is a synopsis of the Commission's Report and Order, MB Docket No. 04–82, adopted June 23, 2005, and released June 27, 2005. The full text of this Commission decision is available for inspection and copying during regular business hours at the FCC's Reference Information Center, Portals II, 445 Twelfth Street, SW., Room CY–A257, Washington, DC 20554. The complete text of this decision may also be purchased from the Commission's duplicating contractor, Best Copy and Printing, Inc., 445 12th Street, SW., Room CY–B402, Washington, DC, 20054, telephone 1–800–378–3160 or *http://www.BCPIWEB.com*. The Commission will send a copy of this *Report and Order* in a report to be sent to Congress and the Government Accountability Office pursuant to the Congressional Review Act, *see* 5 U.S.C. 801(a)(1)(A).

List of Subjects in 47 CFR Part 73

Radio, Radio broadcasting.

PART 73—RADIO BROADCAST SERVICES

■ 1. The authority citation for part 73 continues to read as follows:

Authority: 47 U.S.C. 154, 303, 334 and 336.

§ 73.202 [Amended]

■ 2. Section 73.202(b), the Table of FM Allotments under Arizona, is amended by removing Channel 296A and by adding Channel *296A at Pima.

Federal Communications Commission.

John A. Karousos,

Assistant Chief, Audio Division, Media Bureau.

[FR Doc. 05–13570 Filed 7–12–05; 8:45 am]

BILLING CODE 6712–01–P

FEDERAL COMMUNICATIONS COMMISSION

47 CFR Part 73

[DA 05–1719; MB Docket No. 05–141, RM–11219; MB Docket No. 05–76, RM–11167; MB Docket No. 05–77, RM–11168; MB Docket No. 05–87, RM–11166; and MB Docket No. 05–78, RM–11169]

Radio Broadcasting Services; Covington, OK; Poultney, VT; Silver Springs, NV; Spur, TX; Strong, AR

AGENCY: Federal Communications Commission.

ACTION: Final rule.

SUMMARY: The Audio Division, at the request of Charles Crawford, allots Channel 296C3 at Strong, Arkansas, as the community's first local FM service. Channel 296C3 can be allotted to Strong, Arkansas, in compliance with the Commission's minimum distance separation requirements with a site restriction of 14.3 km (8.9 miles) north of Strong. The coordinates for Channel 296C3 at Strong, Arkansas, are 33–14–00 North Latitude and 92–18–00 West Longitude. *See* **SUPPLEMENTARY INFORMATION** *infra.*

DATES: Effective August 8, 2005.

FOR FURTHER INFORMATION CONTACT: Deborah Dupont, Media Bureau, (202) 418–2180.

SUPPLEMENTARY INFORMATION: This is a synopsis of the Commission's *Report and Order*, MB Docket Nos. 05–141, 05–76, 05–77, 05–87, and 05–78, adopted June 22, 2005, and released June 24, 2005. The full text of this Commission decision is available for inspection and copying during normal business hours in the FCC Information Center, Portals II, 445 12th Street, SW., Room CY–A257, Washington, DC 20554. The complete text of this decision also may be purchased from the Commission's duplicating contractor, Best Copy and Printing, Inc., 445 12th Street, SW., Room CY–B402, Washington, DC, 20554, (800) 378–3160, or via the company's Web site, *http://www.bcpiweb.com*. The Commission will send a copy of this *Report and Order* in a report to be sent to Congress and the Government Accountability Office pursuant to the Congressional Review Act, *see* U.S.C. 801(a)(1)(A).

The Audio Division further, at the request of Dana J. Puopolo, allots Channel 273C at Silver Springs, Nevada, as the community's first local FM service. Channel 273C can be allotted to Silver Springs, Nevada, in compliance with the Commission's minimum distance separation requirements with a site restriction of 47.7 km (29.7 miles) east of Silver Spring. The coordinates for Channel 273C at Silver Springs, Nevada, are 39–30–00 North Latitude and 118–40–48 West Longitude.

The Audio Division, at the request of Charles Crawford, allots Channel 290A at Covington, Oklahoma, as the community's first local FM service. Channel 290A can be allotted to Covington, Oklahoma, in compliance with the Commission's minimum distance separation requirements with a site restriction of 5.7 km (3.5 miles) east of Covington. The coordinates for Channel 239B at Covington, Oklahoma, are 36–18–26 North Latitude and 97–31–31 West Longitude.

The Audio Division, at the request of Jeraldine Anderson, allots Channel 260C3 at Spur, Texas, as the community's second local FM service. Channel 260C3 can be allotted to Spur, Texas, in compliance with the Commission's minimum distance separation requirements with a site restriction of 13.4 km (8.4 miles) west of Spur. The coordinates for Channel 260C3 at Spur, Texas, are 33–28–30 North Latitude and 101–00–00 West Longitude.

The Audio Division, at the request of Dana J. Puopolo, allots Channel 223A at Poultney, Vermont, as the community's first local FM service. Channel 223A can be allotted to Poultney, Vermont, in compliance with the Commission's minimum distance separation requirements at center city reference coordinates, without site restriction. The coordinates for Channel 223A at Poultney, Vermont, are 43–31–06 North Latitude and 73–14–06 West Longitude. Concurrence in a specially-negotiated, short-spaced allotment is required because the proposed allotment is located within 320 kilometers (199 miles) of the U.S.-Canadian border. Although Canadian concurrence has been requested, notification has not been received. If a construction permit for Channel 223A at Poultney, Vermont, is granted prior to receipt of formal concurrence by the Canadian government, the authorization will include the following condition: ''Operation with the facilities specified herein for Poultney, Vermont, is subject to the modification, suspension, or termination without right to hearing, if found by the Commission to be necessary in order to conform to the Canada-United States FM Broadcast Agreement, or if specifically objected to by Industry Canada.''

List of Subjects in 47 CFR Part 73

Radio, Radio broadcasting.

■ Part 73 of title 47 of the Code of Federal Regulations is amended as follows:

PART 73—RADIO BROADCAST SERVICES

■ 1. The authority citation for part 73 continues to read as follows:

Authority: 47 U.S.C. 154, 303, 334 and 336.

§ 73.202 [Amended]

■ 2. Section 73.202(b), the Table of FM Allotments under Arkansas, is amended by adding Strong, Channel 296C3.

■ 3. Section 73.202(b), the Table of FM Allotments under Nevada, is amended by adding Silver Springs, Channel 273C.

■ 4. Section 73.202(b), the Table of FM Allotments under Oklahoma, is amended by adding Covington, Channel 290A.

■ 5. Section 73.202(b), the Table of FM Allotments under Texas, is amended by adding Channel 260C3 at Spur.

■ 6. Section 73.202(b), the Table of FM Allotments under Vermont, is amended by adding Poultney, Channel 223A.

Federal Communications Commission.

John A. Karousos,

Assistant Chief, Audio Division, Media Bureau.

[FR Doc. 05–13571 Filed 7–12–05; 8:45 am]

BILLING CODE 6712–01–P

FEDERAL COMMUNICATIONS COMMISSION

47 CFR Part 73

[DA 05–1736; MB Docket No. 04–429, RM–11120]

Radio Broadcasting Services; Burlington and Cary, NC

AGENCY: Federal Communications Commission.

ACTION: Final rule.

SUMMARY: The Audio Division, at the request of Capstar TX Limited Partnership, licensee of Station WRSN–FM, Channel 230C, Burlington, North Carolina, deletes Channel 230C at Burlington, North Carolina, from the FM Table of Allotments, allots Channel 230C at Cary, North Carolina, as the community's first local FM service, and modifies the license of Station WRSN–FM to specify operation on Channel 230C at Cary. Channel 230C can be allotted to Cary, North Carolina, in compliance with the Commission's minimum distance separation requirements with a site restriction of 35.4 km (22.0 miles) west of Cary. The coordinates for Channel 230C at Cary, North Carolina, are 35–52–15 North Latitude and 79–09–40 West Longitude.

DATES: Effective August 8, 2005.

FOR FURTHER INFORMATION CONTACT: Deborah Dupont, Media Bureau, (202) 418–2180.

SUPPLEMENTARY INFORMATION: This is a synopsis of the Commission's *Report and Order*, MB Docket No. 04–429, adopted June 22, 2005, and released June 24, 2005. The full text of this Commission decision is available for inspection and copying during normal business hours in the FCC Information Center, Portals II, 445 12th Street, SW., Room CY–A257, Washington, DC 20554. The complete text of this decision also may be purchased from the Commission's duplicating contractor, Best Copy and Printing, Inc., 445 12th Street, SW., Room CY–B402, Washington, DC, 20554, (800) 378–3160, or via the company's Web site, *http://www.bcpiweb.com*. The Commission will send a copy of this *Report and Order* in a report to be sent to Congress and the Government Accountability Office pursuant to the Congressional Review Act, *see* U.S.C. 801(a)(1)(A).

List of Subjects in 47 CFR Part 73

Radio, Radio broadcasting.

Part 73 of title 47 of the Code of Federal Regulations is amended as follows:

PART 73—RADIO BROADCAST SERVICES

1. The authority citation for part 73 continues to read as follows:

Authority: 47 U.S.C. 154, 303, 334 and 336.

§ 73.202 [Amended]

■ 2. Section 73.202(b), the Table of FM Allotments under North Carolina, is amended by removing Channel 230C at Burlington and by adding Cary, Channel 230C.

Federal Communications Commission.

John A. Karousos,

Assistant Chief, Audio Division, Media Bureau.

[FR Doc. 05–13572 Filed 7–12–05; 8:45 am]

BILLING CODE 6712–01–P

FEDERAL COMMUNICATIONS COMMISSION

47 CFR Part 73

[DA 05–1732, MB Docket No. 04–300, RM–11022, RM–11105]

Radio Broadcasting Services; Fruita and Hotchkiss, CO

AGENCY: Federal Communications Commission.

ACTION: Final rule.

SUMMARY: This document grants a petition filed by Dana Puopolo proposing the allotment of Channel 255C3 at Fruita, Colorado, as that community's second local service. *See* 69 FR 51034, published August 17, 2004. This document also grants a counterproposal filed by Hotchkiss Communications by allotting Channel 258C3 at Hotchkiss, Colorado, as its first local service. Channel 255C3 can be allotted to Fruita, Colorado with a site restriction of 14 kilometers (8.7 miles) northeast at coordinates 39–15–05 NL and 108–50–16 WL. This site restriction is necessary to avoid short-spacing to the New FM station, Channel 253C3 at Palisade, Colorado. Channel 258C3 can be allotted to Hotchkiss, Colorado with a site restriction of 3.8 kilometers (2.4 miles) south at coordinates 38–46–03 NL and 107–42–17 WL. This site restriction is necessary to avoid short-spacing to FM Station KEKB, Channel 260C, Fruita, Colorado.

DATES: Effective August 8, 2005.

ADDRESSES: Federal Communications Commission, 445 Twelfth Street, SW., Washington, DC 20554.

FOR FURTHER INFORMATION CONTACT: Rolanda F. Smith, Media Bureau, (202) 418–2180.

SUPPLEMENTARY INFORMATION: This is a summary of the Commission's *Report and Order*, MB Docket No. 04–300, adopted June 22, 2005, and released June 24, 2005. The full text of this Commission decision is available for inspection and copying during normal business hours in the Commission's Reference Center, 445 Twelfth Street, SW., Washington, DC 20554.

The complete text of this decision may also be purchased from the Commission's duplicating contractor, Best Copy and Printing, Inc., 445 12th Street, SW., Room CY–B402, Washington, DC, 20054, telephone 1–800–378–3160 or *http://www.BCPIWEB.com*. The Commission will send a copy of this *Report and Order* in a report to be sent to Congress and the Government Accountability Office pursuant to the Congressional Review Act, *see* 5 U.S.C. 801(a)(1)(A).

List of Subjects in 47 CFR Part 73

Radio, Radio broadcasting.

PART 73—RADIO BROADCAST SERVICES

■ 1. The authority citation for part 73 continues to read as follows:

Authority: 47 U.S.C. 154, 303, 334 and 336.

§ 73.202 [Amended]

■ 2. Section 73.202(b), the Table of FM Allotments under Colorado, is amended by adding Channel 255C3 at Fruita and by adding Hotchkiss, Channel 258C3.

Federal Communications Commission.

John A. Karousos,

Assistant Chief, Audio Division, Media Bureau.

[FR Doc. 05–13565 Filed 7–12–05; 8:45 am]

BILLING CODE 6712–01–P

FEDERAL COMMUNICATIONS COMMISSION

47 CFR Part 76

[MB Docket No. 05–89; FCC 05–119]

Implementation of Section 207 of the Satellite Home Viewer Extension and Reauthorization Act of 2004; Reciprocal Bargaining Obligation

AGENCY: Federal Communications Commission.

ACTION: Final rule.

SUMMARY: In this item, the Commission adopts final rules implementing Section 207 of the Satellite Home Viewer Extension and Reauthorization Act of 2004. Because the Commission has in place existing rules governing good faith retransmission consent negotiations, we conclude that the most faithful and expeditious implementation of the amendments contemplated in the SHVERA is to extend to MVPDs the existing good faith bargaining obligation imposed on broadcasters under our rules. The item accordingly amends the Commission's rules to apply equally to broadcasters and MVPDs. We also conclude that the reciprocal bargaining obligation applies to retransmission consent negotiations between all broadcasters and MVPDs regardless of the designated market area in which they are located. Because the text of the statute applies without qualification to ''television broadcast stations,'' ''multichannel video programming distributors'' and ''retransmission consent agreements,'' the item concludes that the reciprocal bargaining obligation applies to all retransmission consent agreements.

DATES: Effective August 12, 2005.

FOR FURTHER INFORMATION CONTACT: For additional information on this proceeding, contact Steven Broeckaert, *Steven.Broeckaert@fcc.gov* of the Media Bureau, Policy Division, (202) 418–2120.

SUPPLEMENTARY INFORMATION: This is a summary of the Federal Communications Commission's Report and Order, FCC 05–119, adopted on June 6, 2005 and released on June 7, 2005. The full text of this document is available for public inspection and copying during regular business hours in the FCC Reference Center, Federal Communications Commission, 445 12th Street, SW., CY–A257, Washington, DC, 20554. These documents will also be available via ECFS (*http://www.fcc.gov/cgb/ecfs/*). (Documents will be available electronically in ASCII, Word 97, and/or Adobe Acrobat.) The complete text may be purchased from the Commission's copy contractor, Best Copy and Printing, Inc., 445 12th Street, SW., Room CY–B402, Washington, DC 20554. To request this document in accessible formats (computer diskettes, large print, audio recording, and Braille), send an e-mail to fcc504@fcc.gov or call the Commission's Consumer and Governmental Affairs Bureau at (202) 418–0530 (voice), (202) 418–0432 (TTY).

Paperwork Reduction Act

This document does not contain proposed information collection(s) subject to the Paperwork Reduction Act of 1995 (PRA), Public Law 104–13. In addition, therefore, it does not contain any new or modified ''information collection burden for small business concerns with fewer than 25 employees,'' pursuant to the Small Business Paperwork Relief Act of 2002, Public Law 107–198, *see* 44 U.S.C. 3506(c)(4).

Summary of the Report and Order

1. In this Report and Order (''*Order*''), we adopt rules implementing Section 207 of the Satellite Home Viewer Extension and Reauthorization Act of 2004 (''SHVERA''). The Satellite Home Viewer Extension and Reauthorization Act of 2004, Public Law 108–447, 207, 118 Stat. 2809, 3393 (2004) (to be codified at 47 U.S.C. 325). The SHVERA was enacted on December 8, 2004 as title IX of the ''Consolidated Appropriations Act, 2005.'' The SHVERA requires that the Commission prescribe regulations implementing Section 207 within 180 days after the date of the enactment thereof. Section 207 extends section 325(b)(3)(C) of the Communications Act until 2010 and amends that section to impose a reciprocal good faith retransmission consent bargaining obligation on multichannel video programming distributors (''MVPDs''). This section alters the bargaining obligations created by the Satellite Home Viewer Improvement Act of 1999 (''SHVIA'') which imposed a good faith bargaining obligation only on broadcasters. SHVIA was enacted as title I of the Intellectual Property and Communications Omnibus Reform Act of 1999 (relating to copyright licensing and carriage of broadcast signals by satellite carriers, codified in scattered Sections of 17 and 47 U.S.C.), Public Law 106–113, 113 Stat. 1501, Appendix I (1999). As discussed below, because the Commission has in place existing rules governing good faith retransmission consent negotiations and because Congress did not instruct us through the SHVERA to modify those rules in any substantive way, we conclude that the most faithful and expeditious implementation of the amendments contemplated in Section 207 of the SHVERA is to extend to MVPDs the existing good faith bargaining obligation imposed on broadcasters under our rules. We also conclude that the reciprocal bargaining obligation applies to retransmission consent negotiations between all broadcasters and MVPDs regardless of the designated market area in which they are located.

II. Background

2. Section 325(b)(3)(C) of the Communications Act, as enacted by the SHVIA, instructed the Commission to commence a rulemaking proceeding to revise the regulations by which television broadcast stations exercise their right to grant retransmission consent; *see* 47 U.S.C. 325(b)(3)(C). Specifically, that section required that the Commission, until January 1, 2006:

> Prohibit a television broadcast station that provides retransmission consent from engaging in exclusive contracts for carriage or failing to negotiate in good faith, and it shall not be a failure to negotiate in good faith if the television broadcast station enters into retransmission consent agreements containing different terms and conditions, including price terms, with different multichannel video programming distributors if such different terms and conditions are based on competitive marketplace considerations; *see* 47 U.S.C. 325(b)(3)(C)(ii).

The Commission issued a Notice of Proposed Rulemaking seeking comment on how best to implement the good faith and exclusivity provisions of the SHVIA; *see Implementation of the Satellite Home Viewer Improvement Act of 1999: Retransmission Consent Issues*, 14 FCC Rcd 21736 (1999) (''*Good Faith Notice*''). After considering the comments received in response to the notice, the Commission adopted rules implementing the SHVIA good faith provisions and complaint procedures for alleged rule violations; *see Implementation of the Satellite Home*

Viewer Improvement Act of 1999: Retransmission Consent Issues, 15 FCC Rcd 5445 (2000) *(''Good Faith Order''), recon. granted in part,* 16 FCC Rcd 15599 (2001).

3. The *Good Faith Order* determined that Congress did not intend to subject retransmission consent negotiation to detailed substantive oversight by the Commission; *see Good Faith Order*, 15 FCC Rcd at 5450. Instead, the order found that Congress intended that the Commission follow established precedent, particularly in the field of labor law, in implementing the good faith retransmission consent negotiation requirement; *see Good Faith Order*, 15 FCC Rcd at 5453–54. Consistent with this conclusion, the *Good Faith Order* adopted a two-part test for good faith. The first part of the test consists of a brief, objective list of negotiation standards; *see Good Faith Order*, 15 FCC Rcd at 5457–58. First, a broadcaster may not refuse to negotiate with an MVPD regarding retransmission consent. Second, a broadcaster must appoint a negotiating representative with authority to bargain on retransmission consent issues. Third, a broadcaster must agree to meet at reasonable times and locations and cannot act in a manner that would unduly delay the course of negotiations. Fourth, a broadcaster may not put forth a single, unilateral proposal. Fifth, a broadcaster, in responding to an offer proposed by an MVPD, must provide considered reasons for rejecting any aspects of the MVPD's offer. Sixth, a broadcaster is prohibited from entering into an agreement with any party conditioned upon denying retransmission consent to any MVPD. Finally, a broadcaster must agree to execute a written retransmission consent agreement that sets forth the full agreement between the broadcaster and the MVPD; *see Good Faith Order*, 15 FCC Rcd at 5457–58; 47 CFR 76.65(b)(1)(i)–(vii).

4. The second part of the good faith test is based on a totality of the circumstances standard. Under this standard, an MVPD may present facts to the Commission which, even though they do not allege a violation of the specific standards enumerated above, given the totality of the circumstances constitute a failure to negotiate in good faith; *see Good Faith Order*, 15 FCC Rcd at 5458; 47 CFR 76.65(b)(2).

5. The *Good Faith Order* provided examples of negotiation proposals that presumptively are consistent and inconsistent with ''competitive marketplace considerations;'' *see Good Faith Order*, 15 FCC Rcd at 5469–70. The *Good Faith Order* found that it is implicit in Section 325(b)(3)(C) that any effort to further anti-competitive ends through the negotiation process would not meet the good faith negotiation requirement; *see Good Faith Order*, 15 FCC Rcd at 5470. The order stated that considerations that are designed to frustrate the functioning of a competitive market are not ''competitive marketplace considerations.'' Further, conduct that is violative of national policies favoring competition—that, for example, is intended to gain or sustain a monopoly, an agreement not to compete or to fix prices, or involves the exercise of market power in one market in order to foreclose competitors from participation in another market—is not within the competitive marketplace considerations standard included in the statute; *see Good Faith Order*, 15 FCC Rcd at 70.

6. Finally, the *Good Faith Order* established procedural rules for the filing of good faith complaints pursuant to § 76.7 of the Commission's rules; *see* 47 CFR 76.65(c); 47 CFR 76.7. The burden of proof is on the complainant to establish a good faith violation and complaints are subject to a one year limitations period; *see* 47 CFR 76.65(d) and (e).

III. Discussion

7. In enacting the SHVERA good faith negotiation obligation for MVPDs, Congress used language identical to that of the SHVIA imposing a good faith obligation on broadcasters, requiring the Commission, until January 1, 2010, to:

> prohibit a multichannel video programming distributor from failing to negotiate in good faith for retransmission consent under this section, and it shall not be a failure to negotiate in good faith if the distributor enters into retransmission consent agreements containing different terms and conditions, including price terms, with different broadcast stations if such different terms and conditions are based on competitive marketplace considerations; *see* 47 U.S.C. 325(b)(3)(C)(iii).

The Commission issued a Notice of Proposed Rulemaking seeking comment on how to implement the reciprocal bargaining obligation set forth in the SHVERA; *see Implementation of Section 207 of the Satellite Home Viewer Extension and Reauthorization Act of 2004: Reciprocal Bargaining Obligations,* FCC 05–49 (rel. March 7, 2005) (''*Notice*''). The Commission also requested comment on whether the good faith negotiating standards may be different for carriage of television broadcast stations outside of their designated market area (''DMA''). A DMA is a geographic market designation created by Nielsen Media Research that defines each television market exclusive of others, based on measured viewing patterns. Essentially, each county in the United States is allocated to a market based on which home-market stations receive a preponderance of total viewing hours in the county. For purposes of this calculation, both over-the-air and cable television viewing are included.

A. The Reciprocal Bargaining Obligation for Entities Within the Same DMA

8. In the *Notice,* the Commission observed that Congress did not instruct the Commission to amend its existing good faith rules in any way other than to implement the statutory extension and impose the good faith obligation on MVPDs. Accordingly, the Commission stated that it did not believe that Congress intended that the Commission revisit the findings and conclusions that were reached in the SHVIA rulemaking. The little legislative history directly applicable to Section 207 supports this approach and, in pertinent part, provides:

> In light of evidence that retransmission negotiations continue to be contentious, the Committee chose to extend these obligations, and also to begin applying the good-faith obligations to MVPDs. The Committee intends the MVPD good-faith obligations to be analogous to those that apply to broadcasters, and not to affect the ultimate ability of an MVPD to decide not to enter into retransmission consent with a broadcaster; *see* H.R. Rep. No. 108–634, 108th Cong., 2nd Sess. 19 (2004) (''House Report'').

The *Notice* stated that the Commission believed that the implementation of Section 207 most consistent with the apparent intent of Congress is to amend our existing rules to apply equally to both broadcasters and MVPDs and tentatively concluded §§ 76.64(l) and 76.65 should be amended accordingly. The *Notice* sought comment on that approach and any other reasonable implementation of Section 207.

9. The majority of commenters agreed with the implementation proposed by the Commission in the *Notice* as it applies to in-market negotiations. The Network Affiliates assert that:

> [b]ecause it is presumed that Congress acts with knowledge of the existing regulatory framework when it enacts new legislation, including when the new law incorporates the language of the prior law, the *Notice*'s conclusion that ''Congress did not intend that the Commission revisit the findings and conclusions that were reached in the SHVIA rulemaking'' is undoubtedly correct, as is the *Notice*'s tentative conclusion ''to amend our existing rules to apply equally to both broadcasters and MVPDs.''

10. EchoStar asserts, however, that MVPDs and broadcasters occupy significantly different positions when negotiating retransmission consent and

that the Commission should recognize this distinction when applying the totality of the circumstances test and in determining whether specific terms and conditions are consistent with ''competitive market place conditions.'' EchoStar asserts that it would be premature to provide an extensive list of bargaining conduct that could be considered a failure to negotiate in good faith under the totality of the circumstances test and advises that the Commission pursue such measures on a case-by-case basis. Finally, EchoStar argues that the Commission should clarify that tying is not consistent with competitive marketplace considerations if it would violate the antitrust laws.

11. NCTA argues that:

> Congress intended that broadcasters *have to* offer to make their programming available to all MVPDs at some price or other terms. Otherwise, one MVPD could obtain de facto exclusivity over a broadcaster's signal.
>
> * * * * *
>
> MVPDs, on the other hand, have a duty to carry a local broadcast signal if the broadcaster opts for mandatory carriage, but no duty to agree to pay or carry a broadcaster if it elects *retransmission consent.* Indeed, Congress made clear in Section 207 that it intends the ''analogous'' good faith obligations to ''*not affect the ultimate ability of an MVPD to decide not to enter into retransmission consent with a broadcaster.*''

Absent an MVPD's ability to ultimately refuse carriage of a broadcaster that has elected retransmission consent, argues NCTA, reciprocal good faith bargaining rules simply turn retransmission consent into another form of must carry but with the possibility of payment in addition. NCTA states that it is broadcasters' unique status as users of public spectrum with the obligation to provide free over-the-air signals and ability to exact mandatory carriage on cable and satellite providers that triggers their obligation to negotiate retransmission consent in good faith in all instances. NCTA asserts that there are ''no corresponding reasons why cable operators should be required to negotiate to carry the signals of broadcasters that have specifically elected to forgo their statutory right to be carried.'' Citing a ''host of legitimate editorial and business reasons why a cable operator could decide not to carry a particular broadcast station,'' NCTA maintains that the Commission should interpret the good faith negotiation rules to give MVPDs the right to refuse to enter into retransmission consent negotiations. NAB counters that NCTA's argument nullifies the language of the statute imposing a reciprocal good faith negotiation obligation on MVPDs and Congress's intent that such obligation ''be analogous [to] those that apply to broadcasters.'' At the very least, NCTA asserts, the Commission should confirm that cable operators have the right to insist upon carriage compensation in all retransmission consent negotiations.

12. Arguing that the Commission has recognized the imbalance of power in retransmission consent negotiations between media conglomerates and small and medium sized cable operators, ACA requests that the Commission adopt procedural protections for these cable operators. ACA requests that the Commission require that broadcasters give 30 days written notice to a small or medium sized cable operator of their intent to file a good faith complaint. In addition, ACA asks that the Commission provide an extended 30 day period in which to respond to good faith complaints filed against them. ACA argues that these procedural protections should apply not just to cable companies that serve 400,000 or fewer subscribers, but should also extend to ''all medium-sized, non-vertically integrated cable companies.'' ACA emphasizes that these protections are solely procedural and that the substantive good faith rules would be the same for MVPDs of all sizes. NAB and the Network Affiliates assert that ACA offers no support for a procedural distinction for medium and small cable operators and argue that the better course would be to grant individual requests for extensions of time on a case-by-case basis. Finally, ACA asks the Commission to clarify that it is not a violation of the good faith rules for a cable operator to decline to carry a broadcaster's multicast programming. NAB and the Network Affiliates assert that the Commission, in the *Good Faith Order,* found that proposals for carriage ''conditioned on carriage of any other programming, *such as a broadcaster's digital signals. * * *''* to be consistent with competitive marketplace considerations. These commenters argue that ACA provides no evidence to justify a departure from the Commission's finding. Indeed, NBC asks the Commission to clarify that, now and after completion of the digital transition, the good faith obligation requires MVPDs to negotiate for the entire free, over-the-air signal offered by a television station.

13. After reviewing the record in this proceeding, we adopt the tentative conclusion set forth in the *Notice* in order to implement the will of Congress as indicated in Section 207 and the legislative history. Accordingly, we will amend our existing rules to apply equally to both broadcasters and MVPDs. Sections 76.64(l) and 76.65 will be amended. Broadcasters will now be able to file a complaint against an MVPD alleging that such MVPD breached its duty to negotiate retransmission consent in good faith. Broadcasters and MVPDs must comply with the seven objective negotiation standards set forth in § 76.65(b)(1) as amended herein. In addition, MVPDs and broadcasters will now be equally subject to, and able to file, a complaint based on the totality of the circumstances.

14. We cannot agree with NCTA's assertion that, because of the differences between MVPDs and broadcasters, MVPDs should have the option of refusing outright to negotiate retransmission consent with any broadcaster within that MVPD's DMA. To agree with NCTA's assertion would be to render Section 207 a virtual nullity. Under NCTA's interpretation of Section 207, the good faith negotiation obligation is not triggered unless and until an MVPD has determined that retransmission of a broadcaster's signal is attractive. The Commission rejected similar arguments raised by broadcasters in implementing the good faith provisions of the SHVIA:

> [W]e do not interpret section 325(b)(3)(C) as largely hortatory as suggested by some commenters. As we stated in the Notice, Congress has signaled its intention to impose some heightened duty of negotiation on broadcasters in the retransmission consent process. In other words, Congress intended that the parties to retransmission consent have negotiation obligations greater than those under common law. * * * We believe that, by imposing the good faith obligation, Congress intended that the Commission develop and enforce a process that ensures that broadcasters and MVPDs meet to negotiate retransmission consent and that such negotiations are conducted in an atmosphere of honesty, purpose and clarity of process; *see Good Faith Order,* 15 FCC Rcd at 5455.

This ''heightened duty of negotiation'' has now been imposed by Congress on MVPDs. In drafting Section 207, Congress was fully aware of the Commission's implementation of the SHVIA good faith provision; *see Lorillard* v. *Pons,* 434 U.S. 575, 580–81 (1978) (''Congress is presumed to be aware of an administrative or judicial interpretation of a statute and to adopt that interpretation when it re-enacts a statute without change. So too, where, as here, Congress adopts a new law incorporating sections of a prior law, Congress normally can be presumed to have had knowledge of the interpretation given to the incorporated law, at least insofar as it affects the new statute.'') (citations omitted); *Bragdon* v. *Abbott,* 524 U.S. 624, 645 (1998) (same).

Armed with this knowledge, Congress crafted the reciprocal bargaining provision to mirror the obligation imposed by the SHVIA and the House Report stated that it was intended to be ''analogous'' to the SHVIA good faith obligation; *see* House Report at 19. We believe that if Congress had intended that this duty apply to MVPDs only when they were affirmatively interested in a prospective carriage arrangement, it would have so indicated in the statute or legislative history. Of course, the reciprocal bargaining obligation would be largely unnecessary if it were limited in this manner. Moreover, we do not believe that the obligations imposed herein will unduly burden MVPDs. First, the good faith obligation merely requires that MVPDs comply with the per se negotiating standards of § 76.65(b)(1) and refrain from insisting on rates, terms and conditions that are inconsistent with competitive marketplace considerations. Second, as discussed below, because we conclude that negotiations involving truly distant broadcasters and MVPDs and negotiations for which a broadcaster is contractually precluded from reaching consent may be truncated, MVPDs and broadcasters alike will not be required to engage in an unending procession of extended negotiations. Finally, provided that a party to a reciprocal bargaining negotiation complies with the requirements of the Commission's rules, failure to reach agreement would not violate either § 325(b)(3)(C) or § 76.65 of the Commission's rules. Accordingly, NCTA's argument that the reciprocal bargaining obligation will lead to another form of must carry is incorrect.

15. With regard to the totality of the circumstances test, we agree with EchoStar that MVPDs and broadcasters occupy different positions when negotiating retransmission consent and that the Commission should recognize this distinction when applying the totality of the circumstances test and in determining whether specific terms and conditions are consistent with competitive marketplace considerations. The Commission must always take into account the relative bargaining positions of the parties when examining the totality of the circumstances for a failure to negotiate in good faith. For example, a negotiating proposal put forth by a small cable operator might be found consistent with competitive marketplace considerations, whereas the same proposal put forth by the nation's largest MVPD might not. We also agree that identifying additional negotiating proposals that can be considered to reflect a failure to negotiate in good faith under the totality of the circumstances test should be done on a case-by-case basis. Finally, we clarify that tying is not consistent with competitive marketplace considerations if it would violate the antitrust laws; *see Good Faith Order,* 15 FCC Rcd at 5470 (''Conduct that is violative of national policies favoring competition—that is, for example, intended to gain or sustain a monopoly, is an agreement not to compete or fix prices, or involves the exercise of market power in one market in order to foreclose competitors from participation in another market—is not within the competitive marketplace considerations standard included in the statute.'').

16. We decline to establish special procedures for medium and small cable operators as requested by ACA. We agree with NAB and the Network Affiliates that ACA has failed to justify different procedural treatment for smaller cable operators. We fail to see what benefit the 30 day pre-complaint notice would have for these operators, particularly in instances where a retransmission consent agreement will imminently expire with the attendant loss of the broadcaster's signal. Because the Commission concluded in the *Good Faith Order* that MVPDs cannot continue to carry a broadcaster's signal after the existing consent expires even if a complaint is pending with the Commission, it benefits both broadcasters and MVPDs alike that the Commission decline to institute a procedural delay that would preclude the filing of a good faith complaint as soon as possible after the alleged violation; *see Good Faith Order,* 15 FCC Rcd at 5471–2. Accordingly, we believe that the more prudent course is to entertain individual requests for extensions of time on a case-by-case basis through which MVPDs and broadcasters, large and small, can establish that the existing pleading cycle set forth in § 76.7 of the Commission's rules is inadequate to allow that party to present an effective defense to a good faith complaint.

17. ACA requested that the Commission clarify that it is not a violation of the good faith rules for a cable operator to decline to carry a broadcaster's multicast programming. Conversely, NBC asks that the Commission determine that now, and after completion of the digital transition, the good faith obligation requires MVPDs to negotiate for the entire free, over-the-air signal offered by a television station. The Commission stated numerous times in the *Good Faith Order* that ''proposals for carriage conditioned on carriage of any other programming such as a broadcaster's digital signals'' are presumptively consistent with competitive marketplace considerations and the good faith negotiation requirement *see Good Faith Order,* 15 FCC Rcd at 5469. As the Commission stated:

> We do not find anything to suggest that, for example, requesting an MVPD to carry * * * digital broadcast signals is impermissible or other than a competitive marketplace consideration. * * * After passage of the 1992 Cable Act, Congress left negotiation of retransmission consent to the give and take of the competitive marketplace. In SHVIA, absent conduct that is violative of national policies favoring competition, we believe Congress intended this same give and take to govern retransmission consent. In addition, *we point out that these are bargaining proposals which an MVPD is free to accept, reject or counter with a proposal of its own; see Good Faith Order,* 15 FCC Rcd at 5469–70.

Whether an MVPD carries a broadcaster's entire free, over-the-air signal, be it high definition or multicast, is a matter to be determined through the retransmission consent negotiation process. The reciprocal bargaining obligation neither requires nor prohibits the carriage of a broadcaster's entire free signal. If it is important for a broadcaster to obtain full carriage of its digital signal, the broadcaster must be willing to accommodate the reasonable requests of an MVPD in order to secure such carriage. If it is important for an MVPD to carry part, but not all, of a broadcaster's digital signal it likewise must negotiate in good faith. In each instance, either party must be willing to forgo carriage if agreement is not reached after negotiating in accordance with the rules established herein.

B. The Reciprocal Bargaining Obligation and Entities Located in Different DMAs

18. In the *Notice*, the Commission noted that the original SHVIA good faith provision by its terms applied to ''television broadcast stations.'' Similarly, the SHVERA good faith provision applies to ''multichannel video programming distributors.'' The Commission sought comment whether, under the statute, the good faith negotiating standards may be any different for carriage of significantly viewed television broadcast stations outside of their DMA. Significantly viewed television broadcast stations do not have carriage rights outside of their DMA and carriage of their signals by out-of-market MVPDs is permissive. The *Notice* asked whether the same good faith negotiation standard should apply to broadcasters and MVPDs regardless of the DMA in which they reside, or whether the good faith retransmission

consent negotiation obligation should apply only to MVPDs and broadcasters located in the same DMA. As discussed below, we do not interpret section 325(b)(3)(C) to limit the geographic scope of the reciprocal bargaining obligation in retransmission consent negotiations. At the same time, we conclude that the nature of this obligation may vary according to where the MVPD and the broadcaster are located. With regard to significantly-viewed and in-market signals, we believe that the obligation should be essentially the same. With regard to more distant signals, the obligation applies, but distance is likely to be a critical factor in determining compliance under the totality of circumstances test.

19. The Network Affiliates, NAB, and NBC assert that the good faith bargaining obligation should not apply to negotiations for consent to retransmit broadcast signals outside of a television station's market. The Network Affiliates argue that:

> Indeed, SHVERA itself, in enacting new § 340, the significantly viewed provision, expressly provides (1) that ''[c]arriage of a signal under this section is not mandatory'' by a satellite carrier and (2) that the ''eligibility of the signal of a station to be carried under this section does not affect any right of the licensee of such station to grant (or withhold) retransmission consent under section 325(b)(1).''

The Network Affiliates stress that, in granting significantly viewed broadcasters the right to withhold retransmission consent, the SHVERA ''specifically references section 325(b)(1), the statutory retransmission consent provision, not section 325(b)(3)(C), the statutory good faith bargaining provision.''

20. NBC argues that, in adopting the SHVIA, Congress expressly intended to protect the property rights of program providers as well as the market-based outcomes of private negotiations between program providers and local broadcasters. Citing the legislative history of SHVIA, NBC asserts that Congress was guided by three principles: (1) The desire to promote competition in the marketplace for MVPD programming to reduce costs to subscribers; (2) ''the importance of protecting and fostering the system of television networks as they relate to the concept of localism;'' and (3) ''perhaps most importantly'' the need to act narrowly to protect the ''exclusive property rights granted by the Copyright Act to copyright holders'' and ''minimize the effects of government intrusion on the broader market in which the affected property rights and industries operate.'' NBC maintains that neither Congress nor the Commission suggested that the good faith requirement should be read to override the private property rights of networks, syndicators or other program providers and permit a distribution outlet, either broadcaster or cable operator, to consent to further redistribution of programming that the outlet does not own. NBC concedes that under the good faith requirements, a station cannot refuse to negotiate with an MVPD located in the same DMA regarding retransmission consent. Similarly, argues NBC, a station cannot enter into an agreement with an MVPD that prohibits the station from entering into retransmission consent with another MVPD. Neither of these concepts, however, prevents a station from refusing to grant out-of-market retransmission consent with respect to programming for which it does not hold extra-territorial rights. NBC also argues that Congress has consistently, both in the 1992 Cable Act and the SHVIA, protected the rights afforded by programming providers to local stations against distant stations; *see* S. Rep. No. 102–92, at 38, 106 Stat. 1133, 1171 (1991). The legislative history to the 1992 Cable Act provides that ''the Committee has relied on the protections which are afforded local stations by the FCC's network nonduplication and syndicated exclusivity rules. Amendments or deletions of those rules in a manner that would allow distant stations to be substituted on cable systems for carriage [of] local stations carrying the same programming would, in the Committee's view, be inconsistent with the regulatory structure created in [the 1992 Cable Act];'' *see also* SHVIA Conference Report at 92. The legislative history of the SHVIA states that ''the broadcast television market has developed in such a way that copyright licensing practices in this area take into account the national network structure, which grants exclusive territorial rights to programming in a local market to local stations either directly or through affiliation agreements.'' The SHVIA Conference Report went on to state that ''allowing the importation of distant or out-of-market network stations in derogation of the local stations' exclusive right—bought and paid for in market-negotiated arrangements—to show the works in question undermines those market arrangements.'' Accordingly, Congress structured the compulsory copyright license in SHVIA ''to hew as closely to those arrangements as possible.'' The Network Affiliates note that this concern is carried through in the legislative history of the SHVERA. The SHVERA House Report provides that ''[w]here a satellite provider can retransmit a local station's exclusive network programming but chooses to substitute identical programming from a distant network affiliate of the same network instead, the satellite carrier undermines the value of the license negotiated by the local broadcast station as well as the continued viability of the network-local affiliate relationship;'' *see* House Report at 11. NBC also cites numerous points in the *Good Faith Order* in which the Commission discussed the ''local'' nature of the good faith negotiation obligation.

21. Several commenters argue that the reciprocal bargaining obligation should be the same regardless of whether or not the entities are located in the same DMA, or at a minimum, extended to those areas in which a station is significantly viewed. EchoStar argues that ''[i]n the absence of specific limiting language, the good faith standards established by the Commission under section 325(b)(3)(C) apply to all cases where retransmission consent is required.'' As support for this conclusion, EchoStar, and other commenters, cite the Media Bureau's decision in *Monroe, Georgia Water Light and Gas Commission* v. *Morris Network, Inc.*, in which the Media Bureau stated that ''[w]e caution broadcasters to be aware of existing contractual obligations that affect a television station's ability to negotiate retransmission consent in good faith. The statute appears to apply equally to stations and MVPDs in the same local market or different markets.'' The Network Affiliates argue that reliance on the Media Bureau's *Monroe* decision is misplaced because the statement quoted is no more than equivocal *dicta*.

22. DirecTV and EchoStar argue that the fact that out-of-market broadcasters have no carriage rights is inapposite because once an in-market broadcaster forgoes mandatory carriage, it too has no guaranteed carriage rights. DirecTV asserts that allowing significantly viewed broadcasters to refuse to negotiate with DBS operators where cable operators already distribute such programming would violate SHVERA's prohibition on exclusive retransmission consent agreements. ACA states that this situation is particularly problematic for its members, many of which serve rural communities on the edges of DMAs in which out-of-market signals from an adjoining DMA are considered ''local'' by subscribers.

23. EchoStar argues further that contractual provisions that restrict a

broadcaster's ability to negotiate retransmission consent in good faith (*e.g.*, certain network affiliation agreements) must be declared per se good faith violations by the Commission. Citing the *Good Faith Order*, EchoStar states that the Commission has already determined that ''[p]roposals that result from agreements not to compete or fix prices'' are presumed inconsistent with competitive marketplace considerations. EchoStar asserts that NBC's ''protection of property rights'' argument is flawed because it assumes that copyright holders have the ''unfettered right to control further redistribution of broadcast programming.'' EchoStar maintains that Congress limited copyright holders' absolute control over redistribution of broadcast programming when it created the cable and satellite compulsory licenses for retransmission of broadcast signals. NBC asserts that compulsory copyright licenses offer no refuge from territorial exclusivity because ''[t]hese limited statutory licenses provide an administratively convenient means to permit redistribution of proprietary television programming via cable and satellite, but only *after* the [cable or satellite provider] has received the express consent of the affected television station, subject to the terms of that station's existing programming agreements with regard to territorial exclusivity.'' EchoStar argues that contractual provisions that prevent the granting of retransmission consent to out-of-market MVPDs would thwart Congress's intent to make out-of-market stations available to MVPD subscribers through the compulsory licensing provisions of the Copyright Act. ACA agrees asserting that the plain language of section 325(b), the legislative history of SHVIA and the Commission's implementing regulations prohibit market exclusivity provisions in network affiliation agreements. The Network Affiliates counter that there is nothing in SHVERA or its legislative history to justify the sweeping effect that EchoStar desires—''to effectively nullify the territorial restrictions in programming agreements that serve to grant, and to limit, program exclusivity.''

24. EchoStar also contends that local broadcasters are beginning to demand that MVPDs contract away their right to import significantly viewed out-of-DMA stations as part of retransmission consent negotiations. The Network Affiliates defend this practice. Citing the *Good Faith Order*, the Network Affiliates state that the Commission found that it would be presumptively inconsistent with competitive marketplace considerations and the good faith negotiation requirement for a broadcast station to offer a proposal that ''specifically foreclose[s] carriage of other programming services by the MVPD that *do not substantially duplicate the proposing broadcaster's programming*.'' Thus, argue the Network Affiliates, broadcasters can offer proposals that foreclose the carriage of other programming services by an MVPD that substantially duplicate the local broadcast station's programming.

25. DirecTV advises the Commission to adopt an ''agree with one, negotiate with all'' rule that applies to negotiations for significantly viewed broadcast signals. Under this rule, both broadcasters and MVPDs are free to refuse outright to negotiate carriage of significantly viewed signals under certain conditions. Once a party has agreed to significantly viewed carriage with any other party, however, it must negotiate in good faith for carriage with all other similarly situated parties. DirecTV explains its proposal as follows:

> Any broadcaster would be free, if it wished, to categorically reject negotiations for carriage in out-of-market, significantly viewed areas—but only if it did so with respect to *all* MVPDs. Once a broadcaster granted consent for one MVPD to carry such signals, however, it would have to negotiate with all other MVPDs for such carriage, and such negotiations would have to comply with the Commission's good faith negotiation standard. * * * This rule would apply reciprocally to MVPDs. DirecTV would be free to decide, for example, that it will not carry New York stations in significantly viewed areas in the Hartford DMA and, having made that decision, would be free not to negotiate with New York stations regarding such carriage. If however, it were to carry one New York station in a Hartford significantly viewed area, it would have to negotiate [in good faith] with all [significantly viewed] New York stations seeking carriage in Hartford.* * *

Under either scenario, DirecTV asserts, the parties would not be required to reach agreement, but only to negotiate in good faith in accordance with the Commission's rules.

26. As noted above, the SHVIA good faith provision by its terms applied to ''television broadcast stations.'' Similarly, the SHVERA good faith provision applies to ''multichannel video programming distributors.'' Neither the text of the SHVIA or the SHVERA, nor their respective legislative histories, expressly delineate a territorial boundary of the good faith negotiation obligation. Some commenters argue that the reciprocal bargaining obligation attaches to negotiations between MVPDs and broadcasters that are significantly viewed outside of their DMA. Others assert that these obligations attach to any retransmission consent negotiation regardless of where the MVPD and the broadcaster are situated. For the reasons discussed below, we agree with the latter interpretation of section 325(b)(3)(C). Because we reach this conclusion, we need not examine DirecTV's ''agree with one, negotiate with all'' proposal.

27. The language adopted by Congress in section 325(b)(3)(C) of the SHVIA, as well the amendment adopted in the SHVERA, support the conclusion that the reciprocal bargaining obligation applies to all retransmission consent agreements. The text of the statute applies without qualification to ''television broadcast stations,'' ''multichannel video programming distributors'' and ''retransmission consent agreements;'' *see* 47 U.S.C. 325(b)(3)(C). Nor does the legislative history appear to contemplate a limitation on the reciprocal bargaining obligation such that it would apply to some, but not all, retransmission consent negotiations. Other than mandatory carriage pursuant to Section 614 and satellite carrier service to unserved households, all other lawful carriage of television broadcast stations is by retransmission consent. There is no statutory or regulatory distinction between in-market carriage and out-of-market carriage pursuant to retransmission consent. Here, we believe that the statute is clear on its face and we must give effect to its plain meaning; *see Chevron USA Inc.* v. *Natural Resources Defense Council, Inc.*, 467 U.S. 837, 842 (1984), *Qwest Corp.* v. *FCC*, 258 F.3d 1191, 1199 (10th Cir. 2001), *Bell Atlantic Tel. Cos.* v. *FCC*, 131 F.3d 1044, 1047 (DC Cir. 1997). Further, we believe that this is the best interpretation of the provision consistent with the SHVIA, the SHVERA and their respective legislative histories. This interpretation avoids the incongruous result of satellite carriers seeking to carry a broadcaster in significantly viewed communities facing outright refusal to negotiate carriage by such broadcaster even though cable operators in the same communities are actually carrying such programming through retransmission consent. In this regard, we agree with DirecTV that a contrary interpretation might conflict with the prohibition on exclusive retransmission consent agreements contained in section 325(b)(3)(C); *see* 47 U.S.C. 325(b)(3)(C). We fail to see how

an interpretation of section 325(b)(3)(C) that permits this result implements Congress's direction that ''MVPD good-faith obligations * * * be analogous to those that apply to broadcasters.'' Accordingly, we conclude that the reciprocal bargaining obligation of section 325(b)(3)(C) applies to the negotiation of all retransmission consent.

28. Some commenters argue that a separate provision of the SHVERA, new Section 340 of the Communications Act, indicates that the reciprocal bargaining provision applies solely to in-market retransmission consent negotiations. We disagree. Section 340(d) of the Communications Act, as enacted in the SHVERA, discusses the carriage rights of satellite carriers with respect to significantly viewed broadcast stations and states that ''[t]he eligibility of the signal of a station to be carried under this section does not affect any right of the licensee of such station to grant (or withhold) retransmission consent under section 325(b)(1); *see* 47 U.S.C. 340(d)(2). The legislative history of the provision provides that:

> Cable operators are under no obligation to carry in a local market a distant significantly viewed signal, and the Committee intends satellite carriage of such a distant signal in a local market to be similarly voluntary. * * * Cable operators must obtain retransmission consent to carry distant significantly viewed signals into a local market and the committee intends the same obligation to apply to satellite.

We interpret this provision, and its legislative history, merely to acknowledge that mandatory carriage operates only with regard to broadcasters and cable operators and satellite carriers operating in the same DMA. As discussed above, retransmission consent carriage of significantly viewed signals is permissive. We do not interpret this provision as limiting the geographic scope of section 325(b)(3)(C). Nor do we interpret as conflicting with this reading the fact that Congress, in section 340(d), referenced section 325(b)(1) of the Communications Act, rather than section 325(B)(3)(C), the reciprocal bargaining obligation; *see* 47 U.S.C. 325(b)(1). Section 325(b)(1) is the statutory provision that gives rise to the right of retransmission consent. It originates in the 1992 Cable Act and predates both the SHVIA and the SHVERA. The right of in-market broadcasters and out-of-market broadcasters alike to require retransmission consent arises from section 325(b)(1). The reciprocal bargaining provision of section 325(b)(3)(C) is an obligation that Congress deliberately overlay upon the substantive retransmission consent right created by section 325(b)(1).

29. We emphasize that, although the reciprocal bargaining obligation applies without geographic limitation, that does not mean it will apply exactly the same way in all negotiations. Rather, we conclude that section 325(b)(3)(C) and the inherent nature of a good faith obligation permit the Commission to account for the distinction between in-market and out-of-market signals in determining compliance under the totality of the circumstances test. In other words, the determination of what conduct constitutes a breach of the duty of good faith is necessarily contextual. Congress created the mandatory carriage/retransmission consent framework as part of the 1992 Cable Act; *see Implementation of the Cable Television Consumer Protection and Competition Act of 1992: Broadcast Signal Carriage Issues*, 8 FCC Rcd 2965 (1993). Through this framework, a broadcaster has the option to elect mandatory carriage and forgo compensation for carriage of its signal or pursue retransmission consent and risk the failure to agree and non-carriage; *see Implementation of the Cable Television Consumer Protection and Competition Act of 1992: Broadcast Signal Carriage Issues*, 8 FCC Rcd 2965 (1993). The mandatory carriage/retransmission consent option applies only to carriage within a broadcaster's DMA. In contrast, the carriage of significantly viewed signals outside of a broadcaster's DMA has always been, and continues to be under the SHVERA, solely at the agreement of the broadcaster and the out-of-market MVPD. Notwithstanding the uncertain nature of retransmission consent, we believe that broadcasters generally have a greater expectation of carriage within their local market. Notwithstanding this expectation, it is also possible, subject to certain limitations (such as the invocation of network nonduplication and syndicated exclusivity rights of broadcasters in the MVPD's DMA), that a cable operator located in the New York DMA could through retransmission consent carry the signal of a broadcaster located in the San Diego DMA. We believe that a reasonable application of the statutory good faith standard permits variations in parties' reciprocal bargaining obligations in two such distinct situations.

30. With regard to significantly viewed signals and in-market signals, we believe that the reciprocal bargaining obligation should be essentially the same. In 1972, the Commission adopted the concept of significantly viewed signals to differentiate between out-of-market televisions stations ''that have sufficient audience to be considered local and those that do not;'' *see Cable Television Report and Order,* 36 FCC 2d 143, 174 (1972). The copyright provisions that apply to cable systems have recognized the Commission's designation of stations as significantly viewed and treated them, for copyright purposes, as ''local,'' and therefore subject to reduced copyright payment obligations; *see* 17 U.S.C. 111(a), (c) and (f). In the SHVERA, Congress extended to satellite carriers the right, already held by cable operators, to provide through retransmission consent out-of-market signals to the communities in which they are significantly viewed; *see* 47 U.S.C. 340. Given the proximity of broadcasters to the communities in which they are significantly viewed, we can discern no reason to differentiate these signals from in-market signals for reciprocal bargaining purposes. In either situation, failure to reach retransmission consent is not a violation of the reciprocal bargaining obligation provided the parties comply with our rules. Because satellite carriers' retransmission consent rights apply only to in-market and significantly viewed signals, their reciprocal bargaining obligation applies only to retransmission of these signals; *see* 47 U.S.C. 338, 339 & 340.

31. The situation for cable operators beyond in-market and significantly viewed signals, however, is more complex. As discussed above, different statutory provisions govern cable operators and permit pursuant to retransmission consent the carriage of distant signals originating far beyond the boundaries of the cable operator's DMA. In these cases, although the reciprocal bargaining obligation still applies, we believe that the Commission should apply a different calculus in evaluating complaints involving cable operators and distant broadcasters. As with all retransmission consent negotiations, the per se negotiating standards set forth in § 76.65 will still apply to such negotiations as will the requirement that both parties to the negotiation refrain from insisting on terms that are not consistent with competitive marketplace considerations. The main difference in these distant reciprocal bargaining negotiations should lie in either party's ability, after evaluating the prospect of distant carriage and giving full consideration to the proposals of the party requesting carriage, to reject the proposal and terminate further negotiation. We emphasize that until such negotiations

are formally terminated, either orally or, preferably, in writing, the reciprocal bargaining obligation must be observed.

32. We believe that, in many cases, distance will play a critical factor in determining whether a party complied with its reciprocal bargaining obligation. In the example discussed above, if a San Diego broadcaster offered retransmission consent to a New York cable operator in exchange for a monthly consideration per subscriber, the cable operator after permitting the broadcaster to fully present its proposal and giving such proposal due consideration, would not violate its reciprocal bargaining obligation by concluding that the distance between the broadcaster and cable operator is simply too great to make retransmission consent worthwhile to the cable operator. After so advising the broadcaster, the cable operator would have satisfied its reciprocal bargaining obligation. As the distances involved lessen, we would expect the party requested to engage in retransmission consent negotiations to be more willing to engage in extended negotiations to comply with the reciprocal bargaining requirement. In addressing reciprocal bargaining complaints involving distant carriage negotiations, the Commission will evaluate whether the party against whom the complaint is filed complied with the per se standards during the course of the negotiations. The length of the negotiation, the decision to terminate further negotiation and the distance between the broadcaster and the cable operator will be considered as part of the totality of the circumstances test. We believe that further guidance on this issue is best provided by the Commission through the resolution of actual disputes. At bottom, we do not believe that the reciprocal bargaining obligation should be used to engage distant entities and require protracted good faith negotiation for signals that have no logical or local relation to the MVPD's service area.

33. Certain commenters ask that the Commission declare a per se violation of a broadcaster's reciprocal bargaining obligation a contractual provision, such as one contained in a network affiliation agreement, that restricts a broadcaster's ability to negotiate retransmission consent in good faith. These commenters assert that some networks, through their affiliation agreements, restrict a broadcaster's ability to grant retransmission consent outside of a specified geographic area, often the broadcaster's DMA. NBC and the Network Affiliates assert that Congress has consistently acknowledged and preserved the network-affiliate system. As the record indicates, Congress in the 1992 Cable Act, the SHVIA and the SHVERA stressed the importance of this system. We agree with NBC and the Network Affiliates that neither the text nor the legislative history of the SHVIA or the SHVERA indicate a congressional intent to restrict the rights of networks and their affiliates through the good faith or reciprocal bargaining obligation to agree to limit an affiliate's right to redistribute affiliated programming. This is reflected in the *Notice* in this proceeding which did not raise for comment the issue of the reciprocal bargaining obligation and its relation to the preclusion of retransmission consent through network-affiliate agreements. Because we perceive no intent on the part of Congress that the reciprocal bargaining obligation interfere with the network-affiliate relationship or to preclude specific terms contained in network-affiliate agreements, we decline to take action on these issues in this proceeding. We note that the issue of retransmission consent generally, and the impact of network affiliation agreements on retransmission consent specifically, is more squarely raised in a petition for rulemaking pending before the Commission; *see Petition for Rulemaking to Amend 47 CFR 76.64, 76.93, and 76.103: Retransmission Consent, Network Non-Duplication, and Syndicated Exclusivity,* RM 11203 (filed March 2, 2005). In addition section 208 of the SHVERA requires the Commission to complete an inquiry and report to Congress regarding how the retransmission consent, network non-duplication, syndicated exclusivity and sports blackout rules impact MVPD competition, including the ability of rural cable operators to compete with satellite carriers in providing digital broadcast signals. SHVERA, Public Law 108–447, section 208. The Commission is currently preparing this report. Even were we so inclined, we are concerned that the *Notice* in this proceeding may not have given interested parties appropriate notice that the Commission was contemplating action in this regard; *see* 5 U.S.C. 553(b)(1)–(3) (Administrative Procedure Act notice requirements), *Omnipoint Corp.* v. *FCC,* 78 F.3d 620, 631 (D.C. Cir. 1996) (''a final rule is not a logical outgrowth of a proposed rule 'when the changes are so major that the original notice did not adequately frame the subjects for discussion.' ''), quoting *Connecticut Light and Power Co.* v. *NRC,* 673 F.2d 525, 533 (DC Cir.), *cert. denied,* 459 U.S. 835 (1982). However, because we decline to take action for the reasons described above, we need not reach the issue of the sufficiency of our *Notice.*

34. Nor do we agree that restrictions in existing network-affiliate agreements are prohibited by § 76.65 of the Commission's rules. Section 76.65 provides that it is a per se violation of the good faith negotiation provision for a television broadcast station to execute ''an agreement with any party, a term or condition of which, requires that such television broadcast station not enter into a retransmission consent agreement with any multichannel video programming distributor. * * *;'' *see* 47 CFR 76.65(b)(1)(vi). As is evidenced by the discussion in the *Good Faith Order,* that provision is intended to cover collusion between a broadcaster and an MVPD requiring non-carriage by another MVPD, ''[f]or example, Broadcaster A is prohibited from agreeing with MVPD B that it will not reach retransmission consent with MVPD C;'' *see Good Faith Order,* 15 FCC Rcd at 5464. In adopting § 76.65(b)(1)(iv), the Commission did not intend to affect the ability of a network affiliate agreement to limit redistribution of network programming; *see Monroe,* 19 FCC Rcd at 13997 n.24 (''To the extent, however, that Monroe Utilities is arguing that the existence of an underlying agreement between Morris and NBC is itself a violation of the good faith negotiation requirement, we agree with Morris that the good faith requirement applies to negotiations between MVPDs and broadcast stations, and not between a network and an affiliate.'').

35. The question arises, however, what is a broadcaster's reciprocal bargaining obligation with regard to MVPDs which it is precluded from granting retransmission consent by its network affiliation agreement. As discussed above, the reciprocal bargaining obligation imposes a ''heightened duty of negotiation'' on broadcasters and MVPDs involved in retransmission consent negotiations. We believe that it is incumbent on broadcasters subject to such contractual limitations that have been engaged by an out-of-market MVPD to negotiate retransmission consent of its signal to at least inquire with its network whether the network would waive the limitation with regard to the MVPD in question. We believe that in many situations retransmission of the broadcaster's signal by a distant MVPD would be deemed advantageous to the network as well as the broadcaster and MVPD. In such situations, we believe that a network that has otherwise restricted a broadcaster's redistribution rights might be amenable to a limited waiver of the restriction.

36. With respect to EchoStar's contention that local broadcasters are beginning to demand that MVPDs contract away their right to import significantly viewed out-of-DMA stations as part of retransmission consent negotiations, we reiterate our conclusion in the *Good Faith Order* that ''[p]roposals that specifically foreclose carriage of other programming services by the MVPD that do not substantially duplicate the proposing broadcaster's programming'' are ''not consistent with competitive marketplace considerations and the good faith negotiation requirement. * * *;'' *see Good Faith Order,* 15 FCC Rcd at 5470. If complaints are filed on this issue, we will evaluate as part of the totality of the circumstances whether or not the programming sought to be foreclosed actually substantially duplicates the programming of the broadcaster negotiating retransmission consent.

IV. Procedural Matters

A. Congressional Review Act

37. The Commission will send a copy of this *Order* in a report to be sent to Congress and the Government Accountability Office pursuant to the Congressional Review Act, *see* 5 U.S.C. 801(a)(1)(A).

V. Ordering Clauses

38. Accordingly, *it is ordered* that pursuant to Section 207 of the Satellite Home Viewer Extension and Reauthorization Act of 2004, and sections 1, 4(i) and (j), and 325 of the Communications Act of 1934, as amended, 47 U.S.C. 151, 154(i) and (j), and 325, the Commission's rules are hereby amended.

39. *It is further ordered* that the rule amendments will become effective 30 days after publication in the **Federal Register.**

40. *It is further ordered* that the Reference Information Center, Consumer and Governmental Affairs Bureau, shall send a copy of this Report and Order, including the Final Regulatory Flexibility Analysis, to the Chief Counsel for Advocacy of the Small Business Administration.

List of Subjects in 47 CFR Part 76

Cable television, Television.

Federal Communications Commission.

Marlene H. Dortch,

Secretary.

Proposed Rules

■ For the reasons discussed in the preamble, the Federal Communications Commission amends 47 CFR part 76 as follows:

PART 76—MULTICHANNEL VIDEO AND CABLE TELEVISION SERVICE

■ 1. The authority citation for 47 CFR part 76 continues to read as follows:

Authority: 47 U.S.C. 151, 152, 153, 154, 301, 302, 302a, 303, 303a, 307, 308, 309, 312, 315, 317, 325, 338, 339, 340, 503, 521, 522, 531, 532, 533, 534, 535, 536, 537, 543, 544, 544a, 545, 548, 549, 552, 554, 556, 558, 560, 561, 571, 572 and 573.

■ 2. Section 76.64(l) is revised to read as follows:

§ 76.64 Retransmission consent.

* * * * *

(l) Exclusive retransmission consent agreements are prohibited. No television broadcast station shall make or negotiate any agreement with one multichannel video programming distributor for carriage to the exclusion of other multichannel video programming distributors. This paragraph shall terminate at midnight on December 31, 2009.

* * * * *

■ 3. Section 76.65 is revised to read as follows:

§ 76.65 Good faith and exclusive retransmission consent complaints.

(a) *Duty to negotiate in good faith.* Television broadcast stations and multichannel video programming distributors shall negotiate in good faith the terms and conditions of retransmission consent agreements to fulfill the duties established by section 325(b)(3)(C) of the Act; provided, however, that it shall not be a failure to negotiate in good faith if:

(1) The television broadcast station proposes or enters into retransmission consent agreements containing different terms and conditions, including price terms, with different multichannel video programming distributors if such different terms and conditions are based on competitive marketplace considerations; or

(2) The multichannel video programming distributor enters into retransmission consent agreements containing different terms and conditions, including price terms, with different broadcast stations if such different terms and conditions are based on competitive marketplace considerations. If a television broadcast station or multichannel video programming distributor negotiates in accordance with the rules and procedures set forth in this section, failure to reach an agreement is not an indication of a failure to negotiate in good faith.

(b) *Good faith negotiation.*

(1) *Standards.* The following actions or practices violate a broadcast television station's or multichannel video programming distributor's (the ''Negotiating Entity'') duty to negotiate retransmission consent agreements in good faith:

(i) Refusal by a Negotiating Entity to negotiate retransmission consent;

(ii) Refusal by a Negotiating Entity to designate a representative with authority to make binding representations on retransmission consent;

(iii) Refusal by a Negotiating Entity to meet and negotiate retransmission consent at reasonable times and locations, or acting in a manner that unreasonably delays retransmission consent negotiations;

(iv) Refusal by a Negotiating Entity to put forth more than a single, unilateral proposal;

(v) Failure of a Negotiating Entity to respond to a retransmission consent proposal of the other party, including the reasons for the rejection of any such proposal;

(vi) Execution by a Negotiating Entity of an agreement with any party, a term or condition of which, requires that such Negotiating Entity not enter into a retransmission consent agreement with any other television broadcast station or multichannel video programming distributor; and

(vii) Refusal by a Negotiating Entity to execute a written retransmission consent agreement that sets forth the full understanding of the television broadcast station and the multichannel video programming distributor.

(2) *Totality of the circumstances.* In addition to the standards set forth in § 76.65(b)(1), a Negotiating Entity may demonstrate, based on the totality of the circumstances of a particular retransmission consent negotiation, that a television broadcast station or multichannel video programming distributor breached its duty to negotiate in good faith as set forth in § 76.65(a).

(c) *Good faith negotiation and exclusivity complaints.* Any television broadcast station or multichannel video programming distributor aggrieved by conduct that it believes constitutes a violation of the regulations set forth in this section or § 76.64(l) may commence an adjudicatory proceeding at the Commission to obtain enforcement of the rules through the filing of a complaint. The complaint shall be filed and responded to in accordance with the procedures specified in § 76.7.

(d) *Burden of proof.* In any complaint proceeding brought under this section, the burden of proof as to the existence

of a violation shall be on the complainant.

(e) *Time limit on filing of complaints.* Any complaint filed pursuant to this subsection must be filed within one year of the date on which one of the following events occurs:

(1) A complainant enters into a retransmission consent agreement with a television broadcast station or multichannel video programming distributor that the complainant alleges to violate one or more of the rules contained in this subpart; or

(2) A television broadcast station or multichannel video programming distributor engages in retransmission consent negotiations with a complainant that the complainant alleges to violate one or more of the rules contained in this subpart, and such negotiation is unrelated to any existing contract between the complainant and the television broadcast station or multichannel video programming distributor; or

(3) The complainant has notified the television broadcast station or multichannel video programming distributor that it intends to file a complaint with the Commission based on a request to negotiate retransmission consent that has been denied, unreasonably delayed, or unacknowledged in violation of one or more of the rules contained in this subpart.

(f) *Termination of rules.* This section shall terminate at midnight on December 31, 2009.

[FR Doc. 05–13739 Filed 7–12–05; 8:45 am]

BILLING CODE 6712–01–P

DEPARTMENT OF COMMERCE

National Oceanic and Atmospheric Administration

50 CFR Part 600

[Docket No. 041029298–5168–03; I.D. 052004A]

RIN 0648–AS38

Magnuson-Stevens Act Provisions; Fishing Capacity Reduction Program; Pacific Coast Groundfish Fishery; California, Washington, and Oregon Fisheries for Coastal Dungeness Crab and Pink Shrimp; Industry Fee System for Fishing Capacity Reduction Loan

AGENCY: National Marine Fisheries Service (NMFS), NationalOceanic and Atmospheric Administration (NOAA), Commerce.

ACTION: Final rule.

SUMMARY: NMFS establishes regulations to implement an industry fee system for repaying a $35,662,471 Federal loan. The loan financed most of the cost of a fishing capacity reduction program in the Pacific Coast groundfish fishery. The industry fee system imposes fees on the value of future groundfish landed in the trawl portion (excluding whiting catcher-processors) of the Pacific Coast groundfish fishery. It also imposes fees on coastal Dungeness crab and pink shrimp landed in the California, Washington, and Oregon fisheries for coastal Dungeness crab and pink shrimp. This action's intent is to implement the industry fee system.

DATES: This final rule is effective August 12, 2005.

ADDRESSES: Copies of the Environmental Assessment, Regulatory Impact Review (EA/RIR) and Final Regulatory Flexibility Analysis (FRFA) for the fee collection system may be obtained from Michael L. Grable, Chief, Financial Services Division, National Marine Fisheries Service, 1315 East-West Highway, Silver Spring, MD 20910–3282.

Written comments involving the burden-hour estimates or other aspects of the collection-of-information requirements contained in this final rule should be submitted in writing to Michael L. Grable, at the above address, and to David Rostker, Office of Management and Budget (OMB), by e-mail at *David_Rostker@omb.eop.gov* or by fax to 202–395–7285.

FOR FURTHER INFORMATION CONTACT: Michael L. Grable, (301) 713–2390.

SUPPLEMENTARY INFORMATION:

I. Background

Section 312(b)-(e) of the Magnuson-Stevens Fishery Conservation and Management Act (16 U.S.C. 1861a(b) through (e)) (Magnuson-Stevens Act) generally authorized fishing capacity reduction programs. In particular, Magnuson-Stevens Act section 312(d) authorized industry fee systems for repaying fishing capacity reduction loans which finance program costs.

Subpart L of 50 CFR part 600 contains the framework regulations (framework) generally implementing Magnuson-Stevens Act sections 312(b)-(e).

Sections 1111 and 1112 of the Merchant Marine Act, 1936 (46 App. U.S.C. 1279f and 1279g), generally authorized fishing capacity reduction loans.

Section 212 of Division B, Title II, of Public Law 108–7 (section 212) specifically authorized a $46 million program (groundfish program) for that portion of the limited entry trawl fishery under the Pacific Coast Groundfish Fishery Management Plan whose permits, excluding those registered to whiting catcher-processors, were endorsed for trawl gear operation (reduction fishery). Section 212 also authorized a fee system for repaying the reduction loan partially financing the groundfish program's cost. The fee system includes both the reduction fishery and the fisheries for California, Washington, and Oregon coastal Dungeness crab and pink shrimp (fee-share fisheries).

Section 501(c) of Division N, Title V, of Public Law 108–7 (section 501(c)) appropriated $10 million to partially fund the groundfish program's cost.

Public Law 107–206 authorized a reduction loan with a ceiling of $36 million to finance the groundfish program's cost.

Section 212 required NMFS to implement the groundfish program by a public notice in the **Federal Register**. NMFS published the groundfish program's initial public notice on May 28, 2003 (68 FR 31653) and final notice on July 18, 2003 (68 FR 42613).

The groundfish program's maximum cost was $46 million, of which an appropriation funded $10 million and a reduction loan financed $36 million. Voluntary participants in the groundfish program relinquished, among other things, their fishing permits in the reduction fishery, their fishing permits or licenses in the fee-share fisheries, their fishing histories in both the reduction and fee-share fisheries, and their vessels' worldwide fishing privileges. These relinquishments were in return for reduction payments whose amounts the participants' reduction bids determined.

On July 18, 2003, NMFS invited reduction bids from the reduction fishery's permit holders. The bidding period opened on August 4, 2003, and closed on August 29, 2003. NMFS scored each bid's amount against the bidder's past ex-vessel revenues and, in a reverse auction, accepted the bids whose amounts were the lowest percentages of the revenues. This created reduction contracts whose performance was subject only to a successful referendum about the fee system.

Bid offers totaled $59,786,471. NMFS accepted bids totaling $45,662,471. The next lowest scoring bid would have exceeded the groundfish program's maximum cost. The accepted bids involved 91 fishing vessels as well as 239 fishing permits and licenses (91 in the reduction fishery, 121 in the fee-share fisheries, and 27 other Federal permits).

In accordance with the section 212 formula, NMFS allocated portions of the $35,662,471 reduction loan amount to the reduction fishery and to each of the six fee share fisheries, as follows:

1. Reduction fishery, $28,428,719; and
2. Fee-share fisheries:

a. California coastal Dungeness crab fishery, $2,334,334;

b. California pink shrimp fishery, $674,202;

c. Oregon coastal Dungeness crab fishery, $1,367,545;

d. Oregon pink shrimp fishery, $2,228,845;

e. Washington coastal Dungeness crab fishery, $369,426; and

f. Washington pink shrimp fishery, $259,400.

Each of these portions became reduction loan subamounts repayable by fees from each of the seven subamount fisheries.

NMFS next held a referendum on the fee system. The reduction contracts would have become void unless the majority of votes cast in the referendum approved the fee system. On September 30, 2003, NMFS mailed ballots to referendum voters in the reduction fishery and in each of the six fee-share fisheries. The voting period opened on October 15, 2003, and closed on October 29, 2003. NMFS received 1,105 responsive votes. In accordance with the section 212 formula, NMFS weighted the votes from each of the seven fisheries. Over 85 percent of the weighted votes approved the fee system. This successful referendum result removed the only condition precedent to reduction contract performance.

On November 4, 2003, NMFS published another **Federal Register** document (68 FR 62435) advising the public that NMFS would, beginning on December 4, 2003, tender the groundfish program's reduction payments to the 91 accepted bidders. On December 4, 2003, NMFS required all accepted bidders to permanently stop all further fishing with the reduction vessels and permits. Subsequently, NMFS:

1. Disbursed $45,662,471 in reduction payments to 91 accepted bidders;
2. Revoked the relinquished Federal permits;
3. Advised California, Oregon, and Washington about the relinquished state permits or licenses;
4. Arranged with the National Vessel Documentation Center for revocation of the reduction vessels' fishery trade endorsements; and
5. Notified the U.S. Maritime Administration to restrict placement of the reduction vessels under foreign registry or their operation under the authority of foreign countries.

On November 16, 2004, NMFS published a **Federal Register** document (69 FR 67100) proposing regulations to implement the groundfish program's industry fee system (proposal).

In response to public comment about the proposal, NMFS modified and published a second proposal on April 8, 2005, (**Federal Register** document (70 FR 17949)).

II. Summary of Comments and Responses

NMFS received four comments from organizations representing west coast fishing interests.

Comment 1: One comment regretted the proposal's failure to exercise a section 212 option under which the States of California, Oregon, and Washington would have ''collected'' the fees.

Response: NMFS continues to believe, for the reasons given in its response to public comment on the first proposal (70 FR 17950), that exercising the statutory option for the states to ''collect'' the fees is not feasible.

Comment 2: Three commenters believed reduction loan interest should not have accrued during the interim between reduction loan disbursement and implementation of fee payment and collection. This comment generally reasserts previous comments in this regard.

Response: Absent express conditions to the contrary, interest on loan principal always accrues from the date on which lenders disburse loan principal to borrowers. The reduction loan is a loan under Title XI of the Merchant Marine Act, 1936 (46 App. U.S.C. 1279f and 1279g). Title XI provides no authority for loans which are interest-free during any portion of their term. All direct Title XI loans are interest bearing for their full term.

All Title XI loans are subject to the Federal Credit Reform Act of 1990 (FCRA). The FCRA makes most Federal loan activities dependent on loan ceilings authorized in appropriation acts. Moreover, if the President's Office of Management and Budget estimates that any portion of a prospective loan ceiling cannot be collected, the FCRA requires appropriating the net present value of the uncollectible amount before the loan ceiling can be authorized. Under the FCRA, the uncollectible amount is the loan ceiling's ''cost''.

Loan ceilings with costs exceeding the appropriated cost are not authorized. Cost estimates involve all case inflows and cash outflows (including interest accruing on disbursed principal) over the terms of a ceiling's prospective loans. Because neither Title XI nor Magnuson-Stevens Act section 312(b)-(e) authorizes reduction loans which are interest-free during any portion of their terms, all reduction loan cost calculations required for FCRA compliance were based on a principal amount which accrues interest from the day of disbursement. Even if NMFS had the authority to do so (which it does not), forgoing a year or more worth of reduction loan interest accrual would be inconsistent with the reduction loan's FCRA conditions and would require the appropriation of any increase in FCRA cost resulting from the accrued interest foregone.

The reduction loan is a direct loan and, under the FCRA, Congress does not appropriate any portion of a direct loan ceiling other than the ceiling's cost. Consequently, before NMFS could disburse the reduction loan, NMFS borrowed the reduction loan's principal amount (less the cost) from the U.S. Treasury. NMFS must, like any other borrower, pay to the Treasury the interest expense which accrued on the Treasury loan's unpaid principal from the day on which Treasury disbursed the principal to NMFS. No portion of the Treasury loan's principal is interest-free to NMFS for any portion of the loan's term any more than any portion of the reduction loan's principal is interest-free to the groundfish program's fee payers (i.e., fish sellers) for any portion of the reduction loan's term. This is true despite NMFS having been unable for a year or more to make payments on the Treasury's loan due to the fact that NMFS has had no fee revenue with which to do so. When fee payment and collection begins, NMFS will be required to pay the interest accrued on the Treasury's loan during the elapsed time since the loan's disbursement to NMFS, just as NMFS will require the fish sellers to pay the interest accrued on the reduction loan during the same elapsed time.

Moreover, during this elapsed time the fee payers have had the use of the funds which they would otherwise have paid as reduction loan fees (as well as the benefit of the capacity reduction harvest efficiencies achieved by having expended the reduction loan's principal). There is no equitable reason why fee payers should not pay the past time value of these funds once this action allows fee payment and collection to begin.

NMFS will reschedule the principal amount which the fish sellers otherwise would have amortized during this elapsed time as a balloon payment at the end of the reduction loan's term. Although rescheduling does not forego any accrued interest, it does allow

applying more initial fee revenues to principal reduction because no part of fee revenues up to the balloon payment will be applied to the rescheduled principal's reduction. NMFS will, of course, not capitalize the interest which accrued on the rescheduled principal.

Moreover, should the majority of fee payers in any fee paying fishery whose fee rate is not already at the maximum rate of 5 percent wish at any time to more quickly amortize the principal balloon payment applicable to that fishery's reduction loan subamount, NMFS is willing to establish the balloon payment as a separate principal amount to be amortized concurrently with the rest of the reduction loan principal. But the principal amount will be amortized over a much shorter term consistent with the level of fee-rate increase which the majority of fee payers were contemporaneously willing to pay in order to amortize this portion of the principal more quickly and, thus, decrease future interest accruals.

Comment 3: One commenter reasserted it's previously stated belief that NMFS' Financial Services Division had verbally advised the commenter that reduction loan interest would not accrue during the interim between reduction loan disbursement and implementation of fee payment and collection.

Response: As noted in NMFS' previous response to this commenter's first assertion, the Financial Services Division neither advised nor had the authority to advise anyone that interest would not accrue during this or any other portion of the reduction loan's term. NMFS' Financial Services Division is fully aware both that it had no authority to act as this commenter alleges and of the FCRA and other consequences of doing so.

Comment 4: One commenter believed that proposed section 600.1102(k)(1) was unclear and might require fish buyers to maintain up to seven different accounts for depositing collected fee revenues.

Response: Section 600.1102(k)(1) does not require maintaining up to seven different accounts for this purpose. Instead, this section requires fish buyers to maintain only a single account for the purpose of depositing collected fees, with separate paperwork (for accounting purposes) tracking each such single deposit for the reduction fishery and for each of the six fee-share fisheries from which the fish buyer expects to collect fee-share fishery fees.

Comment 5: One commenter assumed that the proposal section 600.1102(k)(3) meant something other than NMFS receiving the required deposits of collected fees not later than the time stated.

Response: This assumption is wrong. NMFS must have received each fish seller's disbursement of collected fees not later than the 14th calendar day after the last day of each month. Each fee seller is responsible to take whatever action is required to accomplish this, and 2 weeks is not an unreasonably short time to do so. In addition to various U.S. postal and express delivery services, fish buyers will also be able to disburse collected fees to NMFS' lockbox by electronic wire transfer.

Comment 6: One commenter suggested replacing the term ''settlement sheet'' with the term ''fee collection report'' because the former term commonly refers to accountings which fish buyers provide to fish sellers, and this could cause potential confusion.

Response: NMFS agrees, and has replaced the term ''settlement sheet'' with the term ''fee collection report''.

Comment 7: One commenter recommended that fee payment and collection begin on September 1, 2005, because that is the beginning of a ''bi-monthly cumulative period for trawl groundfish fishery and prior to the starting date of the crab fishery.≥

Response: NMFS believes there should be as little further delay in paying and collecting fees as possible. Accordingly, NMFS will publish the required fee notice as soon as practicable after publishing this final rule, and fee payment and collection will begin thirty days thereafter.

The terms defined in framework § 600.1000 apply to the groundfish program except for the definitions for ''borrower, ''deposit principal'', ''fee fish'', and ''reduction fishery''. This action redefines the groundfish program meaning of these four framework terms. This action also creates four new terms which do not appear in the framework. The new groundfish program terms are: ''fee-share fishery'', ''fee-share fishery subaccount'', ''reduction fishery subaccount'', and ''subamount''.

Framework § 600.1012 governs reduction loan obligations in general and certain other reduction loan aspects in general. Framework § 600.1013 governs fish sellers' payment, and fish buyers' collection, of fees under fee systems in general. The framework contemplates each program involving only one reduction fishery. The groundfish program, however, involves both a reduction fishery and six fee-share fisheries. Consequently, for groundfish program purposes, this action revises the regulations only to the minimal extent required to accommodate the difference between the groundfish program and the other programs which the framework contemplates.

Framework § 600.1014 governs fish buyers' fee collection deposits, disbursements, records, and reports in general. Like framework §§ 600.1012 and 600.1013, this action also revises the regulations to reflect the groundfish program's involvement of both a reduction fishery and six fee-share fisheries. This action, however, also and for groundfish program purposes, more extensively revises the regulations in order to adopt some of the commenters' suggestions about the manner in which fish buyers' deposit, disburse, account for, and report about the groundfish program's collected fees.

The following briefly summarizes the provisions of framework §§ 600.1013 and 600.1014.

Under framework § 600.1013, the first ex-vessel buyers (fish buyers) of post-reduction fish subject to a fee system (fee fish) must withhold the fee from the trip proceeds which the fish buyers would otherwise have paid to the parties (fish sellers) who harvested and first sold the fee fish to the fish buyers. Fish buyers calculate the fee to be collected by multiplying the applicable fee rate (depending on whether the fee fish is from the reduction fishery or from one or more of the fee-share fisheries) times the fee fish's full delivery value. Delivery value is the fee fish's full fair market value, including all in-kind compensation or other goods or services exchanged in lieu of cash.

Fish buyers collect the fee when they withhold it from trip proceeds, and fish sellers automatically pay the fee when the fish buyers withhold it. Fee payment and fee collection is mandatory, and there are substantial penalties for failing to pay and collect fees in accordance with the applicable regulations.

Under framework § 600.1014(a)-(d), fish buyers must, no less frequently than at the end of each business week, deposit collected fees in segregated and federally insured accounts until, no less frequently than on the last business day of each month, they disburse all collected fees in the accounts to a lockbox which NMFS has specified for this purpose. Fee collection reports must accompany these disbursements. Fish buyers must maintain specified fee collection records for at least 3 years and send NMFS annual reports of fee collection and disbursement activities.

After evaluating comments received in response to the proposal, this action restates, for groundfish program purposes only, some of the framework

§ 600.1014 provisions, chiefly as follows:

1. Segregated bank accounts will not be required for depositing collected fees;
2. Collected fee deposits will be monthly rather than weekly;
3. Fish buyers may disburse deposited fees up to 14 days after the end of each month rather than having to do so on the last business day of each month;
4. Fish buyers do not have to disburse deposited fees at all until either their total reaches $100 or the 14th day after the end of each calendar year, whichever comes first; and
5. Fish buyers do not have to submit annual fee collection, deposit, and disbursement reports.

Accordingly, this final rule reiterates the applicability for the groundfish program of the entirety of framework § 600.1014(a)-(d) and the non-applicability of framework § 600.1014(e). The balance of framework § 600.1014, i.e., paragraphs(f)-(j), will continue to apply, in their entirety, to the groundfish program.

All parties interested in this final action should carefully read the following framework sections, whose detailed provisions, except as this action specifically revises them, apply to the fee system for repaying the groundfish program's reduction loan:

1. § 600.1012;
2. § 600.1013;
3. § 600.1014;
4. § 600.1015;
5. § 600.1016; and
6. Applicable portions of § 600.1017.

You will not understand this action's full requirements unless you read this action in conjunction with reading at least the framework sections listed above.

Section 212 provides an option for NMFS to enter into agreements with California, Washington, and Oregon regarding groundfish program fees in the fee-share fisheries. While this would not involve actual fee collection (because both Magnuson-Stevens Act section 312(d) and the framework require fish buyers to collect the fee), it would allow fish buyers to use existing state systems for post-collection fee administration.

After all three states enacted legislation which would have allowed them to function in this capacity, NMFS evaluated the feasibility of exercising the section 212 option. For the reasons NMFS stated in its previous responses to public comment about the proposal, however, NMFS concluded that exercising this option was not feasible.

This action also revises the grammar and/or organization of the proposal. None of these revisions intends to make any substantive changes to the proposal.

NMFS, in accordance with framework § 600.1013(d), will establish the initial fee applicable to the reduction fishery and to each fee-share fishery. Immediately after publishing this action, NMFS will, in accordance with framework § 600.1013(d)(1), publish a notification in the **Federal Register** establishing the date from which the fee will be effective. NMFS will mail a copy of this notification, along with detailed fee payment and collection information and guidance, to each affected individual fish seller and fish buyer whom NMFS has contact information. Until the date on which the fee first becomes effective, fish sellers do not have to pay, and fish buyers do not have to collect, the groundfish program fee. The prospective fee rates are:

1. Reduction fishery, 5 percent; and
2. Fee share fisheries:
   a. California coastal Dungeness crab, 1.24 percent,
   b. California pink shrimp, 5 percent,
   c. Oregon coastal Dungeness crab, 0.55 percent,
   d. Oregon pink shrimp, 3.75 percent,
   e. Washington coastal Dungeness crab, 0.16 percent, and
   f. Washington pink shrimp, 1.50 percent.

The rates are percentages of delivery value. See framework § 600.1000 for the definition of ''delivery value'' and for the definition of other terms relevant to this action.

Each disbursement of the $35,662,471 principal amount of the reduction loan began accruing interest as of the date of each such disbursement. The interest rate is a fixed 6.97 percent, and will not change during the term of the reduction loan.

Classification

The Assistant Administrator for Fisheries, NMFS, determined that this final rule is consistent with the Magnuson-Stevens Act and other applicable laws.

In compliance with the National Environmental Policy Act, NMFS prepared an EA for the final notice implementing the groundfish program. The EA discussed the impact of the groundfish program on the natural and human environment and resulted in a finding of no significant impact. The EA considered the implementation of this fee collection system, among other alternatives. Therefore, this final action has received a categorical exclusion from additional analysis. NMFS will provide a copy of the EA upon request (see **ADDRESSES**).

This final rule has been determined to be not significant for purposes of Executive Order 12866. NMFS prepared an RIR for the final notice implementing the groundfish program. NMFS will provide a copy of the RIR upon request (see **ADDRESSES**).

NMFS prepared a FRFA, as required by section 604 of the Regulatory Flexibility Act, which describes the impact that the rule will have on small entities. NMFS will provide a copy of the FRFA upon request (see **ADDRESSES**). A summary of the FRFA follows:

1. Description of Reasons for Action and Statement of Objective and Legal Basis

Section 212 authorized a $46–million fishing capacity reduction program for reduction fishery. Section 212 also authorized a fee system for repaying the reduction loan partially financing the groundfish program's cost. The fee system includes both the reduction fishery and the fee share fisheries.

Section 501(c) appropriated $10 million to partially fund the groundfish program's cost. Public Law 107–206 authorized a reduction loan for financing up to $36 million of the groundfish program's cost. Pursuant to section 212, NMFS implemented the groundfish program, except for a fee system, on July 18, 2003 (68 FR 42613). This action establishes a fee system for the groundfish program.

2. Description of Small Entities to Which the Rule Applies

The Small Business Administration (SBA) has defined any fish harvesting business that is independently owned and operated, not dominant in its field of operation, and with annual receipts of $3.5 million or less, as a small entity. In addition, processors with 500 or fewer employees involved in related industries such as canned and cured fish and seafood or prepared fresh fish and seafood are also considered small entities. According to the SBA's definition of a small entity, virtually all of the groundfish program's approximate 1,800 fish sellers are small entities. This includes 172 fish sellers in the reduction fishery and over 1,600 fish sellers in the six fee-share fisheries. Most of the groundfish program's fish buyers also are small entities.

3. Description of Recordkeeping and Compliance Costs

Please see collection-of-information requirements listed hereafter.

4. Duplication or Conflict with Other Federal Rules

This final rule does not duplicate or conflict with any Federal rules.

5. Description of Significant Alternatives Considered

NMFS considered three alternatives to the proposed action. The first alternative was the status quo. Under this alternative, there would be no fee system and the fish sellers and fish buyers would not have to pay and collect a fee. This alternative was, however, contrary to the groundfish program's statutory requirements and was rejected.

The second alternative was the statutorily mandated industry fee system without state involvement. Under this alternative, the fish buyers of fee fish would withhold the fee from the trip proceeds. Fish buyers would calculate the fee to be collected by multiplying the applicable fee rate times the fee fish's full delivery value. This is the preferred alternative because the groundfish program's statutory authority mandates fee payment and collection.

The third alternative was the statutorily mandated industry fee system with state involvement. This alternative is the same as described in the second alternative except that the States of California, Oregon, and Washington would, in conjunction with their own state tax and fee systems, assume some of the fish buyers' fee deposit and disbursement responsibilities. This alternative would have reduced compliance costs to individual businesses, both fish buyers and sellers. However, this alternative was not chosen because some states:

1. Assess and collect the state taxes and fees based on pounds rather than on dollars,
2. Do not assess or collect their taxes or fees at the point of fish sale, and
3. Involve quarterly fee disbursements.

In addition, one state's legislative authority to participate in this alternative collection authorizes participation of a state agency different than the one administering the existing state system and another state's legislative authority to participate in this alternative expires in less than 2 years (even though fee collection continues for 30 years).

Furthermore, all states indicated that state funding and staffing under this alternative for the reduction loan's 30–year term would be problematic for them.

Finally, the states' collection systems are dissimilar and, without significant modification, might not promote efficient and uniform groundfish program fee collection.

6. Steps the Agency Has Taken to Mitigate Negative Effects of the Action

NMFS has changed aspects of the framework regulations' fee deposit and disbursement requirements to reduce the impact on small entity fish buyers. NMFS proposes to require monthly fee deposits as opposed to the weekly deposits previously required. NMFS also will allow a 14–day grace period from the end of each month for fish buyers to disburse deposit fee principal to NMFS. If the deposit fee principal totals less than $100, the fish buyers need not disburse the deposit fee principal until it totals $100 or more, or until the 14th day after the end of the calendar year in which the fees were deposited, whichever comes first. Furthermore, NMFS proposes to eliminate annual reporting requirements.

This final rule contains collection-of-information requirements subject to the Paperwork Reduction Act (PRA). OMB has approved these information collections under OMB control number 0648–0376. NMFS estimates that the public reporting burden for these requirements will average:

Two hours for submitting a monthly fish buyer fee collection report; and

Two hours for making a fish buyer/fish seller report when

one party fails to either pay or collect the fee.

These response estimates include the time for reviewing instructions, searching existing data sources, gathering and maintaining the data needed, and completing and reviewing the information collection.

Send comments regarding this burden estimate, or any other aspect of this data collection, including suggestions for reducing the burden, to both NMFS and OMB (see **ADDRESSES**).

Notwithstanding any other provision of law, no person is required to respond to, and no person is subject to a penalty for failure to comply with, an information collection subject to the requirements of the PRA unless that information collection displays a currently valid OMB control number.

NMFS has determined that this final rule will not significantly affect the coastal zone of any state with an approved coastal zone management program. This determination was submitted for review by the States of Washington, Oregon, and California.

List of Subjects in 50 CFR Part 600

Fisheries, Fishing capacity reduction, Fishing permits, Fishing vessels, Intergovernmental relations, Loan programs business, Reporting and recordkeeping requirements.

Dated: July 7, 2005.

Rebecca Lent,

Deputy Assistant Administrator for Regulatory Programs, National Marine Fisheries Service.

■ For the reasons in the preamble, the National Marine Fisheries Service amends 50 CFR part 600 as follows:

PART 600—MAGNUSON-STEVENS ACT PROVISIONS

■ 1. An authority citation for part 600 subpart M is added to read as follows:

Authority: 5 U.S.C. 561, 16 U.S.C. 1801 *et seq.*, 16 U.S.C. 1861a(b) through (e), 46 App. U.S.C. 1279f and 1279g, section 144(d) of Division B of Pub. L. 106–554, section 2201 of Pub. L. 107–20, section 205 of Pub. L. 107–117, Pub. L. 107–206, and Pub. L. 108–7.

■ 2. In § 600.1102 the section heading is revised and text is added to read as follows:

§ 600.1102 Pacific Coast groundfish fee.

(a) *Purpose.* This section implements the fee for repaying the reduction loan financing the Pacific Coast Groundfish Program authorized by section 212 of Division B, Title II, of Public Law 108–7 and implemented by a final notification in the **Federal Register** (July 18, 2003; 68 FR 42613).

(b) *Definitions.* Unless otherwise defined in this section, the terms defined in § 600.1000 of subpart L expressly apply to this section. The following terms have the following meanings for the purpose of this section:

Borrower means, individually and collectively, each post-reduction fishing permit holder and/or fishing vessel owner fishing in the reduction fishery, in any or all of the fee-share fisheries, or in both the reduction fishery and any or all of the fee-share fisheries.

Deposit principal means all collected fee revenue that a fish buyer deposits in an account maintained at a federally insured financial institution for the purpose of aggregating collected fee revenue before sending the fee revenue to NMFS for repaying the reduction loan.

Fee fish means all fish harvested from the reduction fishery during the period in which any portion of the reduction fishery's subamount is outstanding and all fish harvested from each of the fee-share fisheries during the period in which any portion of each fee-share fishery's subamount is outstanding.

Fee-share fishery means each of the fisheries for coastal Dungeness crab and pink shrimp in each of the states of California, Oregon, and Washington.

Fee-share fishery subaccount means each of the six subaccounts established in the groundfish program's fund subaccount in which each of the six fee-share fishery subamounts are deposited.

Reduction fishery means all species in, and that portion of, the limited entry trawl fishery under the Federal Pacific Coast Groundfish Fishery Management Plan that is conducted under permits, excluding those registered to whiting catcher-processors, which are endorsed for trawl gear operation.

Reduction fishery subaccount means the subaccount established in the groundfish program's fund subaccount in which the reduction fishery subamount is deposited.

Subamount means each portion of the reduction loan's original principal amount which is allocated either to the reduction fishery or to any one of the fee-share fisheries.

(c) *Reduction loan amount.* The reduction loan's original principal amount is $35,662,471.

(d) *Subamounts.* The subamounts of the reduction loan amount are:

(1) Reduction fishery, $28,428,719; and

(2) Fee-share fisheries:

(i) California coastal Dungeness crab fee-share fishery, $2,334,334,

(ii) California pink shrimp fee-share fishery, $674,202,

(iii) Oregon coastal Dungeness crab fee-share fishery, $1,367,545,

(iv) Oregon pink shrimp fee-share fishery, $2,228,845,

(v) Washington coastal Dungeness crab fee-share fishery, $369,426, and

(vi) Washington pink shrimp fee-share fishery, $259,400.

(e) *Interest accrual inception.* Interest began accruing on each portion of the reduction loan amount on and from the date each such portion was disbursed.

(f) *Interest rate.* The reduction loan's interest rate is 6.97 percent. This is a fixed rate of interest for the full term of the reduction loan's life.

(g) *Repayment term.* For the purpose of determining fee rates, the reduction loan's repayment term shall be 30 years from March 1, 2004, but each fee shall continue for as long as necessary to fully repay each subamount.

(h) *Reduction loan.* The reduction loan shall be subject to the provisions of § 600.1012 of subpart L, except that:

(1) The borrower's obligation to repay the reduction loan shall be discharged by fish sellers in the reduction fishery and in each of the fee-share fisheries paying the fee applicable to each such fishery's subamount in accordance with § 600.1013 of subpart L, and

(2) Fish buyers in the reduction fishery and in each of the fee-share fisheries shall be obligated to collect the fee applicable to each such fishery's subamount in accordance with § 600.1013 of this subpart.

(i) *Fee collection, deposits, disbursements, records, and reports.* Fish buyers in the reduction fishery and in each of the fee share fisheries shall deposit and disburse, as well as keep records for and submit reports about, the fees applicable to each such fishery in accordance with § 600.1014 of this subpart, except that:

(1) *Deposit accounts.* Each fish buyer that this section requires to collect a fee shall maintain an account at a federally insured financial institution for the purpose of depositing collected fee revenue and disbursing the deposit principal directly to NMFS in accordance with paragraph (i)(3) of this section. The fish buyer may use this account for other operational purposes as well, but the fish buyer shall ensure that the account separately accounts for all deposit principal collected from the reduction fishery and from each of the six fee-share fisheries. The fish buyer shall separately account for all fee collections as follows:

(i) All fee collections from the reduction fishery shall be accounted for in a reduction fishery subaccount,

(ii) All fee collections from the California pink shrimp fee-share fishery shall be accounted for in a California shrimp fee-share fishery subaccount,

(iii) All fee collections from the California coastal Dungeness crab fishery shall be accounted for in a California crab fee-share fishery subaccount,

(iv) All fee collections from the Oregon pink shrimp fee-share fishery shall be accounted for in an Oregon shrimp fee-share fishery subaccount,

(v) All fee collections from the Oregon coastal Dungeness crab fee-share fishery shall be accounted for in an Oregon crab fee-share fishery subaccount,

(vi) All fee collections from the Washington pink shrimp fee-share fishery shall be accounted for in a Washington shrimp fee-share fishery subaccount, and

(vii) All fee collections from the Washington coastal Dungeness crab fishery shall be accounted for in a Washington crab fee-share fishery subaccount;

(2) *Fee collection deposits.* Each fish buyer, no less frequently than at the end of each month, shall deposit, in the deposit account established under paragraph (i)(1) of this section, all collected fee revenue not previously deposited that the fish buyer collects through a date not more than two calendar days before the date of deposit. The deposit principal may not be pledged, assigned, or used for any purpose other than aggregating collected fee revenue for disbursement to the fund in accordance with paragraph (i)(3) of this section. The fish buyer is entitled, at any time, to withdraw interest (if any) on the deposit principal, but never the deposit fee principal itself, for the fish buyer's own use and purposes;

(3) *Deposit principal disbursement.* Not later than the 14th calendar day after the last calendar day of each month, or more frequently if the amount in the account exceeds the account limit for insurance purposes, the fish buyer shall disburse to NMFS the full deposit principal then in the deposit account, provided that the deposit principal then totals $100 or more. If the deposit principal then totals less than $100, the fish buyer need not disburse the deposit principal until either the next month during which the deposit principal then totals $100 or more, or not later than the 14th calendar day after the last calendar day of any year in which the deposit principal has not since the last required disbursement totaled $100 or more, whichever comes first. The fish buyer shall disburse deposit principal by check made payable to the groundfish program's fund subaccount. The fish buyer shall mail each such check to the groundfish program's fund subaccount lockbox that NMFS establishes for the receipt of groundfish program disbursements. Each disbursement shall be accompanied by the fish buyer's fee collection report completed in the manner and form which NMFS specifies. NMFS will, before fee payment and collection begins, specify the groundfish program's fund subaccount lockbox and the manner and form of fee collection report. NMFS will do this by means of the notification in § 600.1013(d) of subpart L. NMFS' fee collection report instructions will include provisions for the fish buyer to specify the amount of each disbursement which was disbursed from the reduction fishery subaccount and/or from each of the six fee-share fishery subaccounts;

(4) *Records maintenance.* Each fish buyer shall maintain, in a secure and orderly manner for a period of at least 3 years from the date of each transaction involved, at least the following information:

(i) For all deliveries of fee fish that the fish buyer buys from each fish seller:

(A) The date of delivery,

(B) The fish seller's identity,

(C) The weight, number, or volume of each species of fee fish delivered,

(D) Information sufficient to specifically identify the fishing vessel which delivered the fee fish,

(E) The delivery value of each species of fee fish,

(F) The net delivery value of each species of fee fish,

(G) The identity of the payor to whom the net delivery value is paid, if different than the fish seller,

(H) The date the net delivery value was paid,

(I) The total fee amount collected as a result of all fee fish, and

(J) The total fee amount collected as a result of all fee fish from the reduction fishery and/or all fee fish from each of the six fee-share fisheries; and

(ii) For all collected fee deposits to, and disbursements of deposit principal from, the deposit account include:

(A) The date of each deposit,

(B) The total amount deposited,

(C) The total amount deposited in the reduction fishery subaccount and/or in each of the six fee-share fishery subaccounts,

(D) The date of each disbursement to the Fund's lockbox,

(E) The total amount disbursed,

(F) The total amount disbursed from the reduction fishery subaccount and/or from each of the six fee-share fishery subaccounts, and

(G) The dates and amounts of disbursements to the fish buyer, or other parties, of interest earned on deposits; and

(5) *Annual report.* No fish buyer needs to submit an annual report about fee fish collection activities unless, during the course of an audit under § 600.1014(g), NMFS requires a fish buyer to submit such a report or reports.

(j) Other provisions. The reduction loan is, in all other respects, subject to the provisions of § 600.1012 through applicable portions of § 600.1017, except § 600.1014(e).

[FR Doc. 05–13692 Filed 7–12–05; 8:45 am]

BILLING CODE 3510–22–S

DEPARTMENT OF COMMERCE

National Oceanic and Atmospheric Administration

50 CFR Part 679

[Docket No. 041126332–5039–02; I.D. 070805A]

Fisheries of the Exclusive Economic Zone Off Alaska; Pacific Ocean Perch in the Eastern Aleutian District of the Bering Sea and Aleutian Islands Management Area

AGENCY: National Marine Fisheries Service (NMFS), National Oceanic and Atmospheric Administration (NOAA), Commerce.

ACTION: Temporary rule; closure.

SUMMARY: NMFS is prohibiting directed fishing for Pacific Ocean perch in the Eastern Aleutian District of the Bering Sea and Aleutian Islands management area (BSAI). This action is necessary to prevent exceeding the 2005 Pacific Ocean perch total allowable catch (TAC) in the Eastern Aleutian District of the BSAI.

DATES: Effective 1200 hrs, Alaska local time (A.l.t.), July 10, 2005, through 2400 hrs, A.l.t., December 31, 2005.

FOR FURTHER INFORMATION CONTACT: Josh Keaton, 907–586–7228.

SUPPLEMENTARY INFORMATION: NMFS manages the groundfish fishery in the BSAI according to the Fishery Management Plan for Groundfish of the Bering Sea and Aleutian Islands Management Area (FMP) prepared by the North Pacific Fishery Management Council under authority of the Magnuson-Stevens Fishery Conservation and Management Act. Regulations governing fishing by U.S. vessels in accordance with the FMP appear at subpart H of 50 CFR part 600 and 50 CFR part 679.

The 2005 Pacific Ocean perch TAC in the Eastern Aleutian District of the BSAI is 2,849 metric tons (mt) as established by the 2005 and 2006 final harvest specifications for groundfish in the BSAI (70 FR 8979, February 24, 2005).

In accordance with § 679.20(d)(1)(i), the Administrator, Alaska Region, NMFS, has determined that the 2005 Pacific Ocean perch TAC in the Eastern Aleutian District of the BSAI will soon be reached. Therefore, the Regional Administrator is establishing a directed fishing allowance of 2,799 mt, and is setting aside the remaining 50 mt as bycatch to support other anticipated groundfish fisheries. In accordance with § 679.20(d)(1)(iii), the Regional Administrator finds that this directed fishing allowance has been reached. Consequently, NMFS is prohibiting directed fishing for Pacific Ocean perch in the Eastern Aleutian District of the BSAI.

After the effective date of this closure the maximum retainable amounts at §§ 679.20(e) and (f) apply at any time during a trip.

Classification

This action responds to the best available information recently obtained from the fishery. The Assistant Administrator for Fisheries, NOAA (AA), finds good cause to waive the requirement to provide prior notice and opportunity for public comment pursuant to the authority set forth at 5 U.S.C. 553(b)(B) as such requirement is impracticable and contrary to the public interest. This requirement is impracticable and contrary to the public interest as it would prevent NMFS from responding to the most recent fisheries data in a timely fashion and would delay the closure of Pacific Ocean perch in the Eastern Aleutian District of the BSAI.

The AA also finds good cause to waive the 30-day delay in the effective date of this action under 5 U.S.C. 553(d)(3). This finding is based upon the reasons provided above for waiver of prior notice and opportunity for public comment.

This action is required by § 679.20 and is exempt from review under Executive Order 12866.

Authority: 16 U.S.C. 1801 *et seq.*

Dated: July 8, 2005.

Alan D. Risenhoover,

Acting Director, Office of Sustainable Fisheries, National Marine Fisheries Service.

[FR Doc. 05–13791 Filed 7–08–05; 3:01 pm]

BILLING CODE 3510–22–S

Proposed Rules

Federal Register
Vol. 70, No. 133
Wednesday, July 13, 2005

This section of the FEDERAL REGISTER contains notices to the public of the proposed issuance of rules and regulations. The purpose of these notices is to give interested persons an opportunity to participate in the rule making prior to the adoption of the final rules.

DEPARTMENT OF HEALTH AND HUMAN SERVICES

Food and Drug Administration

21 CFR Parts 310 and 341

[Docket No. 1976N–0052G] (formerly 76N–052G)

RIN 0910–AF33

Cold, Cough, Allergy, Bronchodilator, and Antiasthmatic Drug Products for Over-the-Counter Human Use; Proposed Amendment of the Tentative Final Monograph for Combination Drug Products

AGENCY: Food and Drug Administration, HHS.

ACTION: Proposed rule.

SUMMARY: The Food and Drug Administration (FDA) is proposing to amend the tentative final monograph (TFM) for over-the-counter (OTC) cough-cold combination drug products to remove the combination of an oral bronchodilator (products containing ephedrine or its salts) and an expectorant, and to reclassify this combination drug product as Category II (not generally recognized as safe and effective for OTC use). FDA is also proposing to classify the combination of an oral bronchodilator and an oral nasal decongestant as Category II. FDA is issuing this notice of proposed rulemaking after considering data and information on the appropriateness of these combination drug products to treat mild asthma. Elsewhere in this issue of the **Federal Register**, FDA is proposing to amend the final monograph (FM) for OTC bronchodilator drug products to require additional labeling for all ingredients included in the FM. These proposed rules are part of FDA's ongoing review of OTC drug products.

DATES: Submit written or electronic comments on the proposed monograph amendment and on FDA's economic impact determination by November 10, 2005. See section IX of this document for the proposed effective date of any final rule that may publish based on this proposal.

ADDRESSES: You may submit comments, identified by Docket No. 1976N–0052G by any of the following methods:

- Federal eRulemaking Portal: *http://www.regulations.gov*. Follow the instructions for submitting comments.
- Agency Web site: *http://www.fda.gov/dockets/ecomments*. Follow instructions for submitting comments on the agency Web site.
- E-mail: *fdadockets@oc.fda.gov*. Include Docket No. 1976N–0052G in the subject line of your e-mail message.
- FAX: 301–827–6870.
- Mail/Hand delivery/Courier [For paper, disk, or CD-ROM submissions]: Division of Dockets Management, 5630 Fishers Lane, rm. 1061, Rockville, MD 20852.

Instructions: All submissions received must include the agency name and Docket No. 1976N–0052G. All comments received will be posted without change to *http://www.fda.gov/ohrms/dockets/default.htm*, including any personal information provided. For detailed instructions on submitting comments and additional information on the rulemaking process, see the ''Comments'' heading of the **SUPPLEMENTARY INFORMATION** section of this document.

Docket: For access to the docket to read background documents or comments received, go to *http://www.fda.gov/ohrms/dockets/default.htm* and/or the Division of Dockets Management, 5630 Fishers Lane, rm. 1061, Rockville, MD 20852.

FOR FURTHER INFORMATION CONTACT: Cazemiro R. Martin or Gerald M. Rachanow, Center for Drug Evaluation and Research (HFD–560), Food and Drug Administration, 5600 Fishers Lane, Rockville, MD 20857, 301–827–2222.

SUPPLEMENTARY INFORMATION:

I. Background

A. Advance Notice of Proposed Rulemaking (ANPRM)

In the **Federal Register** of September 9, 1976 (41 FR 38312), FDA published, under § 330.10(a)(6) (21 CFR 330.10(a)(6)), an ANPRM to establish a monograph for OTC cold, cough, allergy, bronchodilator, and antiasthmatic (cough-cold) drug products, together with the recommendations of the Advisory Review Panel on OTC Cold, Cough, Allergy, Bronchodilator, and Antiasthmatic Drug Products (the Panel), which was the advisory review panel responsible for evaluating data on the active ingredients in this drug class. The Panel recommended that the combination of an oral bronchodilator and an expectorant be Category I (generally recognized as safe and effective), provided the product is labeled only for cough associated with asthma (41 FR 38312 at 38326). The Panel did not provide any additional discussion of this combination. The Panel placed the combination of an oral bronchodilator with either an analgesic-antipyretic, anticholinergic, antihistamine, or antitussive (when the product is labeled only for cough associated with asthma) ingredient in Category II (not generally recognized as safe and/or effective) (41 FR 38312 at 38326).

B. TFM

FDA concurred with the Panel in the cough-cold combinations TFM (53 FR 30522 at 30556, August 12, 1988). FDA also classified the combination of caffeine and ephedrine or pseudoephedrine in Category II (53 FR 30522 at 30557). No comments on these specific combinations were submitted in response to the TFM.

C. FM

In the **Federal Register** of October 2, 1986 (51 FR 35326), FDA issued a FM for OTC bronchodilator drug products. The oral active ingredients included in the bronchodilator monograph are ephedrine, ephedrine hydrochloride, ephedrine sulfate, and racephedrine hydrochloride (§ 341.16(a), (b), (c), and (f) (21 CFR 341.16(a), (b), (c), and (f))). The OTC bronchodilator FM also includes epinephrine, epinephrine bitartrate, and racepinephrine hydrochloride (§ 341.16(d), (e), and (g)) as active ingredients administered by ''inhalation.'' Because this proposed rule addresses only oral bronchodilator ingredients, it does not apply to epinephrine and its salts.

D. Proposal to Remove Ephedrine From the Bronchodilator FM

In the **Federal Register** of July 27, 1995 (60 FR 38643), FDA published a proposed rule to amend the FM for OTC bronchodilator drug products to remove

the ingredients ephedrine, ephedrine hydrochloride, ephedrine sulfate, and racephedrine hydrochloride and to classify those ingredients as Category II. In that proposal, FDA did not discuss the rationale of an ephedrine-guaifenesin combination product because the removal of ephedrine ingredients from the monograph would have eliminated such combination products from the market. After FDA published its 1995 proposed rule, the Drug Enforcement Administration (DEA) issued new requirements restricting the sale of ephedrine, its salts, optical isomers, and salts of optical isomers. DEA allows continued, but restricted sales of these ephedrine drug products. In response to the changes in DEA's requirements and comments received on FDA's 1995 proposal, FDA has reconsidered its proposed action and intends to allow continued OTC marketing of single ingredient ephedrine bronchodilator drug products. Elsewhere in this issue of the **Federal Register**, FDA is proposing to amend the FM for OTC bronchodilator drug products to require additional labeling for all ingredients included in the FM.

E. Bronchodilator Combination Drug Products

In the **Federal Register** of September 27, 2001 (66 FR 49276), FDA issued a final rule establishing that cough-cold combination drug products containing any oral OTC bronchodilator active ingredient in combination with any analgesic(s) or analgesic-antipyretic(s), anticholinergic, antihistamine, oral antitussive, or stimulant active ingredient are not generally recognized as safe and effective and are misbranded for OTC use. In the **Federal Register** of December 23, 2002 (67 FR 78158), FDA issued a final rule for OTC cough-cold combination drug products. That final rule did not address the combination of an oral bronchodilator and an expectorant or the combination of an oral bronchodilator and an oral nasal decongestant. Neither combination had been previously classified. FDA indicated that these two combination products would be addressed in a future issue of the **Federal Register**. FDA is addressing these combination products in this document.

The only expectorant ingredient in the OTC cough-cold drug products monograph is guaifenesin (§ 341.18 (21 CFR 341.18)). Therefore, the only currently marketed OTC bronchodilator combination drug products contain an ephedrine component and guaifenesin.

II. FDA's Concerns About Ephedrine-Guaifenesin Combination Products

A. Asthma and Its Treatment

Asthma is a chronic lung disease caused by inflammation of the airways, resulting in episodes of airway narrowing and obstruction. Common symptoms of asthma can include wheezing, shortness of breath, tightness of the chest, difficulty breathing after exercise, and coughing. This cough is not usually productive. People with asthma generally do not require therapy with an expectorant, because increased sputum production and expectoration are not important features of asthma (Ref. 1).

The National Heart, Lung, and Blood Institute (NHLBI)/The World Health Organization (WHO) Global Initiative for Asthma (Ref. 2), the NHLBI'S National Asthma Education Prevention Program (Ref. 3), and the American Academy of Allergy Asthma and Immunology (Ref. 4), recommend pharmacological intervention to treat asthma. These organizations based this recommendation on the understanding that airway obstruction in asthma consists of bronchial smooth muscle spasm and variable degrees of airway inflammation. This inflammation is characterized by edema, mucous secretion, and the influx of a variety of inflammatory cells causing recurrent episodes of wheezing, shortness of breath, chest tightness, and coughing in susceptible individuals.

These organizations recommend pharmacological intervention with what they term as ''controller'' and ''reliever'' medications (Refs. 2, 3, and 4). Medications used to ''control'' asthma include what are commonly called ''anti-inflammatory'' agents (e.g., inhaled corticosteroids, antileukotrienes, cromones) and long-acting bronchodilators used daily on a long-term basis to lessen the severity of persistent asthma symptoms and signs. Medications used to relieve acute symptoms of asthma include the short-acting bronchodilators (primarily inhaled). None of the controller or reliever medications in these asthma guidelines include expectorants.

B. Monograph Uses of Ephedrine and Guaifenesin

Ephedrine is a sympathomimetic drug currently labeled as a bronchodilator for OTC use. The current OTC indication is ''For temporary relief of shortness of breath, tightness of chest, and wheezing due to bronchial asthma'' (§ 341.76(b)(1) (21 CFR 341.76(b)(1))). The labeling of the product may also state one or both of the following uses in § 341.76(b)(2):

(i) ''For the'' (select one of the following: ''temporary relief'' or ''symptomatic control'') ''of bronchial asthma'', and (ii) ''Eases breathing for asthma patients'' (which may be followed by: ''by reducing spasms of bronchial muscles'').

Guaifenesin is the only expectorant active ingredient included in the cough-cold monograph (§ 341.18). It is labeled for OTC use to ''help loosen phlegm (mucus) and thin bronchial secretions to'' (select one or more of the following: ''rid the bronchial passageways of bothersome mucus,'' ''drain bronchial tubes,'' and ''make coughs more productive'') (§ 341.78(b) (21 CFR 341.78(b))).

In the FM for OTC expectorant drug products (54 FR 8494 at 8500, February 28, 1989), FDA stated that the effectiveness of guaifenesin in the symptomatic relief of sputum removal in asthmatics had not been demonstrated. Guaifenesin at the usual recommended dose is of doubtful value for asthma and the clinical data to support its efficacy is conflicting (Refs. 5 and 6). Moreover, in asthma, the drying of secretions along with the narrowing of the airways could potentially result in inspissated (thickened or dried) material and mucus plugs. This could then further increase airway obstruction and lead to further breathing difficulties. FDA pointed out that appropriate treatment for the condition of inspissated secretions is hydration, bronchoscopy with lavage and suctioning combined with anti-inflammatory drugs, and bronchodilators. FDA noted that without such an approach in the treatment of asthmatics, a safety concern may exist for the use of guaifenesin in asthma.

When FDA made these statements in the expectorant section of the cough-cold drug products rulemaking in 1989, it did not change its proposed Category I categorization of a combination of an oral bronchodilator active ingredient and an expectorant active ingredient in the August 12, 1988, cough-cold combinations TFM (53 FR 30522 at 30561). Likewise, FDA did not revise its categorization of this combination in the August 12, 1988, cough-cold combinations TFM when it published its proposal in 1995 to remove ephedrine from the OTC bronchodilator FM. The removal of ephedrine ingredients from the monograph would have eliminated such combination products from the market. FDA also did not discuss this combination in the December 23, 2002, final rule for OTC cough-cold combination drug products because a decision on the status of ephedrine as an OTC bronchodilator

was still pending at that time. FDA discusses the rationale and the benefits/risks of ephedrine-guaifenesin combination drug products in this document (see section II.D of this document).

C. OTC Drug Monograph Combination Policy

The policy for combination products included in OTC drug monographs in § 330.10(a)(4)(iv) states:

> An OTC drug may combine two or more safe and effective active ingredients and may be generally recognized as safe and effective when each active ingredient makes a contribution to the claimed effect(s); when combining of the active ingredients does not decrease the safety or effectiveness of any of the individual active ingredients; and when the combination, when used under adequate directions for use and warnings against unsafe use, provides rational concurrent therapy for a significant proportion of the target population.

D. Rationale and Benefit/Risk of Ephedrine-Guaifenesin Combination Products

Combination products containing ephedrine and guaifenesin can include in their labeling the indications in §§ 341.76(b) and 341.78(b) (see section II.B of this document). For example, the indications section for these combination products could read as follows:

> For temporary relief of shortness of breath, tightness of chest, and wheezing due to bronchial asthma. Eases breathing for asthma patients by reducing spasms of bronchial muscles. Helps loosen phlegm (mucus) and thins bronchial secretions to rid the bronchial passageways of bothersome mucus, drain bronchial tubes, and make cough more productive.

Based on the pathogenesis of asthma, FDA considers the role of expectorants inappropriate in the routine pharmacological management of this disease. There is little evidence in the clinical literature to support the use of expectorants in asthma (Refs. 5 and 6). The use of expectorants in the treatment of asthma is also inconsistent with current asthma management guidelines (Refs. 2 through 5).

The Panel's recommendation of monograph status for the combination of an oral bronchodilator and an expectorant was made in the early 1970's. In 1995, the American Thoracic Society (ATS) discussed chronic obstructive pulmonary disease (COPD) and asthma (Ref. 9). ATS stated that in the past, asthma was generally included under the broad classification of COPD. According to ATS, patients with unremitting asthma are classified as having COPD, while patients with asthma whose airflow obstruction is completely reversible are not considered to have COPD. ATS stated that the pharmacotherapy of COPD is similar to that of asthma. ATS indicates that the goals of therapy for COPD are to induce bronchodilation, decrease the inflammatory reaction, and facilitate expectoration. In discussing drugs affecting mucus, ATS mentioned a study of organic iodide and stated that the values of other agents have not been clearly demonstrated. Expectorants are not included in ATS's recommended pharmacologic therapy for the management of mild or mild-to-moderate COPD (Ref. 9).

FDA no longer considers the combination of an oral bronchodilator (i.e., ephedrine) and an expectorant (i.e., guaifenesin) as providing rational concurrent therapy for a significant proportion of the asthma population for whom self-treatment with OTC drugs may be appropriate (i.e., people with mild asthma). FDA also no longer believes that each active ingredient in the combination makes a contribution to the claimed effect. Asthma patients with severe asthma exacerbations and status asthmaticus may develop mucus plugging in small airways causing severe airflow limitation. Current management in these situations often requires mechanical ventilation, bronchoscopy, and/or mucolytic therapy (Refs. 7 and 8), but not the use of an expectorant. Coughing that may accompany asthma is generally treated with the use of bronchodilators (inhaled and occasionally oral) and not with an expectorant, because increased sputum production is not usually problematic in mild asthma (Ref. 1). Use of an oral bronchodilator in combination with an expectorant is not part of the recommended pharmacological management of asthma (Refs. 2, 3, and 4). FDA believes a health care provider should make the determination whether an expectorant is needed and, in those minority of cases where it may be, then prescribe an expectorant or recommend an appropriate OTC drug product. OTC bronchodilator drug products are required to have the following warning in their labeling: ''Do not use this product unless a diagnosis of asthma has been made by a doctor'' (§ 341.76(c)(1)). If a health care provider determines that an oral bronchodilator and an expectorant are both needed, any small proportion of people with asthma who would use both ingredients can obtain both drug products separately.

E. DEA Restrictions on OTC Ephedrine Drug Products

FDA believes that most people who currently self-treat for mild asthma purchase and use the combination ephedrine-guaifenesin drug product primarily because it is more readily available than OTC single-ingredient ephedrine drug products. As discussed elsewhere in this issue of the **Federal Register**, DEA regulations place restrictions on the sale of single-entity OTC ephedrine drug products. These restrictions include:

- Stocking the product behind the counter where only employees have access (21 CFR 1309.71(a)(2));
- Requiring a record of the purchaser's name and address, the quantity of drug product purchased, and the method of transaction (21 CFR 1310.06); and
- Seeing two forms of identification and obtaining a signature of the purchaser prior to completing the sale (21 CFR 1310.07(d)).

In contrast, the DEA restrictions on the sale of combination ephedrine drug products are not as stringent. Most importantly, DEA regulations currently do not require that OTC combination ephedrine drug products be stocked behind the counter (62 FR 52294, October 7, 1997). In addition, retail distributors of combination ephedrine drug products are not required to do the following: (1) Register with the DEA (§ 1309.21 (21 CFR 1309.21)) or (2) make or keep records for certain sales (§ 1310.03 (21 CFR 1310.03)), such as:

- Sales limited to combination ephedrine drug products;
- Sales that do not exceed a single transaction amount of 24 grams of ephedrine;
- Sales that are limited almost exclusively for personal use, either directly to walk-in customers or in face-to-face transactions by direct sales; and
- Sales that are to an individual for legitimate medical use.

See 21 CFR 1300.02(b)(29) and §§ 1309.21 and 1310.03 for DEA regulations applicable to single-entity ephedrine drug products.

III. FDA's Tentative Conclusion and Proposal

A. Bronchodilator and Expectorant Combination Drug Products

FDA no longer considers ephedrine combination drug products as generally recognized as safe and effective for continued OTC availability. Based on the pathogenesis of asthma and the recommendations from various groups involved in the management of asthma (Refs. 2, 3, and 4), FDA tentatively concludes that there is currently no role for expectorants in the pharmacological management of this chronic lung disease for a significant proportion of people with mild asthma.

FDA has tentatively determined that OTC combination products containing an oral bronchodilator and an expectorant should no longer be available because they do not meet the standards for safe and effective OTC drug products. These combination products are not rational therapy for the treatment of mild asthma because the expectorant component does not contribute to the relief of the condition (see section II.D of this document) for a significant portion of the population. Additionally, this combination is inconsistent with the combination requirements set forth in § 330.10(a)(4)(iv) because the expectorant ingredient does not make a contribution to the claimed effects. Therefore, in this proposed rule, FDA is proposing to reclassify the combination of any single oral bronchodilator active ingredient and any single expectorant active ingredient (currently listed in § 341.85(l) (21 CFR 341.85(l)) of the TFM, 53 FR 30522 at 30561) from Category I to Category II.

B. Bronchodilator and Oral Nasal Decongestant Combination Drug Products

During the rulemaking for OTC cough-cold drug products, no data or comments were submitted on the combination of an oral bronchodilator and an oral nasal decongestant active ingredient. This combination was not discussed by the Panel in its report or by FDA in the TFM or FM. FDA does not believe that this specific combination drug product is marketed OTC at this time. If such a product were marketed, the uses for this combination containing ephedrine and a nasal decongestant are found in § 341.76(b) and 21 CFR 341.80(b). Thus, the labeling would include the bronchodilator claims discussed in section II.B of this document and the claim ''temporarily relieves nasal congestion.'' FDA does not have data showing that people who need relief of the symptoms of mild asthma (wheezing, tightness of chest, and shortness of breath) concurrently need relief of nasal congestion. FDA has not received any information that indicates this combination provides rationale concurrent therapy for a significant proportion of an asthmatic target population. Therefore, FDA considers this combination not to be generally recognized as safe and effective for OTC use. FDA is proposing to classify the combination of an oral bronchodilator (products containing ephedrine or its salts) and any oral nasal decongestant as Category II.

IV. Analysis of Impacts

FDA has examined the impacts of this proposed rule under Executive Order 12866, the Regulatory Flexibility Act (5 U.S.C. 601–612), and the Unfunded Mandates Reform Act of 1995 (2 U.S.C. 1501 *et seq.*). Executive Order 12866 directs agencies to assess all costs and benefits of available regulatory alternatives and, when regulation is necessary, to select regulatory approaches that maximize net benefits (including potential economic, environmental, public health and safety, and other advantages; distributive impacts; and equity). Under the Regulatory Flexibility Act, if a rule has a significant economic impact on a substantial number of small entities, an agency must analyze regulatory options that would minimize any significant impact of the rule on small entities. Section 202(a) of the Unfunded Mandates Reform Act of 1995 requires that agencies prepare a written statement of anticipated costs and benefits before proposing any rule that may result in an expenditure by state, local, and tribal governments, in the aggregate, or by the private sector, of $100 million in any one year (adjusted annually for inflation).

FDA believes that this proposed rule is consistent with the principles set out in Executive Order 12866 and in these two statutes. In addition, the proposed rule is not a significant regulatory action as defined by the Executive order.

FDA is not required to prepare a statement of costs and benefits under the Unfunded Mandates Reform Act because this proposed rule is not expected to result in any 1-year expenditure that would exceed $100 million adjusted for inflation. The current inflation adjusted statutory threshold is about $110 million.

The purpose of this proposed rule is to reclassify the combination of any single oral bronchodilator active ingredient and any single expectorant active ingredient (currently listed in § 341.85(l) of the TFM, 53 FR 30522 at 30561) from Category I to Category II (nonmonograph). Single entity oral bronchodilator and expectorant drug products will remain available OTC for consumer use at this time. This proposed rule also places the combination of an oral bronchodilator and an oral nasal decongestant in Category II. FDA does not believe this combination is currently marketed; therefore, there should be no economic impact on manufacturers.

The potential benefits of this action include better self-treatment of the symptoms of mild asthma. Most people with mild asthma do not need an expectorant to control their symptoms. Nevertheless, FDA believes that some people with asthma continue to purchase the combination ephedrine-guaifenesin products affected by this rule mainly because they are more readily accessible than the single ingredient ephedrine products, which are subject to more DEA restrictions. People with mild asthma would continue to have access to single ingredient ephedrine products and could easily purchase an OTC expectorant. Although this action may pose some minor inconvenience to people with asthma who currently use the combination products, they will still be able to purchase single-ingredient ephedrine products from outlets that are in compliance with DEA single-ingredient ephedrine requirements.

All of the currently marketed OTC ephedrine combination drug products known to FDA are combined with guaifenesin. After the effective date of any final rule based on this proposal, manufacturers will have the choice of either stopping the introduction of their combination product into interstate commerce or reformulating their combination product(s) to a single-ingredient ephedrine product and complying with DEA requirements for selling these products. FDA's Drug Listing System (DLS) identifies 14 manufacturers and 8 distributors/repackers of 36 combination ephedrine hydrochloride and guaifenesin drug products. Other standard reference books (e.g., American Drug Index and Red Book) identify additional ephedrine combination drug products, and FDA is aware that products containing monograph labeling marketed via magazines and catalogues may not be included in the DLS database. Therefore, FDA estimates that there are about 25 manufacturers and distributors/repackers of approximately 50 products that would be affected by the proposed rule. In many cases, manufacturers would bear the costs of stopping the introduction of their products into interstate commerce or the reformulation and subsequent relabeling of the affected products.

The cost to reformulate a drug product varies greatly depending on the nature of the product and manufacturing process, and the size of the firm. No manufacturer would have to change its product dosage form to comply with this rule. However, some manufacturers may have to revalidate (e.g., product, process and/or new supplier), conduct stability tests, and change master production records in order to ensure compliance with good

manufacturing practice (21 CFR parts 210 and 211). FDA estimates that the cost of reformulation would range from $100,000 to $500,000 per product. However, many of these manufacturers already produce a single-ingredient ephedrine product. Moreover, others had previously produced a single-ingredient product before switching to the combined ephedrine-guaifenesin product and may, therefore, need only revalidate. Thus, FDA does not know how many products manufacturers will choose to fully reformulate. If 20 products were reformulated, and using the midpoint of the estimated cost to reformulate of $300,000, the cost to all manufacturers of reformulation would be approximately $6 million (20 products x $300,000 per product). FDA believes that because some manufacturers currently marketing ephedrine combination drug products also market single-ingredient ephedrine products, the reformulation costs associated with this proposed rule may be lower. However, those manufacturers who market only the ephedrine combination drug product would incur the full costs to reformulate, if they so choose, to a single-ingredient ephedrine drug product.

The cost to relabel OTC drug products also varies depending on the type of packaging, the outlet type, and the extent of the necessary labeling changes. FDA estimates that the cost of relabeling would generally be between $2,000 and $3,000 per product. Assuming a high-cost scenario, and that all 50 estimated products would be relabeled, the total labeling cost would be approximately $150,000 (50 products x $3,000 per product).

Based on Small Business Administration size standards, approximately 75 percent of the 14 domestic manufacturers of the affected products are small entities (e.g., fewer than 750 employees), as are most of the 8 distributors/repackers. FDA cannot assess the economic impact on all of these entities because sales data for products sold through all markets are not available. Based on IMS Health data, the two largest selling brands (produced by two different manufacturers and representing three individual products) of oral tablets containing a combination of ephedrine-guaifenesin active ingredients had sales of approximately $4.257 million in 2001 (Ref. 10). This figure represents the sales of products affected by this proposed rule in pharmacies, chain drug stores, mass merchandisers, food stores with pharmacies, and proprietary stores (defined as stores under 10,000 square feet of floor space that sell OTC drug products, but do not have a pharmacy). These sales accounted for about 0.06 percent of the total sales (approximately $7,715.703 million) of all respiratory therapy drugs (USC 28000, Respiratory Therapy) reported by IMS Health in 2001 (Ref. 11). FDA has no information on the sales volume of the affected combination products in other outlet types, e.g., convenience stores, magazine ads, and gas stations.

FDA expects that the industry will experience little overall reduction in sales for the labeled use of ephedrine bronchodilator drug products, because those consumers using the combination product can switch to single ingredient products. FDA anticipates that the manufacturers of the two largest selling brands of oral tablets containing a combination of ephedrine-guaifenesin active ingredients will reformulate these products to single-ingredient ephedrine drug products. If reformulation does not occur upon issuance of a final rule, these manufacturers will incur lost sales of approximately $4 to $5 million annually. FDA cannot calculate the magnitude of lost sales for other companies that market these combination drug products because IMS data do not include specific sales information for products marketed by those companies. FDA believes that the sales of the combination ephedrine-guaifenesin bronchodilator drug products do not make up a large proportion of the total revenues of most of these firms. Consumers will still be able to purchase single-ingredient ephedrine bronchodilator drug products. Accordingly, an increase in sales may occur for current manufacturers of single-ingredient products and manufacturers who reformulate combination products to single-ingredient products.

FDA considered but rejected two alternatives for the proposed rule: (1) Additional labeling and (2) leaving the combination ephedrine-guaifenesin drug products on the OTC market. FDA does not believe that additional labeling would ensure proper use of this combination product because FDA no longer considers it to be a rational concurrent therapy and because FDA believes that both active ingredients do not make a contribution to the claimed effect. Current treatment guidelines for mild asthma do not recommend the use of an expectorant. FDA believes that a doctor should make a case-by-case determination whether a person with mild asthma needs an expectorant drug product, and in those rare instances should prescribe or recommend an appropriate product. For the same reasons, FDA has tentatively concluded that it would be inappropriate to leave ephedrine-guaifenesin combination drug products in the OTC drug marketplace. FDA proposes that manufacturers be required to stop introducing their combination product into interstate commerce, or to implement any required reformulation and labeling changes to a single-ingredient product within 180 days after any final rule based on this proposal is published.

There is one other federal rule—DEA regulations controlling the distribution of OTC ephedrine drug products—that is related to, but does not conflict with, this proposed rule. Manufacturers and other marketers of OTC ephedrine drug products must register with DEA (§ 1309.21) and meet other DEA requirements.

With regard to the Regulatory Flexibility Act, FDA does not believe that the proposed rule will have a significant economic impact on a substantial number of small entities. However, there is uncertainty concerning both the number of affected entities and products. This analysis of impacts, together with other relevant sections of this document, serves as FDA's initial regulatory flexibility analysis. FDA specifically requests detailed industry comment regarding both the number of small entities and products affected, as well as any potentially significant impact of this rule on small entities.

V. Paperwork Reduction Act of 1995

FDA notes that this proposed rulemaking does not contain any labeling requirements. However, if a company chooses to reformulate its combination product(s) to a single-ingredient product, relabeling would be necessary. Those labeling requirements are found in the existing monograph for OTC bronchodilator drug products in § 341.76. (See proposed changes to that monograph elsewhere in this issue of the **Federal Register**.)

VI. Environmental Impact

FDA has determined under 21 CFR 25.31(a) that this action is of a type that does not individually or cumulatively have a significant effect on the human environment. Therefore, neither an environmental assessment nor an environmental impact statement is required.

VII. Federalism

FDA has analyzed this proposed rule in accordance with the principles set forth in Executive Order 13132. FDA has determined that the proposed rule does not contain policies that have

substantial direct effects on the States, on the relationship between the National Government and the States, or on the distribution of power and responsibilities among the various levels of government. Accordingly, FDA has tentatively concluded that the proposed rule does not contain policies that have federalism implications as defined in the Executive order and, consequently, a federalism summary impact statement is not required.

VIII. Request for Comments

Interested persons may submit to the Division of Dockets Management (see **ADDRESSES**) written or electronic comments regarding this document. Submit a single copy of electronic comments or three paper copies of any mailed comments, except that individuals may submit one paper copy. Comments are to be identified with the docket number found in brackets in the heading of this document and may be accompanied by a supporting memorandum or brief. Received comments may be seen in the Division of Dockets Management between 9 a.m. and 4 p.m., Monday through Friday.

IX. Proposed Effective Date

FDA is proposing that any final rule that may issue based on this proposal be effective 180 days after its date of publication in the **Federal Register**.

X. References

The following references are on display in the Division of Dockets Management (see **ADDRESSES**) under Docket No. 1976N–0052G and may be seen by interested persons between 9 a.m. and 4 p.m., Monday through Friday.

1. Woolcock, A. J., ''Asthma,'' *Textbook of Respiratory Medicine*, 2nd ed., W. B. Saunders Co., Philadelphia, PA, 2:1245–1319, 1994.

2. ''Global Strategy for Asthma Management and Prevention. NHLBI/WHO Workshop Report,'' *National Institutes of Health Publication*, no. 95–3659, January 1995.

3. ''Guidelines for the Diagnosis and Management of Asthma. National Asthma Education and Prevention Program (NAEPP) Expert Panel Report,'' *National Institutes of Health Publication*, Update on Selected Topics 2002, pp. 115–116, 2002.

4. ''Pediatric Asthma/Promoting Best Practice. Guide for Managing Asthma in Children,'' *American Academy of Allergy, Asthma, and Immunology (AAAAI)*, 1999.

5. American Academy of Allergy, Asthma, and Immunology. Practice Parameters for the Diagnosis and Treatment of Asthma, *Journal of Allergy and Clinical Immunology*, 96(5 Part 2):S707–S870, 1995.

6. ''Airway Mucus and the Mucociliary System,'' in *Allergy: Principles and Practice*, edited by Middleton, E. M., et. al., 6th ed., Mosby-Year Book, Inc., St. Louis, Missouri, p. 753, 2003.

7. Lemanski, R. F., and W. W. Busse, *Journal of the American Medical Association*, 278:1855–1873, 1997.

8. Henke, C. et al., ''Combined Bronchoscopy And Mucolytic Therapy For Patients With Severe Refractory Status Asthmaticus On Mechanical Ventilation: A Case Report And Review Of The Literature,'' *Critical Care Medicine*, 22(2):1880–1883, 1994.

9. ''Standards for the Diagnosis and Care of Patients with Chronic Obstructive Pulmonary Disease. American Thoracic Society Statement,'' *American Journal of Respiratory Critical Care Medicine*, 152:S77–S120, 1995.

10. *IMS Health, Retail & Provider Perspective*, Year 2001, Data Extracted December 2002.)(Proprietary data used by FDA with the permission of IMS Health.)

11. *IMS Health, Retail & Provider Perspective*, 2:449, January-December 2001. (Proprietary data used by FDA with the permission of IMS Health.)

List of Subjects

21 CFR Part 310

Administrative practice and procedure, Drugs, Labeling, Medical devices, Reporting and recordkeeping requirements.

21 CFR Part 341

Labeling, Over-the-counter drugs.

Therefore, under the Federal Food, Drug, and Cosmetic Act and under authority delegated to the Commissioner of Food and Drugs, it is proposed that 21 CFR parts 310 and 341 (as proposed in the **Federal Register** of August 12, 1988 (53 FR 30522)) be amended as follows:

PART 310—NEW DRUGS

1. The authority citation for 21 CFR part 310 continues to read as follows:

Authority: 21 U.S.C. 321, 331, 351, 352, 353, 355, 360b–360f, 360j, 361(a), 371, 374, 375, 379e; 42 U.S.C. 216, 241, 242(a), 262, 263b–263n.

2. Section 310.545 is amended by adding paragraphs (a)(6)(iv)(E) and (d)(27) to read as follows:

§ 310.545 Drug products containing certain active ingredients offered over-the-counter (OTC) for certain uses.

(a) * * *

(6) * * *

(iv) * * *

(E) *Approved as of* [date 180 days after date of publication in the **Federal Register**]. Any oral bronchodilator active ingredient (e.g., ephedrine, ephedrine hydrochloride, ephedrine sulfate, racephedrine hydrochloride, or any other ephedrine salt) in combination with any expectorant active ingredient (listed in § 341.18 of this chapter) or in combination with any oral nasal decongestant active ingredient (listed in § 341.20 of this chapter).

* * * * *

(d) * * *

(27) [Date 180 days after date of publication in the **Federal Register**], for products subject to paragraph (a)(6)(iv)(E) of this section.

* * * * *

PART 341—COLD, COUGH, ALLERGY, BRONCHODILATOR, AND ANTIASTHMATIC DRUG PRODUCTS FOR OVER-THE-COUNTER HUMAN USE

3. The authority citation for 21 CFR part 341 continues to read as follows:

Authority: 21 U.S.C. 321, 351, 352, 353, 355, 360, 371.

§ 341.40 [Amended]

4. Proposed § 341.40 is amended by removing paragraph (l) and redesignating paragraphs (m) through (bb) as paragraphs (l) through (aa) respectively.

Dated: June 30, 2005.

Jeffrey Shuren,

Assistant Commissioner for Policy.

[FR Doc. 05–13708 Filed 7–12–05; 8:45 am]

BILLING CODE 4160–01–S

DEPARTMENT OF HEALTH AND HUMAN SERVICES

Food and Drug Administration

21 CFR Part 341

[Docket No. 1995N–0205] (formerly Docket No. 95N–0205)

RIN 0910–AF32

Cold, Cough, Allergy, Bronchodilator, and Antiasthmatic Drug Products for Over-the-Counter Human Use; Proposed Amendment of Monograph for Over-the-Counter Bronchodilator Drug Products

AGENCY: Food and Drug Administration, HHS.

ACTION: Proposed rule; withdrawal of previous proposed rule.

SUMMARY: The Food and Drug Administration (FDA) is proposing to amend the final monograph (FM) for over-the-counter (OTC) bronchodilator drug products to add additional warnings (e.g., an ''Asthma alert'') and to revise the indications, warnings, and directions in the labeling of products containing the ingredients ephedrine, ephedrine hydrochloride, ephedrine

sulfate, epinephrine, epinephrine bitartrate, racephedrine hydrochloride, and racepinephrine hydrochloride. This proposed rule is part of FDA's ongoing review of OTC drug products. FDA is also withdrawing the proposed rule (see the **Federal Register** of July 27, 1995 (60 FR 38643)) to remove the ephedrine ingredients from the FM.

DATES: Submit written or electronic comments on the proposed monograph amendment and on FDA's economic impact determinations by November 10, 2005. The date of withdrawal of the July 27, 1995, proposed rule is July 13, 2005. Please see section XI of this document for the proposed effective date of any final rule that may publish based on this proposal.

ADDRESSES: You may submit comments, identified by Docket No. 1995N–0205 and/or RIN number 0910–AF32, by any of the following methods:

- Federal eRulemaking Portal: *http://www.regulations.gov*. Follow the instructions for submitting comments.
- Agency Web site: *http://www.fda.gov/dockets/ecomments*. Follow instructions for submitting comments on the agency Web site.
- E-mail: *fdadockets@oc.fda.gov*. Include Docket No. 1995N–0205 and/or RIN number 0910–AF32 in the subject line of your e-mail message.
- FAX: 301–827–6870.
- Mail/Hand delivery/Courier (for paper, disk, or CD–ROM submissions): Division of Dockets Management, 5630 Fishers Lane, rm. 1061, Rockville, MD 20852.

Instructions: All submissions received must include the agency name and Docket No. or Regulatory Information Number (RIN) for this rulemaking. All comments received will be posted without change to *http://www.fda.gov/ohrms/dockets/default.htm*, including any personal information provided. For detailed instructions on submitting comments and additional information on the rulemaking process, see the ''Comments'' heading of the **SUPPLEMENTARY INFORMATION** section of this document.

Docket: For access to the docket to read background documents or comments received, go to *http://www.fda.gov/ohrms/dockets/default.htm* and insert the docket number, found in brackets in the heading of this document, into the ''Search'' box and follow the prompts and/or go to the Division of Dockets Management, 5630 Fishers Lane, rm. 1061, Rockville, MD 20852.

FOR FURTHER INFORMATION CONTACT: Cazemiro R. Martin or Gerald M. Rachanow, Center for Drug Evaluation and Research (HFD–560), Food and Drug Administration, 5600 Fishers Lane, Rockville, MD 20857, 301–827–2222.

SUPPLEMENTARY INFORMATION:

Table of Contents

I. Background
A. Advance Notice of Proposed Rulemaking (ANPRM)
B. Tentative Final Monograph (TFM) and FM
C. Proposal to Remove Ephedrine Ingredients From the OTC Bronchodilator FM
II. Comments Received in Response to the 1995 Proposal to Remove Ephedrine Ingredients From the OTC Bronchodilator FM
A. Number of Comments Received
B. Summary of Comments Received
III. FDA's Response to the Comments
A. Asthma and Its Treatment With Ephedrine
B. Benefit-Risk Assessment
C. Labeling for OTC Bronchodilator Drug Products
D. Related FDA Regulatory Actions
E. Related DEA Regulatory Actions
IV. FDA's Tentative Conclusions
A. Summary of Major Labeling Changes
B. Statement About Warnings
V. Proposed Implementation
VI. Analysis of Impacts
A. Relabeling Costs
B. Regulatory Alternatives Considered
VII. Paperwork Reduction Act of 1995
VIII. Environmental Impact
IX. Federalism
X. Request for Comments
XI. Proposed Effective Date
XII. References

I. Background

A. Advance Notice of Proposed Rulemaking (ANPRM)

In the **Federal Register** of September 9, 1976 (41 FR 38312), FDA published, under § 330.10(a)(6) (21 CFR 330.10(a)(6)), an ANPRM to establish a monograph for OTC cold, cough, allergy, bronchodilator, and antiasthmatic drug products, together with the recommendations of the Advisory Review Panel on OTC Cold, Cough, Allergy, Bronchodilator, and Antiasthmatic Drug Products (the Panel), which was the advisory review panel responsible for evaluating data on the active ingredients in this drug class. The Panel recommended that ephedrine and epinephrine preparations be category I (generally recognized as safe and effective) for OTC bronchodilator use (41 FR 38312 at 38370 through 38372).

B. Tentative Final Monograph (TFM) and FM

FDA concurred with the Panel in the bronchodilator TFM (47 FR 47520 at 47527, October 26, 1982). FDA included the following active ingredients in the FM for OTC bronchodilator drug products: Ephedrine ingredients (ephedrine, ephedrine hydrochloride, ephedrine sulfate, and racephedrine hydrochloride) and epinephrine ingredients (epinephrine, epinephrine bitartrate, and racepinephrine hydrochloride) (51 FR 35326 at 35339, October 2, 1986). In this current proposed rule, the term ''ephedrine ingredients'' includes the four active ingredients included in the FM; the term ''epinephrine ingredients'' includes the three active ingredients included in the FM; and the term ''OTC bronchodilator drug products'' includes products containing any of these seven active ingredients.

C. Proposal to Remove Ephedrine Ingredients From the OTC Bronchodilator FM

In the **Federal Register** of July 27, 1995 (60 FR 38643), FDA published a proposed rule (the 1995 proposal) to amend the FM for OTC bronchodilator drug products. It proposed to remove the ephedrine ingredients (ephedrine, ephedrine hydrochloride, ephedrine sulfate, and racephedrine hydrochloride) and to classify those ingredients as not generally recognized as safe and effective for OTC use. At that time, FDA reassessed the benefit/risk of OTC ephedrine drug products and proposed their removal because of safety concerns, including the potential for these products to cause harm as a result of misuse and abuse. Interested persons were invited to submit written comments or objections to the 1995 proposal and FDA's economic impact determination by August 28, 1995.

II. Comments Received in Response to the 1995 Proposal to Remove Ephedrine Ingredients From the OTC Bronchodilator FM

A. Number of Comments Received

FDA received comments from 56 consumers, 37 health professionals, 8 manufacturers of OTC bronchodilator drug products, 5 Federal and State government agencies, 5 national associations, 4 boards of pharmacy, 2 distributors of dietary supplements, 1 consulting firm, and 1 member of Congress. Several comments addressed FDA's economic impact determination. Copies of the comments and additional information that have come to FDA's attention since publication of the 1995

proposal are on public display in the Division of Dockets Management (see **ADDRESSES**).

B. Summary of Comments Received

(Comment 1) Several comments contended that the 1995 proposal does not indicate whether FDA had analyzed whether additional labeling warnings (including restrictions on distribution) would address FDA's concerns about safer OTC use of ephedrine drug products, especially by young people. The comments stated that FDA should use its authority to amend current product labeling warnings required by the FM for OTC bronchodilator drug products.

(Comment 2) The comments suggested a number of reasons for the potential unsafe use of OTC ephedrine drug products:

- Virtually all of the unsafe use is related to products with brand names that promote the unapproved pharmacological effects of ephedrine.
- Although these products are labeled with the required FDA bronchodilator labeling, they are promoted in the marketplace as stimulants, weight loss products, and performance enhancers.
- These products are readily available for sale in convenience stores, service stations, and truck stops or by magazine mail order.
- Little or no restrictions exist on the sale of these products to teenagers and children.
- FDA and the Federal Trade Commission have not utilized their enforcement authority to address the safety problems associated with improper promotion of these products, which is the main problem.

(Comment 3) Several comments made suggestions concerning OTC sales of these products. These included the following recommendations:

- Proof of age should be required to reduce purchase of these products by children.
- Ephedrine and its salts should be placed under schedule V of the Controlled Substances Act to control sales, while allowing people who have a legitimate medical need for the products to purchase them.
- States could restrict OTC sale of ephedrine drug products.

(Comment 4) Many comments supported FDA's proposal to remove ephedrine active ingredients from the OTC marketplace. In addition, these comments presented the following arguments against the sale of all OTC bronchodilator drug products:

- Easy access leads to self diagnosis, results in the delay of treatment, and may mask other symptoms.
- People who use OTC bronchodilators do not receive patient education about their disease, about the medication, or about the product's possible side effects on the heart and central nervous system.
- OTC availability allows the products to be sold to individuals of any age and implies that mild asthma is not serious, despite the fact that people with mild asthma can die from the disease.
- People can make deadly mistakes if they do not use these products properly.
- People do not, or cannot, read the product's warnings and do not always understand or heed what they read.
- Parents often use these products for their small children, even though interaction with a pediatrician is necessary for treating a child's asthma.
- OTC bronchodilators are often used for unintended purposes.

(Comment 5) Several comments cited a number of problems occurring in their States as a result of the unrestricted availability of OTC ephedrine drug products. These included the use of higher than the labeled doses, prolonged use of products, use for unapproved indications (e.g., for weight loss and as a stimulant), and improper use, particularly by children.

(Comment 6) A few comments addressed the OTC availability of epinephrine aerosol dosage forms[1] and dietary supplements that contain ephedrine alkaloids or ephedra.[2]

III. FDA's Response to the Comments

After considering the comments submitted for the 1995 proposal to remove ephedrine and other active ingredients from the FM, FDA is withdrawing that proposal. The scope and coverage of this current proposed rule differ from the 1995 proposal. FDA has given serious consideration to the various arguments presented by the comments on the 1995 proposal, has considered other information, and has determined that ephedrine and other bronchodilator ingredients should remain in the FM for self-treatment of mild bronchial asthma for several reasons:

- There are people with diagnosed mild bronchial asthma for whom the benefits of symptomatic treatment with OTC bronchodilators for temporary wheezing, shortness of breath, and tightness of chest outweigh the risks of use.
- Additional labeling warnings and directions in this current proposal provide information to promote safer use of these products.
- FDA has taken regulatory action against ephedrine drug products with misleading brand names that promoted weight loss, enhancement of athletic performance, or stimulant uses.
- Drug Enforcement Administration (DEA) requirements restricting the sale of ephedrine, its salts, optical isomers, and salts of optical isomers that became effective after FDA published the 1995 proposal are in effect and, among other things, require single-ingredient ephedrine drug products to be sold behind the counter. Therefore, access to these products is controlled.

A. Asthma and Its Treatment With Ephedrine

Asthma is a chronic lung disease caused by inflammation of the airways, resulting in episodes of airway narrowing and obstruction. Asthma can be serious and should be diagnosed and treated by a physician. Although there is no cure for asthma, appropriate management most often leads to control of the condition. FDA notes that the Panel stated that sympathomimetic drugs (e.g., ephedrine) are used to overcome the spasm that causes narrowing of the bronchial air tubes, and the usefulness of ephedrine is limited to the milder forms of asthma (41 FR 38312 at 38370 through 38371).

In assessing ephedrine, the Panel relied on data from two studies conducted in 1973 and 1975, respectively. The patient population enrolled in these studies was not only clinically stable (i.e., normal electrocardiogram, blood pressure, and pulse), but also had no apparent history of adverse events related to treatment with other stimulant bronchodilators used at the time. One study was a double-blind comparison of 24 milligrams (mg) ephedrine and a combination of 24 mg of ephedrine and 130 mg theophylline (41 FR 38312 at

[1] The 1995 proposal did not involve epinephrine aerosol dosage forms. In the **Federal Register** of May 20, 1996 (61 FR 25142), FDA amended the bronchodilator drug products FM by removing pressurized metered-dose aerosol container dosage forms for the ingredients epinephrine, epinephrine bitartrate, and racepinephrine hydrochloride. The bronchodilator FM currently includes these three epinephrine ingredients only for use in a hand-held rubber bulb nebulizer (21 CFR 341.76(d)(2)). Accordingly, because these ingredients in pressurized metered-dose aerosol container dosage forms are not included in this document, FDA is not addressing the comments on this dosage form.

[2] The 1995 proposal on OTC bronchodilator drug products did not involve dietary supplements. FDA has addressed dietary supplements containing ephedrine alkaloids separately in a final rule that published on February 11, 2004 (69 FR 6788), under Docket No. 1995N–0304. The final rule declared dietary supplements containing ephedrine alkaloids adulterated under section 402(f)(1)(A) of the Federal Food, Drug, and Cosmetic Act (the act) (21 U.S.C. 342(f)(1)(A)) because they present an unreasonable risk of illness or injury. Accordingly, dietary supplements containing ephedrine alkaloids may no longer be marketed in the United States.

38371). Measurements including specific airway resistance, vital capacity, and forced expiratory volume in 1 second (FEV_1) showed that ephedrine significantly decreased the airway resistance and increased both capacity and FEV_1 over a 2-hour period. This effect was enhanced and prolonged by the presence of theophylline, a prescription drug. The Panel cited another study comparing ephedrine and terbutaline (a prescription drug) in 26 asthmatics. The data indicated that 25 mg ephedrine resulted in significant improvement in the pulmonary function tests between 120 and 240 minutes after taking a single dose (41 FR 38312 at 38371). The results were similar to 2.5 mg terbutaline, but less than the effect of 5 mg terbutaline. These clinical studies supported improvement in pulmonary function tests between 2 and 4 hours after taking a single dose of 25 mg ephedrine, with the improvements lasting up to 4 hours. These studies support the use of ephedrine for patients with asthma who are otherwise clinically stable (i.e., not found by a physician to have high blood pressure or other cardiovascular risk).

Ephedrine is an α and β adrenergic agonist and also enhances the release of norepinephrine from sympathetic neurons. In addition to its bronchodilation effect, other effects of ephedrine are related to its pharmacodynamic actions through α and β adrenergic receptors (Ref. 1). These include awareness of heart beat, rapid heart beat, and variable increases of blood pressure. The Panel indicated that a study by Dulfano and Glass on 26 asthmatics between 28 and 61 years old showed that (at measured intervals of 15, 30, 60, 120, 180, and 240 minutes) a single dose of 25 mg ephedrine had no significant effect on either heart rate or blood pressure (41 FR 38312 at 38370).[3] The Panel also cited a study by Tashkin and Simmons of the cardiovascular effects of 25 mg ephedrine (over a 7-hour period) in 20 asthmatics. The Panel noted that there was only a modest increase in heart rate of up to 11 beats per minute as a maximum, and the systolic and diastolic blood pressure showed no significant change (41 FR 38312 at 38370).[4]

In 1988, Chua and Benrimoj reviewed the blood pressure effects of OTC sympathomimetic drugs, including ephedrine (Ref. 2). They made the following observations:

- McLaurin et al. (1961) and Laitinen et al. (1982) found 25 mg of ephedrine produced no significant effect on blood pressure and heart rate of normotensive patients.
- Tashkin et al. (1975) obtained similar results when comparing the cardiovascular and bronchial effects of terbutaline with ephedrine.
- Bye et al. (1974) demonstrated a significant rise in systolic blood pressure of 17 and 7 millimeters of mercury (mm Hg) with 50 and 25 mg of ephedrine, respectively, but no effect on diastolic blood pressure.
- Elis et al. (1967) showed that a single oral dose of 30 mg ephedrine produced an average increase in mean arterial blood pressure of 5 mm Hg.
- Drew et al. (1978) showed that oral doses of 60 mg ephedrine produced significant increases in systolic and diastolic blood pressure in normotensive subjects.
- The discrepancy between Bye et al. and McLaurin et al. may be due to the different parameters analyzed and the time intervals for blood pressure measurement.

Other information also supports a pressor effect (increases blood pressure) of ephedrine. Intravenous ephedrine is used to increase blood pressure in patients with hypotension during spinal and epidural anesthesia, particularly during obstetrical procedures (Ref. 3).

In the recent final rule on dietary supplements containing ephedrine alkaloids (69 FR 6788, February 11, 2004), FDA discussed the results from a study by Boozer et al. (Ref. 4). That study evaluated the blood pressure effects of a combination of ephedrine alkaloids and caffeine compared to placebo over a 6-month period. Using automated blood pressure measurements over 24 hours at weeks 1, 2, and 4, the ephedrine alkaloid and caffeine group had significantly higher blood pressure measurements after 4 weeks of treatment. The effect reported in this study cannot be attributed to the caffeine because the effect of caffeine on blood pressure is transient, and the acute effect of caffeine to increase blood pressure is lost within 2 weeks of continued use (69 FR 6788 at 6802). FDA finds that the collective evidence suggests that ephedrine at doses recommended for a bronchodilator effect causes elevation of blood pressure. Some individuals who use ephedrine are at risk of experiencing adverse effects from therapy because of ephedrine's effect on blood pressure. Despite the results of the Boozer study and other evidence, FDA considers the therapeutic benefits of ephedrine as an OTC bronchodilator outweigh its effects in elevating blood pressure based on its temporary and intermittent use. (See also section III.B of this document.)

According to the National Asthma Education and Prevention Program guidelines, mild intermittent asthma is defined as having symptoms no more than twice a week during the day or twice a month at night (Ref. 5). Between asthmatic episodes, these asthmatics have no symptoms and can maintain a normal level of activity. FDA has determined that people with mild intermittent asthma are the only category of asthmatics who should be candidates for oral ephedrine. Asthmatics with more severe asthma disease (i.e., persistent asthma) should be under the care of a physician for consideration of additional therapy to control the disease (Ref. 6).

The Panel noted that wide use of epinephrine aerosols for temporary relief of milder forms of asthma has been attended by few and mild side effects. The Panel cited a double-blind study in asthmatics during which epinephrine aerosol demonstrated a significant increase in bronchial air flow in 15 minutes accompanied by symptomatic relief, whereas the placebo gave little change (41 FR 38312 at 38372). The Panel concluded that epinephrine is a safe and effective OTC bronchodilator ingredient when used according to recommended labeling, and FDA included epinephrine in the FM (51 FR 35326 at 35332 through 35333).

B. Benefit-Risk Assessment

FDA has done a benefit-risk assessment of the different uses of ephedrine ingredients. FDA has determined, based on its review of the available information, that the benefits of single-dose ephedrine ingredients for the temporary relief of mild asthma outweigh the risks. In contrast, FDA determined for dietary supplements containing ephedrine alkaloids that the risks of use outweigh any benefits.

In the **Federal Register** of February 11, 2004, FDA declared dietary supplements containing ephedrine alkaloids adulterated under the act because they present an unreasonable risk of illness or injury based on a risk-benefit analysis (69 FR 6788 at 6824). After reviewing the available data on weight loss, enhancement of athletic

[3] The authors reported maximal cardiovascular effects at 180 minutes after administration of ephedrine compared to control (baseline): Heart rate (beats per minute) decreased from 91.6 to 83.1; blood pressure (millimeters of mercury (mm Hg)), systolic increased from 127.8 to 129.9 and diastolic increased from 81.0 to 82.4.

[4] The authors reported that after ephedrine, mean heart rate was significantly higher than control (baseline) values (average 7.4 to 10.9 beats per minute) at 2 to 5 hours as well as mean placebo values (average 7.7 to 10.6 beats per minute at 2, 4, and 5 hours). The authors measured blood pressure over a 7-hour period after the subjects took ephedrine.

performance, eased breathing in healthy individuals, and other uses, FDA concluded that the data do not indicate that these dietary supplement products containing ephedrine alkaloids provide a benefit sufficient to outweigh the risks. FDA stated that there is sufficient evidence to conclude that ephedrine alkaloids can increase blood pressure and heart rate. FDA also stated that dietary supplements containing ephedrine alkaloids ''expose users to several risks, including the consequences of a sustained increase in blood pressure (e.g., serious illnesses or injuries that include stroke and heart attack that can result in death) and increased morbidity and mortality from worsened heart failure and proarrhythmic effects'' (69 FR 6788 at 6827). FDA also stated that although the proarrhythmic effects of dietary supplements containing ephedrine alkaloids typically occur only in susceptible individuals, the long-term risks from elevated blood pressure can occur even in nonsusceptible, healthy individuals (69 FR 6788 at 6827). FDA concluded that dietary supplements containing ephedrine alkaloids are adulterated because they present an unreasonable risk of illness or injury under the conditions of use recommended or suggested in labeling or, if no conditions of use are suggested or recommended in labeling, under ordinary conditions of use. FDA does not consider its decision on the use of ephedrine alkaloids in dietary supplements as precluding the use of sympathomimetic ingredients in other regulated products for appropriate populations. The benefits compared to risks should be analyzed in each instance.

In the clinical studies discussed in section III.A of this document, ephedrine demonstrated a bronchodilator effect in subjects with mild asthma. This bronchodilator effect provides temporary relief of shortness of breath, tightness of the chest, and wheezing due to bronchial asthma. These OTC ephedrine drug products provide health benefits when used by appropriate populations (i.e., mild asthmatics) for a limited period of time by relieving the symptoms of an asthma attack and possibly reducing symptom progression. Relieving symptoms of a mild asthma attack is an important benefit. The relief of symptoms enables an asthmatic to perform normal everyday activities without restrictions brought on by shortness of breath. The finding that OTC single-ingredient ephedrine drug products provide a health benefit for mild asthmathics justifies the continued marketing of such products despite the risks. This favorable benefit-risk assessment distinguishes ephedrine as a drug from FDA's unfavorable benefit-risk assessment for dietary supplements containing ephedrine alkaloids.

FDA's decision in this proposed rule to have a different position for OTC drug products that contain ephedrine compared to dietary supplements that contain ephedrine alkaloids is not arbitrary or capricious. The decision is based on differences in the intended uses of these products, as well as differences in the scientific evidence available to support the risk-benefit ratio for the products. The risk-benefit ratio is dependent on several factors, including the product's intended use, the product's benefits, if any, and the availability of adequate measures to control risk.

FDA recognizes the risks associated with ephedrine containing drug products. However, there are several differences between OTC drug products containing ephedrine and dietary supplements that contain ephedrine alkaloids that may be relevant to the differing risk-benefit profiles of these products.

- Ephedrine used in a drug product in the treatment of asthma needs to meet the United States Pharmacopeia (USP) standards of identity, strength, quality, and purity. The USP ingredients contain not less than 98 or 98.5 percent and not more than 100.5 or 101 percent of the declared amount of ephedrine, ephedrine hydrochloride, or ephedrine sulfate (Ref. 7). The botanical sources of ephedrine that were used in dietary supplement products did not have to meet USP standards and contained varying amounts of ephedrine and other ephedrine alkaloids depending upon the botanical species that were used. Although the proportions of the various ephedrine alkaloids in botanical species vary from one species to another, in most species used commercially, ephedrine was typically the predominant alkaloid in the raw material (69 FR 6788 at 6789).
- Botanical sources of ephedrine alkaloids contain ephedrine and other sympathomimetics, including norephedrine, pseudoephedrine, and methylephedrine. All of these compounds are pharmacologically active and have variable effects on adrenergic receptors. These variable effects depend on several factors including dosages, route of administration, and individual susceptibility (Ref. 8). For example, in the Hemorrhagic Stroke Project Study, the use of phenylpropanolamine (a sympathomimetic drug) was associated with a statistically significant increased risk for hemorrhagic stroke (Ref. 9) whereas pseudoephedrine was not (Ref. 10). The combination of sympathomimetic compounds may have additional pharmacological effects on the cardiovascular system compared to ephedrine alone and, as a consequence, may have additive risks.
- In previous **Federal Register** notices (47 FR 35344, August 13, 1982; 48 FR 52513, November 18, 1983; and 49 FR 26814, June 29, 1984), FDA recognized the negative consequences of combining multiple sympathomimetic ingredients or a sympathomimetic plus caffeine in the same drug product. In these notices, FDA defined any drug product containing ephedrine in combination with phenylpropanolamine or caffeine as a new drug requiring a new drug application for marketing. At the time, FDA was concerned about the additive effects of the combination of two or more sympathomimetic ingredients without any demonstrated enhanced benefit. FDA has not permitted marketing of OTC drug products containing more than one sympathomimetic drug because of safety concerns.

FDA has received and evaluated adverse reaction reports on both drug products containing ephedrine and dietary supplements containing ephedrine alkaloids. Based on the differences in composition described in the previous paragraphs between the drug products and dietary supplements, adverse event data for dietary supplements containing ephedrine alkaloids may not be completely applicable to OTC ephedrine drug products.

FDA acknowledges that OTC drug products containing ephedrine ingredients may be used by consumers who are obese or have high blood pressure and that these products can cause adverse events. Because sympathomimetic ingredients may pose risks for adverse events, even after a single dose, FDA has considered the benefits and risks associated with the use of these products by these consumers. While OTC ephedrine drug products are not without risk, they have demonstrated benefit for asthmatics in the intermittent and temporary treatment of the symptoms associated with mild asthma. FDA concludes that the benefit from lessening the severity of an asthma attack outweighs the risk of an increase in blood pressure when OTC ephedrine drug products are taken in accordance with a warning to ask a doctor before use if you have heart

disease or high blood pressure and with the recommended dosage.

After reviewing the safety and effectiveness information on ephedrine in OTC drug products, FDA has determined that the benefits of OTC drug products containing single ingredient ephedrine outweigh the risk when the product is used according to labeled instructions. In determining that the benefit outweighs the risk for the marketing of ephedrine in OTC drug products, FDA finds that there continues to be a clinically meaningful benefit derived by asthmatics using these products on an intermittent basis for the temporary relief of bronchospasm. FDA continues to believe that OTC drug products containing single ingredient ephedrine are generally recognized as safe and effective and are not misbranded under the conditions of use in the bronchodilator FM and with the labeling in this proposed rule.

C. Labeling for OTC Bronchodilator Drug Products

Product labeling (indications, warnings, and directions) is important for the safe and effective use of ephedrine OTC drug products. The current and new proposed labeling instructs asthmatics how to use the product correctly in order to minimize risks. Labeling recommends use only for the intermittent treatment of mild symptoms of asthma. Labeling also alerts certain populations with conditions that increase the risk of adverse events to seek advice from a health care provider before using the product. Any deviation from the labeling may put an asthmatic at increased risk for an adverse event and prevent maximum benefit from the drug. For example, if an asthmatic uses an OTC ephedrine drug product on a daily basis over a prolonged period of time because of recurrent symptoms, there are increased risks associated with the long-term use of ephedrine and with inadequate treatment of the asthma condition. The indications, warnings, and directions (including dosage directions) define the conditions of use of the ingredient. If the drug is not used as labeled, the risks may outweigh the benefits of the drug. The proposed new labeling for OTC bronchodilator drug products is intended to inform asthmatics about the safe and effective use of these drug products. The labeling is also intended to inform asthmatics that if their asthma condition worsens, with more frequent or more severe symptoms, they should immediately consult a physician to reassess the management of the asthmatic condition and to consider an alternative drug therapy.

FDA stated in the dietary supplement rule that warning statements cannot adequately protect consumers from the risks associated with dietary supplements containing ephedrine alkaloids (69 FR 6788 at 6828). In this proposed rule, FDA is proposing new warning statements and labeling to minimize the risks associated with taking OTC drug products containing ephedrine ingredients. The difference is based on the favorable benefit-risk ratio associated with the OTC drug products containing ephedrine ingredients for the treatment of mild asthma. Unlike dietary supplements, OTC drug products have demonstrated benefits in the treatment and mitigation of disease. Based on controlled clinical investigations (see § 330.10(a)(4)(ii)), FDA determined that the benefits associated with the use of OTC drug products containing ephedrine for disease indications outweigh the risks and justify the use of these products despite their risks. However, such uses for disease mitigation and treatment are beyond the scope of permissible dietary supplement uses (69 FR 6788 at 6810). FDA considers the OTC drug products containing ephedrine ingredients to be safe and effective and not misbranded for the treatment of physician-diagnosed mild cases of asthma when appropriately labeled, including appropriate warning statements. The FM contains labeling that advises a user of these products:

- Not to use this drug unless a diagnosis of asthma has been made by a doctor,
- Not to use the drug if you have certain medical conditions, and
- To consult a doctor when the drug does not provide relief within a specific time interval or causes side effects that persist.

FDA continues to consider the two types of currently marketed OTC bronchodilator sympathomimetic ingredients, ephedrine and epinephrine, to be safe and effective for the self-treatment of mild asthma. These ingredients have slightly different actions. Oral ephedrine provides less bronchial muscle relaxation but has a more sustained effect than inhaled epinephrine. FDA recognizes that use of OTC epinephrine aerosol drug products to relieve the symptoms of mild asthma may elicit sympathomimetic effects similar to those elicited by oral ephedrine ingredients. Consequently, because of the pharmacological similarities of these two sympathomimetic active ingredients, FDA considers similar labeling of OTC ephedrine and epinephrine drug products necessary to inform consumers of the safe and effective use of these OTC drug products. As previously stated, FDA continues to believe that people with mild asthma can properly use OTC bronchodilator drug products to self-treat occasional wheezing, shortness of breath, and tightness of chest after their asthma has been diagnosed by a physician. FDA has determined, however, that to help ensure safe and effective use and to minimize the risks of OTC bronchodilator drug products, additional labeling is needed for these products.

1. Uses

The current indications for OTC bronchodilator use are in § 341.76(b)(1) and (b)(2). The primary indication is ''For temporary relief of shortness of breath, tightness of chest, and wheezing due to bronchial asthma'' (§ 341.76(b)(1)).

The labeling of the product may also state one or both of the following uses (§ 341.76(b)(2)):

- ''For the'' (select one of the following: ''temporary relief'' or ''symptomatic control'') ''of bronchial asthma.''
- ''Eases breathing for asthma patients'' (which may be followed by: ''by reducing spasms of bronchial muscles'').

Two of these indication statements mention temporary relief, while the third statement does not. Also, in the second statement manufacturers have the option of selecting either ''temporary relief'' or ''symptomatic control.'' For safe and appropriate use, these use statements should inform consumers that these products are to be used for temporary relief of occasional symptoms of mild asthma. Therefore, FDA is proposing to revise the indication statement in § 341.76(b) to a single statement as follows: ''for temporary relief of occasional symptoms of mild asthma: [bullet] wheezing [bullet] tightness of chest [bullet] shortness of breath''.

2. Warnings

a. *Warnings related to effects on the cardiovascular system*. Oral ephedrine has effects on the cardiovascular system (Refs. 11 through 14). Cardiovascular effects include elevation of the systolic and diastolic blood pressure (Ref. 11). Other effects include awareness of heartbeat and rapid heartbeat accompanied usually by some elevation of blood pressure (Ref. 14). Pressor responses are due partly to vasoconstriction but mainly to cardiac stimulation. The force of myocardial contraction is enhanced by the drug,

and cardiac output is augmented, provided venous return is adequate. The renal, abdominal, and intestinal blood flows are decreased; whereas the coronary, cerebral, and muscle blood flows are increased (Ref. 11).

FDA is aware of reported adverse drug events on the cardiovascular system associated with the use of ephedrine-containing drug products. Similar events have been reported for dietary supplement products containing ephedrine alkaloids (69 FR 6788 at 6814 through 6815). The reported adverse events include elevations in blood pressure and/or heart beat, and serious adverse events include abnormal heart rhythm (arrhythmias), heart attack, and stroke. These adverse events are consistent with the known pharmacology of sympathomimetic drugs, as reported in the literature. The reports we have received for ephedrine containing bronchodilator drug products were associated with use that was more frequent or in higher amounts than the labeled dose. However, even at recommended doses, many people have an increased risk for a serious side effect to occur.

Sympathomimetic drugs, including ephedrine ingredients, mimic the effects (stimulation of the sympathetic nervous system) of naturally occurring epinephrine and norepinephrine (Ref. 11). In addition to their direct pharmacological effects, many of these ingredients also stimulate the release of norepinephrine from nerve endings. The release of norepinephrine further increases the sympathomimetic effects of these drugs on the body, at least transiently. Susceptible individuals, who have coronary artery disease or heart failure and use sympathomimetic drugs, are at increased risk for serious adverse events, including heart attack, stroke, and death. Sympathomimetic drugs also can cause abnormal heart rhythms (pro-arrhythmic effect) and can induce cardiac arrhythmias in susceptible individuals, such as those with underlying coronary artery disease, heart failure, or an abnormal cardiac conduction system.

Over longer periods of use, the risk for adverse health effects to susceptible individuals becomes greater due to a sustained elevation in blood pressure. Ephedrine and epinephrine ingredients are expected to, and evidence indicates that they do, have similar pharmacological effects, such as increased blood pressure and heart rate, to those of other sympathomimetic ingredients (Refs. 11 and 12). The pharmacological effects of ephedrine and epinephrine (and other sympathomimetics), both efficacious and adverse, will vary dependent of the dose, route of administration (e.g., oral versus inhaled), and individual susceptibility.

Based on reports that FDA has received, the risk of adverse events from ephedrine can occur at any dosage and may increase when taking a higher dose or taking more frequent doses than at the recommended dosing interval. Therefore, FDA proposes to revise product labeling to inform consumers that use of an OTC bronchodilator drug product can cause an increase in blood pressure and heart rate, which could lead to more serious problems such as heart attack, stroke, and death; and the risks for these problems may increase if the product is taken at higher doses or more frequently than recommended. The labeling also warns consumers against the use of any OTC bronchodilator drug products without a physician's diagnosis of asthma, and directs consumers to consult with a doctor before use, if they have a diagnosis of certain conditions, such as heart disease and high blood pressure.

The proposed labeling for these products has been modified from the labeling in the FM to follow the ''Drug Facts'' format in § 201.66 (21 CFR 201.66). This standardized format and content for product labeling is intended to enable consumers to better read and understand the labeling information and to promote the safe and effective use of OTC drug products. The Drug Facts labeling format provides a more structured, organized, and compact presentation of the proposed labeling information for these products. Accordingly, the proposed labeling should help consumers to use these OTC bronchodilator drug products more safely and effectively.

Current labeling in § 341.76(c)(2) states ''Do not use this product if you have heart disease, high blood pressure, * * *.'' In this proposed rule, FDA is adding the following statements under the heading ''When using this product'': ''[Bullet] increased blood pressure or heart rate can occur, which could lead to more serious problems such as heart attack, stroke, and death. Your risk may increase if you take more frequently or more than the recommended dose. [Bullet] * * * rapid heart beat * * * may occur. If these symptoms persist or get worse, consult a doctor right away.''

b. *Warnings related to effects on the nervous system (central and peripheral).* Ephedrine is known to elicit physiological responses similar to catecholamines (i.e., groups of chemically related neurotransmitters, such as epinephrine, norepinephrine, and dopamine). These drugs have stimulant effects on the sympathetic nervous system and thus are classified as sympathomimetic agents (i.e., agents stimulating the sympathetic nervous system (Refs. 12 and 13)). The central effects of ephedrine and epinephrine ingredients include tenseness, nervousness, tremor, and sleeplessness. The peripheral effects primarily include the effects on the cardiovascular system.

The central nervous system effects appear to limit the maximally tolerated dose, which varies widely among individuals as judged by clinical experience (Ref. 14). Overdose results in exaggeration of the side effects which individuals describe as disagreeable and may help to limit overuse or abuse.

Reported adverse drug events and the known pharmacological data associated with the use of ephedrine and epinephrine ingredients include nervousness, tremor, and seizure. Because of these effects, FDA is proposing to revise product labeling to inform consumers that use of OTC bronchodilator drug products more frequently or at higher doses than recommended may cause adverse effects such as seizure and tremor. Current labeling in § 341.76(c)(5)(ii) states ''Some users of this product may experience nervousness, tremor, sleeplessness * * *. If these symptoms persist or get worse, consult your doctor.'' In this proposed rule, FDA is placing these warnings under the heading ''When using this product'' (§ 341.76(c)(4)(ii)) and adding seizure to this warning to read as follows:

''• nervousness, sleeplessness, * * *, tremor, and seizure may occur. If these symptoms persist or get worse, consult a doctor right away.''

FDA is aware that persons with seizure disorders who use ephedrine are at increased risk for experiencing a seizure (Refs. 15, 16, and 17). Epinephrine ingredients have similar pharmacological effects (Refs. 11 and 12). Therefore, in this proposed rule, FDA is amending the warnings to add ''seizures'' as one of the conditions for which a person should ask a doctor before using OTC bronchodilator drug products.

c. *Warnings related to effects on urination.* Ephedrine and epinephrine ingredients may cause difficulty in urination in males, particularly in older males, who might have an enlarged prostate gland. Current labeling in § 341.76(c)(2) states ''Do not use this product if you have * * * difficulty in urination due to enlargement of the prostate gland.'' In this proposed rule, FDA is simplifying this language under the heading ''Ask a doctor before use if you have'' to read ''* * * trouble

urinating due to an enlarged prostate gland''.

d. *Warnings related to glaucoma*. Current warnings in the monograph for OTC bronchodilator drug products do not include any information about glaucoma. Glaucoma is a group of diseases that are distinguished by an increase in pressure inside the eye. There are two major types of glaucoma: (1) Chronic or primary open-angle glaucoma and (2) acute closed-angle glaucoma (also known as narrow angle glaucoma). Approximately 90 to 95 percent of people with glaucoma have the open-angle variety, while 5 to 10 percent have closed-angle glaucoma (Ref. 18). Normally, aqueous humor (a clear fluid produced within the eye) drains out of the eye through a drainage site. However, in people with narrow angle glaucoma, sympathomimetic drugs (e.g., ephedrine) cause pupil dilatation (mydrasis) that may result in blockage of the normal drainage site (Refs. 18 through 21). Because the fluid within the eye cannot drain properly in these predisposed individuals, the fluid pressure inside the eyeball increases quickly, leading to the symptoms of narrow angle glaucoma (Ref. 19). Therefore, in this proposed rule, FDA is proposing to add ''narrow angle glaucoma'' as one of the conditions under the warning subheading ''Ask a doctor before use if you have''.

FDA considers it beneficial for consumers to know this information and encourages them to ask their physician in order to be fully informed. FDA has previously included this type of information in the labeling of OTC ophthalmic vasoconstrictor drug products containing topically applied ephedrine (21 CFR 349.75(c)(2)).

e. *Warnings related to nausea and loss of appetite*. Ephedrine may cause nausea and loss of appetite in some people. Current labeling in § 341.76(c)(5)(ii) states ''Some users of this product may experience * * * nausea and loss of appetite. If these symptoms persist or get worse, consult your doctor.'' In this proposed rule, FDA is deleting ''nausea'' and ''loss of appetite'' as side effects because they are minor in comparison to other side effects included in product labeling.

f. *Warnings related to interactions with drugs used for psychiatric or emotional conditions*. Current labeling in § 341.76(c)(4) contains a drug interaction precaution not to use an OTC bronchodilator drug product ''if you are now taking a prescription monoamine oxidase inhibitor (MAOI) (certain drugs for depression, psychiatric, or emotional conditions * * *).'' In this proposed rule, to be consistent with the Drug Facts labeling format in § 201.66, FDA is deleting the words ''Drug interaction precaution.'' FDA believes that the information about MAOIs in the labeling may be ineffective because some users of OTC bronchodilator drug products may not know that a drug they are taking is an MAOI. In this proposed rule, FDA is including information about the use of prescription drugs for depression or psychiatric or emotional conditions under the subheading ''Ask a doctor or pharmacist before use if you are''. Therefore, in this proposed rule, FDA is including an additional warning:

''• Ask a doctor or pharmacist before use if you are taking prescription drugs for * * * depression, or psychiatric or emotional conditions''.

g. *Warnings related to interactions with other drugs, foods, and beverages*. FDA is aware that certain other drugs, foods, and beverages can interact with OTC ephedrine and epinephrine ingredients and cause an increased stimulant effect. The drugs include other sympathomimetic agents such as pseudoephedrine, phenylephrine, phenylpropanolamine, and caffeine. Some foods and beverages contain caffeine, and some dietary supplements contain other ingredients reported or claimed to have a stimulant effect.

FDA previously determined that certain combinations of these ingredients presented a potential hazard to health. In the **Federal Register** of August 13, 1982 (47 FR 35344), FDA announced that it had determined that combination drug products consisting of caffeine, phenylpropanolamine, and ephedrine are new drugs and are required to be the subject of an approved new drug application.

A number of sympathomimetic amines have been marketed as prescription drugs used for the treatment of obesity. These include benzphetamine hydrochloride, dextroamphetamine sulfate, diethylpropion hydrochloride, methamphetamine hydrochloride, phendimetrazine tartrate, phentermine hydrochloride and phentermine resin, and sibutramine hydrochloride monohydrate. These sympathomimetic drugs can interact with OTC ephedrine and epinephrine bronchodilator drug products (also sympathomimetics) and cause an increased stimulant effect. Current labeling in § 341.76(c)(3) states ''Do not use this product * * * if you are taking any prescription drug for asthma unless directed by a doctor.'' In this proposed rule, FDA is adding ''obesity'' and ''weight control'' to this warning, which now appears under the subheading ''Ask a doctor or pharmacist before use if you are,'' to read as follows:

''• taking prescription drugs for * * * obesity, weight control * * *''.

Two studies indicate that the stimulant effects of ephedrine increase when combined with caffeine (Refs. 22 and 23). Caffeine is a nervous system stimulant that can induce nervousness, insomnia, and tachycardia (rapid heart rate) (Refs. 24, 25, and 26). FDA is concerned that taking caffeine and ephedrine at the same time may increase sympathetic stimulation of the cardiovascular system and nervous system, e.g., increased heart rate, insomnia, and nervousness. In the **Federal Register** of September 27, 2001 (66 FR 49276), FDA issued a final rule establishing that any oral OTC bronchodilator active ingredient in combination with certain pharmacological drug categories, including any stimulant active ingredient, is not generally recognized as safe and effective and is misbranded for OTC use. FDA stated that it did not believe that any such combination drug products are currently marketed OTC.

Although OTC bronchodilator drug products containing ephedrine ingredients in combination with caffeine are not allowed and are not currently marketed, current labeling of OTC ephedrine drug products does not contain a warning about the concurrent use of products containing caffeine or other ingredients that may have a stimulant effect. FDA considers it essential to warn consumers of the risk of excessive use of ephedrine and epinephrine ingredients from any source or use in combination with other products that have stimulant effects. These products include other sympathomimetic drugs, foods or beverages containing caffeine, and dietary supplements containing ingredients reported or claimed to have a stimulant effect.

In this proposed rule, FDA is proposing to add the following warnings to the FM to address concurrent use of different stimulant products:

• Under the subheading ''Ask a doctor or pharmacist before use if you are'', the statement ''taking any drug that contains phenylephrine, pseudoephedrine, ephedrine, or caffeine (such as for allergy, cough-cold, or pain)''.

• Under the subheading ''When using this product'', the statements ''avoid caffeine-containing foods or beverages'' and ''avoid dietary supplements containing ingredients reported or claimed to have a stimulant effect''.

h. *Other additional warnings*. The FM for OTC bronchodilator drug products contains seven active ingredients (see

section I.B of this document). FDA believes that additional warnings are necessary to inform mild asthmatics of the need to carefully follow the warnings and directions for OTC bronchodilator drug products containing any of these active ingredients. FDA is also concerned that possible serious consequences could develop from excessive use of OTC bronchodilator drug products, or continued use of these products by an asthmatic who needs professional medical attention. Therefore, in this proposed rule, FDA is including additional warnings in § 341.76 for OTC bronchodilator drug products.

FDA considers it necessary to inform mild asthmatics that asthma, if not treated appropriately, can worsen and be life-threatening. To emphasize this concern in this proposed rule, FDA is including the following ''Asthma alert'' warning in § 341.76(c)(5)(i) for ephedrine products:

Asthma alert: Because asthma can be life threatening, see a doctor if you [in bold type]:

- are not better in 60 minutes
- get worse
- need [insert total number of dosage units that equals 150 milligrams] in any day
- use more than [insert total number of dosage units that equals 100 milligrams] a day for more than 3 days a week
- have more than 2 asthma attacks in a week

In this proposed rule, FDA is including the following similar ''Asthma alert'' warning in § 341.76(c)(6)(i) for epinephrine products for use in a hand-held rubber bulb nebulizer, which states:

Asthma alert: Because asthma can be life threatening, see a doctor if you [in bold type]

- are not better in 20 minutes
- get worse
- need 12 inhalations in any day
- use more than 9 inhalations a day for more than 3 days a week
- have more than 2 asthma attacks in a week

i. *New labeling format.* In order to make OTC drug product labeling easier to read and understand, and to help ensure the safe and effective use of all OTC drug products, FDA is revising the current labeling in the OTC bronchodilator FM to conform to the standardized OTC drug product labeling format in § 201.66. This labeling format is included in this proposed rule and requires the use of specific language in the labeling of OTC bronchodilator drug products.

3. Directions

FDA is proposing to revise the directions in § 341.76(d)(1) and (d)(2) to include the statement ''do not exceed dosage'' [in bold type] as the first bulleted statement under the heading ''Directions''. This revision is intended to more prominently inform users of these products not to exceed the recommended dosage.

D. Related FDA Regulatory Actions

FDA has exercised its authority under the act to take regulatory action against OTC bronchodilator drug products containing ephedrine ingredients being marketed directly or indirectly for unapproved uses (e.g., stimulant, weight control, and athletic performance enhancement) via a product name that suggested one of these uses. Since the 1995 proposal, FDA issued warning letters to companies whose products have been linked to significant adverse reactions.

One letter was for a product that contained ephedrine and another ingredient (an expectorant) (Ref. 27). FDA noted that the ''statement of identity'' and ''indications'' portion of the product label state the correct uses. However, the trade name of this product suggested it was intended to aid in weight loss, an unapproved use for these ingredients. FDA stated its belief that because there are serious health risks inherent in the promotion of ephedrine for weight loss, the trade name of the product must be changed in order to ensure that the product is not promoted for the unacceptable weight loss use.

FDA stated in another letter that the product's trade name suggests it is intended for stimulant and recreational use (Ref. 28). FDA had received reports of adverse reactions linked to the use of this product as a stimulant.

FDA requested that these manufacturers take action immediately to correct these violations and stated that failure to do so may result in regulatory action (e.g., seizure and/or injunction). In response to these warning letters, the manufacturers agreed to revise their ephedrine-containing drug product trade names (Refs. 29 and 30).

E. Related DEA Regulatory Actions

In the **Federal Register** of October 11, 1994 (59 FR 51365), DEA issued a final rule eliminating the threshold for single-entity ephedrine drug products. The threshold is an amount of a listed chemical that determines if a transaction such as receipt or sale of the chemical is a regulated transaction under 21 CFR part 1310. The final rule subjected all transactions involving bulk ephedrine and single-entity ephedrine drug products, regardless of size, to the requirements for regulated transactions for listed chemicals under the applicable provisions of the Controlled Substances Act (see 21 U.S.C. 802(39)(A)), which includes recordkeeping, reporting, and notification.

DEA regulations require that in retail settings open to the public where single-entity ephedrine products are sold, such drugs must be stocked behind a counter where only employees have access (21 CFR 1309.71(a)(2)). In addition, each person who sells these products must identify the other party to the transaction by having the other party present documents that would verify the identity (i.e., a driver's license and one other form of identification) and address of the other party (21 CFR 1310.06 and 1310.07(d)). The required recordkeeping includes the date of the transaction, quantity, form of packaging of the ephedrine product, method of transfer (company truck, picked up by customer, etc.), and type of identification used by the purchaser to the regulated person at the time the order is placed (21 CFR 1310.06).

IV. FDA's Tentative Conclusions

A. Summary of Major Labeling Changes

Over the past 28 years since the Panel report was published, updated guidelines for the treatment of asthma have been issued, e.g., ''Guidelines for the Diagnosis and Management of Asthma'' (Ref. 5). The benefits of bronchodilator drug products containing ephedrine or epinephrine as a treatment for mild bronchospasms continue to outweigh their risks. FDA recognizes that some people with asthma have used such products intermittently for many years and obtain a benefit from continued availability. FDA is proposing to update the labeling for these products to provide for safer and more effective use. Based on the available evidence, FDA is proposing to amend the FM for OTC bronchodilator drug products to make the changes set forth in the following paragraphs (sections IV.A.1 through IV.A.3 of this document).

1. Indications

FDA is proposing to revise the indications in § 341.76(b)(1) and (b)(2) to a single indication in the new OTC drug labeling format.

2. Warnings

FDA is proposing to revise the entire warnings section as follows:

- Add an ''Asthma alert'' section that lists four conditions in which the user of the product should see a doctor. This ''Asthma alert'' shall appear as the first statement under the heading ''Warnings'' and parts of the alert shall be in bold type. This new warning replaces the warning previously found in § 341.76(c)(5)(i) for ephedrine ingredients and in § 341.76(c)(6)(ii) for epinephrine ingredients.
- List a number of statements that follow the subheading ''Do not use.'' These statements include the warnings previously found in § 341.76(c)(1), (c)(4), and (c)(6)(iii), where applicable, for products intended for use in a hand-held rubber bulb nebulizer.
- List a number of conditions for which consumers should consult a doctor before using these products under the subheading ''Ask a doctor before use if you have.'' This list includes the conditions previously stated in § 341.76(c)(2), plus several additional conditions.
- List a number of other drugs that people might also be taking at the same time and thus should consult a doctor before using the OTC bronchodilator drug product. This information appears under the subheading ''Ask a doctor or pharmacist before use if you are.'' This list includes prescription drugs for asthma previously stated in § 341.76(c)(3) plus a new list of other drugs that could cause side effects when used in conjunction with ephedrine or epinephrine ingredients.
- List certain information that consumers need to know under the heading ''When using this product.'' This information includes the following:
  - Side effects that may occur (including side effects currently listed in § 341.76(c)(5)(ii)),
  - Information about problems that may occur if the drug is taken more frequently or at a higher than recommended dosage (currently in § 341.76(c)(6)(i) for products containing epinephrine ingredients, and which FDA is now proposing to include for both products containing ephedrine or epinephrine ingredients), and
  - New information about avoiding certain foods and dietary supplements while using an OTC bronchodilator drug product.

FDA considers the new information about the risks associated with an increase in blood pressure and heart rate to be the most important of this information and that consumers' attention should be specifically directed to this information. Accordingly, FDA is proposing that this information appear in bold type as the first statement in this section.

3. Directions

FDA is proposing to revise the directions in § 341.76(d)(1) and (d)(2) to include the statement ''do not exceed dosage'' [in bold type] as the first bulleted statement under the heading ''Directions''.

B. Statement About Warnings

Mandating warnings in an OTC drug monograph does not require a finding that any or all of the OTC drug products covered by the monograph actually caused an adverse event, and FDA does not so find. Nor does FDA's requirement of warnings repudiate the prior OTC drug monographs and monograph rulemakings under which the affected drug products have been lawfully marketed. Rather, as a consumer protection agency, FDA has determined that warnings are necessary to ensure that these OTC drug products continue to be safe and effective for their labeled indications under ordinary conditions of use as those terms are defined in the act. This judgment balances the benefits of these drug products against their potential risks (see § 330.10(a)).

FDA's decision to act in this instance need not meet the standard of proof required to prevail in a private tort action (*Glastetter* v. *Novartis Pharmaceuticals, Corp.*, 252 F.3d 986, 991 (8th Cir. 2001)). To mandate warnings, or take similar regulatory action, FDA need not show, nor do we allege, actual causation. For an expanded discussion of case law supporting FDA's authority to require such warnings, see the final rule on Labeling of Diphenhydramine-Containing Drug Products for Over-the-Counter Human Use (67 FR 72555, December 6, 2002).

V. Proposed Implementation

FDA proposes that the requirements of a final rule based on this proposed rule be effective within 6 months after publication in the **Federal Register** to provide for safe and effective use of OTC bronchodilator drug products at the earliest possible time because of the safety issues involved with the use of OTC bronchodilator drug products. Therefore, on or after 6 months after the date of publication in the **Federal Register** of a final rule based on this proposed rule, any OTC bronchodilator drug product that is subject to the final rule and that contains nonmonograph labeling or packaging may not be initially introduced or initially delivered for introduction into interstate commerce unless it is the subject of an approved application. Any OTC bronchodilator drug product that is initially introduced or initially delivered for introduction into interstate commerce after the effective date of a final rule, and is not in compliance with the regulations, is subject to regulatory action. Further, any OTC drug product that was previously initially introduced or initially delivered for introduction into interstate commerce cannot be repackaged or relabeled with the prior monograph labeling for these products after the effective date of a final rule based on this proposed rule. Manufacturers are encouraged to comply voluntarily with this proposed rule at the earliest possible date.

VI. Analysis of Impacts

FDA has examined the impacts of this proposed rule under Executive Order 12866, the Regulatory Flexibility Act (5 U.S.C. 601–612), and the Unfunded Mandates Reform Act of 1995 (2 U.S.C. 1501 *et seq.*). Executive Order 12866 directs agencies to assess all costs and benefits of available regulatory alternatives and, when regulation is necessary, to select regulatory approaches that maximize net benefits (including potential economic, environmental, public health and safety, and other advantages; distributive impacts; and equity). Under the Regulatory Flexibility Act, if a rule has a significant economic impact on a substantial number of small entities, an agency must analyze regulatory options that would minimize any significant impact of the rule on small entities. Section 202(a) of the Unfunded Mandates Reform Act of 1995 requires that agencies prepare a written statement, which includes an assessment of anticipated costs and benefits, before proposing ''any rule that includes any Federal mandate that may result in the expenditure by State, local, and tribal governments, in the aggregate, or by the private sector, of $100,000,000 or more (adjusted annually for inflation) in any one year.'' The current threshold after adjustment for inflation is $115 million, using the most current (2003) Implicit Price Deflator for the Gross Domestic Product. FDA does not expect this proposed rule to result in any 1-year expenditure that would meet or exceed this amount.

FDA believes that this proposed rule is consistent with the principles set out in Executive Order 12866 and in these two statutes. OMB has determined this rule is a significant regulatory action under the Executive order. The purpose

of this proposed rule is to revise and improve the labeling (add additional warning statements, change the directions, and change the format for the indications) for OTC bronchodilator drug products. The revised labeling is intended to provide consumers more and better information to help ensure the safe and effective use of all OTC bronchodilator drug products that contain these ingredients. This proposed rule amends the FM for OTC bronchodilator drug products and requires relabeling of all products covered by the FM. Potential benefits include safer use of these products by consumers.

FDA's Drug Listing System (DLS) identifies approximately 25 manufacturers/distributors of approximately 40 to 50 OTC bronchodilator drug products. Approximately half of the manufacturers/distributors market single-ingredient ephedrine drug products, and the other half market combination ephedrine/guaifenesin drug products. There appears to be a very limited number of manufacturers/distributors marketing OTC epinephrine solution products. There may be some additional marketers and combination products sold via magazines and the Internet, which are not in the DLS.

A. Relabeling Costs

FDA believes that the proposed relabeling costs of the type set forth in this document generally average about $3,000 to $4,000 per stock keeping unit (SKU) (individual products, packages, and sizes). Assuming that there are about 50 affected OTC drug products in the marketplace, total one-time costs of relabeling would be $150,000 ($3,000 per SKU x 50 SKUs) to $200,000 ($4,000 per SKU x 50 SKUs). Even if there are 20 additional products that FDA is not aware of, total one-time costs of relabeling should not exceed $280,000 ($4,000 per SKU x 70 SKUs). FDA believes that actual costs would be lower for several reasons. First, it is FDA's understanding that most of the label changes will be made by private label manufacturers that tend to use relatively simple and less expensive labeling. Second, FDA has revised the labeling format in this proposed rule based on the OTC drug product labeling format in § 201.66. Therefore, manufacturers will not incur expenses determining how to state the new information in product labeling. Manufacturers, however, may incur some expense to redesign product labeling.

Most of the manufacturers who produce affected products are small entities, using the U.S. Small Business Administration designations for this industry (750 employees). FDA believes that any other unidentified manufacturer of these products is also a small entity. Those manufacturers who must relabel a large number of their products or manufacture a new smaller size package will incur the greatest economic impact.

B. Regulatory Alternatives Considered

Although FDA has rejected this alternative, FDA had proposed in 1995 to amend the FM for OTC bronchodilator drug products to remove the ingredients ephedrine, ephedrine hydrochloride, ephedrine sulfate, and racephedrine hydrochloride and to classify those ingredients as not generally recognized as safe and effective for OTC use. In this proposed rulemaking, FDA considered but rejected several other labeling and packaging alternatives: (1) A longer implementation period, (2) an exemption from coverage for small entities, and (3) less labeling information. FDA does not consider these alternatives acceptable because they do not assure that consumers will have the most recent needed information for safe and effective use of these OTC bronchodilator drug products in a timely manner.

This proposed rule does not require any new reporting and recordkeeping activities. Therefore, no additional professional skills are needed.

There is one other Federal rule that overlaps, but does not conflict with, this proposed rule. DEA regulations (discussed in section III.E of this document) control the distribution of single-entity OTC ephedrine drug products.

This analysis shows that this proposed rule is not economically significant under Executive Order 12866 and that FDA has analyzed regulatory options that would minimize any significant impact of the proposed rule on small entities. Nevertheless, some small entities, especially those private label manufacturers that provide a number of the affected products, may incur significant impacts. Thus, this economic analysis, together with other relevant sections of this document, serves as FDA's initial regulatory flexibility analysis, as required under the Regulatory Flexibility Act.

VII. Paperwork Reduction Act of 1995

FDA tentatively concludes that the labeling requirements proposed in this document are not subject to review by the Office of Management and Budget because they do not constitute a ''collection of information'' under the Paperwork Reduction Act of 1995 (44 U.S.C. 3501 *et seq.*). Rather, the proposed labeling statements are a ''public disclosure of information originally supplied by the Federal government to the recipient for the purpose of disclosure to the public'' (5 CFR 1320.3(c)(2)).

VIII. Environmental Impact

FDA has determined under 21 CFR 25.31(a) that this action is of a type that does not individually or cumulatively have a significant effect on the human environment. Therefore, neither an environmental assessment nor an environmental impact statement is required.

IX. Federalism

FDA has analyzed this proposed rule in accordance with the principles set forth in Executive Order 13132. FDA has determined that the proposed rule does not contain policies that have substantial direct effects on the States, on the relationship between the National Government and the States, or on the distribution of power and responsibilities among the various levels of government. Accordingly, FDA tentatively concludes that the proposed rule does not contain policies that have federalism implications as defined in the Executive order and, consequently, a federalism summary impact statement has not been prepared.

X. Request for Comments

Interested persons may submit to the Division of Dockets Management (see **ADDRESSES**) written or electronic comments regarding this proposed rule and the agency's economic impact determination. Submit a single copy of electronic comments or three paper copies of any mailed comments, except that individuals may submit one paper copy. Comments are to be identified with the docket number found in brackets in the heading of this document and may be accompanied by a supporting memorandum or brief. Received comments may be seen in the Division of Dockets Management between 9 a.m. and 4 p.m., Monday through Friday.

XI. Proposed Effective Date

FDA is proposing that any final rule that may issue based on this proposed rule be effective 6 months after its date of publication in the **Federal Register**.

XII. References

The following references are on display in the Division of Dockets Management (see **ADDRESSES**) under

Docket No. 1995N–0205, unless otherwise indicated, and may be seen by interested persons between 9 a.m. and 4 p.m., Monday through Friday.

1. *Goodman & Gilman's The Pharmacologic Basis of Therapeutics*, 10th ed., edited by J.G. Hardman and L.E. Limbird, McGraw-Hill Co., New York, NY, p. 237, 2001.

2. Chua, S.S. and S.I. Benrimoj, ''Non-Prescription Sympathomimetic Agents and Hypertension,'' *Medical Toxicology*, 3:387–417, 1988.

3. Morgan, P., ''The Role of Vasopressors in the Management of Hypotension Induced by Spinal and Epidural Anesthesia,'' *Canadian Journal of Anesthesiology*, 41(5 Pt 1):404–413, 1994.

4. Boozer, C.N. et al., ''Herbal Ephedra/Caffeine for Weight Loss; A 6-Month Randomized Safety and Efficacy Trial,'' *International Journal of Obesity and Related Metabolic Disorders*, 26:593–604, 2002.

5. ''Guidelines for the Diagnosis and Management of Asthma. National Asthma Education and Prevention Program (NAEPP) Expert Panel Report,'' *National Institutes of Health Publication*, Update on Selected Topics 2002, pp. 3–125, 2002.

6. Naureckas, E.T., and J. Solway, ''Mild Asthma,'' *The New England Journal of Medicine*, 345(17):1257–1262, 2002.

7. The United States Pharmacopeia 28/The National Formulary 23, United States Pharmacopeial Convention, Inc., Rockville, MD, p. 736, 2004.

8. Hoffman, B.B., ''Catecholamines, Sympathomimetic Drugs, and Adrenergic Receptor Antagonists,'' *Goodman & Gilman's The Pharmacologic Basis of Therapeutics*, 10th ed., edited by J.G. Hardman and L.E. Limbird, McGraw-Hill Co., New York, NY, pp. 215–220, 2001.

9. ''Final Report of The Hemorrhagic Stroke Project,'' Comment No. C230, Docket No. 1976N–0052N.

10. Memorandum from Division of Drug Risk Assessment I to Division of OTC Drug Products, dated October 31, 2000.

11. *Goodman & Gilman's The Pharmacologic Basis of Therapeutics*, 10th ed., edited by J.G. Hardman and L.E. Limbird, McGraw-Hill Co., New York, NY, pp. 215–241, 2001.

12. ''Ephedrine (hydrochloride),'' *Therapeutic Drugs*, edited by C. Dollery, Churchill Livingston, New York, NY, pp. 26–29, 1991.

13. *Goodman & Gilman's The Pharmacologic Basis of Therapeutics*, 10th ed., edited by J.G. Hardman and L.E. Limbird, McGraw-Hill Co., New York, NY, pp. 193–253, 2001.

14. Chen, K.K. and C.F. Schmidt, ''Ephedrine and Related Substances,'' *Medicine*, 9:1–117, 1930.

15. Clark, J.E. and W.A. Simon, ''Cardiac Arrhythmias After Phenylpropanolamine Ingestion,'' *Drug Intelligence and Clinical Pharmacy*, 17:737–738, 1983.

16. Bernstein, E. and B.M. Diskant, ''Phenylpropanolamine: A Potentially Hazardous Drug,'' *Annals of Emergency Medicine*, 11:311–315, 1982.

17. Mueller, M. and E.B. Solow, ''Seizures Associated with a New Combination Pick-me-up Pill [Letter],'' *Annals of Neurology*, 11:322, 1982.

18. Koby, M., ''Disease and Disorders,'' *Ferri's Clinical Advisor*, edited by F.F. Ferri et al., published by W.B. Saunders, section 1, 2003.

19. *Goodman & Gilman's The Pharmacologic Basis of Therapeutics*, 10th ed., edited by J.G. Hardman and L.E. Limbird, McGraw-Hill Co., New York, NY, pp. 1821–1848, 2001.

20. Hari, C.K. et al., ''Acute Angle Closure Glaucoma Precipitated by Intranasal Application of Cocaine,'' *Journal of Laryngology Otology*, 113(3):250–251, 1999.

21. Sneddon, J.M. and P. Turner, ''Ephedrine Mydriasis in Hypertension and the Response to Treatment,'' *Clinical Pharmacology and Therapeutics*, 10(1):64–71, 1969.

22. Astrup, A. et al, ''The Effect of Safety of an Ephedrine/Caffeine Compound Compared to Ephedrine, Caffeine, and Placebo in Obese Subjects on an Energy Restricted Diet. A Double Blind Trial,'' *International Journal of Obesity*, 16:269–277, 1992.

23. Toubro, S. et al., ''Safety and Efficacy of Long-term Treatment with Ephedrine, Caffeine, and an Ephedrine/Caffeine Mixture,'' *International Journal of Obesity*, 17(1):S69–S72, 1993.

24. Karch, S.B., ''Other Naturally Occurring Stimulants,'' *The Pathology of Drug Abuse*, edited by S.B. Karch, CRC Press, Boca Raton, FL, pp. 177–198, 1996.

25. ''Analeptics: Caffeine,'' *Drug Interaction Facts and Comparison*, pp. 230–230b, 1996.

26. ''Caffeine,'' *Therapeutic Drugs*, edited by C. Dollery, Churchill Livingston, New York, NY, pp. 3–6, 1991.

27. Letter from B.W. Williams, FDA, to R. Deer, BDI Pharmaceuticals, Division of Body Dynamics, Inc., dated February 24, 1997, coded LET3.

28. Letter from B.W. Williams, FDA, to M. Krassnof, PDK Labs, Inc., dated February 24, 1997, coded LET2.

29. Letter from S. Shapiro, counsel to BDI Pharmaceuticals, to R. Eshelman, FDA, dated March 14, 1997, in OTC Vol. 04BPEA2.

30. Letter from R. Spinello, PDK Labs Inc., to R. Eshelman, FDA, dated March 14, 1997, in OTC Vol. 04BPEA2.

List of Subjects in 21 CFR Part 341

Labeling, Over-the-counter drugs.

Therefore, under the Federal Food, Drug, and Cosmetic Act and under authority delegated to the Commissioner of Food and Drugs, it is proposed that 21 CFR part 341 be amended as follows:

PART 341—COLD, COUGH, ALLERGY, BRONCHODILATOR, AND ANTIASTHMATIC DRUG PRODUCTS FOR OVER-THE-COUNTER HUMAN USE

1. The authority citation for 21 CFR part 341 continues to read as follows:

Authority: 21 U.S.C. 321, 351, 352, 353, 355, 360, 371.

2. Section 341.76 is amended by revising paragraphs (b), (c), and (d) to read as follows:

§ 341.76 Labeling of bronchodilator drug products.

* * * * *

(b) *Indication*. The labeling of the product states the following under the heading ''Use'': ''for temporary relief of occasional symptoms of mild asthma: [bullet][1] wheezing [bullet] tightness of chest [bullet] shortness of breath''. Other truthful and nonmisleading statements, describing only the indication for use that has been established and listed in this paragraph, may also be used as provided in § 330.1(c)(2) of this chapter, subject to the provisions of section 502 of the Federal Food, Drug, and Cosmetic Act (the act) relating to misbranding and the prohibition in section 301(d) of the act against the introduction or delivery for introduction into interstate commerce of unapproved new drugs in violation of section 505(a) of the act.

(c) *Warnings*. The labeling of the product contains the following warnings under the heading ''Warnings'':

(1) The following statements shall appear after the subheading ''Do not use'' [in bold type]:

(i) ''[Bullet] unless a doctor said you have asthma''.

(ii) ''[Bullet] if you are now taking a prescription monoamine oxidase inhibitor (MAOI) (certain drugs taken for depression, psychiatric or emotional conditions, or Parkinson's disease), or for 2 weeks after stopping the MAOI drug. If you do not know if your prescription drug contains an MAOI, ask a doctor or pharmacist before taking this product.''

(2) The following information shall appear after the subheading ''Ask a doctor before use if you have'' [in bold type] ''[bullet] ever been hospitalized for asthma [bullet] heart disease [bullet] high blood pressure [bullet] diabetes [bullet] thyroid disease [bullet] seizures [bullet] narrow angle glaucoma [bullet] a psychiatric or emotional condition [bullet] trouble urinating due to an enlarged prostate gland''.

(3) The following information shall appear after the subheading ''Ask a doctor or pharmacist before use if you are'' [in bold type]:

(i) ''[Bullet] taking prescription drugs for asthma, obesity, weight control, depression, or psychiatric or emotional conditions''.

(ii) ''[Bullet] taking any drug that contains phenylephrine, pseudoephedrine, ephedrine, or caffeine

[1] See § 201.66(b)(4) of this chapter for the definition of ''bullet.''

(such as for allergy, cough-cold, or pain)''.

(4) The following information shall appear after the subheading ''When using this product'' [in bold type]:

(i) ''[Bullet] increased blood pressure or heart rate can occur, which could lead to more serious problems such as heart attack, stroke, and death. Your risk may increase if you take more frequently or more than the recommended dose.'' [statements shall appear in bold type as the first statements under this subheading]

(ii) ''[Bullet] nervousness, sleeplessness, rapid heart beat, tremor, and seizure may occur. If these symptoms persist or get worse, consult a doctor right away.''

(iii) ''[Bullet] avoid caffeine-containing foods or beverages''.

(iv) ''[Bullet] avoid dietary supplements containing ingredients reported or claimed to have a stimulant effect''.

(5) *For products containing ephedrine, ephedrine hydrochloride, ephedrine sulfate, or racephedrine hydrochloride identified in § 341.16(a), (b), (c), and (f).*—(i) The following information shall appear after the subheading ''Asthma alert: Because asthma can be life threatening, see a doctor if you'' [in bold type]:

(A) ''[Bullet] are not better in 60 minutes''.

(B) ''[Bullet] get worse''.

(C) ''[Bullet] need [insert total number of dosage units that equals 150 milligrams] in any day''.

(D) ''[Bullet] use more than [insert total number of dosage units that equals 100 milligrams] a day for more than 3 days a week''.

(E) ''[Bullet] have more than 2 asthma attacks in a week.''

(ii) This ''Asthma alert'' shall appear on any labeling that contains warnings and shall be the first warning statement under the heading ''Warnings''.

(6) *For products containing epinephrine, epinephrine bitartrate, or racepinephrine hydrochloride identified in § 341.16(d), (e), and (g).*—(i) The following information shall appear after the subheading ''Asthma alert: Because asthma can be life threatening, see a doctor if you'' [in bold type]:

(A) ''[Bullet] are not better in 20 minutes''.

(B) ''[Bullet] get worse''.

(C) ''[Bullet] need 12 inhalations in any day''.

(D) ''[Bullet] use more than 9 inhalations a day for more than 3 days a week''.

(E) ''[Bullet] have more than 2 asthma attacks in a week.''

(ii) This ''Asthma alert'' shall appear on any labeling that contains warnings and shall be the first warning statement under the heading ''Warnings''.

(iii) *For products intended for use in a hand-held rubber bulb nebulizer.* The following statement shall also appear after the subheading ''Do not use'' along with the other information in paragraph (c)(1) of this section: ''[bullet] if product is brown in color or cloudy''.

(d) *Directions.* The labeling of the product contains the following information under the heading ''Directions'':

(1) *For products containing ephedrine, ephedrine hydrochloride, ephedrine sulfate, or racephedrine hydrochloride identified in § 341.16(a), (b), (c), and (f).*—(i) ''[Bullet] do not exceed dosage'' [sentence appears as first bulleted statement under ''Directions'' and in bold type].

(ii) ''[Bullet] adults and children 12 years of age and over: oral dose is 12.5 to 25 milligrams every 4 hours as needed, not to exceed 150 milligrams in 24 hours''.

(iii) ''[Bullet] children under 12 years of age: ask a doctor''.

(2) *For products containing epinephrine, epinephrine bitartrate, and racepinephrine hydrochloride identified in § 341.16(d), (e), and (g) for use in a hand-held rubber bulb nebulizer.* The ingredient is used in an aqueous solution at a concentration equivalent to 1 percent epinephrine.

(i) ''[Bullet] do not exceed dosage'' [appears as first bulleted statement under ''Directions'' and in bold type].

(ii) ''[Bullet] adults and children 4 years of age and over: 1 to 3 inhalations not more often than every 3 hours. The use of this product by children should be supervised by an adult.''

(iii) ''[Bullet] children under 4 years of age: ask a doctor''.

Dated: June 30, 2005.

Jeffrey Shuren,

Assistant Commissioner for Policy.

[FR Doc. 05–13709 Filed 7–12–05; 8:45 am]

BILLING CODE 4160–01–S

DEPARTMENT OF DEFENSE

Office of the Secretary

32 CFR 285

[0790–ZA05]

DoD Freedom of Information Act (FOIA) Program (DoDD 5400.7)

AGENCY: Department of Defense.

ACTION: Proposed rule.

SUMMARY: This proposed rule conforms to the requirements of the Electronic Freedom of Information Act Amendments of 1996. It promotes public trust by making the maximum amount of information available to the public, in both hard copy and electronic formats, on the operation and activities of the Department of Defense, consistent with DoD responsibility to protect national security and other DoD interests as provided by applicable law. It also allows a requester to obtain Agency records from the Department of Defense that are available through other public information services without invoking the FOIA.

DATES: Comments must be received on September 12, 2005.

FOR FURTHER INFORMATION CONTACT: Mr. David W. Maier, 703–695–6428

SUPPLEMENTARY INFORMATION:

Executive Order 12866

This proposed regulatory action is not a significant regulatory action, as defined by Executive Order 12866.

Regulatory Flexibility Act of 1980 (5 U.S.C. 605(b))

This proposed regulatory action will not have a significant adverse impact on a substantial number of small entities.

Unfunded Mandates Act of 1995 (Sec. 202, Pub. L. 104–4)

This proposed regulatory action does not contain a Federal mandate that will result in the expenditure by State, local, and tribal governments, in aggregate, or by the private sector of $100 million or more in any one year.

Paperwork Reduction Act of 1995 (44 U.S.C. Chapter 35)

This proposed regulatory action will not impose any additional reporting or recordkeeping requirements under the Paperwork Reduction Act.

Federalism (Executive Order 13132)

This proposed regulatory action does not have Federalism implications, as set forth in Executive Order 13132. It will not have substantial direct effects on the States, on the relationship between the national government and the States, or on the distribution of power and responsibilities among the various levels of government.

Public Law 96–354, ''Regulatory Flexibility Act'' (5 U.S.C. Chapter 6)

It has been certified that this rule is not subject to the Regulatory Flexibility Act (5 U.S.C. 601) because it would not, if promulgated, have a significant economic impact on a substantial number of small entities. This rule implements the Freedom of Information Act (5 U.S.C. 552), a statute concerning

the release of Federal Government records, and does not economically impact Federal Government relations with the private sector.

Section 202, Public Law 104–4, ''Unfunded Mandates Reform Act''

It has been determined that this rule does not involve a Federal mandate that may result in the expenditure by State, local and tribal governments, in the aggregate, or by the private sector, of $100 million or more and that such rulemaking will not significantly or uniquely affect small governments.

List of Subjects in 32 CFR Part 285

Freedom of information.

Accordingly, 32 CFR part 285 is proposed to be revised to read as follows:

PART 285—DOD FREEDOM OF INFORMATION ACT (FOIA) PROGRAM

Sec.
285.1 Purpose.
285.2 Applicability and scope.
285.3 Policy.
285.4 Responsibilities.
285.5 Information requirements.

Authority: 5 U.S.C. 552.

§ 285.1 Purpose.

This part:

(a) Updates policies and responsibilities for the implementation of the DoD Freedom of Information Act (FOIA) Program under 5 U.S.C. 552.

(b) Continues to delegate authorities and responsibilities for the effective administration of the FOIA program and authorize the publication of DoD 5400.7–R,[1] which is the DoD Regulation on the FOIA Program.

§ 285.2 Applicability and scope.

(a) This part applies to the Office of the Secretary of Defense (OSD), the Military Departments, the Chairman of the Joint Chiefs of Staff, the Combatant Commands, the Inspector General of the Department of Defense, the Defense Agencies, the DoD Field Activities, and all other organizational entities in the Department of Defense (hereafter referred to collectively as the ''DoD Components'').

(b) National Security Agency/Central Security Service records are subject to this part unless the records are exempt under 50 U.S.C. 402 note of title 50. The records of the Defense Intelligence Agency, the National Reconnaissance Office, and the National Geospatial-Intelligence Agency are also subject to this Part unless the records are exempt under 10 U.S.C. 424.

[1] This Regulation is codified at 32 CFR part 286.

§ 285.3 Policy.

It is DoD policy to:

(a) Promote public trust by making the maximum amount of information available to the public, in both hard copy and electronic formats, on the operation and activities of the Department of Defense, consistent with DoD responsibility to protect national security and other DoD interests as provided by applicable law.

(b) Allow a requester to obtain Agency records from the Department of Defense that are available through other public information services without invoking the FOIA.

(c) Make available, under the procedures established by DoD 5400.7–R, those Agency records that are requested by a member of the public who explicitly or implicitly cites the FOIA.

(d) Answer promptly all other requests for Agency information and records under established procedures and practices.

(e) Release Agency records to the public unless those records are exempt from mandatory disclosure as outlined in 5 U.S.C. 552.

(e) Process requests by individuals for access to records about themselves contained in a Privacy Act system of records under procedures set forth in DoD 5400.11–R[2] and guidance outlined in this part, as amplified by DoD 5400.7–R.

§ 285.4 Responsibilities.

(a) The Director, Administration and Management (DA&M) shall:

(1) Serve as the appellate authority for appeals to decisions of respective Initial Denial Authorities within the OSD, the Chairman of the Joint Chiefs of Staff, the Combatant Commands, select Defense Agencies, and the DoD Field Activities. The DA&M may delegate this responsibility to an appropriate member of the DA&M or Washington Headquarters Services' staff.

(2) Issue a DoD FOIA regulation and other discretionary instructions and guidance to ensure timely and reasonably uniform implementation of the FOIA in the Department of Defense.

(b) The Director, Washington Headquarters Services, under the DA&M, shall:

(1) Direct and administer the DoD FOIA Program to ensure compliance with policies and procedures that govern the administration of the program.

(2) Internally administer the FOIA Program, inclusive of training, for the OSD, the Chairman of the Joint Chiefs of Staff and, as an exception to DoD Directive 5100.3,[3] the Commanders of the Combatant Commands.

(c) The General Counsel of the Department of Defense shall provide uniformity in the legal interpretation of this Part. The General Counsel shall also ensure that affected legal advisors, public affairs officers, and legislative affairs officers are aware of releases through litigation channels which may be of significant public, media, or Congressional interest, or of interest to senior DoD officials.

(d) The Heads of the DoD Components shall:

(1) Internally administer the FOIA Program and publish any instructions that are not prescribed by this Part or by other issuances of the DA&M which have a major impact on the public. The information specified in Section 552(a)(1) of 5 U.S.C. 552 shall be published in accordance with Administrative Instruction 102.[4]

(2) Ensure that respective chains of command, affected legal advisors, public affairs officers and legislative affairs officers are aware of releases through the FOIA, inclusive of releases through litigation channels, which may be of significant public, media, or Congressional interest, or of interest to senior DoD officials.

(3) Conduct training on the provisions of this part, 5 U.S.C. 552, and DoD 5400.7–R for officials and employees who implement the FOIA.

(4) Submit the Annual Report prescribed in Chapter 7 of DoD 5400.7–R.

(5) Make available for public inspection and copying in an appropriate facility or facilities, in accordance with rules published in the **Federal Register**, the records specified in 5 U.S.C. 552(a)(2), unless such records are published and copies are offered for sale. These records shall be made available to the public in hard copy, by computer telecommunications, or other electronic means.

(6) Maintain and make available for public inspection and copying current indices of all (a)(2) records as required by 5 U.S.C. 552(a)(2)

§ 285.5 Information requirements.

The reporting requirements in Chapter 7 of DoD 5400.7–R have been assigned Report Control Symbol DD–DA&M(A)1365.

[2] Copies may be obtained via Internet at *http://www.dtic.mil/whs/directives/corres/pub1.html.*

[3] See footnote 2 to § 285.3(e).

[4] See footnote 2 to § 285.3(e).

Dated: July 7, 2005.

Jeannette Owings-Ballard,

OSD Federal Register Liaison Officer, Department of Defense.

[FR Doc. 05–13742 Filed 7–12–05; 8:45 am]

BILLING CODE 5001–06–P

ENVIRONMENTAL PROTECTION AGENCY

40 CFR Part 155

[OPP–2004–0404; FRL–7718–4]

RIN 2070–AD29

Pesticides; Procedural Regulations for Registration Review

AGENCY: Environmental Protection Agency (EPA).

ACTION: Proposed rule.

SUMMARY: The Food Quality Protection Act (FQPA) of 1996 amended the Federal Insecticide, Fungicide, and Rodenticide Act (FIFRA) to require periodic review of pesticide registrations to ensure that over time they continue to meet statutory standards for registration. FIFRA section 3(g) specifies that EPA establish procedural regulations for conducting registration review and the goal of the regulations shall be Agency review of pesticide registrations on a 15–year cycle. This proposal describes the Agency's proposed approach to the registration review program. The proposed regulation is intended to ensure continued review of pesticides using procedures that provide for public participation and transparency in an efficient manner.

DATES: Comments must be received on or before October 11, 2005.

ADDRESSES: Submit your comments, identified by docket ID number OPP–2004–0404, by one of the following methods:

- *Federal eRulemaking Portal*:*http://www.regulations.gov/*. Follow the on-line instructions for submitting comments.
- *Agency Website*:*http://www.epa.gov/edocket/*. EDOCKET, EPA's electronic public docket and comment system, is EPA's preferred method for receiving comments. Follow the on-line instructions for submitting comments.
- *E-mail*: Comments may be sent by e-mail to*opp-docket@epa.gov*, Attention: Docket ID Number OPP–2004–0404.
- *Mail*: Public Information and Records Integrity Branch (PIRIB) (7502C), Office of Pesticide Programs (OPP), Environmental Protection Agency, 1200 Pennsylvania Ave., NW., Washington, DC 20460–0001, Attention: Docket ID Number OPP–2004–0404.
- *Hand Delivery*: Public Information and Records Integrity Branch (PIRIB), Office of Pesticide Programs (OPP), Environmental Protection Agency, Rm. 119, Crystal Mall #2, 1801 S. Bell St., Arlington, VA, Attention: Docket ID Number OPP–2004–0404. Such deliveries are only accepted during the Docket's normal hours of operation, and special arrangements should be made for deliveries of boxed information.

Instructions: Direct your comments to docket ID numberOPP–2004–0404. EPA's policy is that all comments received will be included in the public docket without change and may be made available online at *http://www.epa.gov/edocket/*, including any personal information provided, unless the comment includes information claimed to be Confidential Business Information (CBI) or other information whose disclosure is restricted by statute. Do not submit information that you consider to be CBI or otherwise protected through EDOCKET, regulations.gov, or e-mail. The EPA EDOCKET and the regulations.gov websites are ''anonymous access'' systems, which means EPA will not know your identity or contact information unless you provide it in the body of your comment. If you send an e-mail comment directly to EPA without going through EDOCKET or regulations.gov, your e-mail address will be automatically captured and included as part of the comment that is placed in the public docket and made available on the Internet. If you submit an electronic comment, EPA recommends that you include your name and other contact information in the body of your comment and with any disk or CD ROM you submit. If EPA cannot read your comment due to technical difficulties and cannot contact you for clarification, EPA may not be able to consider your comment. Electronic files should avoid the use of special characters, any form of encryption, and be free of any defects or viruses. For additional information about EPA's public docket visit EDOCKET on-line or see the **Federal Register** of May 31, 2002 (67 FR 38102) (FRL–7181–7).

Docket: All documents in the docket are listed in the EDOCKET index at *http://www.epa.gov/edocket/*. Although listed in the index, some information is not publicly available, i.e., CBI or other information whose disclosure is restricted by statute. Certain other material, such as copyrighted material, is not placed on the Internet and will be publicly available only in hard copy form. Publicly available docket materials are available either electronically in EDOCKET or in hard copy at the Public Information and Records Integrity Branch (PIRIB), Rm. 119, Crystal Mall #2, 1801 S. Bell St., Arlington, VA. This Docket Facility is open from 8:30 a.m. to 4 p.m., Monday through Friday, excluding legal holidays. The Docket telephone number is (703) 305–5805.

FOR FURTHER INFORMATION CONTACT: Vivian Prunier, Field and External Affairs Division (7506C), Office of Pesticide Programs, Environmental Protection Agency, 1200 Pennsylvania Ave., NW., Washington, DC 20460–0001; telephone number: 703–308–9341; fax number:703–305–5884; e-mail address:*prunier.vivian@epa.gov*.

SUPPLEMENTARY INFORMATION:

I. General Information

A. Does this Action Apply to Me?

You may be potentially affected by this action if you hold pesticide registrations. Pesticide users or other persons interested in the regulation of the sale, distribution, or use of pesticides may also be interested in this proposed procedural regulation. As such, the Agency is soliciting comments from the public in general. Potentially affected entities may include, but are not limited to:

- Producers of pesticide products (NAICS code 32532)
- Producers of antifoulant paints (NAICS code 32551)
- Producers of antimicrobial pesticides (NAICS code 32561)
- Producers of nitrogen stablilizer products (NAICS code 32531)
- Producers of wood preservatives (NAICS code 32519)

This listing is not intended to be exhaustive, but rather provides a guide for readers regarding entities likely to be affected by this action. Other types of entities not listed in this unit could also be affected. The North American Industrial Classification System (NAICS) codes have been provided to assist you and others in determining whether this action might apply to certain entities. To determine whether you or your business may be affected by this action, you should carefully examine the applicability provisions in proposed § 155.40 of the regulatory text. If you have any questions regarding the applicability of this action to a particular entity, consult the person listed under **FOR FURTHER INFORMATION CONTACT**.

B. How Can I Access Electronic Copies of this Document and Other Related Information?

In addition to using EDOCKET (*http://www.epa.gov/edocket/*), you may access this **Federal Register** document electronically through the EPA Internet under the ''**Federal Register**'' listings at *http://www.epa.gov/fedrgstr/*. A frequently updated electronic version of 40 CFR part 155 is available at E-CFR Beta Site Two at *http://www.gpoaccess.gov/ecfr/*.

C. What Should I Consider as I Prepare My Comments for EPA?

1. *Submitting CBI.* Do not submit this information to EPA through EDOCKET, regulations.gov, or e-mail. Clearly mark the part or all of the information that you claim to be CBI. For CBI information in a disk or CD ROM that you mail to EPA, mark the outside of the disk or CD ROM as CBI and then identify electronically within the disk or CD ROM the specific information that is claimed as CBI. In addition to one complete version of the comment that includes information claimed as CBI, a copy of the comment that does not contain the information claimed as CBI must be submitted for inclusion in the public docket. Information so marked will not be disclosed except in accordance with procedures set forth in 40 CFR part 2.

2. *Tips for preparing your comments.* When submitting comments, remember to:

i. Identify the rulemaking by docket ID number and other identifying information (subject heading, **Federal Register** date, and page number).

ii. Follow directions. The Agency may ask you to respond to specific questions or organize comments by referencing a Code of Federal Regulations (CFR) part or section number.

iii. Explain why you agree or disagree; suggest alternatives and substitute language for your requested changes.

iv. Describe any assumptions and provide any technical information and/or data that you used.

v. If you estimate potential costs or burdens, explain how you arrived at your estimate in sufficient detail to allow for it to be reproduced.

vi. Provide specific examples to illustrate your concerns, and suggest alternatives.

vii. Explain your views as clearly as possible, avoiding the use of profanity or personal threats.

viii. Make sure to submit your comments by the comment period deadline identified.

II. Purpose of the Proposal

With this Proposal, the Agency presents its proposed procedural regulations for the registration review program. The Agency describes:

- Statutory authority and legislative history.
- The Agency's goals for the registration review program.
- Evaluating approaches to registration review.
- Factors considered in designing the registration review program.
- Design options considered for the registration review program.
- Testing the proposed registration review decision process.
- Proposed procedures for registration review.
- Relationship of registration review to other FIFRA activities.
- Phase-in of the registration review program.

The Agency also presents the results of reviews required by statutes and other required analyses.

III. Background

A. Statutory Authority

1. *EPA's authority to license pesticides.* FIFRA section 3(a) generally requires a person to register a pesticide product with EPA before the pesticide product may be lawfully distributed or sold in the U.S. A pesticide registration is a license that allows a pesticide product to be distributed or sold for specific uses under specified terms and conditions. A pesticide product may be registered or remain registered only if it meets the statutory standard for registration given in FIFRA section 3(c)(5), as follows:

(A) its composition is such as to warrant the proposed claims for it;

(B) its labeling and other material required to be submitted comply with the requirements of this Act;

(C) it will perform its intended function without unreasonable adverse effects on the environment; and

(D) when used in accordance with widespread and commonly recognized practice it will not generally cause unreasonable adverse effects on the environment.

FIFRA section 2(bb) defines ''unreasonable adverse effects on the environment'' as:

(1) any unreasonable risk to man or the environment, taking into account the economic, social, and environmental costs and benefits of the use of any pesticide, or (2) a human dietary risk from residues that result from a use of a pesticide in or on any food inconsistent with the standard under section 408 of the Federal Food, Drug, and Cosmetic Act.

The burden to demonstrate that a pesticide product satisfies the criteria for registration is at all times on the proponents of initial or continued registration. (*Industrial Union Dept.* v. *American Petroleum Institute*, 448 U.S. 607, 653 n. 61 (1980); *Environmental Defense Fund* v. *Environmental Protection Agency*, 510 F.2d 1292, 1297, 1302 (D.C. Cir. 1975).

2. *EPA's authority for registration review.* The Food Quality Protection Act (FQPA) of 1996 amended FIFRA to add, among other things, section 3(g), ''REGISTRATION REVIEW,'' as follows:

(1)(A) GENERAL RULE. The registrations of pesticides are to be periodically reviewed. The Administrator shall by regulation establish a procedure for accomplishing the periodic review of registrations. The goal of these regulations shall be a review of a pesticide's registration every 15 years. No registration shall be canceled as a result of the registration review process unless the Administrator follows the procedures and substantive requirements of section 6.

(B) LIMITATION. Nothing in this subsection shall prohibit the Administrator from undertaking any other review of a pesticide pursuant to this Act.

(2)(A) DATA. The Administrator shall use the authority in subsection (c)(2)(B) to require the submission of data when such data are necessary for a registration review.

(B) DATA SUBMISSION, COMPENSATION, AND EXEMPTION. For purposes of this subsection, the provisions of subsections (c)(1), (c)(2)(B), and (c)(2)(D) shall be utilized for and be applicable to any data required for registration review.

B. Legislative History

The Agency examined the legislative history for FIFRA section 3(g) to further its understanding of Congressional intent for this program. A discussion of registration review appears in House Committee Report 104–669, Part One (104th Congress, House of Representatives, Committee on Agriculture, July 11, 1996 to accompany H.R. 1627) which states:

The bill requires the Administrator of EPA to periodically review the registration of each pesticide. It has become apparent that the rapid development of science and the subsequent application of that knowledge in how it impacts human health and the environment is not only important but continuing to evolve. The goal of establishing ongoing scientific look-back procedures will enable the important process of registration review to be considered every 15 years during a product's market life. This creates a continuous reregistration process that both the Agency and the registrant can plan for, rather than creating the need for another complete, resource-intensive reregistration of all pesticide products at one time in the future.

IV. Agency's Goals for the Registration Review Program

A. Review Each Pesticide Every 15 Years to Assure That Each Registration is Based on Current Scientific Knowledge Regarding the Pesticide's Effects on Human Health and the Environment

The science underlying the risk-benefit assessments of pesticides is continually evolving. Research may show hazard endpoints that may not be observable with available methods. Accordingly, the Agency might adopt new methods to assess these endpoints. Models used to estimate exposures may become more accurate as the Agency refines these methods in light of additional data. Risk assessment procedures may be revised to reflect new knowledge regarding mechanism of toxicity, pharmaco-dynamics or pharmaco-kinetics. If the Agency periodically reviews the information and risk assessments for each pesticide consistent with new scientific developments, it can better ensure continued protection of human health and the environment.

B. Develop a Credible and Manageable Program to Review the Registration of All Pesticides Every 15 Years

Using a credible and manageable process, the Agency completes its review of approximately 50 chemical cases a year in the near term.

Credible--using an open and transparent process and basing its findings on sound science, the Agency reaches a regulatory decision for each pesticide in the chemical case.

Manageable--using an efficient and flexible process, the Agency produces 50 decisions per year.

C. Attributes of a Credible Program for Conducting Registration Review

1. *Constructive stakeholder and public participation*. To accomplish this goal, the Agency should have a reliable schedule so stakeholders and the public can decide how best to participate in the review process and to plan their own level of involvement. The Agency should make information available to stakeholders and the public early in the process, i.e., before the Agency has begun its registration review analysis. The Agency should provide opportunities for stakeholder and the public participation at several stages in the process generally at key decision points. For example, the Agency will ask for comment on draft risk assessments and proposed risk mitigation measures. Finally, broad public participation will help the Agency develop effective strategies for communicating pesticide risk to the public.

2. *Transparent decisions based on sound science*. The Agency has published the standards that it uses for characterizing pesticide risk by establishing data requirements and issuing generic guidance regarding its data requirements. Data requirements are codified in 40 CFR part 158. The Agency has also issued guidelines for conducting the tests required in part 158. On a case-by-case basis, the Agency may require data not required under 40 CFR part 158.

It is the Agency's practice to publish generic guidance explaining risk assessment methods. The Agency expects to continue this practice in the future.

The Agency will continue to make decisions using its published standards, policy guidance, and risk assessment methods. The Agency will explain its reasoning when it makes exceptions.

3. *Risk management decisions that protect human health and the environment*. The Agency intends to use States' and Tribes' field, compliance monitoring, and enforcement experience to assess the efficacy and practicality of risk mitigation measures previously adopted to address a risk of concern. When new risks are identified, the Agency will adopt appropriate, effective, and enforceable risk mitigation measures. The Agency's registration review decisions will describe risk mitigation requirements, including time frames and procedures for assuring compliance, among other things.

4. *Timely implementation of risk reduction measures*. Pesticide product labels communicate and put into effect risk mitigation decisions that might be made in a pesticide's registration review. In order to accomplish the Agency's goals of protecting human health and the environment, it is essential that registration review decisions be implemented as soon as practicable. The Agency intends to take prompt action to assure compliance with such requirements. Such actions might include tracking submission and initiating regulatory or enforcement action for failure to comply with requirements.

Because the pesticide product label is the primary means to communicate the safe and legal uses of any pesticide product, the Agency also intends to reduce the lag time between label approval and the commercial availability of products with new labels. The Agency plans to continue to work with stakeholders to improve distribution of updated labels to users.

5. *Accountability*. Registration review decisions should be documented, promptly made available for public review, and remain accessible for future reference. Schedules should be publicly available and updated regularly. The Agency should provide timely and accurate reports on the progress of individual registration reviews and of the registration review process.

6. *Quality assurance and process improvements*. The Agency expects to maintain the quality of its work products. The Agency expects to periodically evaluate its decision processes to improve, for example, the process used to decide the scope and depth of a pesticide's registration review. The Agency expects to evaluate the program to identify vulnerabilities in the registration review process.

7. *Meaningful environmental outcomes*. Under the Government Performance and Results Act, the Agency is required to measure the effectiveness of programs such as the registration review program. To meet this requirement, the Agency will develop measures for assessing the environmental outcomes of the registration review program.

D. Attributes of a Manageable Process for Conducting Registration Review

1. *Promote process efficiencies by applying the knowledge gained through experience with other programs*. For example, in such programs as the reduced-risk pesticide program and the tolerance reassessment program for inert ingredients and other chemicals with low toxicity, the Agency learned to gauge the scope and depth of a pesticide chemical's review. This knowledge should be applied in the registration review process to help the Agency accurately and reliably ascertain which pesticides need intensive review.

2. *Promote process efficiencies through harmonization and work-sharing with other authorities*. The Agency may also be able to achieve efficiencies by harmonizing its data requirements and risk assessment methods with those used by foreign governments, international bodies, or State agencies. The Agency is involved in cooperative work with the Organization for Economic Cooperation and Development (OECD), an intergovernmental organization consisting of 30 industrialized countries in Europe, North America, Asia, and the Pacific, to harmonize pesticide data requirements, focus test guidelines on pesticide regulatory needs, and harmonize industry data submissions and governments' data review formats and content. The OECD's Vision

Document, which outlines the objectives of its harmonization program, specifies that individual countries will continue to conduct their own risk assessments, make their own regulatory decisions, and meet their own legal requirements. In January 2005, the EPA Acting Administrator and his Canadian counterpart announced their commitment to the Vision Document. More information about this harmonization program is available on the Agency's website at *http://www.epa.gov/oppfead1/international/harmonization.htm*.

The Agency may be able to leverage its resources through other work-sharing with its State or international partners. The Agency works with its counterparts in Canada and Mexico under the North American Free Trade Agreement (NAFTA) in the NAFTA Technical Working Group on Pesticides.

Additionally, EPA and the California Department of Pesticide Regulations began in 1999 a workshare program for reviewing residue field studies and assessing dietary exposure to support minor use actions and FIFRA section 18 actions which are of interest to California agriculture. This joint program has benefitted the Federal and State regulatory agencies by shortening the processing time of key pesticide registrations.

3. *Promote efficiencies through improvements in information management systems*. One of the Agency's primary objective is to assemble, develop, and manage the documents needed to conduct the registration review of a pesticide. The objectives are easy access by EPA staff and availability for public review. Agency staff would have electronic access to documents that they will examine during a registration review. The public would be able to access the documents by means of the EDOCKET.

V. Evaluating Approaches to Registration Review

This unit describes the information the Agency gathered and evaluated in developing possible approaches to registration review. First, the Agency evaluated its current programs for assessing the safety of existing pesticides to see whether lessons learned from those programs would apply to registration review. Secondly, the Agency published an Advance Notice of Proposed Rulemaking (ANRPM) (65 FR 24585, April 26, 2000) (FRL–6488–9) to solicit public input on its preliminary interpretation of the statutory requirements and on its initial concept of registration review. In addition, the Agency consulted a stakeholder group regarding the design and implementation of the registration review program. Finally, the Agency conducted a feasibility study to test the decision process that it developed with the advice of the stakeholder group. This feasibility study also provided information the Agency used to estimate the cost of the registration review program to both the regulated community and EPA.

A. Evaluate Experience Gained from Reregistration and Tolerance Reassessment Programs

The registration review program is a brand new program to replace the tolerance reassessment program mandated by section 408 of the Federal Food, Drug, and Cosmetic Act (FFDCA) and the rereregistration program mandated by FIFRA section 4. These programs will be completed in 2006 and 2008, respectively.

The 1988 amendments to FIFRA required the Agency to reregister all pesticides registered before November 1984, prescribed procedures, and established deadlines for accomplishing various activities. In contrast to the 1988 legislation, the 1996 amendment to FIFRA requiring registration review does not specify procedures or deadlines. Nonetheless, the Agency evaluated the reregistration program to see whether any of the procedures used in reregistration could be used in the new program.

1. *Identification of pesticides that were subject to reregistration*. FIFRA section 4(c) required the Agency to publish lists of pesticides that were subject to regregistration. To accomplish this requirement, the Agency developed criteria for deciding whether two or more structurally related active ingredients could be assigned to the same reregistration case. Over the 16–year course of reregistration, the Agency applied new information about the chemical or biological properties of active ingredients assigned to a case when deciding whether to add or remove an active ingredient from a case. The Agency proposes to use the knowledge gained in implementing FIFRA section 4(c) when it creates and maintains a list of pesticide cases that will be subject to registration review.

2. *Applications for reregistration*. FIFRA section 4(d) required registrants to notify the Agency whether they intended to seek reregistration for their products, and if so, to identify the data required by regulation to support the registration of the products, cite the data that the registrant would rely on to satisfy the applicable requirements, and commit to provide studies to satisfy outstanding data requirements that the registrant identified. FIFRA section 4(e) required registrants to summarize and reformat the studies that they intend to rely upon to support reregistration of their products. In developing this proposed rule, the Agency considered whether to adopt similar procedures in registration review, but decided that reliance on the Data Call-In (DCI) authority of FIFRA section 3(c)(2)(B), as required under FIFRA section 3(g), would be sufficient.

3. *Identification of outstanding data requirements (data gaps)*. FIFRA section 4(f) required the Agency to review the registrants' submissions, independently identify data gaps, and issue DCI notices under FIFRA section 3(c)(2)(B) for submission of any outstanding data. The Agency's experience with these aspects of the reregistration program showed that registrants did not always correctly identify the data requirements that applied to their product registrations and that the data registrants intended to rely upon were not always adequate. The Agency identified multiple data gaps for virtually every pesticide in the reregistration program.

Because the Agency made significant effort in the reregistration and tolerance reassessment programs to ensure that data requirements were identified and satisfied with appropriate data, pesticide databases now meet or exceed the standard established in 1984. Although the Agency anticipates that it will identify data gaps for many pesticides in the registration review program, it believes that the scope of the DCI effort in this program will be smaller than that of the reregistration program. The results of an Agency's feasibility study of the proposed registration review decision process supports this expectation.

4. *Quality of the submitted studies*. In the early 1990's, the Agency frequently found that the studies submitted in response to DCI notices did not meet applicable requirements and could not be used to support a risk assessment. Because the Agency was concerned about the delay and expense that accrue when studies must be repeated, it conducted rejection analyses to determine why so many studies were inadequate. Among the outcomes of these analyses were improved guidance for the design, conduct, and reporting of studies.

The Agency believes that improvements in the guidance for designing, conducting, and reporting studies will carry forward into the registration review program. The Agency anticipates that few studies submitted in this program will suffer

from inadequate design, conduct, or reporting.

5. *Late submission of pertinent information*. The Agency found that data and information affecting pesticide exposure and risk were frequently provided after the Agency had drafted its risk assessments. The Agency was obliged to redo the risk assessments. This problem eased somewhat after the Agency began to consult more regularly with stakeholders before conducting the review. The Agency hopes to avoid or minimize this problem in registration review by proposing procedures that would promote early submission of pertinent information.

6. *Complex issues*. A major challenge in the reregistration program was the number and complexity of the issues presented by many of the older pesticides subject to reregistration. Many new studies reported new hazards and raised new questions about the potential risks posed by the pesticide. The Agency often required additional studies to further characterize the risks.

As a result of the work accomplished since 1984 in the registration, reregistration and tolerance reassessment programs, the Agency identified and resolved significant issues regarding human health and the environment. In the short-term, human health issues encountered in registration review are likely to be less complex than those confronted in the reregistration and tolerance reassessment programs. Overall, because scientific knowledge continuously evolves, the Agency will encounter new scientific or regulatory issues arising as the registration review program proceeds.

7. *Public participation in reregistration*. The Agency gained significant experience in stakeholder consultation and public participation processes during reregistration. While not required by FIFRA section 4, the Agency found value in consulting stakeholders before beginning a reregistration review. In particular, such consultation clarified use practice and usage patterns and identified uses that were no longer economically viable. As a result, the Agency was able to reduce the amount of effort and rework required to complete a reregistration eligibility decision.

Public participation is also critical for achieving transparency of the decisions made in the reregistration program. Under procedures adopted in 1998 and formalized in a notice published in the **Federal Register** of May 14, 2004 (69 FR 26819) (FRL–7357–9), the Agency provided an opportunity to review draft preliminary risk assessments. When the Agency released the refined risk assessment, it also provided a document explaining how it had responded to the comments. The Agency also invited public comment on draft risk management decisions.

The Agency has modified its public participation procedures for reregistration so that it can tailor public participation in accordance to the complexity of the issues and the degree of stakeholder interest in the pesticide. Although the public participation process adds to the time frame for making reregistration decisions particularly in complex or controversial cases, the process leads to better decisions and more efficient use of Agency resources. In addition, the public benefits from the transparency and openness of the decision process. For these reasons, the Agency proposes to include ample opportunities for public participation in the registration review process.

8. *Reregistration Eligibility Decision Document*. The Agency found that a highly structured decision document did not always provide flexibility in addressing the range of issues presented by the diverse pesticides that were reviewed in reregistration. In particular, the reregistration report format and the process used to create such reports did not provide flexibility for expediting review of pesticides that pose low hazard and risk. The Agency proposes to incorporate such flexibility in the registration review process and in registration review decision documents.

9. *Scheduling reregistration decisions*. For much of the reregistration program, the Agency did not have published procedures for scheduling completion of Reregistration Eligibility Decisions (REDs). FIFRA section 4(c)(1) provided general guidance for prioritizing reregistration reviews which the Agency accomplished early in the reregistration process when it published lists A, B, C, and D within the mandated time frames. However, the Agency appeared not to have criteria for setting priorities for reviewing pesticides within each list. Later, FFDCA section 408(q) established a 10–year time frame for reassessing tolerances and exemptions. This section generally instructed the Agency to give priority to reviewing tolerances or exemptions that appear to pose the greatest risk to public health. Initially, the Agency did not have schedules for conducting tolerance reassessments.

The Agency now has a priority ranking for reregistration and tolerance reassessment and publishes schedules well in advance. These scheduling procedures provide stakeholders ample opportunity to share information, data, and concerns to aid the Agency in making well-informed and balanced decisions.

The Agency proposes to use chronologically based criteria to establish priority of review and to provide advance notice of registration review schedules. The Agency's experience in reregistration and tolerance reassessment shows that adopting these practices will help the Agency meet its objective of having a predictable and reliable schedule.

10. *Implementing reregistration decisions*. FIFRA section 4(g)(2) specifies procedures for reregistering individual pesticide products. A criticism of this aspect of the program is the lag time between issuance of a RED and the appearance, at the retail level, of products with labeling that put into effect the risk mitigation measures identified in the RED. This issue is significant because the pesticide label is the Agency's chief means of communicating risk management procedures to pesticide users. Because one of the objectives for the registration review program is to ensure timely implementation of risk reduction measures, it is important to develop a process for timely submission and review of pesticide product labels.

B. Advance Notice of Proposed Rulemaking (ANPRM)

The Agency published an ANPRM in the **Federal Register** of April 26, 2000 (65 FR 24585) that presented the statutory requirement for registration review and alerted its stakeholders that the Agency was initiating the development of rulemaking to establish procedures for a registration review program. The Agency explained its preliminary interpretation of the statutory provisions and its preliminary ideas regarding goals, objectives, and how registration review might operate. Soliciting public input on critical issues about registration review early in the planning process helped the Agency to identify potential problems as early as possible.

C. Summary of Comments on the ANPRM

The Agency received eight comments on the ANPRM, primarily from pesticide manufacturers or other persons with commercial interest in the sale or use of pesticides. These comments are available for review in the public docket for the ANPRM under docket control number OPP–36195. The Agency has placed a summary of these comments and EPA's response to the issues discussed in these comments in the docket for this proposed rule.

The four issues that stimulated the most discussion were:

1. *Standard for registration under FIFRA*. Some commenters asserted that compliance with data requirements in 40 CFR part 158 would be sufficient to satisfy the FIFRA requirements for registration. Other commenters advocated that the Agency use a checklist approach to see whether a pesticide continued to meet the FIFRA standard for registration. Commenters agreed that the Agency should use existing data and data reviews and avoidre-review where possible.

2. *Predictable schedules*. Industry commenters generally stated that they sought predictable schedules and advocated using the date of the last comprehensive review as the basis for scheduling a pesticide's registration review. Most asserted that the risk-based priority system described in the ANPRM would not produce a predictable schedule because priority-setting would require too many resources and schedules that rank pesticides by perceived risk would be contentious. Commenters advised the Agency to handle emerging risks such as actions based on information on adverse effects that must be reported under FIFRA section 6(a)(2) information outside of the registration review process.

3. *Public participation*. Most commenters wanted to be able to participate throughout the registration review process. However, some commenters want to limit public participation in various ways. Other commenters acknowledged the value of public participation but cautioned that it could slow down decision-making.

4. *Registrant's role in registration review*. In general, commenters asserted that the Agency should not expect registrants to provide studies or other information unless the Agency specifically requires it.

D. Stakeholder Consultation

After reviewing the issues raised in the comments to the ANPRM, the Agency reconsidered its initial approach to the design of the registration review process. Before issuing a proposed rule, however, the Agency decided to consult with stakeholders to gain additional views on the design of the registration review process. The Agency chose to present its revised approach to the registration review process at a public meeting of the Pesticide Program Dialogue Committee (PPDC) held in Arlington, VA in April 2003.

The PPDC is an advisory committee established in 1995 under the Federal Advisory Committee Act. Its charter was renewed in November 2001 and 2004. This Committee provides a forum for a diverse group of stakeholders to discuss and provide advice to the pesticide program on various pesticide regulatory, policy, and program implementation issues. Topics of discussion at past meetings have included, among other things, implementation of the FQPA.

Membership to the PPDC includes environmental and public interest groups, pesticide manufacturers and trade associations, user and commodity groups, public health and academic institutions, Federal and State agencies, and the general public. The PPDC meets two to three times a year and all meetings are open to the public. Background materials along with a summary of each meeting held to date are kept in a public docket at the Docket facility identified under **ADDRESSES**. Meeting summaries for the PPDC are also available electronically at the following internet address: *http://www.epa.gov/oppfead1/cb/ppdc/*.

In response to the Agency's April 2003 request for stakeholder input into the design of the registration review program, the PPDC agreed to form a workgroup to develop recommendations for the Agency.

In June 2003, the PPDC chartered the PPDC Registration Review Workgroup. The workgroup was composed of 23 members representing a broad and balanced range of interests who were drawn from the PPDC membership and other stakeholders who were not currently serving on the PPDC. Its mission was to develop an assessment of key registration review issues as a basis for the full PPDC to provide EPA advice and recommendations on issues and topics related to developing the Agency's registration review program.

The workgroup held several public meetings and teleconferences during the summer and fall of 2003. At the PPDC meeting in October 2003, the PPDC Registration Review Workgroup presented its recommendations on three topics. The PPDC endorsed these recommendations and asked the workgroup to continue to meet and to present additional recommendations at the spring 2004 PPDC meeting. The PPDC Registration Review Workgroup resumed its deliberations in January 2004. The PPDC endorsed a second set of recommendations at the April 2004 PPDC meeting. Meeting minutes and background information for the workgroup's activities in 2003, including a copy of the October 2003 presentation to the PPDC, may be found in Docket OPP–2003–0252; meeting minutes and background information for the workgroup's activities in 2004, including a copy of the April 2004 presentation, may be found in Docket OPP–2004–0014. You may access these dockets electronically at the following internet address: *http://docket.epa.gov/edkpub/index.jsp*.

E. Summary of PPDC Recommendations

The PPDC considered a number of procedural and implementation issues, as follows:

1. *How should pesticides be scheduled for registration review*? The PPDC took into consideration that approximately 1,200 active ingredients and 15,000 products would be subject to registration review and that new pesticides will be added in the future.

The PPDC recommended that the administrative procedures for scheduling registration review should not be subjective, resource intensive, or time-consuming. There should be a predictable schedule generally based on a date 15 years from the date of registration, reregistration, or other major risk assessment. Specific criteria for departure from scheduling should be established by regulation. The Agency should publish a comprehensive schedule in the **Federal Register** and on the Agency website with regular updates.

The PPDC considered whether scheduling procedures could be based onrisk--''worst first''--but concluded that scheduling procedures based on this criterion would be resource intensive and time-consuming.

2. *Should there be different levels of review*? The PPDC recommended that the degree of assessment not be a ''one-size-fits-all'' process. The workgroup took into consideration that: (a) Not all chemicals pose the same risks; (b) the scope of the program mandates efficient use of resources; and (c) changes in data requirements, database, adverse effects data, science policies, and use and usage profiles could affect the scope or depth of a pesticide's registration review.

The PPDC developed a flow chart for the registration review process that identified points in the review process where the Agency could determine whether further review was needed. Specifically, the process should focus on identifying what has changed since the last review and determining whether existing risk assessments could be used as the basis of a risk-benefit analysis.

The PPDC recommended that the registration review process allow for a streamlined review for pesticides judged to be low risk and for pesticides with a stable regulatory history and science. Pesticides with major complex issues should receive a more comprehensive assessment.

3. *How can meaningful public participation be accomplished*? The PPDC took into consideration that a pesticide's registration review would benefit from early participation by all stakeholders. It noted that stakeholders need a predictable schedule to prepare and participate in registration review and an understandable process where opportunities and expectations for public participation are clear.

The PPDC recommended that the Agency seek stakeholder input regarding use profiles, risk assessments, benefit assessments, risk/benefit analyses, and risk mitigation measures and that stakeholder participation should be commensurate with the level of review. The PPDC recommended that the Agency use modern electronic technology to facilitate stakeholder access to information and asked the Agency to establish and maintain an electronic docket for each pesticide that would include comprehensive information about the pesticide, including history, status, public comments, and all previous regulatory decisions.

4. *How does registration review relate to other pesticide program activities*? Because registration review does not supercede or replace EPA's other authorities under FIFRA, the PPDC recommended that EPA manage risk issues as they arise rather than relying exclusively on registration review for resolving these issues. To the extent possible, registration review should be a safety net to help assure that no risk-related issues have been overlooked.

5. *How should EPA initiate a pesticide's registration review*? The PPDC found that there is no need for a registrant to submit an application for registration review because payment of annual maintenance fees attests to a registrant's willingness to support a pesticide through the registration review process. The PPDC advised the Agency to publish a**Federal Register** notice to initiate a pesticide's registration review. The notice would announce the public availability of the documents that the Agency intends to review in its assessment of the pesticide. During the comment period, registrants and other persons could submit additional information for the Agency to consider during registration review.

6. *How should EPA encourage early submission of test data and other information to support a pesticide's registration review*? Before the Agency begins its assessment, registrants and other stakeholders should be allowed to comment on the information that the Agency had placed in the registration review docket for the pesticide. At this point, stakeholders could submit data and other information that would be pertinent to the review. However, the PPDC noted that registrants need a clear understanding of the Agency's requirements, guidelines, and issues of concern to assess what additional information would be useful. The Agency should explain how the data will be used. When necessary, the Agency should issue DCI notices under FIFRA section 3(c)(2)(B). The Agency should support stakeholder efforts to provide information by providing a framework for communicating information needs and by creating an electronic listserve for use by stakeholders who wish to participate in the registration review.

7. *What is a registration review decision*? The PPDC identified seven potential outcomes of a registration review:

- Registration review concluded—no changes in current registration are needed.
- Registration review concluded—risk mitigation or other action required.
- Registration review concluded—confirmatory data requested.
- Registration review cannot be concluded until additional data are submitted.
- Registration review concluded, but there is ongoing generic DCI or other action—registration review decision may be revisited if necessary.
- Registration review concluded—active ingredient voluntarily canceled.
- Registration review concluded—FIFRA section 6 cancellation or suspension action.

F. Feasibility Study

The Agency conducted a feasibility study to test certain aspects of the registration review decision process that the PPDC recommended. The Agency randomly selected 30 pesticides from among the likely candidates for review in the first 5 years of the program. The Agency assembled data that it would consider in a registration review and then simulated the review and decision process described in the proposed procedures. A detailed description of this study is presented in the economic analysis for this proposed regulation. A copy of the economic analysis is available in the public docket for this proposed regulation. Unit VIII. of this preamble describes how the Agency used the study to learn how the proposed registration review decision process might work and to identify aspects of the proposed process that need further development.

VI. Factors Considered in Designing a Registration Review Decision Process

A. Pesticides Subject to Registration Review Should Have Already Met the Data Requirements for Registration Established in 1984

Registration decisions made since 1984 and reregistration decisions made since 1988 are based on data requirements and risk assessment methods that were current at that time. In addition, by August 2006, the Agency will complete tolerance reassessment to assure that pesticides with food uses meet the requirements of FFDCA section 408 with respect to human health risks from aggregate and cumulative exposures. In general, the Agency believes it will not be necessary to redo reviews of studies because it has already determined that studies supporting current registrations meet requirements established in 1984.

B. FQPA Requirements Have Transformed Pesticide Risk Assessment into a Dynamic and Iterative Process

Before FQPA, EPA considered the incremental dietary risk posed by each new use and generally did not reexamine risk from existing uses. When establishing a tolerance for a new food use, the Agency now must conduct a new assessment of aggregate non-occupational exposures and assess cumulative risk, if necessary, using the most recent procedures for conducting such assessments. This assessment would update the non-occupational human health risk assessment performed during tolerance reassessment and would provide the Agency another opportunity to evaluate previously approved uses. Accordingly, the non-occupational human health risk assessments for some pesticides may be updated during the 15–year registration review cycle as a result of the review of any applications for new uses.

C. Emerging Serious and Urgent Risk Issues Will Be Identified, Characterized, and Managed as They Arise and Generally in Processes Other than Registration Review

It is the Agency's practice to investigate reports of pesticide incidents or findings of adverse effects as expeditiously as possible. The Agency intends to continue this practice.

VII. Design Options for Registration Review

This unit describes and evaluates options for various aspects of a registration review program. The program aspects discussed in this unit are:

- What should be the unit of review?
- How should the Agency account for inert ingredients in registration review?
- How should the Agency schedule pesticides for review?
- What event should be used as the basis for developing a chronological schedule?
- What approach should the Agency use in conducting the review?
- What is the optimal way to assemble the materials that the Agency will consider in its review?
- How should review of individual product registrations be managed in registration review?
- How should the Agency communicate the results of the registration review?

A. What Should Be the Unit of Review?

The statute requires the Agency to review ''the registrations of pesticides,'' but did not further describe in FIFRA section 3(g) the unit of review. Accordingly, the Agency must determine the unit of review for the purpose of this program. The Agency has identified the following three options: (1) Individual pesticide products; (2) individual active or inert ingredients; or (3) registration review cases composed of chemically related active ingredients and the products that contain one or more of these ingredients. For the reasons discussed in this unit, the Agency is proposing to use the third option and review registration review cases in the registration review program. This is reflected in proposed § 155.42 of the regulatory text.

1. *Review each product separately*. Under longstanding practice, EPA bases its decision to register a product on its assessment of the hazard characteristics of the active ingredient in the product (and its metabolites and degradates) and the risk posed by potential exposures to these substances that would result from the proposed uses of the product. The Agency also considers the possible benefits from the proposed uses of the pesticide. The Agency makes its registration decisions on a pesticide chemical and then applies this decision to a pesticide product.

Under this option, the Agency would conduct a risk assessment on each individual product. Such an assessment would not be a complete assessment of the exposure to the active ingredient(s) in the product because it does not consider exposures from other products that contain the same active ingredient(s). Accordingly, this approach might not be scientifically sound and might not meet FIFRA requirements.

2. *Review of pesticide ingredients*. The Agency currently makes decisions on ingredients and applies them to products. Comments on the ANPRM agreed that the unit of review should be a pesticide ingredient. Congress intended that EPA review a pesticide's registration in light of advances in science (i.e., data and other information relating to hazard, exposure, and risk). Because ''science'' is generally developed on a generic basis, the Agency believes conducting registration review on ingredients would be consistent with Congressional intent. However, a product that contains multiple active ingredients could belong in two or more cases and could undergo registration review more than once in a 15–year cycle. The Agency believes that the statute does not preclude the Agency from reviewing a pesticide product more than once in a 15–year cycle.

3. *Review of chemical cases that include one or more structurally similar pesticide ingredients and the products that contain these ingredients*. Under FIFRA section 4, the Agency established reregistration cases that contain either a single active ingredient or two or more structurally related active ingredients. In the reregistration program, the Agency uses data on one member of the case to support other members of the case. Significant resource savings are achieved when chemically related pesticide ingredients are grouped in the same chemical case and are reviewed together. Decisions made on the active ingredients would apply to products in the case. The Agency finds that because FIFRA section 3(g) does not stipulate the unit of review, the Agency may continue its current practice of forming cases consisting of one or more active ingredients and the products that contain these ingredients. The Agency believes that this unit of review is consistent with Congressional intent that a pesticide be reviewed in light of advances in science, which are developed generically. As stated in Unit III.A., a product that contains multiple active ingredients could belong in two or more cases and could undergo registration review more than once in a 15–year cycle.

B. How to Account for Inert Ingredients in Registration Review?

When the Agency evaluates an application to register a pesticide product, it examines the product's composition and product-specific toxicity data as part of its consideration of the potential risks posed by the product. Accordingly, the Agency believes that a review of a pesticide's registration must include a consideration of the inert ingredients as well as the active ingredients in the product.

Options for managing the review of inert ingredients include:

1. *Option 1--Establish registration review cases for inert ingredients*. Such cases would be composed of one or more inert ingredients and the products that contain the ingredient(s). The Agency would conduct either a comprehensive review of each inert ingredient, as is being done for active ingredients in reregistration or tailor the scope and depth of the review, as is being proposed for the registration review of active ingredients.

2. *Option 2--Review individual inert ingredients in a process that is separate from registration review*. During registration review, examine product composition to assure that any inert ingredient used in the product has been cleared for use in pesticides, and, if the pesticide is used on foods, to assure that a tolerance or tolerance exemption for the chemical has been established and reassessed.

The Agency may establish a program for periodically reevaluating inert clearances, tolerances, or tolerance exemptions. If the Agency does so, it would be able to use this new information in the registration review program. During a pesticide's registration review, the Agency would review the composition of a product and then check to see whether there are issues of concern associated with any of the inert ingredients in the product.

3. *Option 3--Focus on product hazards rather than reviewing individual inert ingredients*. After making findings on the active ingredients, base an assessment of the safety of end-use products upon a review of the product's acute toxicity data without separately considering each inert ingredient in the product.

The Agency proposes to adopt option 2. It would not establish registration review cases for inert ingredients as would be done under option 1. Safety of inert ingredients will continue to be evaluated in a separate process. During registration review, the Agency will check to see whether there are any issues concerning the inert ingredients in a product that is undergoing registration review. This approach would produce product assessments that reflect current knowledge about the ingredients in the product. Additionally, the PPDC registration review workgroup endorsed this approach.

The Agency believes that option 1, conducting a registration review of inert

ingredient registration review cases, could support the Agency's goals regarding sound science. However, the Agency believes that this approach would not be practical and may not be appropriate. For example, the procedures proposed for establishing registration review cases, such as the proposed criteria for establishing the baseline date for a registration review case, would not work well for inert ingredients because it is often difficult to determine when registrants began to use an inert ingredient in registered products. Other proposed procedures, such as public identification of the products that belong in a registration review case, would not be appropriate for a registration review case composed of inert ingredients. Registrants consider the identity of the inert ingredients in their products to be trade secret, so the Agency must not disclose the products that belong in an inert ingredient registration review case. Thus, the Agency finds that it may not be practicable to establish a chemical case for an inert ingredient when it is not possible, for trade secret reasons, to identify products belonging to the case. The PPDC identified additional issues with this approach. It believes that because inert ingredients are ''cleared'' for use in pesticides and not registered, they are not subject to registration review. Accordingly, they believe it would be inappropriate to establish registration review cases for inert ingredients.

The Agency believes that option 3, basing a product's registration review on acute toxicity data rather than on a review of individual inert ingredients, might not meet Agency goals relating to efficient use of resources and sound science. Review of product-specific acute data is unlikely to provide insight into potential hazards posed by chronic or repeated exposure to the inert ingredients in a pesticide product. Because such a review may not provide new understanding of the potential hazards posed by a product, the review would not be an appropriate use of Agency resources.

C. Approaches for Scheduling Registration Review Cases for Review

The Agency believes that an optimal scheduling approach would enable the Agency to meet the following goals:

- Achieve a 15–year review cycle with a predictable and reliable registration review schedule (emphasized in ANPRM comments).
- Set schedules for review that promote protection of human health and the environment.
- Promote efficient use of resources to develop and implement the schedule and provide flexibility for managing the registration review caseload.
- Be perceived as fair and objective. For example, avoid stigmatizing a pesticide by alleging that concern for the pesticide's potential risk warrants scheduling its registration review early in the registration review cycle (emphasized in ANPRM comments).

The Agency has evaluated three basic approaches to scheduling registration reviews:

(1) Chronological. Commenters on the ANPRM and PPDC Registration Review Workgroup recommended scheduling registration review based on the date of the last comprehensive review.

(2) Risk-based ''worst first.'' Under the Agency's ''initial concept'' published in the 2000 ANPRM, registration reviews would be scheduled on the basis of known or suspected risk.

(3) Random. Use randomizing procedures to develop a schedule for registration review.

Under the proposed procedures, any of these approaches could be modified to address the need to revise a pesticide's registration review schedule to balance workload (both EPA's and industry's), group related cases together, or to achieve process efficiencies, among other things.

Because FIFRA does not prescribe any approach to scheduling registration review, all of the scheduling approaches would be consistent with FIFRA section 3(g), as long as they are implemented in a way that strives to attain the 15–year review goal. For the reasons given in this unit, the Agency proposes to base its schedule on option 1. This is reflected in proposed § 155.44 of the regulatory text.

1. *Chronological, based on date of registration or reregistration.* This approach has the advantage that after initial effort to ascertain registration or reregistration dates, this schedule could be constructed and maintained with minimal resources. Because the criteria for scheduling are objective, a chronological listing of pesticides would not stigmatize any pesticide. The Agency would be in a better position to achieve the 15–year review of each pesticide's registration with this scheduling scheme than with a risk-based scheduling scheme because, in any given year, this approach is likely to produce a mix of heavy and light registration review cases.

The date of a pesticide's registration or reregistration may be a general indicator of potential risk in that older pesticides could potentially have data gaps, outdated risk assessments, and unrecognized risks. Previously unrecognized risks from older pesticides could be identified earlier in a registration review program using this scheduling scheme than one which uses a scheduling scheme based exclusively on risk potential. The Agency's feasibility study described in Unit VIII. showed that older pesticides often lacked assessments that have become routine in the last 8 years or so, such as ecological, occupational, and residential risk assessments. Accordingly, the Agency believes that the date of the last comprehensive review is a reasonable indicator for potential risk.

As discussed in Unit VI.A., the Agency will have performed a comprehensive review on all pesticides that will undergo registration review and will have determined that all pesticides meet, at a minimum, standards established in 1984. In the last 5 years or so, the Agency used its most up-to-date methods to evaluate high risk pesticides. The Agency made regulatory judgments about the acceptability or reasonableness of the risks posed by these pesticides. The public health or environmental benefit of reviewing these pesticides early in registration review would be marginal because the Agency's understanding of the risks or the societal benefits of the pesticides probably would not change much since the Agency's last evaluation of the pesticides.

However, without appropriate modification, a strictly chronological approach lacks flexibility to group related pesticides or balance the workload. Moreover, because risk factors such as hazard or exposure are not included in a chronological schedule, registration review of pesticides with known or suspected risks might occur later than registration review of pesticides that pose less risk.

In proposing this approach, the Agency recognizes that, in order to protect human health and the environment, it must rely on other procedures for identifying, assessing, and managing new risks from existing pesticides.

2. *Risk-based, relying on exposure, hazard, or other recognized expression of risk.* This approach has the advantage of early review of pesticides that are recognized to have greater potential to pose risks of concern. Additionally, pesticides with similar risks are likely to be scheduled for review at approximately the same time. Grouping such pesticides for review would promote efficient use of resources.

However, identifying and describing the risk criteria to be used in prioritizing pesticides could be controversial and

difficult. For example, should the criteria give greater weight to carcinogenic potential than to potential developmental toxicity? It would be difficult to make such judgments in an objective way. Furthermore, applying risk criteria to generate a schedule would be extremely resource intensive because of the effort needed to develop criteria, see whether each pesticide in the registration review caseload meets the criteria, and to apply a scheme for ranking pesticides that meet the criteria. The resulting schedule might be challenged by stakeholders who believe that particular pesticides should be placed higher or lower on the schedule.

As risk-based priorities change over time, the schedule would need to be modified repeatedly to advance some cases and defer others. Because the schedule would be ''front-loaded'' with the most difficult and time-consuming cases, the Agency would be less likely to stay on schedule and meet the statute's goal of reviewing each pesticide's registration every 15 years.

As described in Unit VIII.B., the feasibility study showed that older pesticides often lacked assessments that have subsequently become routine. When the Agency performs such assessments during a pesticide's registration review, it may find risks that it had not recognized before. Under the risk-based approach for scheduling registration review, the Agency might not review an older pesticide until later in the cycle and, as a result, the Agency would discover any unrecognized risk associated with the pesticide later than it might have under another approach.

3. *Random assignment*. The sole advantage of this approach is that the criteria are completely objective and incontrovertible. This scheduling approach would require the least resources. The schedule would be predictable and easily ascertainable. However, because no indicators of potential risk would be taken into account when developing a schedule, the public would not receive the public health or environmental protection benefits associated with the other approaches.

D. Establish a Baseline Date for Each Registration Review Case

Since the Agency is proposing to schedule registration review on a chronological basis, it must decide what event or events should be used to establish a baseline date for each registration review case. The options include: (1) Registration date of oldest product in the case or date of reregistration whichever is later; or (2) date of latest registration action.

Option 1 would list in chronological order pesticides registered or reregistered after the November 1984 effective date of the Agency's data requirements for pesticides. Under this option, the Agency would give priority to pesticides with the oldest post-1984 data.

Under option 2, the Agency would use the date of the most recent approval of a new use as the basis for scheduling the review. The disadvantage of this approach is that the review of the new use would have focused on the exposures that would result from the proposed new use and might or might not have led to a comprehensive review of the pesticide. Although aggregate exposure from all dietary and non-occupational exposures might have been assessed in the review of the new use, occupational or ecological risks from earlier registration actions might not have been considered.

The Agency believes that registration review schedules should generally provide for reviewing the oldest decisions first to see whether the pesticide continues to meet current standards for registration. The Agency proposes to use the earliest post-1984 registration or reregistration decision as the initial basis for scheduling registration reviews. The Agency proposes to use the date of the latest registration review as the basis for scheduling subsequent registration reviews. This is reflected in proposed § 155.42 of the regulatory text.

For the purpose of registration review procedures, the Agency must decide which event constitutes ''reregistration.'' The options include: (1) Signature date of the Registration Eligibility Decision (RED) or Interim Registration Eligibility Decision (IRED); (2) date of issuance of DCI notices for product-specific data and labels specified in the RED; and (3) date of approval of submitted labels. The Agency prefers the signature date of the RED or IRED because this is the date of the latest comprehensive risk assessment of the pesticide. Other events in the reregistration process might not be useful as a baseline date. For example, the date of the DCI notice for product-specific data is significant for compliance purposes and the label approval date signifies the completion of regulatory action in the reregistration process.

The Agency must also decide what should be the baseline date for reregistration cases for which REDs or IREDs have not been completed by the time the registration review program begins. The Agency could use either the date of initial registration or the projected date of the registration eligibility decision as a baseline date or it could wait until reregistration is completed before establishing a baseline date. The Agency believes it is simpler and more practical to wait until it issues a reregistration decision before establishing a baseline date for such cases. Consequently, the initial list of registration review cases would not include baseline dates for such cases.

E. Approaches for Conducting a Pesticide's Registration Review

The Agency has identified three approaches for conducting a pesticide's registration review: (1) A comprehensive approach modeled on reregistration; (2) a checklist approach suggested in comments on the ANPRM; and (3) a tailored approach where the scope and depth of the review are tailored to the circumstances of the registration review case. Variations of a tailored approach to registration review were presented in the Agency's initial concept described in the ANPRM, the revised concept that the Agency presented to the PPDC in 2003, and the approach recommended by the PPDC.

In evaluating these approaches, the Agency finds that the comprehensive approach and the checklist approach do not satisfy the Agency's policy objectives. The underlying assumption in the comprehensive approach is that existing risk assessments and the studies upon which they are based do not meet current standards. The studies must be reviewed again and replaced if necessary and the risk assessments must be redone. This process would redo the work performed in registration and reregistration without significantly adding value. Accordingly, this approach would not satisfy the objective of avoiding unnecessary rework. Because a comprehensive review is likely to be resource-intensive and time-consuming, the Agency would not be able to complete reviews within a 15–year cycle. Under the comprehensive approach, the Agency also would not be able to provide review decisions and impose data requirements on a predictable schedule.

The checklist approach also would not meet the Agency's objectives for a registration review process. Because this approach does not address the adequacy of existing risk assessments, it might not reveal risks that could be discovered if new risk assessments were performed. This approach would not address deficiencies in previously accepted data or changes in policy or assessment methods. In successive 15–year cycles, the original risk assessments would fall further behind the standards of the day.

Also, this approach does not include an assessment of new information that could affect the risk assessment. Accordingly, a decision based on such a review would not be based on sound science. Furthermore, under this approach, the Agency might not review new use or usage or other information on benefits that could affect the risk/benefit assessment for the pesticide.

As a practical matter, it would be extremely difficult for the Agency to develop a core assessment scheme, as suggested in comments on the ANPRM, that would apply to all pesticide products. The Agency has always made case-by-case decisions on pesticides and expects to continue to do so. For these reasons, the Agency believes that a checklist approach might not meet the requirements of FIFRA section 3(g).

The tailored approach differs from the other approaches in that scope and depth of the review would be commensurate with the complexity of the issues presented by the pesticide. The scope/depth decision and any accompanying DCI notice that might be needed is a critical output of the registration review process. By using a tailored approach, the Agency believes it will be able to make such decisions on approximately 1/15th of the total registration review workload each year. As a result of registration activity that will continue to occur during the 15–year registration review cycle, the Agency will receive new data and conduct new risk assessments for many pesticides. The Agency expects that the scope/depth decision that the Agency would make as part of registration review is likely to show that very little additional work would be needed to complete the registration review for such pesticides, at least in regard to non-occupational human health assessments.

The Agency finds that an approach that tailors the scope and depth of a pesticide's review according to the circumstances of each case is more likely to meet the Agency's goals than the alternative approaches. Accordingly, in § 155.53 of the regulatory text, the Agency is proposing this approach for the conduct of registration review.

F. What is the Optimal Way to Assemble the Materials That the Agency Will Consider in its Review?

For example, should the Agency require registrants to submit registration review applications that include or cite material for the Agency's consideration? Alternatively, should the Agency identify and assemble the material it will consider in its review? Or should the Agency and stakeholders work together to prepare for a pesticide's registration review?

1. *One option for assembling material to be considered in a pesticide's registration review would be to adopt procedures used in reregistration.* As discussed in Unit V.A.2., FIFRA section 4(d) required registrants to notify the Agency whether they intended to seek reregistration for their products, identify the data required by regulation to support the registration of the products, and the studies that satisfy the applicable requirements, and commit to provide studies to satisfy data gaps that they identified. In addition to the notification requirements in FIFRA section 4(d), FIFRA section 4(e) required registrants to summarize and reformat previously submitted studies that they intended to rely upon to support reregistration of their products.

In the ANPRM, the Agency raised the possibility of requiring registrants to submit a registration review application. The registration review application could indicate which uses the registrant intends to support, identify applicable data requirements, and cite the studies used to satisfy these requirements. The registration review application could include additional information and data on the pesticide that has not already been submitted. The Agency hypothesized that requiring registrants to assemble information needed in the review could save the Agency's resources.

Comments to the ANPRM did not object to the idea of requiring registration review applications. In fact, several comments supported the idea and made suggestions regarding the required contents of a registration review application.

However, the PPDC believed that a requirement to submit registration review applications would be burdensome to registrants. Members of the PPDC stated their belief that registrants should not be required to identify data and other information they have already submitted and that the Agency has already accepted to support a pesticide's registration.

The Agency believes that administering a registration review application process could be quite resource intensive. The Agency would have to identify who is required to submit an application, notify them of the requirement, verify receipt of such notification, track submissions, and process submitted registration review applications. Additionally, the Agency would have to follow-up when a registrant fails to submit an application as required.

The Agency has considered the burden that requiring a registration review application would impose on registrants and the costs the Agency would incur to process such applications and finds that these costs outweigh the possible benefits of such a requirement. Accordingly, the Agency will not propose to require registration review applications.

2. *The Agency might decide to base the scope/depth decision on a review of the material it has on hand.* This may be sufficient in some cases, particularly for pesticides that pose minimal risk and for which there appears to be no information that would cause the Agency to reconsider its previous registration decision. However, the feasibility study showed that in many cases, early input from registrants or other stakeholders could help clarify the Agency's understanding use practices. Accordingly the Agency will not propose to forgo public participation at this stage of registration review.

3. *In comments on the ANPRM and in public meetings, stakeholders expressed their need to participate in the registration review process before the Agency makes a scope/depth decision.* The Agency agrees that stakeholder input early in the process could improve the quality of the scope/depth decision and improve the efficiency of the review process. The Agency might also use submitted information when it conducts any new risk assessment that might be needed.

The PPDC has developed a number of recommendations as to how to manage various aspects of stakeholder participation at this stage--assembly of information for the registration review--such as:

- Advance notice of schedules so stakeholders can plan.
- Early consultation to clarify pesticide use and usage patterns.
- Early determination by Agency of data or information that might be useful in refining exposure assessments.
- Early determination of outstanding data requirements so that DCI notices can be sent out and studies required to be submitted in time for use in the registration review.

The Agency is proposing in § 155.50 of the regulatory text to provide opportunity for stakeholder participation in the information assembly stage of the process.

G. Managing the Registration Review of Individual Products

Consideration of individual products could occur at various stages of registration review. Before initiating a registration review, the Agency would

examine some or all product labels to ascertain the uses of the pesticide.

There are approximately 15,000 registered pesticide products subject to registration review. However, the Agency does not believe it is practical to conduct a comprehensive review of the composition, labeling, and product-specific data for each product. Clearly, it is necessary to assure that specific product labeling is consistent with the risk assessment regarding use directions and precautionary statements. Because pesticides undergoing registration review were registered or reregistered after 1984, the Agency expects that many pesticide products currently display up-to-date labels. As a result of reregistration, the current generation of product labels conform to labeling policy and are adequately supported by appropriate product-specific data. As discussed in Unit VII.B., the Agency would review a product's composition to confirm that the inert ingredients in the product have appropriate clearances for use in the product. The Agency might conduct a detailed review of a product if there are circumstances, such as a product registration that had not been amended in many years, that indicate that a review might be warranted.

The Agency expects to involve stakeholders in its decision regarding the scope and depth of product review in registration review. As described in Unit IX.I., the Agency will establish a docket for information that it intends to consider in a pesticide's registration review. This information may include product labels. Images of product labels are already available to the public on the Agency's website at: *http://www.epa.gov/pesticides/pestlabels/*. When commenting on the information in a pesticide's docket, stakeholders may advise the Agency of any issues that they have identified regarding the registration of products in the case, based on their own assessment of the information in the docket, and describe what they believe should be the scope and depth of the Agency's review of the products in the case.

H. Communicating the Results of a Registration Review

FIFRA section 3(g) does not specify how the Agency should communicate the results of a registration review to pesticide registrants or the public. The options range from publication of a comprehensive review document, modeled on the RED used in the reregistration program, to private communication with individual registrants, as is the current practice when the Agency reviews applications for registration actions. In order to satisfy its objectives for an open and transparent registration review process, the Agency believes that it should release to the public the results of the review of each registration review case and that the public should have the opportunity to comment on the Agency's draft conclusions before a decision regarding a pesticide's registration review becomes final.

VIII. Feasibility Study: Testing the Proposed Registration Review Decision Process

A. Design and Conduct of the Feasibility Study

The Agency conducted a feasibility study to test certain aspects of the decision process described in this regulation. A detailed description of this study is presented in the economic analysis for this proposed rule which is available in the public docket for this proposed regulation. The following discussion describes how the Agency conducted the feasibility study.

1. *Draft a preliminary list of registration review cases*. Using the criteria described in the proposed regulation, the Agency drafted a preliminary list of registration review cases and provisionally assigned baseline dates for each case.

2. *Selection of cases for the feasibility study*. The Agency randomly selected 30 cases from among the cases that, under the proposed scheduling procedures, would be scheduled for registration review in the first few years of the program. The proportions of conventional pesticides, biopesticides, and antimicrobial pesticides in the sample were roughly the same as the proportion of these categories of pesticides in the pesticide program.

3. *Assess the regulatory status of the pesticide*—a. Assemble information regarding: Current registrations and tolerances, including product labels; decision memos, reregistration eligibility decisions or tolerance reassessment decisions; pending registration actions; bibliography of submitted data; incident information or data submitted under FIFRA section 6(a)(2); and latest risk assessments for the pesticide.

b. Consult with others within the Office of Pesticide Programs (OPP) who review or regulate the pesticide. Because of time and resource constraints, OPP staff was unable to consult with other EPA program offices or other agencies. Under the proposed process, the Agency would consult with other EPA program offices and other agencies.

c. Develop a summary of the information on the regulatory status of the pesticide, including a brief discussion of the risks or other issues identified.

d. Under the proposed registration review process, the Agency would establish a docket for the information on the regulatory status of the pesticide and ask for comment on it. At this stage in the proposed registration review process, the Agency might ask stakeholders to comment on specific issues, such as the use of the pesticide, that the Agency might have identified. The Agency did not seek stakeholder input in the feasibility study. Accordingly, the feasibility study was limited to data available in the Agency's files.

4. *Determine whether the existing risk assessments meet current standards*. Ask: What do we know and what do we need to know, and what would be the value of the new information?

a. Clarify the uses of the pesticide, using information on product labels without attempts at detailed interpretation. Determine whether there is a risk assessment to support each use of the pesticide. Account for the data requirements for all the uses. Determine whether there are any on-going studies required under a DCI or conditional registration.

b. Identify the changes in requirements, risk assessment methods, science policy, and regulatory policy that have occurred since the last regulatory decision. For the feasibility study, the Agency identified changes since the publication of 40 CFR part 158 data requirements for pesticide registration in 1984, including: Introduction of a new paradigm for ecological risk assessment, 1993; introduction of short-term and intermediate-term human health risk assessments, 1995; worker protection standards in 40 CFR part 170, 1995; science policy changes arising from the passage of FQPA in 1996; EPA begins joint regulation of indirect food additives with FDA, 1996; introduction of probabilistic dietary risk assessments, 1998; and ''counterpart'' regulations regarding endangered species risk assessment, 2004.

c. In evaluating the risk assessment, consider the following factors, among other things: Are any existing data waivers still appropriate? Has the Agency established new data requirements for these uses? Has the Agency adopted new risk assessment methodology? Is there new information that suggests that the risk assessment should be revised?

d. In deciding whether to conduct a new risk assessment, consider the following factors, among other things: Is it likely that data from other sources--open literature, other government agencies--could address the uncertainties? Are new data or a new risk assessment likely to change a regulatory endpoint?

e. In the feasibility study, the Agency did not review new studies or conduct new risk assessments. Nor did it attempt to locate additional data or information by conducting searches of the open literature or consulting with other government agencies.

5. Prepare a document summarizing the findings of each review conducted under the feasibility study.

B. Lessons Learned in the Feasibility Study

The Agency evaluated the results of the feasibility study to improve its understanding of how the registration review process might work. Some of the findings are described in this unit. The Agency anticipates that the registration review decision process would continue to evolve as the Agency implements the program and gains experience in conducting registration reviews. Accordingly, the feasibility study illustrates the kinds of issues that might occur in registration review but by no means identifies all the issues that could arise.

1. *Case formation*. To develop a list of candidates for the feasibility study, the Agency applied the procedures it is proposing for forming registration review cases, thereby testing the assumptions that it made in developing these procedures. Before releasing a draft list of registration review cases, the Agency will continue to refine the information that it will use to generate such a list.

2. *Consultation with stakeholders*. The feasibility study demonstrated the usefulness of early consultation with stakeholders. Such consultation would help resolve issues such as questions regarding formulation of the pesticide, ambiguous label language, and use and usage of the pesticide. Examples include:

a. In one case, an ambiguous statement on a product label implied that a pesticide could be used either indoors or outdoors. There were insufficient data to support the outdoor use. In another case, an ambiguous statement on the label implied that the pesticide might have residential exposures. Consultation with the registrants and other stakeholders could help to clarify whether the registrants intended the pesticides to be used outdoors or in the home and whether users actually used or intended to use the pesticides in these ways.

b. A pesticide was registered for greenhouse and shadehouse uses. When the shadehouse use was registered (or reregistered), the Agency considered use of a pesticide in a shadehouse to be an indoor use. Since then, the Agency has reclassified shadehouse use as an outdoor use. Much additional data would be required to support this outdoor use. Consultation with the registrant could help to clarify whether the registrant intends to support the outdoor use of the pesticide.

3. *Determine whether the existing risk assessments meet current standards*—a. Determine whether there is a risk assessment to support each use of the pesticide. In some cases, the Agency found that there was no assessment of occupational or residential exposures or ecological risk posed by one or more uses of the pesticide. In order to conduct a registration review, the Agency would need additional data to assess the risk posed by such uses.

b. Evaluate the risk assessment to see whether the methods used to perform the risk assessment meet current standards. As expected, the Agency found that human health risk assessments were generally acceptable and complete for pesticides for which tolerance reassessments had been completed. In such cases, there generally was no need for further analysis. In other cases, the Agency found that a new risk assessment method had supplanted the method used in the existing risk assessment. In these cases, the Agency performed further analysis to determine whether it would need additional data to conduct a new assessment.

c. Check whether there are incident reports or data submitted under FIFRA section 6(a)(2). In one case, incident reports underscored the Agency's concern that a metabolite or degradate of the pesticide may be more toxic than the parent. The Agency would require additional data to characterize the effects of the metabolite or degradate.

In several cases, the Agency found that studies had been submitted under FIFRA section 6(a)(2) but were judged as not needing expedited review and had not yet been reviewed. Such studies would be reviewed in registration review to confirm the Agency's finding, made when the studies were submitted, that the results of the study do not warrant revision of the Agency's regulatory decision.

d. Account for the data requirements for all the uses. In some cases, the Agency had received studies that had been required in a RED or a conditional registration but had not yet reviewed them. In other cases, the Agency identified new data gaps. New data gaps might occur under a number of circumstances, such as:

- The Agency previously determined that a particular study was not needed in order to register or reregister a use, but now finds that the study is required. This might happen because the Agency has developed a new method for assessing the risk posed by a particular use. The data are needed to perform the new assessment and the Agency finds that it must conduct a risk assessment using the new method.
- The Agency finds that, because of changes in risk assessment methodology, a study that was adequate for use in an earlier risk assessment is inadequate for use in a new risk assessment.
- After registering or reregistering a particular use, the Agency reclassified the use into a different use category. The Agency requires more data to support uses in the new category than it does for uses in the former category.

e. Determine whether there are any on-going studies that the Agency required under a DCI or registration action. In some cases, the Agency found that studies needed to conduct a risk assessment were already required to support an application for registration of a new use or as a condition for registration under FIFRA section 3(c)(7). Where appropriate, the Agency would use such studies to support a review of existing uses as well as the new use or conditionally registered use.

f. Determine whether there are other potential sources of information that could address uncertainties identified in the review. Alternative sources of information might exist elsewhere in the Agency (i.e., outside of the Office of Pesticide Programs), other Federal agencies or the open literature. In the feasibility study, the Agency did not consult the open literature or anyone outside of the Office of Pesticide Programs.

g. Assess the value that would be provided by the new data or risk assessment. To conduct this phase of a registration review assessment, the Agency would consider the significance of a data gap or outdated risk assessment in the context of everything else it knows about the pesticide. In many cases, the Agency found that the missing information was essential and that without this information, it would not be able to determine whether the pesticide continued to meet the requirements of registration in FIFRA section 3(c)(5). In other cases, the

Agency found that it could accept the uncertainty that would occur if a particular risk assessment were not redone. For example, in one case, the Agency judged that the surface water exposure assessment did not meet current risk assessment guidance and that assessment as well as the drinking water exposure assessment should be redone. Exposure through drinking water accounted for less than 5% of human health risk, but aquatic species could still be exposed through pesticide residues in surface water. Accordingly, the Agency found that the human health risk assessment was complete, but additional work was needed to complete the ecological risk assessment.

4. *Case studies*. A summary of the results of the feasibility study was presented to the PPDC in 2004 and is available on the Agency's website at *http://www.epa.gov/oppfead1/cb/ppdc/regisreview/regreview-update.pdf*. Three case studies illustrate the effects of changes in requirements, risk assessment methods, and science or regulatory policy on risk assessments conducted before these changes occurred.

a. *Case 1*. This herbicide was registered for cereal crop uses in the late 1980's. Since then no new uses have been granted. The tolerances for this pesticide were reevaluated in accordance with FQPA. The environmental fate and effects of this pesticide were reviewed at the time of initial registration. The feasibility study showed that the dietary risk assessment performed for the FQPA tolerance reassessment is still acceptable. The occupational risk assessment would need to be updated, but no new data would be required for this assessment. Because of changes in ecological risk assessment methods since the late 1980's, a new ecological risk assessment would need to be performed.

b. *Case 2*. This biological insect control agent is a pheromone registered in the 1970's and reregistered in the 1990's. It is always used in a trap at low rates and is not applied directly to food or feed. Although there have been many changes in requirements, risk assessment methods, and policy since this pesticide was reregistered, none of these changes affect the validity of the existing risk assessments for this pesticide and no additional data are needed.

c. *Case 3*. This antimicrobial pesticide was registered in the mid-1980's and a RED was issued in the mid-1990's, before the passage of FQPA. It is used as an indirect food additive and has indoor residential uses such as use in cleaning products and as a disinfectant in ventilation systems, industrial uses, and outdoor uses. Because antimicrobial pesticides used as indirect food additives must now meet the safety standard of FQPA, a new dietary risk assessment would be required. FQPA dietary risk assessments assess aggregate risk from food, drinking water, and residential exposures. No new toxicity data would be required for this assessment, but residential exposure data would be needed. Worker exposure data would be needed for a new occupational risk assessment. Additional environmental fate data would be needed to support a drinking water exposure assessment and ecological risk assessment. Ecological effects data would be needed to support an ecological risk assessment.

IX. Proposed Procedures for Registration Review

A. Purpose of Registration Review

In proposed § 155.40 of the regulatory text, the Agency states that the purpose of a pesticide's periodic registration review is to ensure that each pesticide's registration continues to satisfy the statutory standard for registration in FIFRA.

B. Establish Registration Review Cases

In § 155.42 of the regulatory text, the Agency proposes to establish registration review cases that contain one or more active ingredients and the products that contain those active ingredients. The Agency proposes to continue the reregistration program practice of grouping related active ingredients into cases (e.g., 2,4-D and its salts & esters), where the active ingredients in each case are so closely related in chemical structure and toxicological profile as to allow common use of some or all of the same required data for hazard assessment.

As noted in proposed § 155.42 of the regulatory text, from time to time, the Agency may modify a case by adding or deleting an active ingredient and its associated products, split a case into two different cases, or merge a case with another case.

The Agency would close a registration review case when all the products in the case have been canceled.

C. Establish Baseline Date for Each Case

The Agency proposes in § 155.42 of the regulatory text to use the earliest post-1984 registration or reregistration decision as the point of departure for scheduling registration reviews. The Agency will use the signature date of a pesticide's RED or IRED as the baseline date for a registration review case for a pesticide that was subject to reregistration. If a pesticide's RED or IRED has not been completed by the time the registration review program begins, the Agency proposes to wait until it issues a reregistration decision before establishing a baseline date for such cases.

Once the Agency has assigned a baseline date to a case, it generally would not change this date when it modifies a case by adding or deleting ingredients or products to the case. When a registration review case is split into two or more cases, the new cases generally would keep the baseline date of the original registration review case. When two or more cases are merged, the Agency generally would use the baseline date of the case that had the earliest baseline date as the baseline date for the new case.

D. Maintaining Lists of Registration Review Cases

As provided in § 155.42 of the regulatory text, the Agency would maintain a list of registration review cases on its website.

E. Apply Scheduling Criteria to Create Schedules

Under § 155.44 of the regulatory text, the Agency proposes to base registration review schedules on baseline dates or, for subsequent registration reviews, the date of the latest registration review decision, and other factors. When developing schedules, the Agency would consider clustering cases belonging to the same chemical class to promote efficiency of review for the Agency and provide a ''level playing field'' for industry.

The Agency may take other factors into consideration when developing schedules for registration review. For example, the Agency's economic analysis of this proposed regulation suggested that a small business may be unduly burdened if it holds registrations in two or more registration review cases that are scheduled to undergo registration review in the same year. In such cases, the Agency may take into account when developing a schedule the potential burdens imposed on a small business (i.e., a business that meets criteria established by the Small Business Administration).

The Agency proposes to maintain registration review schedules on its website. The Agency expects to maintain schedules that list registration review cases scheduled for review in the current year and subsequent 2 years.

F. Early Determination That a Registration Review is Complete and Additional Review is Not Needed

When developing triennial schedules or at other times before or during a pesticide's registration review, the Agency may determine that there is no reason to reconsider a previous decision that a pesticide satisfies the standard for registration. Under proposed § 155.46, the Agency may propose that, based on its determination that a pesticide meets the FIFRA standard for registration, no further review will be necessary. The Agency would take comment on this proposal and issue a decision whether the pesticide's registration review is complete.

G. Early Determination of the Need for Additional Data or Information

The Agency and the PPDC agree that the Agency should have all the data and information it needs to conduct a registration review before it performs any new risk assessments or other analyses. The Agency will use a number of approaches to identify and receive data or information that it currently does not have but which it believes would be useful in conducting a pesticide's registration review. Stakeholders have advised the Agency that they could provide necessary data or information if they have advance notice and guidance as to how to prepare and submit such material.

The Agency expects that opportunities for engaging stakeholders in the identification of data needs and in the development of new data or information will become apparent as the program evolves. One such opportunity may occur when the Agency releases registration review schedules. When describing information that it does not have but believes may be useful, if available, in a pesticide's registration review, the Agency would provide guidance on how to prepare and submit such information. The Agency expects that stakeholders will participate in ways that promote a timely and productive exchange of views regarding the data or information needed for a pesticide's registration review.

H. Issue FIFRA Section 3(c)(2)(B) DCI Notices

There may be times when the Agency will be able to identify a data requirement well in advance of a pesticide's scheduled registration review. In such cases, the Agency might issue DCI notices to require the data to be submitted before the Agency begins the registration review. In some cases, the Agency may find in the course of a registration review that additional data or information are needed to complete the review. In other cases, the Agency may find that additional data are needed to confirm findings made in the registration review. Accordingly, in § 155.48 of the regulatory text, the proposed regulations stipulate that the Agency may use existing authority to issue a DCI notice to require data for use in the pesticide's registration review at any time before, during, or after the registration review for a particular case. This proposed rule does not, however, impose any requirements under FIFRA section 3(c)(2)(B).

I. Establish and Maintain a Registration Review Docket

The PPDC advised, and the Agency agrees, that the public should have the opportunity to review the types of information and issues that the Agency may consider in its forthcoming review of a registration review case. Under proposed § 155.50 of the regulatory text, the Agency would establish and maintain a public docket for each registration review case. In general, the docket would contain information to establish the current regulatory status of pesticides in the registration review case and information to indicate what has changed since the last registration decision on the pesticide. The Agency may create a case overview to identify the issues it may consider in the registration review.

The Agency would place in the docket information regarding currently registered uses of the pesticide. Among other things, the docket would list current registrations and tolerances, registrants of record, and documentation underlying current registrations and tolerances such as the most recent risk assessments and bibliography. For pesticides subject to reregistration under FIFRA section 4, the docket might include the RED or IRED and supporting science chapters, an assessment of cumulative risk for pesticides with a common mechanism of toxicity, and risk assessments supporting any new uses or other registration actions that have occurred since the signature date of the reregistration decision.

The Agency would assemble and place in the docket information to address the question: ''What has changed since the last assessment''? This might include generic changes such as new data requirements or risk assessment methods, new statutory mandates, new regulations, court orders, or changes in policy regarding the risks and benefits of pesticides.

There may be changes specific to the pesticide such as pending DCI actions, tolerance petitions, new use applications subject to the notification requirements in FIFRA section 3(c)(4), changes in use or usage, registration of reduced-risk alternatives under FIFRA section 3(c)(10), risk assessments conducted by other agencies or governments, incident data, data submitted under FIFRA section 6(a)(2), new hazard data on a structurally related chemical, or information regarding compliance or field experience.

The Agency would also place in the docket information relating to the registration review of individual product registrations. This information may include copies of product labels or links to a publically available database that contains images of product labels. Images of product labels are already available to the public on the Agency's website at: *http://www.epa.gov/pesticides/pestlabels/*.

To the extent that the Agency can identify questions or issues when the Agency first opens the docket for a particular registration review, the Agency intends to place in the docket questions or issues it identified while assembling information for a pesticide's registration review. For example, the Agency may want to know how users interpret an ambiguous label or it might need more precise information about how a pesticide is used in order to decide what data requirements would apply.

The Agency also intends to place in the docket any new information pertaining to the pesticide's registration review that it receives during the pesticide's registration review, subject to applicable protections like those imposed for CBI.

J. Other Things That Might Happen at this Stage of a Pesticide's Registration Review

When assembling information relating to a pesticide's regulatory status, or at any other time during a pesticide's registration review, the Agency may find information that suggests that the Agency might consider taking action under other existing authorities available outside of the pesticide's registration review. The Agency may find, for example, evidence that a registrant may have failed to complete one of the following actions that were taken under other authorities:

- Comply with a FIFRA section 3(c)(2)(B) notice.
- Submit data required as a condition of registration under FIFRA section 3(c)(7).

• Submit amended labels as required in reregistration or as specified in a notice of intent to cancel.

• Label a product for restricted use if this was a condition of registration or reregistration.

• Make label changes as required in a registration decision.

In such cases, the Agency would take appropriate action under other existing authorities in FIFRA to assure compliance with existing requirements.

K. Invite Review and Comment on the Registration Review Docket

After the Agency has assembled the information it intends to consider in a pesticide's registration review, it proposes in § 155.50 of the regulatory text to open the docket for each registration review case for public review and comment for a period of at least 60 days. Stakeholders may submit comments on the accuracy and completeness of information placed in the docket. At this point, registrants could, among other things, check to see whether the bibliography lists each of the studies they submitted and ascertain whether anything was omitted from the listing of regulated uses.

The comment period for the registration review case docket is the public's opportunity to submit information that responds to the Agency's information needs identified in a notice described above in Unit IX.G. or in the registration review case overview described above in Unit IX.I. Interested persons may also submit information that they believe may pertain to the pesticide's registration review.

L. Standards for Submitting Data or Information in Support of a Pesticide's Registration Review

Registrants may submit data or information in support of a pesticide's registration review. Since such submissions are already governed by existing requirements, the Agency is proposing minimum requirements in § 155.50 of the regulatory text for material submitted in support of a pesticide's registration review. Consistent with existing requirements, the proposed requirements for registration review are as follows:

• Submissions must be on time.

• Submissions must be in a useable and legible form. For example, a written English translation must accompany material not presented in English and a written English transcription must accompany material presented in videographic or audiographic form.

• Submitters must clearly identify the source of the data or information.

• A person may request the Agency to review material that it rejected in a previous review. However, the submitter must explain why he or she believes the Agency should reconsider the data or information in the pesticide's registration review.

In addition to the requirements proposed in this procedural regulation, the Agency has established other procedures or guidance for submitting data or information that may apply to the submissions described in this unit. For example, submitters to the docket should follow the available instructions applicable to the submission method used which are provided in the **Federal Register** notice, and made available at: *http://docket.epa.gov/edkpub/do/NoticeOfUse*. Additionally, the Agency requires that scientific data submitted in support of a pesticide's registration meet the format requirements of 40 CFR 158.32.

M. Quality of Submitted Data or Information

In order to promote efficient use of scarce resources, the Agency would screen all submissions in order to identify data or information it believes should be considered in the pesticide's registration review. In particular, the Agency would look for data or information that may materially affect the Agency's review. The Agency would consider, among other things, whether the submitted material is reliable, relevant, and current.

N. Examples of Information That Could Materially Affect a Pesticide's Registration Review

The Agency expects to use information on use or usage to refine exposure estimates. Other information might be used to assess the adequacy of risk mitigation measures or the benefits of the pesticide. If new and safer alternatives to a pesticide have become available, users might provide quantitative information about the benefits of a pesticide to justify continued registration of a pesticide with known high risks.

The Agency believes that stakeholders might be able to provide several different kinds of information. Registrants might have studies that they conducted for their own needs or to support a registration in another country. Users, especially those with interests in minor or specialty crops, could provide specific information about use and usage. Mosquito control districts or other public health agencies could provide information on the role of a pesticide in controlling pests that spread disease. Commodity groups could contribute information about the role of a pesticide in an integrated pest management program. Labor groups could describe the practicality and effectiveness of the worker protection measures required for the pesticide. USDA could provide survey information developed in the Pesticide Data Program (PDP) and use and usage information. The Interregional Research Project No. 4 (IR-4 Program), in partnership with State lead agencies or public health agencies, could provide residue or other exposure information.

O. Timely Submission of Data or Information

The Agency must receive pertinent data or information early in the registration review process to assure that any risk assessment conducted in registration review is based on the best data and information available. The Agency is particularly concerned that registrants and other stakeholders might not submit relevant data or information until the Agency releases a draft risk assessment. The Agency could then find that it needs to redo the risk assessments to take into account the new data or information. Such rework delays completion of the pesticide's review and ties up scarce resources.

In conducting a pesticide's registration review, the Agency will generally rely on the data or information that it has on hand at the close of the comment period. If data or information that could be used to refine a risk assessment were not submitted by the close of the comment period described in Unit IX.K. or by some other time that the Agency may designate, the Agency would use data and information available (or employ appropriate assumptions) in its risk assessments. The Agency may consider late submissions under exceptional circumstances.

P. Public Participation, Stakeholder Engagement, and Consultation with Other Government Agencies

1. *Public participation*. The PPDC advised the Agency to provide opportunities for the public to review and comment on draft documents that the Agency prepares during the registration review process. The PPDC recommended that the Agency model public participation procedures for registration review on the procedures adopted for reregistration and tolerance reassessment and that the degree of public involvement should be commensurate with the nature and complexity of the issues in a registration review case. In public participation procedures published in the **Federal**

Register of May 14, 2004 (69 FR 26819) the Agency would have discretion to decide when to seek public review and comment on draft documents prepared for reregistration or tolerance reassessment decisions. These documents would include draft risk assessments or draft regulatory decisions.

In proposed § 155.53, the Agency would generally ask for comments on draft risk assessments in cases where a new risk assessment was performed. In cases where the Agency's initial screening of a pesticide indicates that it has low use/usage, affects few if any stakeholders or members of the public, poses low risk and/or requires little or no risk mitigation, the Agency might not ask for comments on draft risk assessments at this stage. In such cases, the public would be able to review and comment on the draft risk assessment when the Agency releases a proposed decision for the registration review case.

2. *Stakeholder engagement.* The Agency intends to continue its practice, established in the reregistration and tolerance reassessment programs, of engaging stakeholders in making decisions regarding the continued use of existing pesticides.

Before beginning a registration review, the Agency may convene a meeting of registrants and representatives of pesticide user groups to discuss a pesticide's use and usage. These discussions might guide the registrant's decisions regarding which uses to support and inform the Agency's exposure estimates. The Agency may consult with other Federal, State or Tribal officials at this stage. For example, the Agency may consult with the Centers for Disease Control regarding a public health pesticide.

The Agency may engage stakeholders in the development of risk mitigation measures for a pesticide. The Agency might discuss risk management options with registrants and with pesticide users, public interest groups, or other Federal, State or Tribal officials. The Agency might convene a closure conference for all the interested parties where it reviews the issues and proposes a resolution that is based upon input from the interested parties.

The Agency expects to continue to be available, as it has been during the reregistration and tolerance reassessment programs, to meet with any interested party regarding a pesticide's registration review.

Under proposed § 155.52, the Agency would place in the docket minutes of meetings with persons outside of government where the primary purpose of the meeting is to discuss a forthcoming or ongoing registration review. Under this proposal, the Agency would place minutes of such meetings in the docket when it releases a decision. At its discretion, the Agency may place the minutes of such meetings in the docket sooner.

In the course of a meeting with a person outside of government, the Agency may provide that person with a copy of a document or other written material that the Agency has not yet released to the public. Similarly, a person outside of government may provide the Agency a copy of a document or other written material not previously released to the public. Under proposed § 155.52, the Agency would place a copy of the document or other written material in the registration review docket for the pesticide along with the minutes of the meeting where the documents were exchanged.

The Agency will not place CBI in the docket.

3. *Consultation with other governments.* The Agency may consult at any time with the Departments of Health and Human Services, Agriculture, Interior or other Federal, State or Tribal agency regarding a pesticide's registration review. At its discretion, the Agency may place minutes of meetings with government officials in the pesticide's registration review docket.

Q. Conduct a Pesticide's Registration Review

1. *Assess changes since the pesticide's last review.* The Agency proposes in § 155.53 of the regulatory text to review the data and information it possesses at the close of the comment period described in Unit IX.K. In general, it would assess any changes that have occurred since the Agency's last registration decision on the pesticide in order to determine the significance of such changes and whether additional review is needed to determine whether the pesticide meets the FIFRA standard for registration. In this review, the Agency would take into account, among other things, changes in statutes or regulations, policy, risk assessment procedures or methods, or data requirements. The Agency would consider whether new data or information on the pesticide, including data or information submitted to the docket, warrant conducting a new risk assessment or new risk/benefit assessment. Deciding whether existing risk assessments meet current standards is a key task in registration review.

Under proposed § 155.53, the Agency would assess any changes that may have occurred since an individual product's last registration decision to determine whether the significance of these changes warrant additional review of the product's registration. Changes affecting a pesticide's product registration might include changes in statutes or regulations, pesticide labeling requirements or policy, or product-specific data requirements. The Agency would also consider whether new data or information, such as data or information about an inert ingredient in the pesticide product or other data or information relating to the composition, labeling or use of the pesticide product warrant additional review of the pesticide product's registration. The Agency would also consider whether any new data or information submitted during the comment period described in Unit IX.K. warrant additional review of a product's registration.

The Agency might consider an additional review of some or all of the products in a registration review case under the following circumstances:

- *Age of the label.* It has been the Agency's practice, each time a registrant applies to amend his/her product's registration, to review the entire product label to assure that it complies with all requirements and conforms to applicable guidance. Accordingly, the labels of products with recent registration actions generally conform to current requirements and labeling policy, but the labels of products with no recent registration activity are likely to be outdated. The Agency might review labels that have not been updated since it established new requirements or adopted new policies that might affect products in a registration review case.
- *Concerns about other ingredients in the product.* The Agency may examine the composition of a product to see whether any of the inert ingredients in a product are known or suspected to have risks of concern and to assure that the inert ingredients have appropriate clearances for use in pesticides, including any tolerance or tolerance exemption that might be required. If the Agency has concerns about an inert ingredient, it may require the registrant to remove that ingredient from the product formulation or provide data to show that risks posed by the product are acceptable. If the Agency finds that an inert ingredient has not been cleared for a particular use, the Agency might require the registrant either to petition for clearance, remove the use from the product registration, or remove the ingredient from the product's formulation.
- *Concerns about product-specific data.* The Agency may assess whether

product-specific data submitted or cited to support a product's registration are appropriate. If the data are not appropriate, the Agency would require submission of new data.

2. *Conduct new assessments as needed*. If the Agency decides that a new assessment is needed, the Agency would ascertain whether it can base the new assessment on available data or information, including data or information submitted to the docket. If a new risk assessment can be conducted with available data or information, the Agency would do so. If the Agency believes that additional data or information are needed to conduct the new risk assessment, the Agency would issue DCI notices under FIFRA section 3(c)(2)(B).

R. What Happens When the Agency Finds That it Needs Additional Data to Complete a Registration Review?

As described in proposed § 155.48 of the regulatory text, the Agency would issue DCI notices under its existing FIFRA section 3(c)(2)(B) authority when it finds that additional data are needed to complete a registration review. Among other things, such notices would establish deadlines for submitting the data.

In addition to issuing a DCI notice, the Agency may issue an interim registration review decision when it is unable to complete a pesticide's registration review because it does not have necessary data or information to decide whether the pesticide meets the statutory standard for registration in FIFRA. As proposed in § 155.56 of the regulatory text, the Agency would consider issuing an interim registration review decision when it does not have the data necessary to complete a registration review but it does have sufficient information to determine that new risk mitigation measures are needed. Among other things, an interim registration review decision could utilize existing authorities to require new risk mitigation measures, including interim risk reduction measures that must be adopted until the Agency receives and reviews the data required to complete the registration review and makes a final registration review decision. The interim registration review decision might also include schedules for submitting data, conducting new risk assessments, and completing the registration review. It is important to note that any requirements discussed in the interim registration review decision document are not imposed by this proposed rule. Instead any such requirements would be imposed through other existing authorities.

When issuing an interim registration review decision, the Agency would follow the same procedures it proposes in § 155.58 of the regulatory text for issuing registration review decisions. These proposed procedures are described in Unit IX.U.

S. Deciding Whether to Conduct a New Benefits Assessment

Under proposed § 155.53, the Agency might conduct a new benefits assessment when a pesticide is known to pose high risk and there is new information about the benefits of using this pesticide. The new information might include the availability of reduced-risk alternatives. When a pesticide poses a risk of concern, the Agency would consider the economic benefits of the pesticide under FIFRA section 2(bb). It is important to note that the safety standard in FFDCA section 408(b) precludes consideration of benefits for pesticides used on, in, or around food. Nonetheless, the Agency may estimate the economic benefits of a pesticide that does not meet the FFDCA standard in order to manage transition from the pesticide to safer alternatives.

T. Possible Outcomes of a Pesticide's Registration Review

Under proposed § 155.57, the Agency would complete a pesticide's registration review after it performs all risk assessments or benefit assessments that it deems to be necessary to determine whether the pesticide meets the FIFRA standard for registration. As discussed in this unit, the Agency has identified three possible outcomes of a pesticide's registration review: (1) The pesticide meets the requirements for registration in FIFRA and the registration review is complete; (2) the pesticide does not meet the requirements for registration in FIFRA and the registration review is complete; or (3) the pesticide meets the requirements for registration in FIFRA section (3)(c)(7), the registration review is complete, but may be revisited when certain new data are submitted.

1. *Registration review is complete and the pesticide meets the requirements for registration in FIFRA*. Using other available authorities, the Agency may:

- Specify label changes or other measures or remedies to mitigate a risk of concern and establish deadlines for taking the specified actions;
- Specify label changes to bring the product label into conformance with regulations or applicable policy; and/or
- Require new data to confirm the findings of a risk assessment.

2. *Registration review is complete and the pesticide does not meet the requirements for registration in FIFRA*. Publication of notices specified by other existing authorities in FIFRA section 6 might precede, accompany, or follow the issuance of the registration review decision, as appropriate. This outcome might occur under the following circumstances:

- If previous risk assessments showed a risk of concern associated with uses of the pesticide, but the use remained registered because of the high benefits associated with the use, the Agency might conduct a new benefits assessment under FIFRA section 2(bb). The new benefits assessment may show that decreased benefits of the pesticide or availability of alternatives no longer justify the risks associated with continued use of the pesticide.
- In the course of a pesticide's registration review, the Agency may find that use of a pesticide on food does not meet the safety standard in FFDCA section 408 and that mitigation is neither feasible nor sufficient to ameliorate the risk.
- In the course of a pesticide's registration review, the Agency may find that use of a pesticide poses risks of concern to workers or non-target species. If mitigation is neither feasible nor sufficient to ameliorate the risk, the Agency would conduct a benefits assessment under FIFRA section 2(bb) to determine if risks of continued use of the pesticide outweigh the benefits.

3. *Registration review is complete but may be revisited when new data are submitted; the pesticide meets the requirements of FIFRA section (3)(c)(7)*.

- The Agency may conclude a registration review in some circumstances where a general DCI that was previously issued is still in progress. The Agency might revisit the registration review decision if warranted.
- The Agency might use other existing authority to ask for data to confirm a particular aspect of a risk assessment or take any of the other actions described above in Unit IX.T.1.

U. Issuing Registration Review Decisions

Under proposed § 155.58, the Agency would issue a proposed interim registration review decision or a proposed registration review decision. The proposed decision would, among other things, state the Agency's proposed findings with respect to the FIFRA standard for registration, identify proposed risk mitigation, describe any additional data that the Agency believes are needed, specify proposed labeling changes, and identify deadlines the

Agency intends to set for taking the required actions. It is important to note that any requirements discussed in the registration review decision document are not imposed by this proposed procedural rule. Instead such requirements would be imposed through other existing authorities.

The Agency would take comment on the proposed decision and on the data or information it considered in its proposed decision.

The Agency would issue a final decision and also make available the Agency's response to comments on the proposed decision and an explanation of any changes to the proposed decision.

V. Implementation of Registration Review Decisions and Interim Registration Review Decisions

Under proposed § 155.58, the registration review decision or interim registration review decision would specify actions that a registrant must take as prescribed under other existing authorities, and establish deadlines for completing those actions. The docket for the pesticide's registration review would remain open until the registrant has completed the required actions. The Agency may initiate appropriate action under other existing authorities and procedures prescribed under FIFRA if a registrant fails to comply as required.

The Agency will continue to work with its partners in the States and Tribes to assure that pesticides bear new labels as required and that users comply with the directions on the pesticide label.

W. Program Evaluation

The Agency plans to periodically evaluate the registration review process. The Agency will develop methods to analyze various aspects of the registration review program. For example, the Agency intends to assess the extent to which data that it required for a pesticide's registration review affected the risk assessment.

The Agency may also assess guidance it provides to registrants and the public regarding their participation in a pesticide's registration review in order to improve the utility of the information that stakeholders prepare for submission to the Agency.

The Agency might evaluate the information management systems used to receive and store information relating to a pesticide's registration review in order to achieve process efficiencies and improve public access, where appropriate, to information in these systems.

As required under the Government Performance and Results Act, the Agency will develop methods to measure the public benefits of the program. Benefits might include public health and environmental improvements resulting from identification, assessment, and mitigation of previously unrecognized or poorly understood risks; increased public confidence in the safety of pesticides; improvements in pesticide labeling and risk communication; improved information about pesticides for informing market choice; and improved corporate stewardship of pesticides, as follows:

- Public health and environment--periodic review might uncover previously unrecognized or poorly understood risks, determine whether the appearance of new alternatives since the last review would change the risk/benefit balance, and function as a safety net to help assure that nothing important was overlooked.
- Economic benefits--periodic review could maintain a stable market for pesticide users. Continued availability of a variety of products could promote competition and reduce the price of pesticides.
- Improved stewardship--because registration review decisions would be made through transparent procedures with public involvement, the Agency's and stakeholders' practices and positions would also be visible and subject to public scrutiny. The Agency anticipates that this visibility could enhance corporate responsibility and accountability regarding keeping a pesticide's database and product labeling up-to-date. The Agency also anticipates that continual public discourse regarding pesticide use might facilitate an exchange of ideas within the pesticide user community regarding best practices. If this were to happen, the environmental burden might decline.
- Continuous improvement of the reliability of Agency decisions about pesticides--when a registration review decision shows that no changes are necessary, the public is assured that the decision to continue the registration of the pesticide is based on a finding that the pesticide meets current standards and remains current with evolving science.
- Conserve public resources--periodic review would limit or nearly eliminate the need to conduct a resource-intensive comprehensive review of all pesticides such as reregistration or tolerance reassessment.

X. Request for Comment

In the proposed process, the Agency is seeking to balance a registrant's or pesticide user's need for specific standards against the Agency's need for flexibility to revise these standards in light of knowledge gained through evolving science.

The Agency proposes to inform the public of changes in statute, regulations, data requirements, risk assessment methods, and science policy, among other things, that the Agency will consider in its determination whether the pesticide continues to meet the FIFRA standard for registration. Under this proposal, the Agency would judge whether these changes are significant enough to warrant conducting a new risk assessment to use as a basis for determining whether the pesticide continues to meet the FIFRA standard for registration. Under the proposal, such determinations would be made on a case-by-case basis, where the Agency considers what is already known about the pesticide and evaluates whether new information, including a new risk assessment which might be conducted using a new method or data, would change the Agency's regulatory position on the pesticide.

The Agency recognizes it is essential that decisions about the significance of the changes in statute, regulations, data requirements, risk assessment methods, science policy, and other things considered in a registration review be consistent. For example, the public should be able to understand why a change in risk assessment procedures warrants a new risk assessment in one case and not in another. The Agency believes that it would not be practical to anticipate all possible contingencies in order to establish criteria for deciding the significance of the changes described in this unit. The Agency will continue to rely on its internal procedures for peer and managerial review to assure that its decisions are consistent. Additionally, the Agency is proposing a transparent process in which the Agency would show the information that it considered and would produce decision documents that would explain its reasoning. The Agency is proposing an open process in which the public has the opportunity to review and comment on draft risk assessments and draft registration review decisions. The public would have the opportunity to comment on the consistency of a proposed decision. Finally, the Agency intends to monitor and evaluate the registration review program. Such evaluations may include assessments of the procedures used to promote and assure consistency in its decision-making.

The Agency encourages you to comment on its approach for balancing the registrant's or pesticide user's need

for specific standards with the Agency's need for flexibility to revise these standards in light of knowledge gained through evolving science.

XI. Relationship of Registration Review to Other Pesticide Program Activities

Registration review is intended to be a periodic review to assure that a registered pesticide continues to meet the FIFRA standard for registration. However, to the extent practicable, the Agency also intends to use registration review as a context for performing other risk assessment, benefit assessment, and risk management work. For example, the Agency has evolving or new programs concerning existing pesticides such as conducting assessments of pesticide risks to threatened or endangered species, conducting endocrine disruptor screening and testing, or assuring that certain tolerances are reviewed every 5 years as required by FFDCA section 408(b). The Agency will continue to use a variety of approaches to manage these requirements, including incorporating these activities into the registration review program.

In proposing the procedures for implementing the registration review program, this proposed rule does not impose new requirements on the regulated community. Instead, should the Agency determine the need to impose requirements during a registration review, e.g., to generate data or amend the label or registration, the Agency will utilize other existing authorities, e.g., using FIFRA section 3(c)(2)(B) authority to obtain needed data.

A. Relationship to Tolerance Reassessment and Reregistration

The registration review program is a brand new program that will begin after the Agency completes tolerance reassessment in 2006. The Agency will begin implementing the registration review program while it completes the reregistration program. The Agency expects to complete the last reregistration eligibility decision by September 2008.

B. Relationship of Registration Review to Existing Procedures for Managing Emerging Risk Concerns

The Agency has a continuing obligation to respond to emerging risk concerns. At any time, the Agency may receive new information that suggests that the Agency should reevaluate a previous decision to register a pesticide. After the registration review program begins, the Agency will continue to give priority to emerging risk concerns. In establishing the requirement to conduct registration review, FIFRA section 3(g) states that nothing shall prohibit the Agency from undertaking any other review under FIFRA. Among other things, this provision means that the Agency must continue to respond to emerging risk concerns and not defer action until a pesticide's regularly scheduled registration review.

FIFRA section 6(a)(2) requires registrants to submit factual information regarding a pesticide's unreasonable risk of adverse effects on the environment. The Agency has codified in 40 CFR part 159 its criteria for identifying information that must be reported under FIFRA section 6(a)(2) and the procedures for submitting such information. The Agency also responds to reports from other sources, such as other governmental agencies or academic researchers. The Agency is continuously seeking to improve systems that capture and report adverse events relating to pesticide risks.

When the Agency learns of new information that could significantly change its understanding of a pesticide's risk, it uses triage systems to evaluate the information to gauge the importance of the issue and the need for urgent response. The process the Agency uses to assess the significance of adverse effects information reported under FIFRA section 6(a)(2) is one example of a triage system. When the Agency receives a (6)(a)(2) report, it reviews the reported results of the study and asks: ''If this study is a scientifically valid study, would the Agency revise its regulatory position on the basis of this report'' If so, the Agency expedites a full review of the study and takes other action as appropriate.

Although the Agency will not postpone responding to an urgent risk concern until the pesticide's regularly scheduled registration review, the Agency may reschedule a pesticide's registration review because of a new risk concern. For example, if the Agency is reviewing a pesticide because of a new risk concern, it may decide to conduct the pesticide's registration review at the same time, even though the registration review would occur several years ahead of schedule. Since the Agency must expend resources to address a pesticide's urgent risk concern, it may opt to review all other aspects of the pesticide's registration at that time.

C. Managing New Data Needs

New data needs may arise from new statutory requirements, such as the screening and testing program for endocrine disruptor effects mandated in FFDCA section 408(p); new regulations, such as amendments to 40 CFR part 158; or changes in science policy. This proposed rule does not change the authority or existing process for identifying new data needs. The Agency will continue to use a variety of approaches, including registration review, to address an identified need for new data requirements for existing pesticides. The following are some of the approaches the Agency might use to manage DCIs issued under existing FIFRA section 3(c)(2)(B) authority.

- Special DCI projects. The Agency may respond to a new data requirement by issuing DCI notices to registrants of all affected pesticides simultaneously, without regard to the registration review schedule. The Agency might use this approach when a data requirement applies to a class of pesticides, i.e., pesticides with particular chemical characteristics or use pattern, and the Agency urgently needs the data to address a risk concern.
- Pipeline DCIs. The Agency might issue DCI notices for new data requirements 2 or 3 years before a pesticide's scheduled registration review so that the data would be required to be submitted in time for the registration review. This approach is particularly useful when a new data requirement applies to virtually all pesticides and is so new and different that it generally cannot be satisfied by previously submitted data. For instance, this approach might be used to obtain endocrine disruptor screening and testing data required under FFDCA section 408(p).
- Conditional registration of new uses. When the Agency identifies a data gap in the course of reviewing an application for a new use, it may make approval of the new use conditional on the receipt of data to satisfy the data requirement. These data would then be available when the Agency conducts a registration review of the pesticide.
- Call-in the data as part of a regularly scheduled registration review. Identifying a data gap generally requires a lot of resources. In most situations, the Agency must conduct a review to determine whether a data requirement applies, and if so, whether it can be satisfied with existing data and who should be required to provide the data. It may be more efficient to conduct such an analysis in the context of a regularly scheduled registration review.

D. Relationship to Reviews of Applications for Registration of New Uses

The Agency will not delay registration of a new use of a pesticide while conducting the registration review of the

pesticide. It will consider, however, whether reviewing the new use and the existing uses together would be an efficient use of resources and produce a better decision. When beginning a pesticide's registration review, the Agency would note any pending applications for registering a significant new use. If an application for registering a new use arrives during the pesticide's registration review, the Agency would post this information in the pesticide's registration review docket. The Agency would, to the extent practicable, include the application for the new use in its registration review considerations.

E. Relationship to Special Review

The Agency expects any current special reviews to be resolved through the reregistration program. As a matter of policy, the Agency does not use special review procedures in 40 CFR part 154 when it receives new information regarding an urgent and serious risk. In such cases, the Agency uses procedures under FIFRA section 6 to resolve the risk concern as expeditiously as possible.

The PPDC suggested that a decision to initiate a special review might be an outcome of a pesticide's registration review. The PPDC believed that special review may be appropriate in cases where further study, possibly including developing new scientific approaches, is needed to resolve questions raised about the pesticide.

If a pesticide presents an issue that is too complex to be resolved in the time frame allocated for a pesticide's registration review, the Agency might issue an interim registration review decision, with a plan for addressing the unresolved issues. The plan could include a schedule for developing a scientifically sound approach for resolving the issue and require periodic reports on progress toward resolution. Because the proposed registration review procedures would provide an open and transparent process for resolving the issue, the Agency believes that may not be necessary to use special review procedures to complete the review.

F. Managing Potential Risks of Substitute Pesticides

In managing the potential risks identified in a pesticide's registration review, one or more of a pesticide's uses might be voluntarily canceled or amended. In addition, the Agency might take action under FIFRA section 6 procedures to cancel a use that poses risks of concern. In either case, there is a possibility that a pesticide posing greater risks could replace the canceled use. Shifting the market to a potentially more harmful pesticide could be an unintended consequence of registration review.

The Agency believes that shifting the market to a potentially more harmful pesticide is less likely to occur under the proposed approach for scheduling registration review than under other scheduling approaches. The Agency proposes to review the oldest pesticides first, i.e., pesticides with the earliest dates of reregistration or post-1984 registration. The pesticides that could be substitutes for these older pesticides are pesticides that the Agency has reviewed more recently through registration or reregistration, based on more recent data requirements and using more recent risk assessment methodology. Additionally, many of the pesticides registered since 1996 are reduced-risk pesticides. The risks of the potential substitutes are, therefore, well characterized and appropriately managed.

As science advances, the Agency may modify its data requirements to add new tests that measure hazard endpoints that may not be captured by current test methods. As discussed in Unit IX.H., the Agency proposes to require submission of such studies during registration review, when necessary to conduct a pesticide's review. A pesticide registrant may choose to cancel a pesticide use rather than conduct the required testing. Or the new test may show that a use must be canceled or amended to mitigate a new risk concern. In either event, it is possible that the market might shift to a pesticide that has not been tested for the new hazard endpoint. However, as the Agency gains experience with the new test method, it may acquire information that it could use to set priorities for testing and conduct a special DCI project to require testing of high priority pesticides. This activity could reduce the tendency of the market to shift to an untested pesticide.

The Agency has several approaches for minimizing the likelihood of a market shift to a more risky or untested pesticide, as follows.

1. *Assessing risks of substitutes*. When the Agency is considering canceling a use under FIFRA section 6, it must assess the benefits of the use to determine whether the risks and benefits of the pesticide warrant cancellation. This assessment generally entails identifying pesticides that could substitute for the canceled use. When analyzing benefits under FIFRA section 6, the Agency checks to see whether any of the substitutes pose higher risks than the pesticide being considered for cancellation.

Although the Agency does not analyze benefits when a registrant requests voluntary cancellation of a pesticide, the Agency provides the public an opportunity to comment on the proposed cancellation under FIFRA section 6(f). Under the proposed procedures for registration review, the Agency would also provide an opportunity for the public to comment on any Agency proposal to place restrictions on the use of a pesticide. Users or other stakeholders may describe any concerns they might have regarding the availability of substitutes if the Agency cancels or places restrictions on a use.

Depending on the seriousness of the potential risk posed by a substitute pesticide, the Agency could take action as follows:

- Issue a FIFRA section 3(c)(2)(B) DCI notice requiring data to characterize the potential risk of the substitute pesticide;
- Advance the registration review schedule for the substitute pesticide; or
- Manage the risk posed by the substitute pesticide generally in a process outside of registration review.

2. *Group pesticides by chemical class or use cluster*. When feasible, the Agency may group pesticides for registration review by chemical class allowing all the chemicals in that class to be reviewed together and making it possible to address any risks posed by pesticides in that class at the same time. This would be most useful when pesticides in a chemical class are used interchangeably. This procedure would reduce concerns regarding unreviewed substitutes.

When feasible, the Agency may group pesticides by use cluster. For example, in the reregistration program, the Agency grouped soil fumigants, wood preservatives, and rodenticides. Since pesticides in a use cluster may be used interchangeably, such a procedure would reduce concerns regarding unreviewed substitutes.

The Agency believes the chronological approach to scheduling registration review cases is even-handed and practicable for managing the program's expected workload. However, EPA also realizes that relying exclusively on such an approach may not work in all cases. When necessary, the Agency may elect to take cases out of the original, chronological sequence for risk concerns or other factors. While doing so would be the exception, rather than the rule, there may arise circumstances that in the judgement of the Agency warrant changes to the schedule and require additional

analysis, including an evaluation of risks to substitute pesticides. Nonetheless, the Agency does not anticipate doing an extensive alternatives assessment as a regular feature of registration review because doing so would disrupt the regular scheduling of registration review that the Agency, industry, and other stakeholders rely upon to plan for a pesticide's registration review.

XII. Phase-in of Registration Review Program

The Agency plans to begin the registration review program in September 2006. To the extent possible, the Agency expects to prepare for transition to this program while completing the procedural rule.

A. Developing Procedures for Establishing Registration Review Cases

This proposal describes procedures for establishing registration review cases and assigning baseline dates for each registration review case. The Agency may use the proposed procedures to create a preliminary list of registration review cases. The purpose of this project would be to develop internal processes for creating a list of registration review cases. The Agency may release this list for public review and comment.

B. Feasibility Studies to Test the Proposed Registration Review Process

As described elsewhere in this preamble, the Agency conducted a feasibility study to test the registration review decision process. This project also produced data to support development of the economic assessment that accompanies this proposed rule.

The Agency may conduct other projects to examine other aspects of the registration review process. For example, the Agency might conduct a feasibility study to see how early consultation might affect the outcome of the registration review decision process.

C. Data Call-In Projects

The Agency may issue DCI notices under existing FIFRA section 3(c)(2)(B) authority to obtain data it believes to be necessary to support the registration of certain pesticides. After the registration review procedural regulations go into effect, such pesticides might become candidates for registration review in the early years of the program.

XIII. FIFRA Review Requirements

In accordance with FIFRA section 25(a), this proposal was submitted to the FIFRA Science Advisory Panel (SAP), the Secretary of Agriculture (USDA), and appropriate Congressional Committees. The SAP has waived its review of this proposal, and no comments were received from any of the Congressional Committees or USDA.

XIV. Statutory and Executive Order Reviews

A. Executive Order 12866

Pursuant to Executive Order 12866, entitled *Regulatory Planning and Review* (58 FR 51735, October 4, 1993), the Office of Management and Budget (OMB) has designated this proposed rule as a ''significant regulatory action'' under section 3(f) of the Executive Order because it may raise novel legal or policy issues arising out of legal mandates, the President's priorities, or the principles set forth in the Executive Order. This action was therefore submitted to OMB for review under this Executive Order, and any changes to this document made at the suggestion of OMB have been documented in the public docket for this rulemaking.

EPA has prepared an economic analysis of the potential impacts of the registration review procedures, if implemented as proposed. In addition to the requirements contained in this proposed rule, the Agency analyzed other potential actions that could occur during a registration review using other existing authorities that are not proposed or otherwise changed in this proposed rule. The Agency's analysis, therefore, considers the potential impact of the registration review process, which includes the costs of a registrant's participation in the public review components of the process described in this proposed rule and other potential requirements imposed by existing authorities such as data generation under FIFRA section 3(c)(2)(B). This analysis is contained in a document entitled *Economic Analysis of the Proposed Procedural Regulations for the Registration Review of Pesticides*. A copy of this Economic Analysis is available in the public docket for this action and is briefly summarized here.

The proposed rule does not require registrants to take specific action as part of the review of a pesticide registration; however, the Agency's analysis assumes that registrants will engage in their own evaluation of information provided by the Agency and other stakeholders, and participate in the public process described in this proposed rule. The Agency estimates such industry costs to be around $1.2 million annually.

The Agency recognizes that under other existing authorities a registrant may also need to submit data that they have or generate data as necessary to support the registration. As such, the analysis also considers the potential cost to industry from other anticipated activities under existing authorities that may occur during the registration review process, although such activities are not proposed requirements in this rulemaking. These activities include potential data submission or generation activities related to DCIs, including the paperwork burden, and other activities that might occur under other existing authorities.

Considering these other potential activities, the analysis shows an estimated total annual cost to industry of about $50 million, with the estimates for potential data generation activities accounting for approximately 70% of these costs. The Agency estimates about 68 companies will be impacted each year; thus, per-company costs for the entire registration review process are likely to average less than $750,000 each year, even though some companies may have multiple chemicals under review during the year. Out of the universe of 2,000 small businesses estimated to hold pesticide registrations, the Agency estimates that only about 30 small businesses might be involved in a registration review each year. Assuming the same level of participation and potential need to generate data, the estimated average cost of the registration review process is estimated to be less than 2% of the gross sales for small businesses.

B. Paperwork Reduction Act

The information collection activities associated with the registration review program are already approved by the Office of Management and Budget (OMB) under the Paperwork Reduction Act, 44 U.S.C. 3501 *et seq.* That Information Collection Request (ICR) document has been assigned EPA ICR number 0922.07, and OMB control number 2070–0057. Although this action does not impose any new information collection requirements that would require additional approval by OMB, the Agency expects the approved burden estimate to increase with the full implementation of the registration review process. A copy of the OMB approved ICR has been placed in the public docket for this proposed rule, and the Agency's estimated burden increase is presented in the economic analysis that has been prepared for this proposed rule.

Under the currently approved ICR, the Agency estimated the annual respondent burden for information collection activities associated with the registration review program to average

63,780 hours, with an estimated total annual respondent cost of $5,769,960. As detailed in the Economic Analysis prepared for this proposed rule, the annual respondent burden for information collection activities associated with the registration review program is estimated to increase to an average 120,000 hours, with an estimated total annual respondent cost of $10,800,000. The increase in the annual burden and costs for the information collection activities associated with the registration review program (revised as appropriate) will be incorporated into the existing ICR when the final rule is promulgated.

Under the PRA, ''burden'' means the total time, effort, or financial resources expended by persons to generate, maintain, retain, or disclose or provide information to or for a Federal agency. This includes the time needed to review instructions; develop, acquire, install, and utilize technology and systems for the purposes of collecting, validating, and verifying information, processing and maintaining information, and disclosing and providing information; adjust the existing ways to comply with any previously applicable instructions and requirements; train personnel to be able to respond to a collection of information; search data sources; complete and review the collection of information; and transmit or otherwise disclose the information.

An agency may not conduct or sponsor, and a person is not required to respond to an ICR unless it displays a currently valid OMB control number. The OMB control numbers for EPA's regulations in 40 CFR, after appearing in the preamble of the final rule, are listed in 40 CFR part 9 and included on any related collection instrument (e.g., on the form or survey).

Submit any comments on the Agency's need for this information, the accuracy of the provided burden estimates, and any suggested methods for minimizing respondent burden, including the use of automated collection techniques, along with your comments on the proposed rule as instructed under **ADDRESSES**. The Agency will consider any comments related to the information collection requirements contained in this proposal as it develops the final rule. Any changes to the burden estimate for the ICR will be effectuated with the final rule.

C. Regulatory Flexibility Act

Pursuant to section 605(b) of the Regulatory Flexibility Act (RFA), 5 U.S.C. 601 *et seq.*, the Agency hereby certifies that this proposal will not have a significant adverse economic impact on a substantial number of small entities. This proposed rule defines the procedures that EPA will follow to implement the statutory registration review provision. It does not impose any new requirements on the regulated community.

This proposal does not have direct adverse impacts on small businesses, small non-profit organizations, or small local governments. For purposes of assessing the impacts of today's proposed rule on small entities, small entity is defined as: (1) A small business as defined by the Small Business Administration's (SBA) regulations at 13 CFR 121.201, which for the pesticide industry consists of businesses with fewer than 500 to 1,000 employees (range is based on NAICS sector variations); (2) a small governmental jurisdiction that is a government of a city, county, town, school district or special district with a population of less than 50,000; and (3) a small organization that is any not-for-profit enterprise which is independently owned and operated and is not dominant in its field. The regulated community does not include any small governmental jurisdictions or small not-for-profit organizations.

D. Unfunded Mandates Reform Act

Under Title II of the Unfunded Mandates Reform Act of 1995 (UMRA) (Public Law 104–4), EPA has determined that this action does not contain a Federal mandate that may result in expenditures of $100 million or more for State, local, and Tribal governments, in the aggregate, or the private sector in any 1 year. As described in Unit XIV.A., this proposed rule is not expected to result in such expenditures. In addition, this action will not impact small governments, or local or Tribal governments. Accordingly, this proposed rule is not subject to the requirements of sections 202, 203, 204, and 205 of UMRA.

E. Executive Order 13132

Pursuant to Executive Order 13132, entitled *Federalism* (64 FR 43255, August 10, 1999), EPA has determined that this proposed rule does not have ''federalism implications,'' because it will not have substantial direct effects on the States, on the relationship between the national government and the States, or on the distribution of power and responsibilities among the various levels of government, as specified in the Order. Thus, Executive Order 13132 does not apply to this proposed rule.

F. Executive Order 13175

As required by Executive Order 13175, entitled *Consultation and Coordination with Indian Tribal Governments* (65 FR 67249, November 6, 2000), EPA has determined that this proposed rule does not have Tribal implications because it will not have any affect on Tribal governments, on the relationship between the Federal government and the Indian tribes, or on the distribution of power and responsibilities between the Federal government and Indian tribes, as specified in the Order. Thus, Executive Order 13175 does not apply to this proposed rule.

G. Executive Order 13211

This proposed rule is not subject to Executive Order 13211, entitled*Actions Concerning Regulations that Significantly Affect Energy Supply, Distribution, or Use* (66 FR 28355, May 22, 2001) because it is not designated as an ''economically significant'' regulatory action as defined by Executive Order 12866 (see Unit XIV.A.), nor is it likely to have any significant adverse effect on the supply, distribution, or use of energy.

H. Executive Order 13045

Executive Order 13045, entitled*Protection of Children from Environmental Health Risks and Safety Risks* (62 FR 19885, April 23, 1997) does not apply to this proposed rule because this action is not designated as an ''economically significant'' regulatory action as defined by Executive Order 12866 (see Unit XIV.A.), nor does it establish an environmental standard, or otherwise have a disproportionate effect on children.

I. National Technology Transfer and Advancement Act

Section 12(d) of the National Technology Transfer and Advancement Act of 1995 (NTTAA), 15 U.S.C. 272 note) directs EPA to use voluntary consensus standards in its regulatory activities unless to do so would be inconsistent with applicable law or impractical. Voluntary consensus standards are technical standards (e.g., materials specifications, test methods, sampling procedures) that are developed or adopted by voluntary consensus standards bodies. This proposed rule does not impose any technical standards that would require EPA to consider any voluntary consensus standards.

J. Executive Order 12898

This proposed rule does not have an adverse impact on the environmental

and health conditions in low-income and minority communities. Therefore, under Executive Order 12898, entitled *Federal Actions to Address Environmental Justice in Minority Populations and Low-Income Populations* (59 FR 7629, February 16, 1994), the Agency does not need to consider environmental justice-related issues.

List of Subjects in 40 CFR Part 155

Environmental protection, Administrative practice and procedure, Pesticides and pests.

Dated: July 6, 2005.

Stephen L. Johnson,

Administrator.

Therefore, it is proposed that 40 CFR chapter I be amended as follows:

PART 155—[AMENDED]

1. The authority citation for part 155 will continue to read as follows:

Authority: FIFRA 136a.

2. By adding a new subpart C to read as follows:

Subpart C—Registration Review Procedures

Sec.

155.40 General.
155.42 Registration review cases.
155.44 Establish schedules for registration review.
155.46 Deciding that a registration review is complete and additional review is not needed.
155.48 Data Call-In before, during, or after a registration review.
155.50 Initiate a pesticide's registration review.
155.52 Stakeholder engagement.
155.53 Conduct a pesticide's registration review.
155.56 Interim registration review decision.
155.57 Registration review decision.
155.58 Procedures for issuing a decision on a registration review case.

Subpart C—Registration Review Procedures

§ 155.40 General.

(a) *Purpose*. These regulations establish procedures for the registration review program required in FIFRA section 3(g). Registration review is the periodic review of a pesticide's registration to ensure that each pesticide registration continues to satisfy the FIFRA standard for registration. The goal of the registration review procedures is review of each pesticide's registration every 15 years.

(1) Among other things, FIFRA requires that a pesticide generally will not cause unreasonable adverse effects on the environment. Registration review is intended to ensure that each pesticide's registration is based on current scientific and other knowledge regarding the pesticide, including its effects on human health and the environment.

(2) If a product fails to satisfy the FIFRA standard for registration, the product's registration may be subject to cancellation or other remedies under FIFRA.

(b) *Applicability*. This subpart applies to every pesticide product registered under FIFRA section 3 as well as all pesticide products registered under FIFRA section 24(c). It does not apply to products whose sale or distribution is authorized under FIFRA section 5 or section 18.

(c) *Limitations*. (1) At any time, the Agency may undertake any other review of a pesticide under FIFRA, irrespective of the pesticide's past, ongoing, scheduled, or not yet scheduled registration review.

(2) When the Agency determines that new data or information are necessary for a pesticide's registration review, it will require such data under FIFRA section 3(c)(2)(B).

§ 155.42 Registration review cases.

(a) *Establishing registration review cases*. A registration review case will be composed of one or more active ingredients and all the products containing such ingredient(s). The Agency may group related active ingredients into a registration review case when the active ingredients are so closely related in chemical structure and toxicological profile as to allow common use of some or all required data for hazard assessment.

(1) Existing pesticides. The Agency will assign each pesticide registered on or before the effective date of this regulation to a registration review case.

(2) New pesticides. The Agency will assign each pesticide registered after the effective date of this regulation to an existing registration review case or to a new registration review case.

(3) A pesticide product that contains multiple active ingredients will belong to the registration review cases for each of its active ingredients.

(b) *Modifying registration review cases*. New data or information may suggest that a registration review case should be modified. The Agency may modify a registration review case in the following ways:

(1) Add a new active ingredient to a registration review case. The Agency may determine that a new active ingredient is chemically and toxicologically similar to active ingredients in an existing registration review case and should be grouped with the ingredients in the existing registration review case.

(2) Split a registration review case into two or more registration review cases. For example, new data or information may suggest that active ingredients in a registration review case are not as similar as previously believed and that they belong in two or more separate registration review cases.

(3) Move an ingredient from one registration review case to another. For example, new data or information might suggest that an ingredient should not be grouped with the other ingredients in the registration review case and that it belongs in a different registration review case.

(4) Merge two or more registration review cases into a single registration review case. For example, new data or information might suggest that the active ingredients in two or more registration review cases should be grouped together for registration review.

(5) Delete an active ingredient from a registration review case. For example, the Agency will remove the ingredient from the case if the registrations of all products containing an active ingredient in a registration review case are canceled.

(c) *Closing a registration review case*. The Agency will close a registration review case if all products in the case are canceled.

(d) *Establishing a baseline date for a registration review case*. For the purpose of scheduling registration reviews, the Agency will establish a baseline date for each registration review case. In general, the baseline date will be the date of initial registration of the pesticide or the date of reregistration, whichever is later. For purposes of these procedures, the date of reregistration is the date on which the Reregistration Eligibility Decision or Interim Reregistration Decision was signed, whichever date the Agency determines to be more appropriate.

(1) The Agency generally will not change the baseline date for a registration review case when it modifies a case by adding or deleting ingredients or products.

(2) When the Agency splits a registration review case into two or more cases, the new case(s) generally will have the baseline date of the original registration review case.

(3) When the Agency merges two or more registration review cases into a single case, the Agency generally will use the earliest baseline date as the baseline date for the new case.

(e) *Announcing registration review cases and baseline dates*. The Agency will maintain a list of registration review cases, including baseline dates, on its website.

§ 155.44 Establish schedules for registration review.

The Agency will develop schedules for registration review that are generally based on the baseline date of the registration review case or on the date of the latest registration review of the registration review case. As indicated in § 155.40, the Agency may change the schedule of a pesticide's registration review if circumstances warrant. The Agency may also take into account other factors, such as achieving process efficiencies by reviewing related cases together, when developing schedules for registration review. The Agency will maintain schedules on its website.

§ 155.46 Deciding that a registration review is complete and additional review is not needed.

The Agency may determine that there is no need to reconsider a previous decision that a pesticide satisfies the standard of registration in FIFRA. In such cases, the Agency may propose that, based on its determination that a pesticide meets the FIFRA standard for registration, no further review will be necessary. In such circumstances, the Agency will publish a notice in the **Federal Register** announcing the availability of the proposed decision and provide a comment period of at least 60 calendar days. The Agency will publish a notice in the **Federal Register** announcing the availability of a final version of the decision, an explanation of any changes to the proposed decision, and its response to any comments.

§ 155.48 Data Call-In before, during, or after a registration review.

The Agency may issue a Data Call-In notice under FIFRA section 3(c)(2)(B) at any time before, during, or after a pesticide's registration review if the Agency believes that the data are needed to conduct the registration review. The provisions in FIFRA section 3(c)(1), (c)(2)(B), and (c)(2)(D) apply to the submission, compensation, and exemption of data required to conduct a registration review.

§ 155.50 Initiate a pesticide's registration review.

The Agency will initiate a pesticide's registration review by establishing a docket for each registration review case and opening it for public review.

(a) *Establish a registration review docket for each registration review case*. The Agency will establish a docket which it will maintain for the registration review of the pesticide. The Agency will place in this docket information that will assist the public in understanding the types of information and issues that the Agency may consider in the course of the registration review. The Agency will consider including, among other pieces of information:

(1) An overview of registration review case status;

(2) A list of current registrations and registrants, any **Federal Register** notice regarding pending registration actions, and current or pending tolerances;

(3) Risk assessment documents;

(4) Bibliographies concerning current registrations;

(5) Summaries of incident data; and

(6) Any other pertinent data or information.

(b) *Public review of the registration review case docket*. The Agency will publish a notice in the **Federal Register** announcing the availability for public review of the information described in paragraph (a) of this section and requesting that interested persons identify within 60 calendar days of publication any additional information they believe the Agency should consider in the course of the registration review.

(c) *Submission of data and other information*. The Agency may identify, either in the notice published under paragraph (b) of this section, or at any other time, data or information that it does not have but which may be useful, if available, for consideration in the registration review. Any person may submit data or information in response to such identification. In order to be considered during a pesticide's registration review, the submitted data or information must meet the requirements listed below.

(1) In order to guarantee that the Agency will consider data or information in the conduct of a registration review, interested persons must submit the data or information within 60 calendar days of publication of the notice described in paragraph (b) of this section or by some other time that the Agency may designate. The Agency may, at its discretion, consider data or information submitted at a later date.

(2) The data or information must be presented in a legible and useable form. For example, an English translation must accompany any material that is not in English, and a written transcript must accompany any information submitted as an audiographic or videographic record. Written material may be submitted in paper or electronic form.

(3) Submitters must clearly identify the source of any submitted data or information.

(4) Submitters may request the Agency to reconsider data or information that the Agency rejected in a previous review. However, submitters must explain why they believe the Agency should reconsider the data or information in the pesticide's registration review.

§ 155.52 Stakeholder engagement.

In addition to the public participation opportunities described in § 155.50 and § 155.53(c), the Agency may meet with stakeholders regarding a forthcoming or ongoing registration review. For example, before conducting a pesticide's registration review, the Agency may consult with registrants or pesticide users regarding the use and usage of the pesticide. The Agency may consult with registrants, pesticide users, or public interest groups during a pesticide's registration review with regard to developing risk management options for a pesticide. The Agency may informally consult with officials of Federal, State or Tribal agencies regarding a forthcoming or ongoing registration review.

(a) *Meetings with persons outside of government*. The Agency will place in the docket minutes of meetings with persons outside of government where the primary purpose of the meeting is to discuss a forthcoming or ongoing registration review. The Agency will place minutes of such meetings in the docket when it takes action under § 155.58. At its discretion, the Agency may place minutes of such meetings in the docket sooner.

(b) *Exchange of documents or other written material*. In the course of a meeting with a person outside of government, the Agency or that person may provide the other with a copy of a document or other written material that has not yet been released to the public. The Agency will place a copy of any such document or other written material in the docket along with the minutes of the meeting where the materials were exchanged.

(c) *Confidential business information*. The Agency will not place confidential business information in the docket.

§ 155.53 Conduct a pesticide's registration review.

The Agency will review data and information described in § 155.51 or submitted in response to a Data Call-In notice that it believes should be considered in the pesticide's registration review.

(a) *Assess changes since a pesticide's last review*. The Agency will assess any

changes that may have occurred since the Agency's last registration decision in order to determine the significance of such changes and whether the pesticide still satisfies the FIFRA standard for registration. The Agency will consider whether to conduct a new risk assessment to take into account, among other things, any changes in statutes or regulations, policy, risk assessment procedures or methods, or data requirements. The Agency will consider whether any new data or information on the pesticide, including any data or information submitted under § 155.50 or in response to a Data Call-In notice, warrant conducting a new risk assessment or a new risk/benefit assessment. The Agency will also consider whether any new data or information regarding an individual pesticide product, including any data or information submitted under § 155.50 or in response to a Data Call-In notice, such as data or information about an inert ingredient in the pesticide product or other information or data relating to the composition, labeling, or use of the pesticide product, warrant additional review of a pesticide product's registration.

(b) *Conduct new assessments as needed.* (1) Active ingredient(s) in the registration review case. If the Agency finds that a new assessment of the pesticide is needed, it will determine whether it can base the new assessment on available data or information, including data or information submitted under § 155.50 or in response to a Data Call-In notice. If sufficient data or information are available, the Agency will conduct the new risk assessment or risk/benefit assessment. If the Agency determines that additional data or information are needed to conduct the review, the Agency will issue a Data Call-In notice under FIFRA section 3(c)(2)(B).

(2) Individual product registrations. If the Agency finds that additional review of an individual product's registration is needed, it will review the pesticide product label, confidential statement of formula, product-specific data, or other pertinent data or information, as appropriate, to determine whether the registration of the individual product meets the FIFRA standard for registraton. If the Agency determines that additional data or information are needed to conduct the review, the Agency will issue a Data Call-In notice under FIFRA section 3(c)(2)(B).

(c) *Public participation during a pesticide's registration review.* The Agency will generally make available for public review and comment a draft risk assessment for a pesticide if a new risk assessment has been conducted. The Agency will publish a notice in the **Federal Register** announcing the availability of the draft risk assessment and provide a comment period of at least 30 calendar days. The Agency will publish a notice in the**Federal Register** announcing the availability of a revised risk assessment, an explanation of any changes to the proposed document, and its response to comments.

(1) The Agency might not ask for comments on a draft risk assessment in cases where the Agency's initial screening of a pesticide indicates that it has low use/usage, affects few if any stakeholders or members of the public, poses low risk, and/or requires little or no risk mitigation. In such cases, the Agency will make a draft risk assessment available for public review and comment when it issues a proposed decision on the registration review case.

(2) If the Agency finds that it is not necessary to conduct a new risk assessment, it will issue a proposed decision on the registration review case as described in § 155.58.

§ 155.56 Interim registration review decision.

The Agency may issue, when it determines it to be appropriate, an interim registration review decision before completing a registration review. Among other things, the interim registration decision may require new risk mitigation measures, impose interim risk mitigation measures, identify data or information required to complete the review, and include schedules for submitting the required data, conducting the new risk assessment and completing the registration review. A FIFRA section 3(c)(2)(B) notice requiring the needed data or information may precede, accompany, or follow issuance of the interim registration decision. The Agency will follow procedures in § 155.58 when issuing an interim registration review decision.

§ 155.57 Registration review decision.

A registration review decision is the Agency's determination whether a pesticide meets, or does not meet, the standard for registration in FIFRA.

§ 155.58 Procedures for issuing a decision on a registration review case.

(a) The Agency will publish a notice in the **Federal Register** announcing the availability of a proposed registration review decision or a proposed interim registration review decision. At that time, the Agency will place in the pesticide's registration review docket the Agency's proposed registration review decision and the bases for the decision. There will be a comment period of at least 60 calendar days on the proposed decision.

(b) In its proposed decision, the Agency will, among other things:

(1) State its proposed findings with respect to the FIFRA standard for registration and describe the basis for such proposed findings.

(2) Identify proposed risk mitigation measures or other remedies as needed and describe the basis for such proposed requirements.

(3) State whether it believes that additional data are needed and, if so, describe what is needed. A FIFRA section 3(c)(2)(B) notice requiring such data may precede, accompany, or follow issuance of a proposed or final decision on the registration review case or a proposed or final interim decision on a registration review case.

(4) Specify proposed labeling changes.

(5) Identify deadlines that it intends to set for completing any required actions.

(c) After considering any comments on the proposed decision, the Agency will issue a registration review decision or interim registration review decision. This decision will include an explanation of any changes to the proposed decision and the Agency's response to significant comments. The Agency will publish a notice in the **Federal Register** announcing the availability of a registration review decision or interim registration review decision. The registration review case docket will remain open until all actions required in the final decision on the registration review case have been completed.

(d) If the registrant fails to take the action required in a registration review decision or interim registration review decision, the Agency may take appropriate action under FIFRA.

[FR Doc. 05–13776 Filed 7–12–05; 8:45 am]

BILLING CODE 6560–50–S

FEDERAL COMMUNICATIONS COMMISSION

47 CFR Part 22

[WT Docket No. 04–435; DA 05–1712]

Facilitating the Use of Cellular Telephones and Other Wireless Devices Aboard Airborne Aircraft

AGENCY: Federal Communications Commission.

ACTION: Proposed rule; extension of reply comment period.

SUMMARY: In this document, the Wireless Telecommunications Bureau (WTB) of the Federal Communications Commission (Commission) extends the reply comment deadline established in the Notice of Proposed Rulemaking (*NPRM*) adopted by the Commission in the Airborne Cellular proceeding. This action is taken to provide interested parties sufficient time within which to respond meaningfully to the relevant issues raised in both the *NPRM* and in the recently-filed comments in this proceeding.

DATES: The agency must receive reply comments on or before August 11, 2005.

ADDRESSES: Interested parties may submit comments, identified by WT Docket No. 04–435, by any of the following methods:

- Federal eRulemaking Portal: *http://www.regulations.gov*. Follow the instructions for submitting comments.
- Federal Communications Commission's Web site: *http://www.fcc.gov/cgb/ecfs/*. Follow the instructions for submitting comments.
- E-mail: To receive filing instructions for e-mail comments, commenters should send an e-mail to *ecfs@fcc.gov*, and should include the following words in the body of the message, ''get form <*your e-mail address*>.'' A sample form and directions will be sent in reply. Include the docket number in the subject line of the message.
- Mail: Appropriate addresses for submitting comments and reply comments may be found in the **SUPPLEMENTARY INFORMATION** section of this document.
- People with Disabilities: Contact the FCC to request reasonable accommodations (accessible format documents, sign language interpreters, CART, etc.) by e-mail: *FCC504@fcc.gov* or phone: 202–418–0530 or TTY: 202–418–0432.

Instructions: All submissions received must include the agency name and docket number or Regulatory Information Number (RIN) for this rulemaking. All comments received will be posted without change to *http://www.fcc.gov/cgb/ecfs/*, including any personal information provided.

Docket: Interested parties may read the *NPRM* and submitted comments by accessing WT Docket 04–435 at *http://www.fcc.gov/cgb/ecfs/*.

FOR FURTHER INFORMATION CONTACT: Guy N. Benson, Wireless Telecommunications Bureau, at 202–418–2946, or via the Internet at *Guy.Benson@fcc.gov*.

SUPPLEMENTARY INFORMATION: This is a summary of the WTB's Order (*Order*), DA 05–1712, in WT Docket No. 04–435 (2005 WL 1489574 (FCC)), released June 23, 2005, which further extends the reply comment filing deadline in the Airborne Cellular proceeding. The full text of this document is available for public inspection and copying during regular business hours at the FCC Reference Information Center, 445 12th St., SW., Room CY–A257, Washington, DC 20554. The complete text may be purchased from the Commission's duplicating contractor: Best Copy & Printing, Inc., 445 12th Street, SW., Room CY–B402, Washington, DC 20554, telephone 800–378–3160, facsimile 202–488–5563, or via e-mail at *fcc@bcpiweb.com*. The full text may also be downloaded at: *http://www.fcc.gov*. Alternative formats are available to persons with disabilities by contacting Brian Millin at (202) 418–7426 or TTY (202) 418–7365 or at *Brian.Millin@fcc.gov*.

Synopsis of the Order

1. On December 15, 2004, the Commission adopted an *NPRM* in WT Docket No. 04–435; FCC 04–288 published at 70 FR 11916, March 10, 2005, in which it requested public comment regarding proposals to replace or relax the Commission's ban on airborne use of 800 MHz cellular handsets, as well as on other proposals to facilitate the use of wireless handsets and devices on airborne aircraft.

2. Pursuant to several extension requests, the WTB released an April 6, 2005 *Order* in WT Docket No. 04–435; DA 05–1015 published at 70 FR 21724, April 27, 2005, in which the Commission extended the comment and reply comment deadlines from April 11, 2005, and May 9, 2005, respectively, to May 26, 2005, and June 27, 2005, respectively.

3. On June 13, 2005, CTIA–The Wireless Association (''CTIA'') submitted a request seeking a further extension of time to file reply comments in this proceeding. The Boeing Company, Cingular Wireless LLC and Cellco Partnership d/b/a Verizon Wireless, and QUALCOMM Incorporated filed comments in support of CTIA's request. The parties argue that a further extension of the reply comment period would permit interested parties to conduct a more thorough review of all the issues raised by the comments and to submit more detailed and meaningful responses.

4. Although it is the policy of the Commission that extensions of time shall not be routinely granted, an extension of time in this instance will aid in clarifying the complex issues raised in the record of this proceeding. In order to provide interested parties sufficient time within which to respond meaningfully to the relevant issues raised in the *NPRM* and the record, the reply comments deadline in this proceeding is extended, by forty-five days, to August 11, 2005.

Ordering Clause

5. Pursuant to sections 4(i) and 4(j) of the Communications Act of 1934, as amended, 47 U.S.C. 154(i) and 154(j), and §§ 0.131, 0.331, and 1.46 of the Commission's rules, 47 CFR 0.131, 0.331, and 1.46, the deadline for filing reply comments in response to the *NPRM*, published on March 10, 2005, in WT Docket No. 04–435, is extended to August 11, 2005.

List of Subjects in 47 CFR Part 22

Communications common carriers, and Radio.

Federal Communications Commission.

Linda C. Chang,

Associate Chief, Mobility Division, Wireless Telecommunications Bureau.

[FR Doc. 05–13361 Filed 7–12–05; 8:45 am]

BILLING CODE 6712–01–P

FEDERAL COMMUNICATIONS COMMISSION

47 CFR Part 73

[DA 05–1737; MB Docket No. 04–389, RM–11090]

Radio Broadcasting Services; Boyce, LA

AGENCY: Federal Communications Commission.

ACTION: Proposed rule; denial.

SUMMARY: The Audio Division has denied the request of Charles Crawford to allot Channel 222A at Boyce, Louisiana. Charles Crawford filed a petition for rule making proposing the allotment of Channel 222A at Boyce, Louisiana, as the community's second local FM transmission service. *See* 69 FR 61615–16, October 20, 2004. The proposal was dismissed for failure to demonstrate a continuing interest in the requested allotment.

FOR FURTHER INFORMATION CONTACT: Deborah Dupont, Media Bureau, (202) 418–2180.

SUPPLEMENTARY INFORMATION: This is a synopsis of the Commission's *Report and Order*, MB Docket No. 04–389, adopted June 22, 2005, and released June 24, 2005. The full text of this Commission decision is available for inspection and copying during normal business hours in the FCC Information

Center, Portals II, 445 12th Street, SW., Room CY–A257, Washington, DC 20554. The complete text of this decision also may be purchased from the Commission's duplicating contractor, Best Copy and Printing, Inc., 445 12th Street, SW., Room CY–B402, Washington, DC, 20554, (800) 378–3160, or via the company's Web site, *http://www.bcpiweb.com*. This document is not subject to the Congressional Review Act. The Commission is, therefore, not required to send a copy of this *Report and Order* in a report to be sent to Congress and the Government Accountability Office pursuant to the Congressional Review Act, *see* U.S.C. 801(a)(1)(A), because the proposed rule was dismissed.

Federal Communications Commission.

John A. Karousos,

Assistant Chief, Audio Division, Media Bureau.

[FR Doc. 05–13466 Filed 7–12–05; 8:45 am]

BILLING CODE 6712–01–P

FEDERAL COMMUNICATIONS COMMISSION

47 CFR Part 73

[DA 05–1779; MB Docket No. 05–219, RM–11249]

Radio Broadcasting Services; Brawley and Campo, CA

AGENCY: Federal Communications Commission.

ACTION: Proposed rule.

SUMMARY: The Audio Division seeks comment on a petition filed by CCR-Brawley IV, LLC, proposing the downgrade from Channel 241B to Channel 241B1 at Brawley, the reallotment of Channel 241B1 from Brawley to Campo, California, and the modification of Station KSIQ(FM)'s license accordingly. Channel 241B1 can be reallotted to Campo in compliance with the Commission's minimum distance separation with a site restriction of 3.9 kilometers (1.4 miles) north at petitioner's requested site. The coordinates for Channel 241B1 at Campo are 32–38–30 North Latitude and 116–28–05 West Longitude. Since Campo is located within 320 kilometers (199 miles) of the U.S.-Mexican border, concurrence of the Mexican government has been requested. In accordance with the provisions of Section 1.420(i) of the Commission's rules, we shall not accept competing expressions of interest for the use of Channel 241B1 at Campo, California.

DATES: Comments must be filed on or before August 18, 2005, and reply comments on or before September 2, 2005.

ADDRESSES: Federal Communications Commission, 445 Twelfth Street, SW., Washington, DC 20554. In addition to filing comments with the FCC, interested parties should serve Counsel for Petitioner as follows: Howard M. Liberman, Esq., Drinker, Biddle & Reath, LLP, 1500 K Street, NW., Suite 1100, Washington, DC 20005.

FOR FURTHER INFORMATION CONTACT: Sharon P. McDonald, Media Bureau, (202) 418–2180.

SUPPLEMENTARY INFORMATION: This is a summary of the Commission's Notice of Proposed Rule Making, MB Docket No. 05–219, adopted June 23, 2005, and released June 27, 2005. The full text of this Commission decision is available for inspection and copying during normal business hours in the Commission's Reference Center, 445 Twelfth Street SW., Washington, DC 20554. The complete text of this decision may also be purchased from the Commission's duplicating contractor, Best Copy and Printing, Inc., 445 12th Street, SW., Room CY–B402, Washington, DC 20054, telephone 1–800–378–3160 or *http://www.BCPIWEB.com*. This document does not contain proposed information collection requirements subject to the Paperwork Reduction Act of 1995, Public Law 104–13. In addition, therefore, it does not contain any proposed information collection burden ''for small business concerns with fewer than 25 employees,'' pursuant to the Small Business Paperwork Relief Act of 2002, Public Law 107–198, *see* 44 U.S.C. 3506(c)(4).

Provisions of the Regulatory Flexibility Act of 1980 do not apply to this proceeding.

Members of the public should note that from the time a Notice of Proposed Rule Making is issued until the matter is no longer subject to Commission consideration or court review, all *ex parte* contacts are prohibited in Commission proceedings, such as this one, which involve channel allotments. See 47 CFR 1.1204(b) for rules governing permissible *ex parte* contact.

For information regarding proper filing procedures for comments, see 47 CFR 1.415 and 1.420.

List of Subjects in 47 CFR Part 73

Radio, Radio broadcasting.

For the reasons discussed in the preamble, the Federal Communications Commission proposes to amend 47 CFR part 73 as follows:

PART 73—RADIO BROADCAST SERVICES

1. The authority citation for part 73 continues to read as follows:

Authority: 47 U.S.C. 154, 303, 334 and 336.

§ 73.202 [Amended]

2. Section 73.202(b), the Table of FM Allotments under California, is amended by removing Channel 241B at Brawley; and by adding Campo, Channel 241B1.

Federal Communications Commission.

John A. Karousos,

Assistant Chief, Audio Division, Media Bureau.

[FR Doc. 05–13465 Filed 7–12–05; 8:45 am]

BILLING CODE 6712–01–P

FEDERAL COMMUNICATIONS COMMISSION

47 CFR Part 73

[DA 05–1859; MB Docket No. 04–404, RM–11098, RM–11233]

Radio Broadcasting Services; Cromwell and Maysville, OK

AGENCY: Federal Communications Commission.

ACTION: Proposed rule; dismissal.

SUMMARY: The Audio Division dismisses a Petition for Rule Making filed by Charles Crawford, requesting the allotment of Channel 251A at Maysville, Oklahoma, as its first local service. *See* 69 FR 65119, published November 10, 2004. The document also dismisses a counterproposal filed by Katherine Pyeatt, requesting the allotment of Channel 251A at Crowell, Oklahoma. The parties in this proceeding filed a withdrawal of their respective expression of interest pursuant to Section 1.420(j) of the Commission's rules. It is the Commission's policy to refrain from making a new allotment to a community absent a *bona fide* expression of interest.

ADDRESSES: Federal Communications Commission, 445 Twelfth Street, SW., Washington, DC 20554.

FOR FURTHER INFORMATION CONTACT: Rolanda F. Smith, Media Bureau, (202) 418–2180.

SUPPLEMENTARY INFORMATION: This is a synopsis of the Commission's Report and Order, MB Docket No. 04–404, adopted June 29, 2005, and released July 1, 2005. The full text of this Commission decision is available for inspection and copying during regular business hours at the FCC's Reference Information Center, Portals II, 445

Twelfth Street, SW., Room CY–A257, Washington, DC 20554. The complete text of this decision may also be purchased from the Commission's duplicating contractor, Best Copy and Printing, Inc., 445 12th Street, SW., Room CY–B402, Washington, DC 20054, telephone 1–800–378–3160 or *http://www.BCPIWEB.com*. This document is not subject to the Congressional Review Act. (The Commission is, therefore, not required to submit a copy of this Report and Order to GAO, pursuant to the Congressional Review Act, *see* 5 U.S.C. 801(a)(1)(A) because the proposed rule was dismissed.

Federal Communications Commission.

John A. Karousos,

Assistant Chief, Audio Division, Media Bureau.

[FR Doc. 05–13738 Filed 7–12–05; 8:45 am]

BILLING CODE 6712–01–P

DEPARTMENT OF DEFENSE

GENERAL SERVICES ADMINISTRATION

NATIONAL AERONAUTICS AND SPACE ADMINISTRATION

48 CFR Part 52

[FAR Case 2004–031]

RIN 9000–AK24

Federal Acquisition Regulation; Fast Payment Procedures

AGENCIES: Department of Defense (DoD), General Services Administration (GSA), and National Aeronautics and Space Administration (NASA).

ACTION: Proposed rule.

SUMMARY: The Civilian Agency Acquisition Council and the Defense Acquisition Regulations Council (Councils) are proposing to amend the Federal Acquisition Regulation (FAR) by revising fast payment procedures. The proposed revision permits, but does not require, fast payment when invoices and/or outer shipping containers are not marked ''Fast Pay'' provided the contract includes the ''Fast Payment Procedure'' clause. As highlighted in the proposed clause, if the clause is in the contract, the invoices will no longer be rejected, as is the current practice. Instead, they will be paid using either fast payment or normal payment procedures. In addition, the proposed revision deletes the requirement for marking invoices ''No Receiving Report Prepared.''

DATES: Interested parties should submit comments in writing on or before September 12, 2005, to be considered in the formulation of a final rule.

ADDRESSES: Submit comments identified by FAR case 2004–031 by any of the following methods:

- Federal eRulemaking Portal: *http://www.regulations.gov*. Follow the instructions for submitting comments.
- Agency Web Site: *http://www.acqnet.gov/far/ProposedRules/proposed.htm*. Click on the FAR case number to submit comments.
- E-mail: *farcase.2004–031@gsa.gov*. Include FAR case 2004–031 in the subject line of the message.
- Fax: 202–501–4067.
- Mail: General Services Administration, Regulatory Secretariat (VIR), 1800 F Street, NW, Room 4035, ATTN: Laurieann Duarte, Washington, DC 20405.

Instructions: Please submit comments only and cite FAR case 2004–031 in all correspondence related to this case. All comments received will be posted without change to *http://www.acqnet.gov/far/ProposedRules/proposed.htm*, including any personal information provided.

FOR FURTHER INFORMATION CONTACT The FAR Secretariat at (202) 501–4755 for information pertaining to status or publication schedules. For clarification of content, contact Mr. Jeremy Olson, at (202) 501–3221. Please cite FAR case 2004–031.

SUPPLEMENTARY INFORMATION:

A. Background

This FAR case was initiated at the request of the DoD Acting Deputy Chief Financial Officer (CFO), OUSD (Comptroller), who believes FAR 52.213–1, Fast Payment Procedure, should be revised to correct a deficiency found during an internal review, namely, that many invoices were not prominently marked ''FAST PAY.'' The CFO recommends that the FAR be revised to:

- Address both hard copy invoices and electronic invoices so that they may be accepted by the payment office if the ''fast payment'' clause is annotated manually or electronically in the contract record; and
- Delete the requirement for marking invoices ''NO RECEIVING REPORT PREPARED.''

Requirement to mark invoices and outer shipping containers ''Fast Pay.'' The current requirement to display ''Fast Pay'' prominently on the invoices and outer shipping containers causes payment problems. This requirement forces payment offices to reject invoices when the invoices and/or the outer shipping containers are not marked ''Fast Pay,'' even though the contract contains the fast payment clause. The Councils believe that the FAR should be revised to provide the payment office flexibility to make fast payments when invoices and/or outer shipping containers are not marked ''Fast Pay.'' The proposed language permits, but does not require, fast payment when invoices and/or outer shipping containers are not marked ''Fast Pay'' provided the contract includes the ''Fast Payment Procedure'' clause. Under the proposed language, when the payment office decides to not process invoices as ''Fast Pay'' because the proper markings were not present, the payment date will be the payment date that would have applied had the ''Fast Pay Procedures'' clause not been in the contract. In this manner, an unmarked invoice will not be rejected. It is important to note that this change does not eliminate the requirement for the contractor to annotate an invoice ''Fast Pay;'' the contractor remains at risk that fast payment procedures will not be applied unless the invoice is annotated accordingly.

Requirement to include the statement ''No Receiving Report Prepared.'' The current requirement to mark invoices ''No Receiving Report Prepared'' also causes payment problems as discussed above. In addition, the marking is misleading. A receiving report may be prepared for the contract, but if so, under fast pay procedures it is normally still in processing channels when the invoice arrives at the payment office. However, if a receiving report is not prepared, it is still imperative that the invoice includes sufficient information to facilitate follow-up verification that the item was received. The current FAR and the proposed revision both include a requirement for such information on the invoice. The difference is simply that the proposed revision does not require the statement ''No Receiving Report Prepared'' on the invoice.

This is not a significant regulatory action and, therefore, was not subject to review under Section 6(b) of Executive Order 12866, Regulatory Planning and Review, dated September 30, 1993. This rule is not a major rule under 5 U.S.C. 804.

B. Regulatory Flexibility Act

The Councils do not expect this proposed rule to have a significant economic impact on a substantial number of small entities within the meaning of the Regulatory Flexibility Act, 5 U.S.C. 601, *et seq.*, because it will have a beneficial, but small, impact.

Small businesses which fail to follow the fast payment clause instructions to mark the invoice ''FAST PAY'', will have their invoices rejected, which means they would not be paid until they send in a corrected invoice. The clause revisions mean the invoices would not have to be automatically rejected. An Initial Regulatory Flexibility Analysis has, therefore, not been performed. We invite comments from small businesses and other interested parties. The Councils will consider comments from small entities concerning the affected FAR Part 52 in accordance with 5 U.S.C. 610. Interested parties must submit such comments separately and should cite 5 U.S.C. 601, *et seq.* (FAR case 2004–031), in correspondence.

C. Paperwork Reduction Act

The Paperwork Reduction Act does not apply because the proposed changes to the FAR do not impose information collection requirements that require the approval of the Office of Management and Budget under 44 U.S.C. 3501, *et seq.*

List of Subjects in 48 CFR Part 52

Government procurement.

Dated: July 5, 2005.

Gerald Zaffos,

Deputy Director, Contract Policy Division.

Therefore, DoD, GSA, and NASA propose amending 48 CFR part 52 as set forth below:

PART 52—SOLICITATION PROVISIONS AND CONTRACT CLAUSES

1. The authority citation for 48 CFR part 52 is revised to read as follows:

Authority: 40 U.S.C. 121(c); 10 U.S.C. chapter 137; and 42 U.S.C. 2473(c).

2. Amend section 52.213–1 by revising the date of the clause and paragraphs (c)(1)(ii), (c)(3), and (e) to read as follows:

52.213–1 Fast Payment Procedure.

* * * * *

FAST PAYMENT PROCEDURE (DATE)

* * * * *

(c) * * *

(1) * * *

(ii) Display prominently on the invoice ''FAST PAY.'' Invoices not prominently marked ''Fast Pay'' via manual or electronic means may be accepted by the payment office for fast payment. If the payment office declines to make fast payment, the Contractor shall be paid in accordance with procedures applicable to invoices to which the Fast Payment clause does not apply.

* * * * *

(3) If this contract, order, or blanket purchase agreement requires the preparation of a receiving report, the Contractor shall either—

(i) Submit the receiving report on the prescribed form with the invoice; or

(ii) Include the following information on the invoice:

(A) Shipment number.

(B) Mode of shipment.

(C) At line item level—

(*1*) National stock number and/or manufacturer's part number;

(*2*) Unit of measure;

(*3*) Ship-To Point;

(*4*) Mark-For Point, if in the contract; and

(*5*) FEDSTRIP/MILSTRIP document number, if in the contract.

* * * * *

(e) Fast pay container identification. The Contractor shall mark all outer shipping containers ''FAST PAY.'' When outer shipping containers are not marked ''Fast Pay,'' the payment office may make fast payment. If the payment office declines to make fast payment, the Contractor shall be paid in accordance with procedures applicable to invoices to which the Fast Payment clause does not apply.

(End of clause)

[FR Doc. 05–13617 Filed 7–12–05; 8:45 am]

BILLING CODE 6820–EP–S

DEPARTMENT OF TRANSPORTATION

National Highway Traffic Safety Administration

49 CFR Part 571

[Docket No. NHTSA–2005–21244]

RIN 2127–AJ59

Federal Motor Vehicle Safety Standards; Occupant Crash Protection

AGENCY: National Highway Traffic Safety Administration (NHTSA), Department of Transportation (DOT).

ACTION: Extension of comment period.

SUMMARY: NHTSA received a letter asking us to extend the comment period for the Notice of Proposed Rulemaking (NPRM) to amend the Federal motor vehicle safety standard (FMVSS) for occupant crash protection. The agency has proposed to amend FMVSS No. 208, *Occupant crash protection*, by establishing a test procedure applicable to vehicles equipped with a child restraint anchorage system, commonly referred to as a ''LATCH'' system, in a front passenger seating position and that comply with advanced air bag requirements through the use of a suppression system. The proposed procedures specify a repeatable, reproducible, and realistic method of attaching child restraints to the LATCH system for the suppression test.

To provide interested persons additional time to prepare comments, we are extending the end of the comment period from July 18, 2005, to August 17, 2005. This 30-day extension will allow vehicle manufacturers the appropriate opportunity to review a technical report cited in the NPRM in support of the agency's proposal, and provide more meaningful comments.

DATES: You should submit comments early enough to ensure that Docket Management receives them not later than August 17, 2005.

ADDRESSES: You may submit comments by any of the following methods:

- Web Site: *http://dms.dot.gov.* Follow the instructions for submitting comments on the DOT electronic docket site.
- Fax: 1–202–493–2251.
- Mail: Docket Management Facility; U.S. Department of Transportation, 400 Seventh Street, SW., Nassif Building, Room PL–401, Washington, DC 20590–001.
- Hand Delivery: Room PL–401 on the plaza level of the Nassif Building, 400 Seventh Street, SW., Washington, DC, between 9 a.m. and 5 p.m., Monday through Friday, except Federal Holidays.
- Federal eRulemaking Portal: Go to *http://www.regulations.gov.* Follow the online instructions for submitting comments.

Instructions: All submissions must include the agency name and docket number or Regulatory Identification Number (RIN) for this rulemaking. Note that all comments received will be posted without change to *http://dms.dot.gov*, including any personal information provided. Please see discussion of the Privacy Act below.

Docket: For access to the docket to read background documents or comments received, go to *http://dms.dot.gov* at any time or to Room PL–401 on the plaza level of the Nassif Building, 400 Seventh Street, SW., Washington, DC, between 9 a.m. and 5 p.m., Monday through Friday, except Federal Holidays.

FOR FURTHER INFORMATION CONTACT: For non-legal issues, you may contact Lou Molino, Office of Crashworthiness Standards, Light Duty Vehicle Division by phone at (202) 366–1740, and by fax at (202) 493–2739.

For legal issues, you may contact Christopher Calamita of the NHTSA Office of Chief Counsel by phone at

(202) 366–2992 and by fax at (202) 366–3820.

You may send mail to both of these officials at the National Highway Traffic Safety Administration, 400 Seventh St., SW., Washington, DC 20590.

SUPPLEMENTARY INFORMATION: On May 19, 2005, the agency published in the **Federal Register** a notice of proposed rulemaking (NPRM) to amend Federal Motor Vehicle Safety Standard (FMVSS) No. 208, *Occupant crash protection* (70 FR 28878). We proposed test procedures applicable to vehicles that have a child restraint anchorage system, commonly referred to as a ''LATCH'' system, in a front passenger seating position and that comply with advanced air bag requirements through the use of a suppression system. Beginning September 1, 2006, these vehicles must suppress the air bag in the presence of a child restraint system that is attached to the vehicle's LATCH system. The procedures proposed in the NPRM specify a repeatable, reproducible, and realistic method of attaching child restraints to the LATCH system for the suppression test.

The proposed procedure was developed by NHTSA to replicate real-world CRS installations in vehicles by experienced installers, particularly with respect to the appropriate load vector to be applied and the amount of load relief when LATCH belts are manually tightened. The procedure was developed using four installers working with three vehicles and four CRSs. The agency prepared a technical report detailing this development. The NPRM was published May 19, 2005, and open for a 60-day comment period. However, public availability of the technical report was delayed until after the comment period had started.

On June 20, 2005, we received a letter from the Alliance of Automobile Manufacturers (Alliance) [1] requesting an extension of the comment period. The Alliance stated that because of the delay it is not able to adequately review the technical report and prepare comments by the close of comment period. Further, the Alliance stated that some of the illustrations in the technical report were not legible. The Alliance therefore requested a short extension of the comment period.

As stated in the NPRM, the proposed procedure is for child restraint systems to which vehicles must certify under the suppression requirements, beginning September 1, 2006. Consequently, we believe the 30-day extension of the comment period will not adversely affect safety. Further, we believe that providing additional time for review of the technical report will result in more helpful comments. We note that the technical report has been resubmitted to the docket with legible illustrations.

Privacy Act: Anyone is able to search the electronic form of all submissions received into any of our dockets by the name of the individual submitting the comment or petition (or signing the comment or petition, if submitted on behalf of an association, business, labor union, etc.). You may review DOT's complete Privacy Act Statement in the **Federal Register** published on April 11, 2000 (volume 65, number 70; pages 19477–78), or you may visit *http://dms.dot.gov.*

Authority: 49 U.S.C. 322, 30111, 30115, 30117, and 30166; delegation of authority at 49 CFR 1.50.

Issued on July 8, 2005.

Stephen R. Kratzke,

Associate Administrator for Rulemaking.

[FR Doc. 05–13760 Filed 7–12–05; 8:45 am]

BILLING CODE 4910–59–P

[1] The Alliance is a trade association of nine automobile manufacturers, including BMW Group, DaimlerChrysler, Ford Motor Company, General Motors, Mazda, Mitsubishi Motors, Porsche, Toyota, and Volkswagen.

DEPARTMENT OF TRANSPORTATION

National Highway Traffic Safety Administration

49 CFR Part 572

[Docket No. NHTSA–2004–21247]

RIN 2127–AJ49

Anthropomorphic Test Devices; Hybrid III–10 Year Old Child Test Dummy

AGENCY: National Highway Traffic Safety Administration (NHTSA), Department of Transportation (DOT).

ACTION: Notice of proposed rulemaking (NPRM).

SUMMARY: Today's NPRM proposes specifications and qualification requirements for the new test dummy that is representative of a 10-year-old child. NHTSA plans to use the new 10-year-old child test dummy to test child restraints under Federal Motor Vehicle Safety Standard No. 213 and in other applications. The dummy has the capability to be placed in a slouched posture, which allows the evaluation of vehicle belt systems under real world occupant conditions.

DATES: You should submit your comments early enough to ensure that Docket Management receives them not later than September 12, 2005.

ADDRESSES: You may submit comments (identified by the DOT DMS Docket Number) by any of the following methods:

- Web Site: *http://dms.dot.gov.* Follow the instructions for submitting comments on the DOT electronic docket site.
- Fax: 1–202–493–2251.
- Mail: Docket Management Facility; U.S. Department of Transportation, 400 Seventh Street, SW, Nassif Building, Room PL–401, Washington, DC 20590–001.
- Hand Delivery: Room PL–401 on the plaza level of the Nassif Building, 400 Seventh Street, SW., Washington, DC, between 9 am and 5 pm, Monday through Friday, except Federal Holidays.
- Federal eRulemaking Portal: Go to *http://www.regulations.gov.* Follow the online instructions for submitting comments.

Instructions: All submissions must include the agency name and docket number or Regulatory Identification Number (RIN) for this rulemaking. For detailed instructions on submitting comments and additional information on the rulemaking process, see the Public Participation heading of the **SUPPLEMENTARY INFORMATION** section of this document. Note that all comments received will be posted without change to *http://dms.dot.gov,* including any personal information provided. Please see the Privacy Act discussion under the Public Participation heading.

Docket: For access to the docket to read background documents or comments received, go to *http://dms.dot.gov* at any time or to Room PL–401 on the plaza level of the Nassif Building, 400 Seventh Street, SW., Washington, DC, between 9 am and 5 pm, Monday through Friday, except Federal Holidays.

FOR FURTHER INFORMATION CONTACT: For non-legal issues, you may call Stan Backaitis, NHTSA Office of Crashworthiness Standards (telephone 202–366–4912). For legal issues, you may call Chris Calamita, NHTSA Office of Chief Counsel (telephone 202–366–2992). You may send mail to these officials at the National Highway Traffic Safety Administration, 400 Seventh St., SW., Washington, DC 20590.

SUPPLEMENTARY INFORMATION:

Table of Contents

I. Anton's Law
II. Overview
III. Background
  A. Need for the dummy
  B. Evolution of the dummy
IV. General Description

A. Biofidelic consistency of the HIII 10-year-old dummy with the Hybrid III 50th percentile component responses
B. Repeatability and reproducibility
C. Component tests
D. Sled tests
V. The Dummy's Response Sensitivity and Structural Durability
A. Sensitivity of responses to booster seat design
B. Sensitivity of response to dummy's posture
C. Sensitivity of the dummy in three point belt applications
D. Sensitivity of dummy response and durability in NCAP pulse and different restraint systems
E. Dummy performance in OOP Environment
1. Test Set-Up
2. General Observations
3. Neck Durability
4. Response Differences Due to Dummy Makes
5. Dummy Positioning
VI. Proposed Calibration Tests
A. Head drop specification
B. Neck pendulum test
C. Knee impact
D. Thorax impact
E. Torso flexion
VII. Benefits and Costs
VIII. Public Participation
IX. Rulemaking Analyses and Notices

I. Anton's Law

On December 4, 2002, the President signed Pub. L. 107–318, ''Anton's Law,'' in order ''to provide for the improvement of the safety of child restraints in passenger motor vehicles, and other purposes.'' Section 4 of Anton's Law directed that:

(a) Not later than 24 months after the date of the enactment of this Act, the Secretary [of Transportation] shall develop and evaluate an anthropomorphic test device that simulates a 10-year-old child for use in testing child restraints used in passenger motor vehicles;

(b) Within 1 year following the development and evaluation carried out under subsection (a), the Secretary shall initiate a rulemaking proceeding for the adoption of anthropomorphic test device as developed under subsection (a).

In September 2004, the agency completed evaluation of the HIII–10C and tentatively determined that it is suitable for use in testing child restraints.

II. Overview

Today's NPRM proposing to adopt specifications and performance criteria for the HIII–10C into 49 CFR Part 572 initiates the rulemaking referenced in Section 4(b) of Anton's Law. The test dummy is based on recent growth charts for U.S. children and scaled measurements from the Hybrid III family of dummies. The Hybrid III 10-year-old test dummy (referred to as the ''HIII–10C'') has a seated height of 2 feet 5 inches, a standing height of 4 feet 3 inches, and weighs 77.6 pounds (35 kilograms). By seated height and weight it very closely approximates the average 10-year-old child in the U.S. Additionally, the HIII–10C has been designed to more closely replicate the posture of older children than current Hybrid III test dummies, which can enable the dummy to more closely replicate older children interacting with seat belt systems. The HIII–10C has an adjustable lumbar spine that allows the dummy to slouch and a shoulder construction that provides a more representative interaction of the shoulder and shoulder belt.

Consideration is underway at NHTSA on using the HIII–10C in compliance tests of child restraints under Federal Motor Vehicle Safety Standard (FMVSS) No. 213, ''Child restraint systems'' (49 CFR 571.213). The agency is proposing to expand the applicability of the standard to restraints recommended for children weighing up to 80 pounds (36 kilograms). The proposed amendment to FMVSS No. 213 is intended to ensure that all child restraint systems, including booster seats, are robustly assessed to make sure that they would perform soundly in a 30 mile per hour (mph) crash when used by children at the upper limit of their recommended weight range (*e.g.*, up to 80 lb). The agency tentatively believes that the dummy is a sound test device that will provide valuable data in assessing the potential for injury of child restraint system (CRS) occupants that weigh more than 50 lb in a 30 mph crash.

III. Background

A. Need for the Dummy

The agency has long recognized the need for a test dummy representative of a child larger than that currently represented by the Hybrid III 6-year-old test dummy (HIII–6YO). Some child restraint manufacturers began offering child restraints for children weighing 50 lb and greater. The agency has wanted to expand the applicability of FMVSS No. 213 to increase the likelihood that child restraints will provide robust protection for a wider array of children. This interest goes hand-in-hand with efforts to increase booster seat use among children who have outgrown their harness-equipped child safety seat, but who cannot adequately fit a vehicle's lap and shoulder belt system. (The agency advises that children between the ages of 4-to 8-years of age should remain in a belt-positioning booster seat and secured with a vehicle's lap/shoulder belt, unless they are a minimum 4 feet and 9 inches tall.)

Agency reports have indicated that older children do not fit properly into vehicle safety belt systems without the use of a child restraint system (*e.g.*, a belt-positioning booster seat). This poor fit is due to the fact that children have highly sloped shoulders and tend to sit slouched in vehicle seats because their legs are too short to maintain an upright seat posture. In a crash, slouched child show a tendency to ''submarine;'' *i.e.*, the child may slide under the lap belt, which in most cases causes the lap belt to load the abdomen, while the shoulder belt may migrate into the child's upper neck area. In such an event a child would be exposed to forces that could result in serious abdomen, lumbar and cervical spine injuries.

Use of a belt-positioning booster seat improves the fit of a vehicle's lap/shoulder belt system for children 10 years of age and younger. In conjunction with a vehicle's lap/shoulder belt, a belt-positioning booster provides a 5-to 8-year-old child with the same level of safety as a 9-to 14-year-old child receives from use of a lap/shoulder belt only. When used in conjunction with a booster seat, the effectiveness of a lap/shoulder belt for a child between the ages of 5 and 8 years improves from 48 percent to 54 percent.[1]

Adding a new child test dummy to the array of devices used to test child restraints will enhance child passenger safety. Currently, the oldest child represented by an instrumented dummy in FMVSS No. 213 is a 6-year-old child. The agency has tentatively determined that the HIII–10C will permit a useful evaluation of booster seats that are recommended for children weighing up to 80 lb (36 kg), and help ensure that these restraints meet the dynamic test requirements of FMVSS No. 213.

B. Evolution of the Dummy

In 1994, the agency began to investigate if the introduction of a test dummy larger than the 6-year-old test dummy would benefit the development of safety improvements in occupant restraint systems. Initially, the agency considered the P10 test dummy, which is part of the P series of test dummies used primarily in Europe. The P10 was intended to replicate the size and weight of a 10-year-old child. However, the agency had concerns with the

[1] *See*, ''Effectiveness of Lap/Shoulder Belts in the Back Outboard Seating Positions,'' Evaluation Division, Plans and Policy, NHTSA. Washington, DC, June 1999. DOT HS 808 945.

stability and predictability of the P10's kinematic structure, its limited instrumentation capabilities, and the fact that it weighs 10 lbs. less than the average 10-year-old child. As a result of these concerns, the agency decided against using the P10.

The agency initiated discussions in 1999 with the Hybrid III Dummy Family Task Group (DFTG) at the Society of Automotive Engineers (SAE) on the need to develop a child type test dummy approximating the average 10-year-old. DFTG noted that such a dummy would be useful in the evaluation of booster seats and the injury causing potential of passenger side air bags, and agreed to develop a Hybrid III 10-year-old dummy.[2] By the spring of 2001 the first prototype was constructed under a collaborative effort between dummy manufacturers First Technology Safety Systems (FTSS) and Denton ATD (Denton).[3] After preliminary testing and minor modifications, the agency was furnished a production prototype of the DFTG-approved dummy for its initial assessment. Subsequently, the agency bought two dummies for more rigorous testing and evaluation.

During the development of the 10-year-old dummy, the Transportation Recall Enhancement, Accountability, and Documentation (TREAD) Act (Pub. L. 106–414, November 1, 2000) was signed. The TREAD Act in part directed that the agency determine whether the safety of children would be improved if additional anthropomorphic test devices were used, including a test dummy representative of a 10-year-old dummy. NHTSA updated Federal Motor Vehicle Safety Standard (FMVSS) No. 213 in response to the TREAD Act (68 FR 37620; June 24, 2003; Docket No. 15351), but the 10-year-old dummy was not sufficiently developed for inclusion in that rulemaking.

IV. General Description

The HIII–10C was targeted to represent a 10-year-old child as defined by the National Center for Health Statistics for the Center for Disease Control (NCHS–CDC) growth charts published in December 2000 for children between 2 and 20 years of age and has the same general construction as the adult dummies of the Hybrid III dummy family. The HIII–10C has a seated height of 2 feet 5 inches, a weight of 77.6 pounds, and a standing height of 4 feet 3 inches. Table I below compares the major characteristics of the dummy with the U.S. growth charts.

TABLE I.—COMPARISON OF TEST DUMMIES AND PEOPLE

	Seated Height**, **** (feet & inches)		H–III	Weight (lb)*, ****		Standing Height (feet & inches)*, ***, ****
	H–III	People (min/ave/max)		People (min/ave/max)	H–III	People (min/ave/max)
5th Percentile Female	2′7″	(2′4″/2′7″/2′9″)	108	(101/106/117)	4′11″	(4′8″4′11″/5′1″)
10-year-old	2′5″	(2′2″/2′4″/2′6″)	77.6	(57.7/79.3/120.2)	4′3″	(4′4″/4′8″/5′1″)
6-year-old	2′1″	(1′10″/2′0″/2′2″)	51.6	(37.2/47.2/75.5)	3′9″	(3′7″/3′11″/4′3″)

* Data from CDC Growth Charts (1988–1994), U.S. Department of Health and Human Services, Centers for Disease Control and Prevention, December 4, 2000.
** Anthropometry of U.S. Infants and Children, SAE SP–394, 1975 SAE Automotive Engineering Congress and Exhibition, Detroit, MI, 1975. ′
*** Erect posture; calculated, rounded to the nearest whole number (dummies are built in seated posture).
**** Average of male and female.

Table I demonstrates that the HIII–10C fits reasonably well between the 6-year-old and 5th percentile adult female test dummies. (A 5th percentile adult female is about the size of a 12-year-old.)

Additional anthropomorphic dimensions and masses of the HII–10C were based on scaling those specifications from the HIII 50th percentile adult male dummy rather than the 5th percentile female dummy. The decision to scale down from the male dummy was based on the fact that the 50th percentile male dummy was supported by a well established biomechanical database, while all other Hybrid III dummies were scaled down versions from the 50th percentile male dummy. Accordingly, there was no advantage to scale down from another dummy.

Information on the HIII–10C key exterior dimensions and weights for the major body sections are included in the drawing package, which is included in the docket for this notice.

Similar to the construction of adult dummies in the Hybrid III family, the 10-year-old dummy consists of an articulated, damped steel ''skeleton'' that is covered by foam and plastic simulating human flesh and skin. However, the lumbar spine is constructed of a butyl rubber cylinder with an adjusting bracket located between the lumbar spine and pelvis bone. This adjusting bracket allows for upper torso orientation adjustment of approximately 24 degrees relative to the lower torso to simulate a range of normal and ''slouched'' seating positions. Slouch is a critical design feature, because children not in booster seats tend to slouch to keep the underside of their knees from interfering with the front edge of a vehicle seat as their legs bend over the edge of the seat. As explained above, this slouched posture has the potential to result in abdominal and neck injuries from a vehicle's lap and shoulder belt in a crash. The slouched position would allow the HIII–10C to provide data on the interaction of a vehicle belt system and older children seated in this posture.

The specifications for the HIII–10C would consist of: (a) A drawing package containing all of the technical details of the dummy; (b) a parts list; and (c) a user manual containing instructions for inspection, assembly, disassembly, use, and adjustments of dummy components (PADI). These drawings and specifications would ensure that the dummies would be the same in their design, construction, and kinematics. In addition, three-dimensional engineering aids are available from the NHTSA website for complex dummy part dimensions. While these aids are not part of this specification, they can be used by the public for reference purposes. The performance calibration

[2] H.J. Mertz, *et al.*, ''The Hybrid III 10-Year-Old Dummy,'' #2001–22–0014, Proceedings, Stapp Car Crash Conference, Vol. 45, November 2001, The Stapp Association.

[3] FTSS manufactured the head, neck, upper extremities, and upper torso of the prototype. Denton manufactured the lower half of the dummy, including the pelvis and lower extremities. Subsequently, the manufacturers have exchanged drawings allowing each one to manufacture a complete dummy.

tests proposed in this NPRM would serve to assure that the HIII–10C responses are within the established biomechanical corridors and further assure the uniformity of dummy assembly, structural integrity, consistency of response and adequacy of instrumentation. As a result, the repeatability of the dummy's impact response would be ensured.

Drawings and specifications for the HIII–10C are available for examination in the NHTSA docket section. Copies of those materials and the user manual may also be obtained from Leet-Melbrook, Division of New RT, 18810 Woodfield Road, Gaithersburg, MD 20879, tel. (301) 670–0090.

A technical report and other materials describing the HIII–10C in detail have been placed in the docket for today's NPRM.

A. Biofidelic Consistency of the HIII 10-Year-Old Dummy With the Hybrid III 50th Percentile Component Responses

An important characteristic of a dummy for use as a test tool is how well it simulates a human undergoing impact, a property otherwise known as biofidelity. For adult sized dummies such as the Hybrid III 50th percentile male, the component responses can be compared directly to post-mortem human subject (PMHS) response data to assess biofidelity. Due to the scarcity of biomechanical data for children, response corridors for child dummies have to be constructed by scaling adult PMHS data, using geometric factors such as mass and length. Given the current lack of pediatric data, if it is accepted that the HIII 50th percentile male dummy has adequate biofidelity,[4] the biofidelity of the HIII–10C can be assessed by comparing the child dummy responses to response specification data (certification data) scaled from the adult dummy.

Following this approach, the SAE DFTG examined the response of the HIII–10C head, neck, thorax and knee and determined that prototype HIII–10C components displayed an acceptable level of biofidelity with respect to the scaled corridors.[5] Scaling relationships developed by Irwin and Mertz[6] were used by NHTSA to define the biomechanical response corridors of the HIII–10C as compared to the HIII 50th percentile male data. Following the International Standard Organization (ISO) TR 9790 biofidelity scaling procedure,[7] the head and knee of the dummy could be given a rating of 10, and the neck and thorax a rating of 5, indicating that no components have unacceptable biofidelity. This methodology yields an overall biofidelity assessment of ''excellent'' which is in agreement with the DFTG assessment.

The NHTSA Bio Rank System[8] was applied to HIII–10C dummy component peak responses from testing at VRTC[9] for the head, neck, thorax, and knees to quantify how well they fit within their respective certification corridors derived from scaling. The dummy's cumulative variance (DCV) was calculated as the absolute value of the difference between the mean dummy peak response and mean value from the scaled certification corridor for each individual measurement. The cadaver cumulative variance (CCV), normally the accumulated standard deviation of a sample of human data, was modified to be one-fourth of the tolerance presented in the scaled 50th certification corridor. This assumes that the certification corridor is the mean plus or minus two standard deviations:[10]

$$\frac{DCV}{CCV} = \frac{\left|m_{dummy} - m_{scaled50th}\right|}{s_{scaled50th}}$$

A DCV/CCV value of 2.0 or below indicates that particular HIII–10C component response is within two standard deviations of the HIII–50th scaled data. In other words, the next HIII–10C component can be considered to respond as much like the scaled data as a HIII–50th component would match the corresponding adult corridor. Table II summarizes the DCV/CCV values for each component measurement.

TABLE II.—DCV/CCV VALUES FOR HIII–10C COMPONENT RESPONSES IN VRTC TESTS

Component	Dummy data (N=2)		Scaled corridor		DCV/CCV
	Mean	Std dev	Mean	Std dev	
Head:					
Resultant (g)	277	6	267.5	13.75	0.69
Neck Flexion:					
Moment (Nm)	54.8	1.9	58	3.5	0.91
Rotation (deg)	81.7	2	81	3.5	0.20
Neck Extension:					
Moment (Nm)	41.5	1.9	41	3	0.17
Rotation (deg)	107.7	2.7	106.3	3.7	0.36
Thorax:					
Deflection (mm)	45.8	1	43	2	1.40
Force (N)	2202	107	2080	25	0.98
Hysteresis (%)	74.2	1.5	75	5	0.40
Knee:					
Force (N)	2819	106	2850	145	0.21

As seen in Table II, all nine of the HIII–10C component responses based on two dummies had DCV/CCV values below 2.0 (in fact, all but the thorax had values less than 1.0), indicating that each response is within 2 standard

[4] Foster, *et al.* (1977). ''Hybrid III—A Biomechanically-Based Crash Test Dummy,'' Proc. Twenty-First Stapp Car Crash Conference, SAE 770938. Society of Automotive Engineers, Warrendale, PA.

[5] Mertz, *et al.*, (2001). ''The Hybrid III 10-Year-Old Dummy,'' Proc. Forty-Fifth Stapp Car Crash Conference, Paper 2001–22–0014.

[6] Irwin and Mertz (1997), ''Biomechanical Bases for the CRABI and Hybrid III Child Dummies,'' Proceedings, 41st Stapp Car Crash Conference, SAE 973317, SAE, Warrendale, PA.

[7] Scherer *et al.*, Proceedings, 42nd Stapp Car Crash Conference, SAE 983151, SAE, Warrendale, PA.

[8] Rhule, *et al.*, (2002). ''Development of a New Biofidelity Ranking System for Anthropomorphic Test Devices,'' Proc. 46th Stapp Car Crash Conference, Paper 2002–22–0024.

[9] Stammen, J. ''Technical Evaluation of the Hybrid III Ten Year Old Dummy (HIII–10C),'' September 2004.

[10] Rhule, ibid.

deviations of the mean of the HIII–10C scaled corridors. As noted earlier, there is no human pediatric data for direct HIII–10C dummy biofidelity evaluation. However, because the HIII–10C components are consistent with the HIII–50th components and Foster (*id.*) showed that the HIII–50th components were consistent with human component response data, NHTSA believes that the components of this dummy have acceptable biofidelity.[11]

B. Repeatability and Reproducibility

A dummy's repeatability[12] and reproducibility[13] are typically based on the performance of the most critical body segments, as components and as a complete dummy system. A dummy and its components must respond within boundaries that relate to biomechanical corridors. In the tests for repeatability and reproducibility, impact input as well as the test equipment are carefully controlled to minimize external effects on a dummy's response. Component tests are typically better controlled and thus produce more reliable estimates of the dummy's repeatability and reproducibility than is possible in sled and vehicle tests. Component tests identify whether a component will respond properly in impact tests. Sled tests, on the other hand, offer a method of efficiently evaluating a dummy as a complete system in an environment much like a vehicle test. Sled tests establish the consistency of the dummy's kinematics, its impact response as an assembly, and the integrity of a dummy's structure and instrumentation under controlled and crash-representative test conditions.

The repeatability and reproducibility of dummy responses are assessed by coefficient of variation (cv) values of impact responses (coefficient of variation = standard deviation divided by the mean). This approach was introduced for automotive dummy assessment in 1974 at the Third International Conference of Occupant Protection (154 FR 369, August 9, 1975) as a means of evaluating dummy repeatability. The repeatability assessment specifies that the dummy's response must fall within specified performance limits and that it does not exceed a CV value of 10% in repeated identical impact exposures. Reproducibility is a statistical assessment of compiled responses of multiple dummies in a duplicated impact environment. Multiple dummies produce a wider dispersion of response measurement than in testing a single dummy for repeatability. Accordingly, a CV of 15% for reproducibility is being proposed as a practical limit for maximum allowable variance in repeated tests of multiple dummies, as long as any single dummy within that set conforms to the 10% repeatability requirement.

C. Component Tests

The critical body segments were evaluated by conducting certification tests on the head, neck, thorax, torso, and knee. These tests were conducted in accordance with the procedure specified in the most recent version of the DFTG's user manual developed for the HIII–10C. Components from a dummy manufactured by FTSS and those from a dummy manufactured by Denton were tested prior to and after a series of sled tests. The CV values used to assess the quality of repeatability and reproducibility are provided in Table III.

TABLE III.—DUMMY RATING SCORES FOR REPEATABILITY AND REPRODUCIBILITY

Repeatability % CV	Reproducibility % CV	Rating
0–5	0–6	Excellent.
>5–8	>6–11	Good.
>8–10	>11–15	Marginal.
>10	>15	Poor.

For each of the dummies, the head, neck, knee and thorax all responded with a rating of excellent in the repeatability and the reproducibility evaluations.

The repeatability values from the torso evaluation were acceptable with CV values below 10 percent, except that data in one channel from the reproducibility evaluation narrowly missed an ''acceptable'' value. Torso flexion tests were conducted on both dummies before and after the sled test series per the procedure defined in CFR Part 572, Subpart O (Hybrid III 5th Percentile Female Dummy), except that the resistance force was measured at 35 degrees of torso flexion instead of 45 degrees. The smaller size of the HIII–10C and the pelvis angle required for slouching prohibited the test dummy from achieving an angle of 45 degrees. The reproducibility value for the resistance force at 35 degrees of torso flexion was in the excellent range (CV=4.5%), and the CV for the initial mean angle value of the torso was in the acceptable range (CV=14.2%). However, the return angle of the torso after the flexion test produced a CV value of 16.7 percent, which is above the 15% limit for acceptability. Inasmuch as the torso return angle average of 5.67 degrees is well below the maximum allowable 8 degree limit, the slightly higher repeatability CV value than the maximum allowable is of little concern in this case. Evidence of a specific return angle is indicative of the torso mid-section having certain elastic, more human-like properties. A return within the 8 degree limit indicates that the forces of restitution are intact. No return, or an indefinite return, would indicate a substantial change within the internal mechanisms of the mid-torso structure, such as failure of the lumbar spine, abdomen, or a substantial shift between interfacing body segments within the abdominal cavity. Although the dummies' responses were just outside the acceptable range for repeatability, each response demonstrated elastic properties and no structural failures.

D. Sled tests

To assess the repeatability and reproducibility of the HIII–10C as a complete dummy, the agency conducted two sets of FMVSS No. 213 type sled tests with the dummy placed in a booster seat and with test environment variables minimized. A more repeatable test environment was constructed in the form of a rigid bench seat, as opposed to a cushioned seat, to minimize seat cushion related variables and facilitate consistent dummy positioning

[11] Foster, ibid.

[12] Repeatability is defined as a similarity of responses of a single dummy measured under identical repeated test conditions.

[13] Reproducibility is defined as response similarity between different dummies of the same design under identical test conditions.

throughout the test series. The seat was built to permit vertical adjustment of its base to either allow proper belt restraint placement on the elevated dummy or to accommodate a booster seat to the same sitting height on the lowered base. The seat base was carpeted (¼″ thick, 0.5 lb/square foot weight carpet) to prevent excessive sliding of the booster seat. Again, repeatability and reproducibility of the dummies in systems tests are assessed using the ISO developed CV scale discussed above.

In the first set of sled tests, the two dummies were set-up on the existing rigid bench seat specified in FMVSS No. 213. The features of the bench seat were not modified as specified by a June 24, 2003 final rule amending FMVSS No. 213 (68 FR 37620; Docket No. NHTSA–2003–15351).[14] Because of the possibility of the rigid seat causing the dummies to absorb more of the impact energy, a softer 20 g, 27 mph pulse was applied in the two dummies test series. This pulse represents 19 percent reduced energy from the FMVSS No. 213 sled pulse. A good belt fit on the dummies' shoulders and pelvis was achieved by raising the seat to the equivalent height of a booster seat cushion. None of the dummy responses from this series of tests resulted in CV values that were in the unacceptable range, which demonstrates that the HIII–10C has good repeatability and reproducibility as a complete system.

Test data from the repeatability and reproducibility tests in the reduced energy environment are shown in Table IV, below. Data for repeatability display averages of five responses for each dummy, their respective standard deviations, and the corresponding CV values. The data for reproducibility combine the measurements of both dummies and provide averages, standard deviations, and CV values for each data channel. The responses on the whole are reasonably similar between the two dummies. Table V displays the distribution of the measured CV values of the major body segments from Table IV that fell into each of the repeatability and reproducibility rating categories listed in Table III. The only channel that failed to meet the ''good'' or ''excellent'' categories was the upper neck X force in Dummy #1, which received an ''acceptable'' rating.

TABLE IV.—RESPONSE ANALYSIS OF THE HIII–10C IN SIMULATED BOOSTER HEIGHT

Channel	Repeatability				Reproducibility	
	Dummy #1 (n=5)		Dummy #2 (n=5)		Both test dummies (n=10)	
	AVG	CV (percent)	AVG	CV (percent)	AVG	CV (percent)
Head X (g)	39	5.0	37	2.6	38	4.2
Head Z (g)	47	7.1	40	4.0	44	10.3
Head Resultant (g)	51	7.7	43	3.9	47	10.1
HIC 36	355	7.1	317	5.2	336	8.5
Upper Neck X Force (N)	820	9.6	695	2.2	758	11.2
Upper Neck Z Force (N)	1728	5.0	1525	4.5	1627	8.0
Upper Neck Y Moment (N-m)	34	4.1	38	3.1	36	7.1
Chest X (g)	40	4.7	39	2.4	40	4.1
Chest Z (g)	9	6.0	10	8.0	10	6.9
Chest Resultant (g)	41	4.4	39	1.6	40	3.7
Chest Clip (g)	40	3.2	38	2.2	39	3.5
Chest Deflection (mm)	31	5.4	26	5.4	28	10.6
Pelvis Resultant (g)	39	5.0	39	1.8	39	4.0

TABLE V.—DISTRIBUTION OF THE MEASURED CV VALUES OF THE MAJOR BODY SEGMENTS BY THE REPEATABILITY AND REPRODUCIBILITY RATING SCALES BY FREQUENCY COUNT

[Ref. Table IV, *supra*]

Rating	Repeatability		Reproducibility both dummies
	Test dummy #1	Test dummy #2	
Excellent	7	11	5
Good	5	2	7
Acceptable	1	0	1
Unacceptable	0	0	0
% Acceptable	100	100	100

The second set of sled tests to evaluate repeatability and reproducibility was conducted with three HIII–10C dummies. The third dummy was constructed with the upper half manufactured by Denton ATD and the lower half manufactured by FTSS (combination dummy). Testing of the combination dummy was to determine if the drawing specifications would produce interchangeable parts irrespective of the manufacturer, and if a combination test dummy would provide the same repeatability, reproducibility, and durability as a test dummy manufactured by a single company. The three dummies were seated side by side at booster seat height

[14] The June 24, 2003 final rule increased the test bench's seat cushion angle from 8 degrees off horizontal to 15 degrees; increased the test bench's seat back angle from 15 degrees off vertical to 22 degrees; increased the spacing between the anchors of the lap belt from 222 mm to 400 mm in the center seating position and from 356 mm to 472 mm in the outboard seating positions; and specified a rigid seat back as opposed to a flexible back.

on the updated FMVSS No. 213 bench seat specified in the June 2003 final rule. (The bench seat was slightly modified to provide a lap/shoulder belt for the center seating position.) Testing all three dummies side-by-side permitted a comparison of the test dummies' kinematics in the same crash environment. As in the first set of tests, the seat foam was removed and replaced by carpeting material to minimize possible bench seat interaction effects on the dummies' responses. The three dummies were set up in identical upright postures and restrained by three-point belts representative of vehicle lap and shoulder belts. The full FMVSS No. 213 sled pulse (24 g and 30 mph) was used in these tests. Four repeat tests with the three dummies yielded a total of 12 sets of data. Results are shown in Table VI and summarized in Table VII by how well the dummies fit within the repeatability and reproducibility rating categories.

TABLE VI.—SUMMARY OF SELECTED THREE HIII–10C DUMMIES REPEATABILITY AND REPRODUCIBILITY TEST RESPONSES

[Full FMVSS No. 213 Sled Pulse]

Channel	Dummy # 1 (n=4)		Dummy #2 (n=4)		Combination test dummy (n=4)		All test dummies (n=12)	
	AVG	CV (percent)	AVG	CV (percent)	AVG	CV (percent)	AVG	CV (percent)
Head X (g)	34	10.7	37	9.2	29	.....	33	13.9
Head Z (g)	55	3.6	48	2.0	49	2.0	51	6.8
Head Resultant (g)	60	3.0	51	1.2	53	1.9	55	7.4
HIC 36	545	4.6	464	3.3	483	5.8	498	8.4
Upper Neck X Force (N)	841	6.5	885	8.3	720	5.6	815	11.0
Upper Neck Z Force (N)	1923	4.0	1713	3.8	1757	1.9	1797	6.1
Upper Neck Y Moment (N-m)	41	7.0	38	5.3	39	3.3	39	6.4
Chest X (g)	37	5.1	37	4.5	38	2.9	37	4.0
Chest Z (g)	16	3.0	14	8.0	16	10.2	15	9.5
Chest Resultant (g) 3	38	5.1	39	3.9	40	3.6	39	4.8
Chest Clip (g)	32	7.0	31	6.9	33	6.3	32	6.6
Chest Deflection (mm)	37	4.1	38	3.8	39	4.4	38	4.6
Pelvis Resultant (g)	41	4.3	48	3.4	47	4.2	45	7.5

TABLE VII.—DISTRIBUTION OF THE MEASURED CV VALUES OF THE MAJOR BODY SEGMENTS BY THE REPEATABILITY AND REPRODUCIBILITY RATING SCALE BY FREQUENCY COUNT

[Ref. Table VI, *supra*]

Rating	Repeatability			Reproducibility
	Test dummy #1	Test dummy #2	Combination test dummy	Dummies
Excellent	7	8	8	3
Good	5	3	3	9
Acceptable	0	2	2	1
Unacceptable	1	0	0	0
% Acceptable	93	100	100	100

Test dummy #2 and the combination of test dummy responses demonstrated 100 percent acceptability for repeatability and reproducibility. Test dummy #1 demonstrated approximately 93 percent acceptability for repeatability and 100 percent acceptability for reproducibility. We believe the 93 percent value can be accepted as repeatable. Test dummy #1 was prevented from achieving 100 percent acceptability by a head ''X'' acceleration CV rating of 10.7 percent, which is only 0.7 percent above the acceptability limit. The dummy still demonstrated an acceptable repeatability CV value for the HIC $_{36}$ measurement.

Based on the above, the agency tentatively concludes that the HIII–10C provides sufficient repeatability and reproducibility at both the component level and the system level.

V. The Dummy's Response Sensitivity and Structural Durability

A variety of sled tests were conducted to substantiate the functionality of the HIII–10C dummy's sensitivity in differentiating the effects of substantially different but repeatable restraint configurations in several environments. Durability of the dummy's structure was also assessed in each of these test environments. These sled tests evaluated the dummy's sensitivity to the following variables:

- Booster seat design
- Posture
- Three-point belt application
- Applied pulse
- Vehicle seat
- Airbag interaction.

As discussed below, based on these tests, we tentatively conclude that the HIII–10C is capable of differentiating between restraint systems and incremental improvements in restraint configurations. It also displayed sufficient durability in all environments.

A. Sensitivity of Responses to Booster Seat Design

Tests were conducted with both dummies in the FMVSS No. 213 configuration with two different makes of booster seats, the Graco Grand Cargo and the Century Breverra. These booster seats were chosen because they appeared similar in design and appeared to result in similar dummy postures in the pretest set-up.

In sled tests, the dummies in each type of booster seat showed similar torso kinematics, except for some outboard rotation of the legs in the Century mode. Test results indicate that both HIII–10C dummies were capable of similar differentiation between booster seat models through response measurements. In the Graco Grand Cargo booster seat, both dummies exhibited very similar impact responses. In the Century Breverra seat, similarities in impact responses between the dummies were somewhat less strong. It appears that relatively good consistency of the response by both dummies in the Graco Grand Cargo booster seat and somewhat less consistency by the same dummies in the Century Breverra seat were due to differences in the containment characteristics of the two booster seats during the test rather than differences between the dummies themselves.

B. Sensitivity of Response to Dummy's Posture

As explained previously, the HIII–10C dummy is capable of being seated in a ''slouched'' position, similar to adolescent children sitting in adult seats. The slouched position permits the lower portion of the dummy to be brought forward so that the knees can bend and orient the lower legs downwards at the front of a seat. This forward positioning of the legs puts the slouched dummy's upper torso in a reclined orientation approximately 12 degrees from the normal upright torso orientation.[15] In testing, the slouched dummies ''submarined'' under the lap belt, demonstrating that the HIII–10C is suitable for detecting and assessing submarining tendencies within belt restraint-seat systems that are not built to prevent such an event.

C. Sensitivity of Response of the Dummy in Three-Point Belt Applications

This series of tests was to determine if the dummy could differentiate between properly and improperly used shoulder belts when a booster seat is not utilized, and also to evaluate impact responses between dummies in three-point belt systems and booster seats. The tests compared the effects of belt placement on the impact kinematics and response of the HIII–10C dummy. Each dummy was seated on the FMVSS No. 213 type bench seat in two repeated frontal impact tests. To represent incorrect three-point belt application (misuse), adult belt restraints were applied on the upright-seated HIII–10C torso in the normal manner, except that the shoulder belt, instead of being routed over the shoulder, was routed under the seated dummy's arm.

Each dummy placed in the misuse configuration exhibited distinctly different kinematics from when it was properly restrained. The upper torso, while pitching forward, forced the shoulder belt to slide down the torso towards the abdomen to become like a lap belt. At extreme flexion, the upper torso jack-knifed over the belt restraint far enough to allow the head to impact the knees. However, during the upper torso jack-knifing motion, the head movement relative to the upper torso was relatively small.

Comparison of test data indicate that the HIII–10C dummy is suitable for detecting and assessing misuse of the shoulder belt on the child's upper torso. Misalignment of the shoulder belt produces not only a very large chest deflection, but also can damage the chest deflection measuring system. However, since compliance test conditions do not typically include belt misuse evaluations, mechanical failure of the deflection measuring system in this test set-up is of little concern. Nonetheless, the deflection measuring system would be able to detect whether a shoulder slid off the dummy's shoulder.

Dummies restrained in booster seats indicate fairly sizable impact response reductions over dummies restrained in three-point belt systems, except for relatively minor differences in chest deflections. Chest deflections of dummies in booster seats were on the average about 5 percent higher than in three-point belt systems at comparable sled impact speeds.

D. Sensitivity of Dummy Response and Durability in NCAP Pulse and Different Restraint Systems

Subsequent to completion of the FMVSS No. 213 type tests, the FTSS and Denton dummies were evaluated in a vehicle environment at NCAP speed on the HYGE sled. The objectives were: (1) To evaluate the dummy's durability under severe loading conditions; (2) to compare the dummy's responses in booster seat versus non-booster in normal seating configurations, including the slouch posture; and (3) to measure differences in kinematic excursions of the head and knees in the different test configurations. This sled was set up for this test series to represent the vehicle environment of a 2000 Ford Expedition XLT. The sled pulse was based on the NCAP 35 mph vehicle to barrier crash acceleration profile.

For the dummies in booster seats and in normal upright and slouched set-ups, the belt was positioned correctly by adjusting the D-ring position. A D-ring is the anchorage for a shoulder belt and its position can be adjusted to enhance the correctness of shoulder belt fit. For the slouch tests, the D-ring was kept in the same position as for the normal upright posture, resulting in incorrect belt fit on the dummy (shoulder belt medial to the clavicle, and lap belt top surface superior to the pelvis lip). As expected, the dummies seated in booster seats yielded significantly lower response levels than three-point belted dummies in upright and in slouched postures.[16]

While no durability problems were encountered in component certification and FMVSS No. 213 type sled tests, one type of problem emerged during the NCAP test series. Some ribs from both dummies experienced delamination of the damping material. Upon investigation, this was found to be an anomalous initial manufacturing problem, because replacement ribsets used in subsequent dummy tests survived well over 30 relatively severe sled impact exposures and numerous certification tests without indication of any structural or functional failures. Accordingly, NHTSA believes that the ribs raise neither fatigue nor durability issues.

VI. Dummy Performance in OOP Environment

The HIII–10C was evaluated for its usefulness and robustness in the static out-of-position (OOP) airbag compliance test of FMVSS No. 208, *Occupant crash protection.* Under the requirements of FMVSS No. 208, vehicle manufacturers may comply with an OOP air bag requirement which, in part, tests the interaction of an air bag and a child occupant under two ''worst-case'' scenarios. In those, the air bag is deployed with the child's head on the vehicle's instrument panel (head-to-IP), and the air bag is deployed with the child's chest on the instrument panel (chest-to-IP). In testing the HIII–10C

[15] Normal upright orientation means the upper torso midsagittal backline is essentially parallel to the seat back incline plan.

[16] While no durability problems were encountered in component certification and FMVSS No. 213 type sled tests, one type of a problem emerged during the NCAP test series. Some ribs from both dummies experienced delamination of the damping material. Upon investigation, we preliminarily determined that this problem is most likely related to either the manufacturing process or adhesive selection, rather than a flaw in design. This was confirmed in subsequent testing in which new ribsets of the same design mounted in the two dummies survived well over 30 sled tests and numerous certification tests without indication of any structural or functional failures. Accordingly, the agency believes that the ribs pose neither fatigue nor durability issues.

under the OOP conditions, three objectives were of primary interest:

- Evaluate the neck's durability;
- Establish the capacity and performance of the head/neck and thorax instrumentation;
- Determine ease of dummy positioning for OOP testing.

1. Test Set-Up

In the head-to-IP tests, the neck angle was set at 16 degrees flexion relative to the perpendicular to the neck base mounting plateau so that the chin of the dummy was level with the centerline of the airbag flap. For the chest-to-IP position, the neck angle was changed to 0 degrees so that the head was not touching the windshield. The seat back was reclined fully. The doorsill, striker face, and windshield were used as measurement references to position the dummy.

2. General Observations

Video analysis of the dummies' kinematics exhibited minimal torso twisting around the superior-inferior axis during the forward and backward translation while in contact with the airbag. Chalk transfer to the airbag, in addition to video analysis, did not show the airbag entering the cavity between the chin and neck.

3. Neck Durability

The neck structure exhibited no visible damage during the OOP tests. Dummy calibration tests following the OOP test series indicated that both FTSS test dummy neck and Denton ATD test dummy neck continued to pass the calibration response requirement in both flexion and extension. Except for minor abrasions and mini-tears to the chin area of the head skin due to airbag membrane interaction, no other failures were encountered.

4. Response Differences Due to Dummy Makes

With the exception of HIC values, the average response values for each dummy appear to be consistent with each another. The FTSS test dummy experienced HIC values of 91 and 169 for the head-to-IP and chest-to-IP configurations, respectively. The Denton test dummy experienced HIC values of 179 and 589 for the head-to-IP and chest-to-IP configurations, respectively. However, the small number of tests prevents drawing definitive conclusions on differences between the two dummies.

5. Dummy Positioning

The IP positions for the Hybrid III 6-year-old (HIII–6C) found in S24.4 of FMVSS No. 208 were used as reference. One modification to the procedure was required to better position the HIII–10C. In the chest IP position, the lower legs below the femur were removed to allow mid-chest contact with the IP without wedging the head against the windshield.

VI. Proposed Calibration Tests

The agency proposes the following calibration test specifications and procedures for the HIII–10C dummy. Performance certification specifications would test response requirements for components of the dummy (the head; neck; thorax; and knees), and a semi-static flexion test of the upper torso with respect to the lower torso of a fully assembled seated dummy.

A. Head Drop Specification

Since the HIII–10C head is the same as the Hybrid III small female head, we are proposing the same head drop specification for the HIII–10C as that of the 49 CFR Part 572, Subpart O, Hybrid III 5th Percentile Female Test Dummy, Alpha Version. Under Subpart O the head is dropped from a 376 mm height targeting the forehead to impact at the midsagittal plane a flat, rigid surface. When the dummy head is dropped in accordance with the above test, the agency proposes the following certification specifications:

1. The peak resultant acceleration must not be less than 250 g and not more than 300 g;
2. The resultant acceleration vs. time history curve shall be unimodal; oscillations occurring after the main pulse must be less than 10 percent of the peak resultant acceleration; and
3. The lateral acceleration shall not exceed 15 g (zero to peak).

B. Neck Pendulum Test

The proposed test procedure for the neck pendulum test corresponds to the calibration test specified for the Hybrid III series of test dummies. Under the proposed procedure the head-neck assembly would be mounted on the pendulum described in Figure 22 of 49 CFR part 572 so that the leading edge of the lower neck bracket coincides with the leading edge of the pendulum. The pendulum would then be released from a height to achieve an impact velocity of 6.1 ± 0.12 m/s (20.0 ± 0.4 ft/s) for flexion tests and 5.03 ± 0.12 m/s (16.50 ± 0.4. ft/s) for extension tests. The pendulum would then be stopped from the initial velocity with an acceleration vs. time pulse that meets the velocity change as specified below. When the HIII–10C neck is tested in accordance with the proposed test procedure, the following specifications would have to be met:

1. Flexion

(a) The plane D (*i.e.*, an imaginary plane perpendicular to the skull cap/skull interface) shall rotate upon arrest of the pendulum motion in the direction of pre-impact flight with respect to the pendulum's longitudinal centerline between 74 and 88 degrees.

(b) During the time interval while rotation is within the specified corridor, the peak moment about the occipital condyles must not be less than 50 N-m (36.9 ft-lbf) and not more than 62 N-m (45.7 ft-lbf).

(c) The positive moment shall decay for the first time to 10 N-m (7.4 ft-lbf) between 85 ms and 105 ms after time zero.

2. Extension

(a) The plane D (*i.e.*, an imaginary plane perpendicular to the skull cap/skull interface) shall rotate upon arrest of the pendulum motion in the direction of pre-impact flight with respect to the pendulum's longitudinal centerline between 99 and 114 degrees.

(b) During the time interval while rotation is within the specified corridor, the peak moment about the occipital condyles must not be less than −35 N-m (−25.8 ft-lbf) and not more than −47 N-m (−34.7 ft-lbf).

(c) The positive moment shall decay for the first time to −10 N-m (−7.4 ft-lbf) between 100 ms and 120 ms after time zero.

C. Knee impact

This calibration test would be performed on a knee assembly, which consists of the lower upper leg assembly, the knee and the distal portion of the femur including the femur load transducer or its structural replacement. When impacted by the test pendulum at 2.1 m/s, the peak knee response force would be required to be between 2560 N and 3140 N.

D. Thorax impact

The thorax impact calibration test would be performed on a fully assembled, seated dummy. The dummy set-up and impact procedures would be similar to that in 59 CFR Part 572, Subpart O. Under the proposed calibration requirement, when the test probe impacts the test dummy at the chest midsagittal plane below the number three rib, the following specifications must be met:

(1) The chest in pendulum impact at 6.0 m/s develops a resistance force between 1830 N and 2330 N at peak sternum deflection between 40.5 mm and 48.5 mm, and

(2) The force deflection plot is to have an internal hysteresis between the loading and unloading portions of the curve between 69 percent and 85 percent.

E. Torso flexion

As with the thorax impact calibration test, the torso flexion calibration test would be performed on a fully assembled, seated dummy. The test procedure would determine the combined stiffness of the molded lumbar assembly, abdominal insert, and chest flesh assembly resisting articulation between the upper torso assembly and the lower torso assembly. The resistance to flexion of the upper torso relative the lower torso at 35 deg. of upper torso rotation would be required to be between 190 N and 240 N. Upon removal of the force, the torso would be required to return to within 8 degrees of it initial position.

VII. Benefits and Costs

Direct safety benefits to the public by the issuance of this regulation are not quantifiable. However, the availability of this dummy in a regulated format will have indirect safety benefits since it will provide a more suitable, stabilized, and objective test tool to the safety community for use in research and development of improved after market and/or integrated restraint systems. In addition, incorporation of the test dummy will permit CRS manufacturers to begin offering new CRS systems commercially with certification that they have been proof tested with an appropriately used and certified test dummy.

The cost of an uninstrumented HIII–10C dummy is approximately $32,700. The cost for a minimum set of instruments for compliance type testing, which may include 3 accelerometers each for the head, thorax, and the pelvis, a chest deflection potentiometer, a force and moment transducer for the upper neck and the lumbar spine, and single axis force transducer for each femur would add approximately $46,200. A full set of instrumentation as shown below would add approximately $71,900 to the cost of an uninstrumented dummy.

TABLE VIII.—INSTRUMENTATION AVAILABLE FOR THE HIII–10C DUMMY

Location	Measurement	Number of channels
Head C.G.*	Acceleration	3
Head Tilt Sensor	Acceleration	1 (optional)
Upper Neck Load Cell*	Forces & Moments	6
Lower Neck Load Cell	Forces & Moments	6 (optional)
Thorax C.G.*	Acceleration	3
Shoulder*	Force	2
Sternum*	Displacement	1
Sternum	Displacement (IR–TRACC)	2 (optional)
Sternum	Acceleration	2 (optional)
Spine	Acceleration	2 (optional)
Lumbar Spine*	Forces and Moments	3
Pelvis C.G.*	Acceleration	3
A–P Iliac Spine*	Forces	4
Femur*	Force	1 each rt&lt (optional)
Femur	Forces and Moments	6 each rt&lt (optional)
Mid-shaft Tibia	Force	1 each rt&lt (optional)
Mid-shaft Tibia	Forces and Moments	6 each rt&lt (optional)

*Instruments intended to be used in NHTSA FMVSS No. 213 type testing.

IX. Public Participation

How Do I Prepare and Submit Comments?

Your comments must be written and in English. To ensure that your comments are correctly filed in the Docket, please include the docket number of this document in your comments.

Your comments must not be more than 15 pages long. (49 CFR 553.21). NHTSA established this limit to encourage you to write your primary comments in a concise fashion. However, you may attach necessary additional documents to your comments. There is no limit on the length of the attachments.

Please submit two copies of your comments, including the attachments, to Docket Management at the address given above under **ADDRESSES**.

You may also submit your comments to the docket electronically by logging onto the Dockets Management System Web site at *http://dms.dot.gov.* Click on ''Help & Information'' or ''Help/Info'' to obtain instructions for filing the document electronically.

How Can I Be Sure That My Comments Were Received?

If you wish Docket Management to notify you upon its receipt of your comments, enclose a self-addressed, stamped postcard in the envelope containing your comments. Upon receiving your comments, Docket Management will return the postcard by mail.

How Do I Submit Confidential Business Information?

If you wish to submit any information under a claim of confidentiality, you should submit three copies of your complete submission, including the information you claim to be confidential business information, to the Chief Counsel, NHTSA, at the address given above under **FOR FURTHER INFORMATION CONTACT**. In addition, you should submit two copies, from which you have deleted the claimed confidential business information, to Docket Management at the address given above under **ADDRESSES**. When you send a comment containing information claimed to be confidential business information, you should include a cover letter setting forth the information specified in our confidential business information regulation. (49 CFR Part 512.)

Will the Agency Consider Late Comments?

NHTSA will consider all comments that Docket Management receives before the close of business on the comment

closing date indicated above under **DATES**. To the extent possible, the agency will also consider comments that Docket Management receives after that date. If Docket Management receives a comment too late for the agency to consider it in developing a final rule (assuming that one is issued), the agency will consider that comment as an informal suggestion for future rulemaking action.

How Can I Read the Comments Submitted By Other People?

You may read the comments received by Docket Management at the address given above under **ADDRESSES**. The hours of the Docket are indicated above in the same location.

You may also see the comments on the Internet. To read the comments on the Internet, take the following steps:

1. Go to the Docket Management System (DMS) Web page of the Department of Transportation (*http://dms.dot.gov/).*

2. On that page, click on ''search.''

3. On the next page (*http://dms.dot.gov/search/),* type in the four-digit docket number shown at the beginning of this document. Example: If the docket number were ''NHTSA–1998–1234,'' you would type ''1234.'' After typing the docket number, click on ''search.''

4. On the next page, which contains docket summary information for the docket you selected, click on the desired comments. You may download the comments. Although the comments are imaged documents, instead of word processing documents, the ''pdf'' versions of the documents are word searchable.

Please note that even after the comment closing date, NHTSA will continue to file relevant information in the Docket as it becomes available. Further, some people may submit late comments. Accordingly, the agency recommends that you periodically check the Docket for new material.

Anyone is able to search the electronic form of all comments received into any of our dockets by the name of the individual submitting the comment (or signing the comment, if submitted on behalf of an association, business, labor union, etc.). You may review DOT's complete Privacy Act Statement in the **Federal Register** published on April 11, 2000 (Volume 65, Number 70; Pages 19477–78) or you may visit *http://dms.dot.gov.*

X. Rulemaking Analyses and Notices

Executive Order 12866 and DOT Regulatory Policies and Procedures

Executive Order 12866, ''Regulatory Planning and Review'' (58 FR 51735, October 4, 1993), provides for making determinations whether a regulatory action is ''significant'' and therefore subject to Office of Management and Budget (OMB) review and to the requirements of the Executive Order. This rulemaking action was not considered a significant regulatory action under Executive Order 12866. This rulemaking action was also determined not to be significant under the Department of Transportation's (DOT's) regulatory policies and procedures (44 FR 11034, February 26, 1979). The cost of an uninstrumented HIII–10C is approximately $32,700. Instrumentation would add approximately $46,200 for minimum requirements and approximately $71,900 for maximum instrumentation to the cost of the dummy.

This document proposes to amend 49 CFR Part 572 by adding design and performance specifications for a test dummy representative of a ten-year-old child that the agency may use in research and in compliance tests of the Federal child restraint system safety standards. If this proposed Part 572 rule becomes final, it would not impose any requirements on anyone. Businesses would be affected only if they choose to manufacture or test with the dummy. Because the economic impacts of this proposal are minimal, no further regulatory evaluation is necessary.

Regulatory Flexibility Act

Pursuant to the Regulatory Flexibility Act (5 U.S.C. 601 *et seq.*, as amended by the Small Business Regulatory Enforcement Fairness Act (SBREFA) of 1996), whenever an agency is required to publish a proposed or final rule, it must prepare and make available for public comment a regulatory flexibility analysis that describes the effect of the rule on small entities (*i.e.*, small businesses, small organizations, and small governmental jurisdictions), unless the head of the agency certifies the rule will not have a significant economic impact on a substantial number of small entities. The Small Business Administration's regulations at 13 CFR Part 121 define a small business, in part, as a business entity ''which operates primarily within the United States.'' (13 CFR 121.105(a)).

We have considered the effects of this rulemaking under the Regulatory Flexibility Act. I hereby certify that the proposed rulemaking action would not have a significant economic impact on a substantial number of small entities. This action would not have a significant economic impact on a substantial number of small entities because the addition of the test dummy to Part 572 would not impose any requirements on anyone. NHTSA would not require anyone to manufacture the dummy or to test motor vehicles or motor vehicle equipment with it.

National Environmental Policy Act

NHTSA has analyzed this proposal for the purposes of the National Environmental Policy Act and determined that it will not have any significant impact on the quality of the human environment.

Executive Order 13045

Executive Order 13045 (62 FR 19885, April 23, 1997) applies to any rule that: (1) is determined to be ''economically significant'' as defined under E.O. 12866, and (2) concerns an environmental, health, or safety risk that NHTSA has reason to believe may have a disproportionate effect on children. If the regulatory action meets both criteria, we must evaluate the environmental health or safety effects of the planned rule on children, and explain why the planned regulation is preferable to other potentially effective and reasonably feasible alternatives considered by us.

This proposed rule is not subject to the Executive Order because it is not economically significant as defined in E.O. 12866.

Executive Order 13132 (Federalism)

Executive Order 13132 requires agencies to develop an accountable process to ensure ''meaningful and timely input by State and local officials in the development of regulatory policies that have federalism implications.'' ''Policies that have federalism implications'' is defined in the Executive Order to include regulations that have ''substantial direct effects on the States, on the relationship between the national government and the States, or on the distribution of power and responsibilities among the various levels of government.''

NHTSA has analyzed this proposed amendment in accordance with the principles and criteria set forth in Executive Order 13132. The agency has determined that this proposal does not have sufficient federalism implications to warrant consultation and the preparation of a Federalism Assessment.

Civil Justice Reform

This proposed rule would not have any retroactive effect. Under 49 U.S.C.

30103, whenever a Federal motor vehicle safety standard is in effect, a State may not adopt or maintain a safety standard applicable to the same aspect of performance which is not identical to the Federal standard, except to the extent that the state requirement imposes a higher level of performance and applies only to vehicles procured for the State's use. 49 U.S.C. 30161 sets forth a procedure for judicial review of final rules establishing, amending, or revoking Federal motor vehicle safety standards. That section does not require submission of a petition for reconsideration or other administrative proceedings before parties may file suit in court.

Paperwork Reduction Act

Under the Paperwork Reduction Act of 1995, a person is not required to respond to a collection of information by a Federal agency unless the collection displays a valid control number from the Office of Management and Budget (OMB). This proposed rule would not have any requirements that are considered to be information collection requirements as defined by the OMB in 5 CFR Part 1320.

National Technology Transfer and Advancement Act

Section 12(d) of the National Technology Transfer and Advancement Act of 1995 (NTTAA), Public Law 104–113, section 12(d) (15 U.S.C. 272) directs NHTSA to use voluntary consensus standards in its regulatory activities unless doing so would be inconsistent with applicable law or otherwise impractical. Voluntary consensus standards are technical standards (*e.g.*, materials specifications, test methods, sampling procedures, and business practices) that are developed or adopted by voluntary consensus standards bodies. The NTTAA directs NHTSA to provide Congress, through OMB, explanations when the agency decides not to use available and applicable voluntary consensus standards. The proposed test dummy and certification requirements have been based on the work of the SAE DFTG. Differences between the DFTG recommendations and this proposal are minor and are based on additional research performed by the agency.

Unfunded Mandates Reform Act

Section 202 of the Unfunded Mandates Reform Act of 1995 (UMRA), Public Law 104–4, requires Federal agencies to prepare a written assessment of the costs, benefits, and other effects of proposed or final rules that include a Federal mandate likely to result in the expenditure by State, local, or tribal governments, in the aggregate, or by the private sector, of more than $100 million annually (adjusted for inflation with base year of 1995). Before promulgating an NHTSA rule for which a written statement is needed, section 205 of the UMRA generally requires the agency to identify and consider a reasonable number of regulatory alternatives and adopt the least costly, most cost-effective, or least burdensome alternative that achieves the objectives of the rule.

This proposed rule would not impose any unfunded mandates under the UMRA. This proposed rule would not meet the definition of a Federal mandate because it would not impose requirements on anyone. It would amend 49 CFR Part 572 by adding design and performance specifications for a 10-year-old test dummy that the agency may use in the Federal motor vehicle safety standards. If this proposed rule becomes final, it would affect only those businesses that choose to manufacture or test with the dummy. It would not result in costs of $100 million or more to either State, local, or tribal governments, in the aggregate, or to the private sector.

Plain Language

Executive Order 12866 requires each agency to write all rules in plain language. Application of the principles of plain language includes consideration of the following questions:

—Has the agency organized the material to suit the public's needs?
—Are the requirements in the rule clearly stated?
—Does the rule contain technical language or jargon that is not clear?
—Would a different format (grouping and order of sections, use of headings, paragraphing) make the rule easier to understand?
—Would more (but shorter) sections be better?
—Could the agency improve clarity by adding tables, lists, or diagrams?
—What else could the agency do to make this rulemaking easier to understand?

If you have any responses to these questions, please include them in your comments on this NPRM.

Regulation Identifier Number

The Department of Transportation assigns a regulation identifier number (RIN) to each regulatory action listed in the Unified Agenda of Federal Regulations. The Regulatory Information Service Center publishes the Unified Agenda in April and October of each year. You may use the RIN contained in the heading at the beginning of this document to find this action in the Unified Agenda.

List of Subjects in 49 CFR Part 572

Motor vehicle safety, Incorporation by reference.

In consideration of the foregoing, NHTSA is proposing to amend 49 CFR Part 572 as follows:

PART 572—ANTHROPOMORPHIC TEST DUMMIES

1. The authority citation for Part 572 would continue to read as follows:

Authority: 49 U.S.C. 322, 30111, 30115, 30117 and 30166; delegation of authority at 49 CFR 1.50.

2. 49 CFR part 572 would be amended by adding a new subpart T to read as follows:

Subpart T—Hybrid III 10-Year-Old Child Test Dummy (HIII–10C)

Sec.
572.170 Incorporation by reference.
572.171 General description.
572.172 Head assembly and test procedure.
572.173 Neck assembly and test procedure.
572.174 Thorax assembly and test procedure.
572.175 Upper and lower torso assemblies and torso flexion test procedure.
572.176 Knees and knee impact test procedure.
572.177 Test conditions and instrumentation.
Appendix—Figures to Subpart T of Part 572

§ 572.170 Incorporation by reference.

(a) The following materials are hereby incorporated into this Subpart by reference:

(1) A drawings and inspection package entitled ''Drawings and Specifications for the ''Hybrid III 10-year-old Child Test Dummy (HIII–10C), April 2005, consisting of:

(i) Drawing No. 420–0000, Complete Assembly HIII 10-year-old, incorporated by reference in § 572.171 and § 572.177.

(ii) Drawing No. 420–100, Head Assembly, incorporated by reference in § 572.171, § 572.172, § 572.173, and § 572.177.

(iii) Drawing No. 420–2000, Neck Assembly, incorporated by reference in § 572.171, § 572.173, and § 572.177.

(iv) Drawing No. 420–3000, Upper Torso Assembly, incorporated by reference in § 572.171, § 572.174, § 572.175, and § 572.177.

(v) Drawing No. 420–4000, Lower Torso Assembly, incorporated by reference in § 572.171, § 572.175, and § 572.177.

(vi) Drawing No. 420–5000–1, Complete Leg Assembly—left, incorporated by reference in § 572.171, § 572.176, and § 572.177.

(vii) Drawing No. 420–5000–2, Complete Leg Assembly—right, incorporated by reference in § 572.171, § 572.176, and § 572.177.

(viii) Drawing No. 420–7000–1, Complete Arm Assembly—left, and

(ix) Drawing No. 420–7000–2, Complete Arm Assembly—right.

(2) A procedures manual entitled ''Procedures for Assembly, Disassembly and Inspection (PADI) of the Hybrid III 10-year-old Child Test Dummy (HIII–10C), April 2005'';

(3) SAE Recommended Practice J211, Rev. Mar 95 ''Instrumentation for Impact Tests ''Part 1—Electronic Instrumentation'';

(4) SAE J1733 of 1994–12 ''Sign Convention for Vehicle Crash Testing''.

(b) The Director of the Federal Register approved the materials incorporated by reference in accordance with 5 U.S.C. 552(a) and 1 CFR part 51. Copies of the materials may be inspected at NHTSA's Technical Reference Library, 400 Seventh Street S.W., room 5109, Washington, DC, or at the Office of the Federal Register, 800 North Capitol Street, NW., Suite 700, Washington, DC.

(c) The incorporated materials are available as follows:

(1) The Drawings and Specifications for the Hybrid III 10-year-old Child Test Dummy (HIII–10C), April 2005, referred to in paragraph (a)(1) of this section and the Procedures for Assembly, Disassembly and Inspection (PADI) of the Hybrid III 10-year-old Child Test Dummy (HIII–10C), April 2005, referred to in paragraph (a)(2) of this section, are available through the DOT Docket Management System Docket No. 7659, dms.dot.gov. They are also available from Leet-Melbrook, Division of New RT, 1881 Woodfield Rd., Gaithersburg, Md. 20879, (301) 670–0090.

(2) The SAE materials referred to in paragraphs (a)(3) and (a)(4) of this section are available from the Society of Automotive Engineers, Inc., 400 Commonwealth Drive, Warrendale, Pa. 15096.

§ 572.171 General description.

(a) Hybrid III 10-year-old Child Crash Test Dummy (HIII–10C) is defined by drawings and specifications containing the following materials:

(1) Technical drawings and specifications package P/N 420–0000, the titles of which are listed in Table A;

(2) Procedures for Assembly, Disassembly and Inspection (PADI) of the Hybrid III 10-year-old Child Test Dummy (HIII–10C), (April 2005).

TABLE A

Component assembly	Drawing number
Head Assembly	420–100
Neck Assembly	420–2000
Upper Torso Assembly	420–3000
Lower Torso Assembly	420–4000
Complete Leg Assembly—left	420–5000–1
Complete Leg Assembly—right	420–5000–2
Complete Arm Assembly—left	420–7000–1
Complete Arm Assembly—right	420–7000–2

(b) Adjacent segments are joined in a manner such that, except for contacts existing under static conditions, there is no contact between metallic elements throughout the range of motion or under simulated crash impact conditions.

(c) The structural properties of the dummy are such that the dummy conforms to this Subpart in every respect before use in any test similar to those specified in Standard 213, Child Restraint Systems, and Standard 208, Occupant Crash Protection.

§ 572.172 Head assembly and test procedure.

(a) The head assembly for this test consists of the complete head (drawing 420–100), a six-axis neck transducer (drawing SA572–S11) or its structural replacement (drawing 78051–383X), and 3 accelerometers (drawing SA572–S4).

(b) When the head assembly is dropped from a height of 376.0 ± 1.0 mm (14.8 ± 0.04 in) in accordance with paragraph (c) of this section, the peak resultant acceleration at the location of the accelerometers at the head CG may not be less than 250 G or more than 300 G. The resultant acceleration vs. time history curve shall be unimodal; oscillations occurring after the main pulse must be less than 10 percent of the peak resultant acceleration. The lateral acceleration shall not exceed 15 G (zero to peak).

(c) Head test procedure. The test procedure for the head is as follows:

(1) Soak the head assembly in a controlled environment at any temperature between 18.9 and 25.6 °C (66 and 78 °F) and a relative humidity from 10 to 70 percent for at least four hours prior to a test.

(2) Prior to the test, clean the impact surface of the skin and the impact plate surface with isopropyl alcohol, trichloroethane, or an equivalent. The skin of the head must be clean and dry for testing.

(3) Suspend and orient the head assembly as shown in Figure T1. The lowest point on the forehead must be 376.0 ± 1.0 mm (14.8 ± 0.04 in) from the impact surface. The 1.57 mm (0.062 in) diameter holes located on either side of the dummy's head shall be used to ensure that the head is level with respect to the impact surface.

(4) Drop the head assembly from the specified height by means that ensure a smooth, instant release onto a rigidly supported flat horizontal steel plate which is 50.8 mm (2 in) thick and 610 mm (24 in) square. The impact surface shall be clean, dry and have a micro finish of not less than 203.2×10^{-6} mm (8 micro inches) (RMS) and not more than 2032.0×10^{-6} mm (80 micro inches) (RMS).

(5) Allow at least 2 hours between successive tests on the same head.

§ 572.173 Neck assembly and test procedure.

(a) The neck assembly for the purposes of this test consists of the assembly of components shown in drawing 420–2000.

(b) When the head-neck assembly consisting of the head (drawing 420–100), neck (drawing 420–2000), six-channel neck transducer (SA572–S11), lower neck bracket assembly (420–2070), and either three uniaxial accelerometers (drawing SA572–S4) or their mass equivalent installed in the head assembly as specified in drawing 420–100, is tested according to the test procedure in paragraph (c) of this section, it shall have the following characteristics:

(1) *Flexion.* (i) Plane D, referenced in Figure T2, shall rotate in the direction of preimpact flight with respect to the pendulum's longitudinal centerline between 74 degrees and 88 degrees. During the time interval while the rotation is within the specified corridor, the peak moment, measured by the neck transducer (drawing SA572–S11), about the occipital condyles may not be less than 50 N-m (36.9 ft-lbf) and not more than 62 N-m (45.7 ft-lbf). The positive moment shall decay for the first time to 10 N-m (7.4 ft-lbf) between 85 ms and 105 ms after time zero.

(ii) The moment shall be calculated by the following formula: Moment (N-m) = $M_y - (0.01778m) \times (F_x)$.

(iii) M_y is the moment about the y-axis, F_x is the shear force measured by the neck transducer (drawing SA572–S11), and 0.01778m is the distance from the shear force to the occipital condyle.

(2) *Extension.* (i) Plane D, referenced in Figure T3, shall rotate in the direction of preimpact flight with respect to the pendulum's longitudinal centerline between 99 degrees and 114 degrees. During the time interval while the rotation is within the specified

corridor, the peak moment, measured by the neck transducer (drawing SA572–S11), about the occipital condyles may not be more than −35 N-m (−25.8 ft-lbf) and not less than −47 N-m (−34.7 ft-lbf). The positive moment shall decay for the first time to −10 N-m (−7.4 ft-lbf) between 100 ms and 120 ms after time zero.

(ii) The moment shall be calculated by the following formula: Moment (N-m) = $M_y - (0.01778m) \times (F_x)$.

(iii) M_y is the moment about the y-axis, F_x is the shear force measured by the neck transducer (drawing SA572–S11), and 0.01778m is the distance from the shear force to the occipital condyle.

(3) Time zero is defined as the time of initial contact between the pendulum striker plate and the honeycomb material. All data channels shall be at the zero level at this time.

(c) *Test Procedure.* The test procedure for the neck assembly is as follows:

(1) Soak the neck assembly in a controlled environment at any temperature between 20.6 and 22.2 °C (69 and 72 °F) and a relative humidity between 10 and 70 percent for at least four hours prior to a test.

(2) Torque the hex nut (drawing 9000130) on the neck cable (drawing 420–2060) to 0.9 ± 0.2 N-m (8 ± 2 in-lbf) before each test on the same neck.

(3) Mount the head-neck assembly, defined in subsection (b) of this section, on the pendulum described in Figure 22 of 49 CFR 572 so that the leading edge of the lower neck bracket coincides with the leading edge of the pendulum as shown in Figure T2 for flexion tests and Figure T3 for extension tests.

(4)(i) Release the pendulum and allow it to fall freely from a height to achieve an impact velocity of 6.1 ± 0.12 m/s (20.0 ± 0.4 ft/s) for flexion tests and 5.03 ± 0.12 m/s (16.50 ± 0.40 ft/s) for extension tests, measured by an accelerometer mounted on the pendulum as shown in Figure T2 at the instant of contact with the honeycomb.

(ii) Stop the pendulum from the initial velocity with an acceleration vs. time pulse that meets the velocity change as specified below. Integrate the pendulum acceleration data channel to obtain the velocity vs. time curve:

TABLE B.—PENDULUM PULSE

Time (ms)	Flexion		Extension	
	m/s	ft/s	m/s	ft/s
10	1.64–2.04	5.38–6.69	1.59–1.89	4.89–6.20
20	3.04–4.04	9.97–13.25	2.88–3.68	9.45–12.07
30	4.45–5.65	14.60–18.53	4.20–5.20	13.78–17.06

§ 572.174 Thorax assembly and test procedure.

(a) The thorax consists of the part of the torso assembly designated as the upper torso (drawing 420–3000).

(b) When the anterior surface of the thorax of a completely assembled dummy (drawing 420–0000) is impacted by a test probe conforming to section 572.177 at 6.00 ± 0.12 m/s (22.0 ± 0.4 ft/s) according to the test procedure in paragraph (c) of this section:

(1) Maximum sternum displacement (compression) relative to the spine, measured with chest deflection transducer (drawing SA572–T4), must be not less than 40.5 mm (1.59 in) and not more than 48.5 mm (1.91 in). Within this specified compression corridor, the peak force, measured by the impact probe as defined in section 572.177 and calculated in accordance with paragraph (b)(3) of this section, shall not be less than 1830 N (411 lbf) and not more than 2330 N (524 lbf). The peak force after 20 mm (0.79 in) of sternum displacement but before reaching the minimum required 40.5 mm (1.59 in) sternum displacement limit shall not exceed 2330 N (524 lbf).

(2) The internal hysteresis of the ribcage in each impact as determined by the plot of force vs. deflection in paragraph (a)(1) of this section shall be not less than 69 percent but not more than 85 percent. The hysteresis shall be calculated by determining the ratio of the area between the loading (from time zero to maximum deflection) and unloading portions (from maximum deflection to zero force) of the force deflection curve to the area under the loading portion of the curve.

(3) The force shall be calculated by the product of the impactor mass and its measured deceleration.

(b) *Test Procedure.* The test procedure for the thorax assembly is as follows:

(1) The dummy is clothed in a form fitting cotton stretch above-the-elbow sleeved shirt and above-the-knees pants. The weight of the shirt and pants shall not exceed 0.14 kg (0.30 lb) each.

(2) Torque the lumbar cable (drawing 420–4130) to 0.9 ± 0.2 N-m (8 ± 2 in-lbf) and set the lumbar adjustment angle to 12 degrees. Set the neck angle to 16 degrees.

(3) Soak the dummy in a controlled environment at any temperature between 20.6 and 22.2 °C (69 and 72 °F) and a relative humidity between 10 and 70 percent for at least four hours prior to a test.

(4) Seat and orient the dummy on a seating surface without back support as shown in Figure T4, with the limbs extended horizontally and forward, parallel to the midsagittal plane, the midsagittal plane vertical within ± 1 degree and the ribs level in the anterior-posterior and lateral directions within ± 0.5 degrees.

(5) Establish the impact point at the chest midsagittal plane so that the impact point of the longitudinal centerline of the probe coincides with the midsagittal plane of the dummy within ± 2.5 mm (0.1 in) and is 12.7 ± 1.1 mm (0.5 ± 0.04 in) below the horizontal-peripheral centerline of the No. 3 rib and is within 0.5 degrees of a horizontal line in the dummy's midsagittal plane.

(6) Impact the thorax with the test probe so that at the moment of contact the probe's longitudinal centerline falls within 2 degrees of a horizontal line in the dummy's midsagittal plane.

(7) Guide the test probe during impact so that there is no significant lateral, vertical, or rotational movement.

(8) No suspension hardware, suspension cables, or any other attachments to the probe, including the velocity vane, shall make contact with the dummy during the test.

§ 572.175 Upper and lower torso assemblies and torso flexion test procedure.

(a) The test objective is to determine the stiffness of the molded lumbar assembly (drawing 420–4100), abdominal insert (drawing 420–4300), and chest flesh assembly (drawing 420–3560) on resistance to articulation between the upper torso assembly (drawing 420–3000) and lower torso assembly (drawing 420–4000).

(b) When the upper torso assembly of a seated dummy is subjected to a force continuously applied at the head to neck pivot pin level through a rigidly attached adaptor bracket as shown in

Figure T5 according to the test procedure set out in paragraph (c) of this section:

(1) The lumbar spine-abdomen-chest flesh assembly shall flex by an amount that permits the upper torso assembly to translate in angular motion relative to the vertical transverse plane 35 ± 0.5 degrees at which time the force applied must be not less than 190 N (42.7 lbf) and not more than 240 N (54.0 lbf).

(2) Upon removal of the force, the torso assembly must return to within 8 degrees of its initial position.

(c) *Test Procedure.* The test procedure for the upper/lower torso assembly is as follows:

(1) Torque the lumbar cable (drawing 420–4130) to 0.9 ± 0.2 N-m (8 ± 2 in-lbf) and set the lumbar adjustment angle to 12 degrees. Set the neck angle to 16 degrees.

(2) Soak the dummy in a controlled environment at any temperature between 20.6 and 22.2 °C (69 and 72 °F) and a relative humidity between 10 and 70 percent for at least four hours prior to a test.

(3) Assemble the complete dummy (with or without the legs below the femurs) and attach to the fixture in a seated posture as shown in Figure T5.

(4) Secure the pelvis to the fixture at the pelvis instrument cavity rear face by threading four ¼ inch cap screws into the available threaded attachment holes. Tighten the mountings so that the test material is rigidly affixed to the test fixture and the pelvic-lumbar joining surface is 18 degrees from horizontal and the legs are parallel with the test fixture.

(5) Attach the loading adaptor bracket to the spine of the dummy as shown in Figure T5.

(6) Inspect and adjust, if necessary, the seating of the abdominal insert within the pelvis cavity and with respect to the chest flesh, assuring that the chest flesh provides uniform fit and overlap with respect to the outside surface of the pelvis flesh.

(7) Flex the dummy's upper torso three times between the vertical and until the torso reference frame, as shown in Figure T5, reaches 30 degrees from the vertical transverse plane. Bring the torso to vertical orientation and wait for 30 minutes before conducting the test. During the 30-minute waiting period, the dummy's upper torso shall be externally supported at or near its vertical orientation to prevent it from drooping.

(8) Remove all external support and wait two minutes. Measure the initial orientation angle of the torso reference plane of the seated, unsupported dummy as shown in Figure T5. The initial orientation angle may not exceed 20 degrees.

(9) Attach the pull cable and the load cell as shown in Figure T5.

(10) Apply a tension force in the midsagittal plane to the pull cable as shown in Figure T5 at any upper torso deflection rate between 0.5 and 1.5 degrees per second, until the angle reference plane is at 35 ± 0.5 degrees of flexion relative to the vertical transverse plane.

(11) Continue to apply a force sufficient to maintain 35 ± 0.5 degrees of flexion for 10 seconds, and record the highest applied force during the 10-second period.

(12) Release all force at the attachment bracket as rapidly as possible, and measure the return angle with respect to the initial angle reference plane as defined in paragraph (c)(7) of this section three minutes after the release.

§ 572.176 Knees and knee impact test procedure.

(a) The knee assembly for the purpose of this test is the part of the leg assembly shown in drawing 420–5000.

(b) When the knee assembly, consisting of lower upper leg assembly (420–5200), femur load transducer (SA572–S10) or its structural replacement (127–4007), lower leg assembly (420–5300), ankle assembly (420–5400), and foot molded assembly (420–5500) is tested according to the test procedure in paragraph (c) of this section:

(1) The peak resistance force as measured with the test probe-mounted accelerometer must not be less than 2560 N (576 lbf) and not more than 3140 N (706 lbf).

(2) The force shall be calculated by the product of the impactor mass and its deceleration.

(c) *Test Procedure.* The test procedure for the knee assembly is as follows:

(1) Soak the knee assembly in a controlled environment at any temperature between 20.6 and 22.2 °C (69 and 72 °F) and a relative humidity between 10 and 70 percent for at least four hours prior to a test.

(2) Mount the test material and secure it to a rigid test fixture as shown in Figure T6. No part of the foot or tibia may contact any exterior surface.

(3) Align the test probe so that throughout its stroke and at contact with the knee it is within 2 degrees of horizontal and collinear with the longitudinal centerline of the femur.

(4) Guide the pendulum so that there is no significant lateral, vertical, or rotational movement at the time of initial contact between the impactor and the knee.

(5) The test probe velocity at the time of contact shall be 2.1 ± 0.03 m/s (6.9 ± 0.1 ft/s).

(6) No suspension hardware, suspension cables, or any other attachments to the probe, including the velocity vane, shall make contact with the dummy during the test.

§ 572.177 Test conditions and instrumentation.

(a) The test probe for thoracic impacts shall be of rigid metallic construction, concentric in shape, and symmetric about its longitudinal axis. It shall have a mass of 6.89 ± 0.012 kg (15.2 ± 0.05 lbs) and a minimum mass moment of inertia of 2040 kg-cm^2 (1.69 lbf-in-sec^2) in yaw and pitch about the CG. One-third (⅓) of the weight of the suspension cables and their attachments to the impact probe must be included in the calculation of mass, and such components may not exceed five percent of the total weight of the test probe. The impacting end of the probe, perpendicular to and concentric with the longitudinal axis, must be at least 25.4 mm (1.0 in) long, and have a flat, continuous, and non-deformable 121 ± 0.25 mm (4.76 ± 0.01 in) diameter face with a maximum edge radius of 12.7 mm (0.5 in). The probe's end opposite to the impact face must have provisions for mounting of an accelerometer with its sensitive axis collinear with the longitudinal axis of the probe. No concentric portions of the impact probe may exceed the diameter of the impact face. The impact probe shall have a free air resonant frequency of not less than 1000 Hz, which may be determined using the procedure listed in Docket No. NHTSA–7659–6.

(b) The test probe for knee impacts shall be of rigid metallic construction, concentric in shape, and symmetric about its longitudinal axis. It shall have a mass of 1.91 ± 0.01 kg (4.21 ± 0.02 lbs) and a minimum mass moment of inertia of 140 kg-cm^2 (0.12 lbf-in-sec^2) in yaw and pitch about the CG. One third (⅓) of the weight of the suspension cables and their attachments to the impact probe may be included in the calculation of mass, and such components may not exceed five percent of the total weight of the test probe. The impacting end of the probe, perpendicular to and concentric with the longitudinal axis, must be at least 12.5 mm (0.5 in) long, and have a flat, continuous, and non-deformable 76.2 ± 0.2 mm (3.00 ± 0.01 in) diameter face with a maximum edge radius of 12.7 mm (0.5 in). The probe's end opposite to the impact face must have provisions for mounting an accelerometer with its sensitive axis collinear with the

longitudinal axis of the probe. No concentric portions of the impact probe may exceed the diameter of the impact face. The impact probe must have a free air resonant frequency of not less than 1000 Hz, which may be determined using the procedure listed in Docket No. NHTSA–7659–6.

(c) Head accelerometers shall have dimensions, response characteristics, and sensitive mass locations specified in drawing SA572–S4 and be mounted in the head as shown in drawing 420–0000, sheet 2 of 6.

(d) The upper neck force/moment transducer shall have the dimensions, response characteristics, and sensitive axis locations specified in drawing SA572-S11 and be mounted in the head-neck assembly as shown in drawing 420–0000, sheet 2 of 6.

(e) The thorax accelerometers shall have the dimensions, response characteristics, and sensitive mass locations specified in drawing SA572–S4 and be mounted in the torso assembly in a triaxial configuration within the spine box instrumentation cavity.

(f) The lumbar spine force-moment transducer shall have the dimensions, response characteristics, and sensitive axis locations specified in drawing SA572–S12 and be mounted in the lower torso assembly as shown in drawing 420–4000.

(g) The iliac spine force transducers shall have the dimensions and response characteristics specified in drawing SA572–S13 L&R and be mounted in the lower torso assembly as shown in drawing 420–4000.

(h) The pelvis accelerometers shall have the dimensions, response characteristics, and sensitive mass locations specified in drawing SA572–S4 and be mounted in the torso assembly in triaxial configuration in the pelvis bone as shown in drawing 420–0000, sheet 2 of 6.

(i) The single axis femur force transducer (SA572–S10) shall have the dimensions, response characteristics, and sensitive axis locations specified in the appropriate drawing and be mounted in the upper leg assembly, replacing the femur load cell simulator (drawing 127–4007) s shown in drawing 420–5100.

(j) The chest deflection transducer shall have the dimensions and response characteristics specified in drawing SA572–S50 and be mounted to the upper torso assembly as shown in drawing 420–3000, sheet 2 of 6.

(k) The following instrumentation is available for installation in the dummy for research purposes but is not to be used for calibration and/or compliance certification:

(1) The thorax accelerometers have the dimensions, response characteristics, and sensitive mass locations specified in drawing SA572–S4 and be mounted in the torso assembly in uniaxial fore-and-aft oriented configuration arranged as corresponding pairs in two locations each on the sternum and at the spine box of the upper torso assembly as shown in drawing 420–0000, sheet 2 of 6.

(2) The optional IR–Tracc chest deflection system transducer has the dimensions and response characteristics specified in drawing SA572–S43 and is mounted to the spine box assembly as shown in drawing 420–8000.

(3) The lower neck force/moment transducer has the dimensions, response characteristics, and sensitive axis locations specified in drawing SA572–S40 and is mounted to the neck assembly by replacing the lower neck mounting bracket 420–2070 as shown in drawing 420–2000.

(4) The tilt sensor has the dimensions and response characteristics specified in drawing SA572–S42 and is mounted to the head and pelvis accelerometer assemblies as shown in drawing 420–0000, sheet 2 of 6.

(5) The clavicle force/moment transducer shall have the dimensions, response characteristics, and sensitive axis locations specified in drawing SA572–S41 and is mounted in the shoulder assembly as shown in drawing 420–3800.

(l) The outputs of acceleration and force-sensing devices installed in the dummy and in the test apparatus specified by this part shall be recorded in individual data channels that conform to SAE Recommended Practice J211, Rev. Mar95, ''Instrumentation for Impact Tests,'' except as noted, with channel classes as follows:

(1) Head acceleration—Class 1000

(2) Neck:

(i) Forces—Class 1000

(ii) Moments—Class 600

(iii) Pendulum acceleration—Class 180

(3) Thorax:

(i) Rib acceleration—Class 1000

(ii) Spine and pendulum accelerations—Class 180

(iii) Sternum deflection—Class 180

(iv) Forces—Class 1000

(v) Moments—Class 600

(vi) Shoulder forces—Class 180

(4) Lumbar:

(i) Forces—Class 1000

(ii) Moments—Class 600

(iii) Torso flexion pulling force—Class 60 if data channel is used

(5) Pelvis:

(i) Accelerations—Class 1000

(ii) Iliac forces—Class 180

(6) Femur forces—Class 600

(m) Coordinate signs for instrumentation polarity shall conform to the Sign Convention For Vehicle Crash Testing, Surface Vehicle Information Report, SAE J1733, 1994–12.

(n) The mountings for sensing devices shall have no resonant frequency less than 3 times the frequency range of the applicable channel class.

(o) Limb joints must be set at one G, barely restraining the weight of the limb when it is extended horizontally. The force needed to move a limb segment shall not exceed 2G throughout the range of limb motion.

(p) Performance tests of the same component, segment, assembly, or fully assembled dummy shall be separated in time by not less than 30 minutes unless otherwise noted.

(q) Surfaces of dummy components may not be painted except as specified in this subpart or in drawings subtended by this subpart.

BILLING CODE 4910–59–P

Appendix—Figures to Subpart T of Part 572

FIGURE T1

HEAD DROP TEST SET-UP SPECIFICATIONS

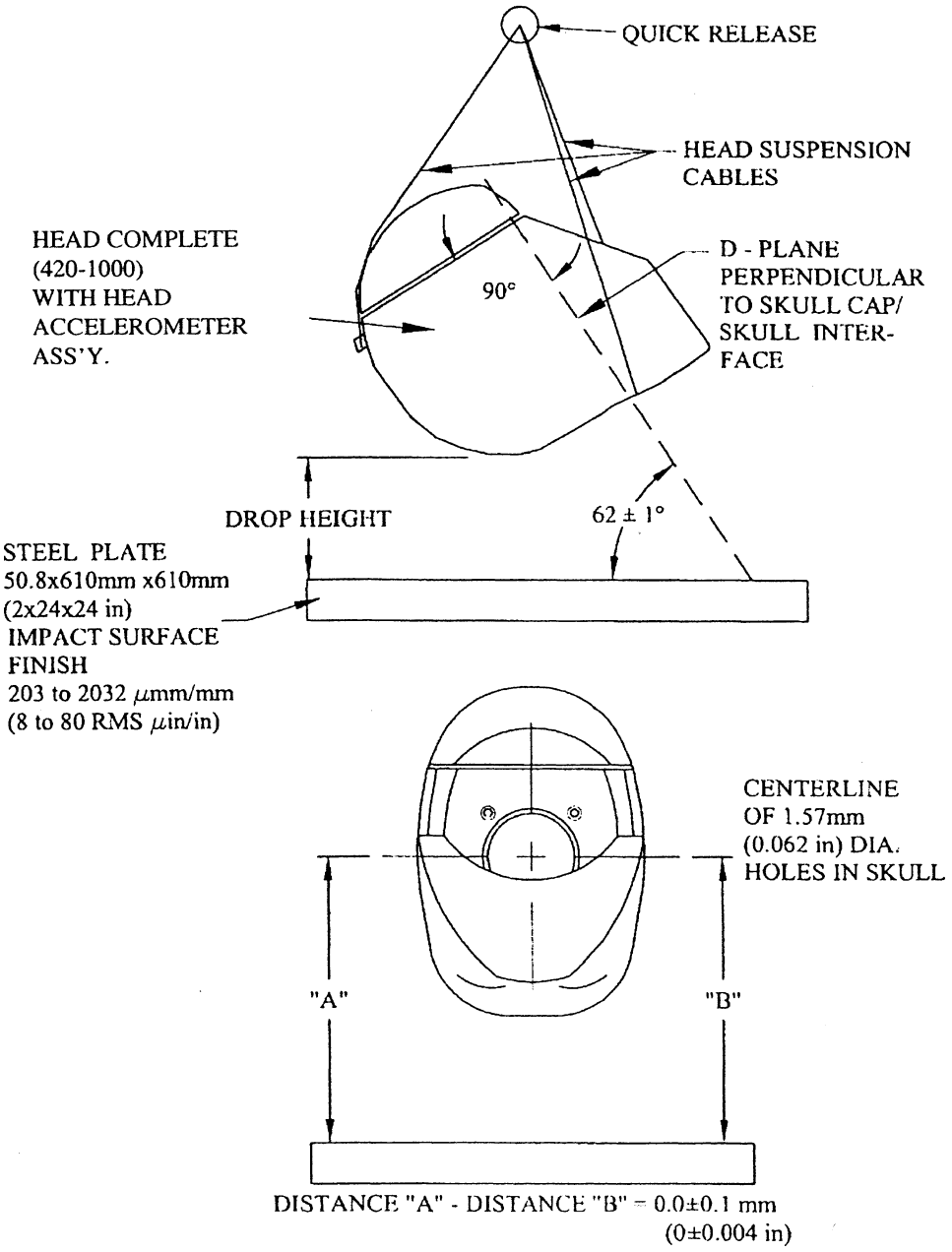

FIGURE T2
NECK FLEXION TEST SETUP SPECIFICATIONS

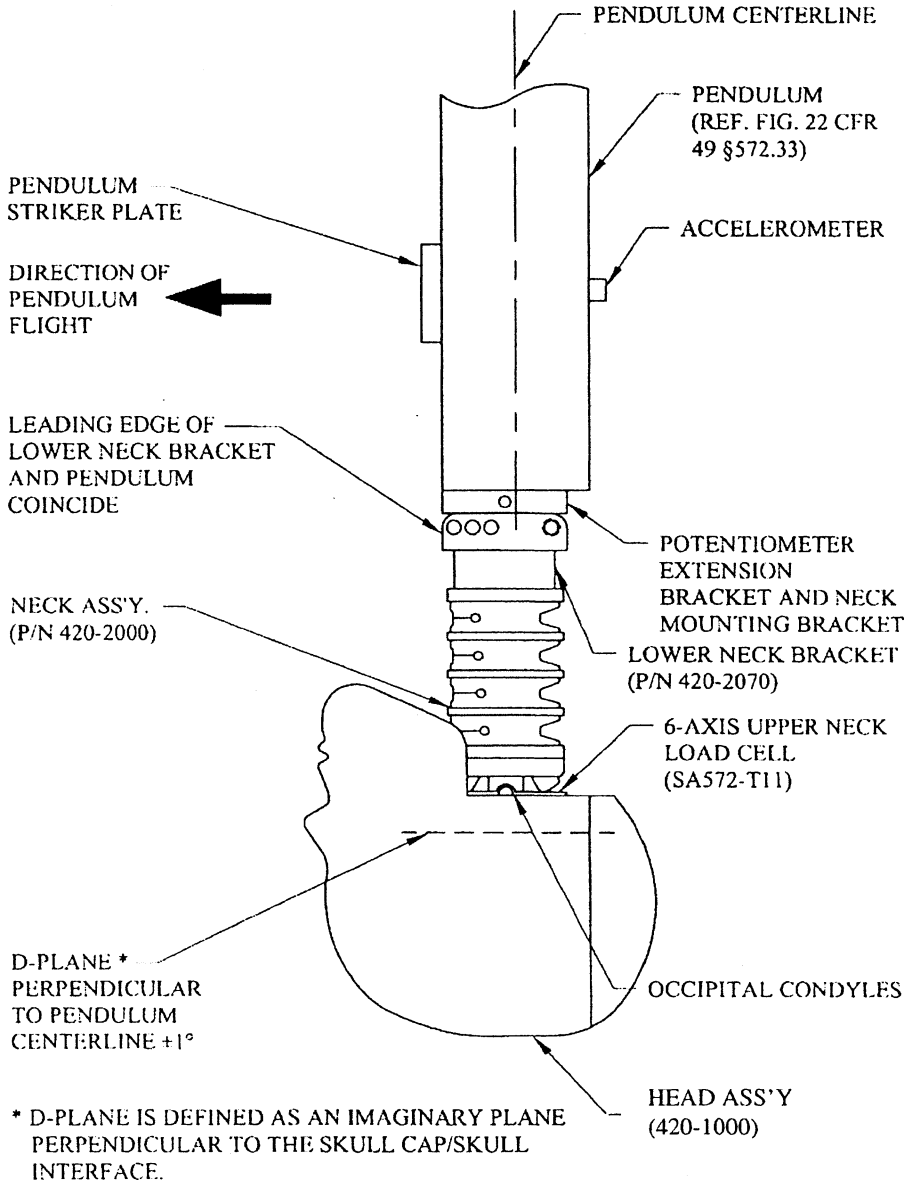

FIGURE T3
NECK EXTENSION TEST SETUP SPECIFICATIONS

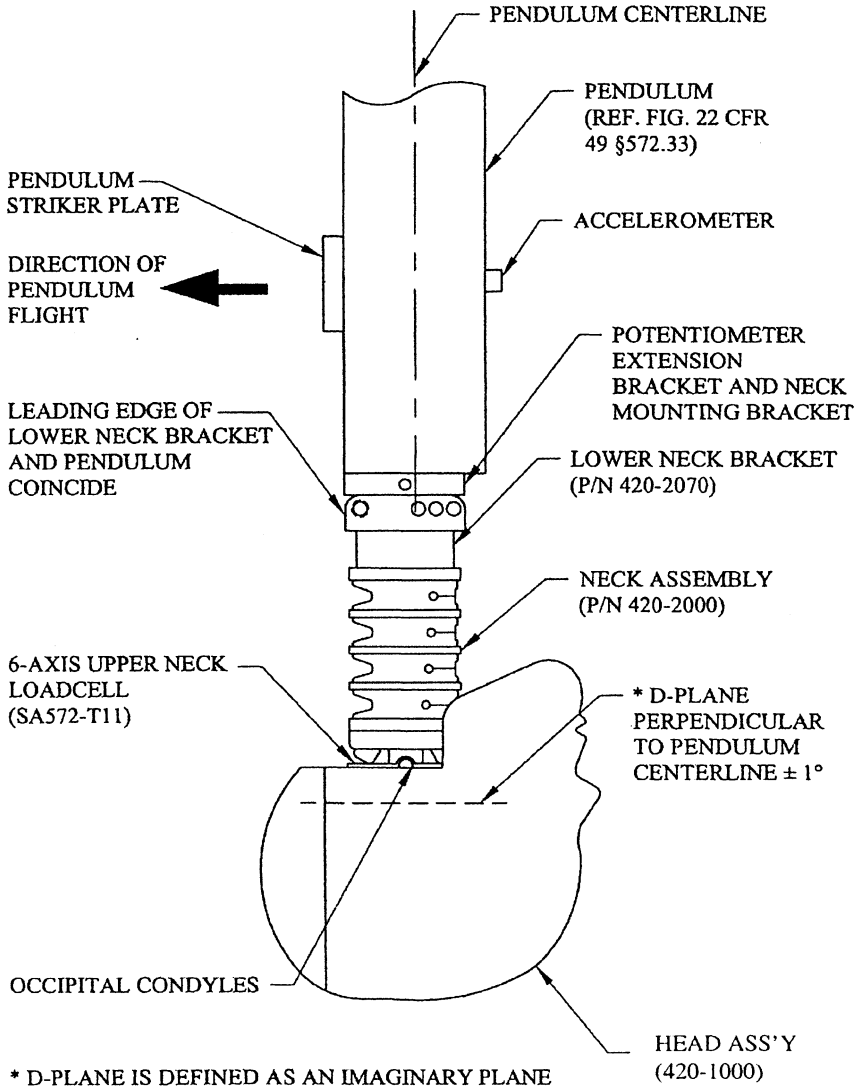

* D-PLANE IS DEFINED AS AN IMAGINARY PLANE PERPENDICULAR TO THE SKULL CAP/SKULL INTERFACE.

FIGURE T4
THORAX IMPACT TEST SETUP SPECIFICATIONS

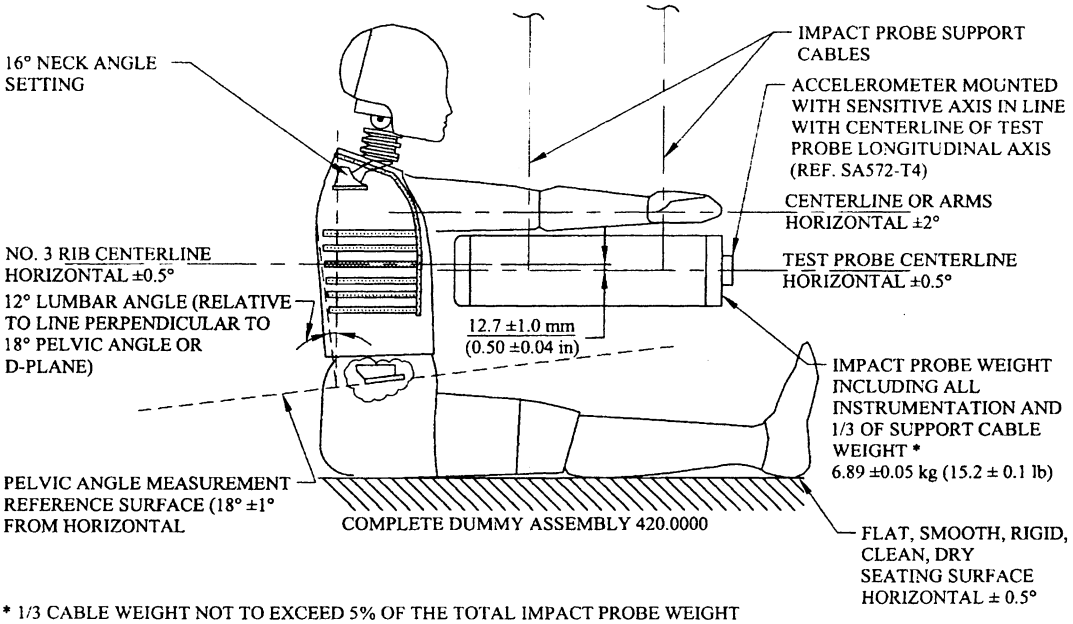

* 1/3 CABLE WEIGHT NOT TO EXCEED 5% OF THE TOTAL IMPACT PROBE WEIGHT

FIGURE T5
TORSO FLEXION TEST SET UP SPECIFICATIONS

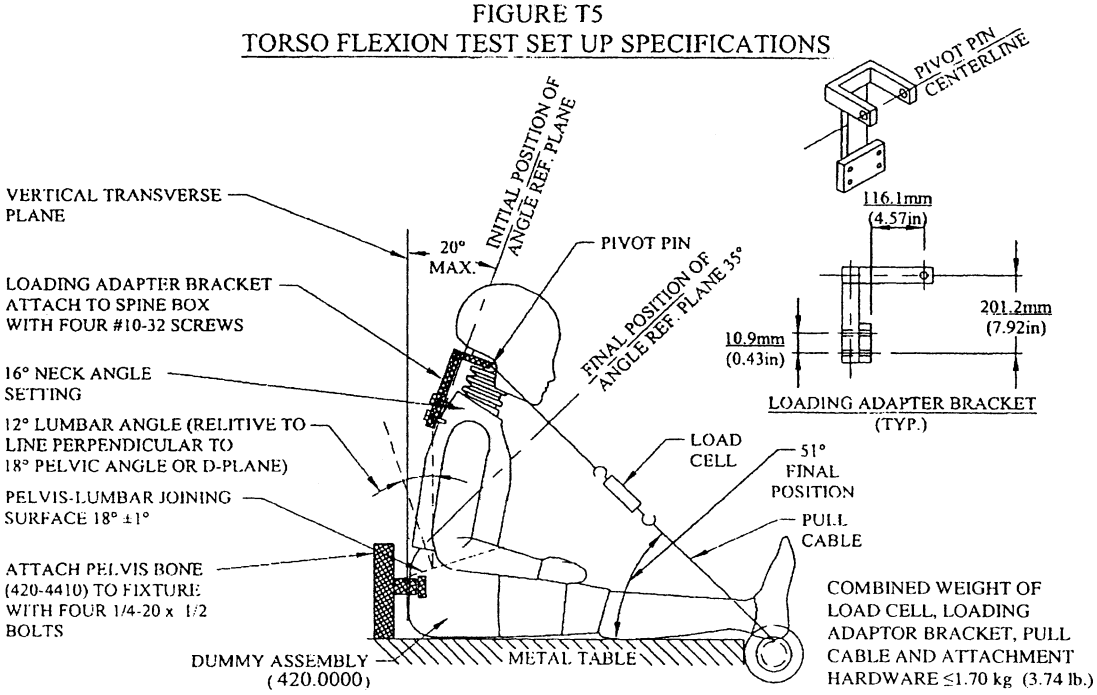

FIGURE T6
KNEE IMPACT TEST SETUP SPECIFICATIONS

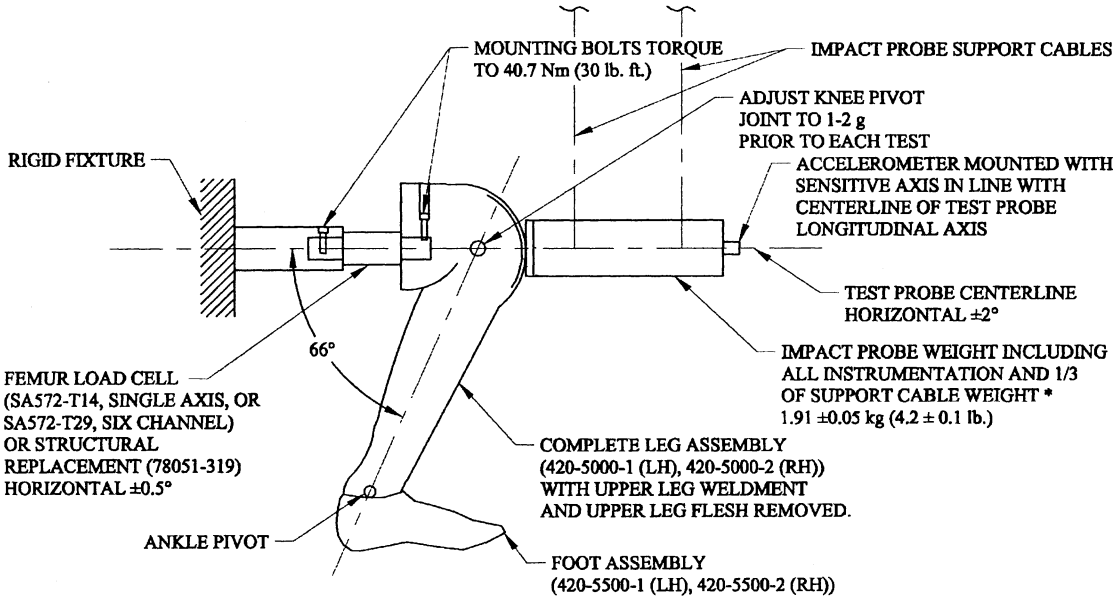

Issued: June 28, 2005.

Stephen R. Kratzke,

Associate Administrator for Rulemaking.

[FR Doc. 05–13659 Filed 7–12–05; 8:45 am]

BILLING CODE 4910–59–C

DEPARTMENT OF COMMERCE

National Oceanic and Atmospheric Administration

50 CFR Part 229

[Docket No. 050127019–5178–02; I.D. 120304D]

RIN 0648–AS01

Taking of Marine Mammals Incidental to Commercial Fishing Operations; Atlantic Large Whale Take Reduction Plan Regulations

AGENCY: National Marine Fisheries Service (NMFS), National Oceanic and Atmospheric Administration (NOAA), Commerce.

ACTION: Proposed rule; extension of public comment period.

SUMMARY: On June 21, 2005, a proposed rule to amend the regulations implementing the Atlantic Large Whale Take Reduction Plan (ALWTRP) was published in the **Federal Register**. NMFS is extending the comment period on this proposed rule by 30 days to August 22, 2005, to allow the public a full 60 days to submit comments.

DATES: Comments on the proposed rule must be received by 5 p.m. EST on August 22, 2005.

ADDRESSES: Comments may be submitted on this proposed rule, identified by RIN 0648–AS01, by any one of the following methods:

(1) NMFS/Northeast Region website: *http://www.nero.noaa.gov/nero/regs/com.html*. Follow the instructions on the website for submitting comments.

(2) Federal eRulemaking Portal: *http://www.regulations.gov*. Follow the instruction on the website for submitting comments.

(3) E-mail: *whalerule.comments@noaa.gov*. Please include the RIN 0648–AS01 in the subject line of the message.

(4) Mail: Mary Colligan, Assistant Regional Administrator for Protected Resources, NMFS, Northeast Region, 1 Blackburn Dr., Gloucester, MA 01930, ATTN: ALWTRP Proposed Rule.

(5) Facsimile (fax) to: 978–281–9394, ATTN: ALWTRP Proposed Rule.

Copies of the Draft Environmental Impact Statement/Regulatory Impact Review for this action can be obtained from the ALWTRP website listed under the Electronic Access portion of this document. Atlantic Large Whale Take Reduction Team (ALWTRT) meeting summaries, and progress reports on implementation of the ALWTRP may be obtained by writing Diane Borggaard, NMFS, Northeast Region, 1 Blackburn Dr., Gloucester, MA 01930 or Juan Levesque, NMFS, Southeast Region, 9721 Executive Center Dr., St.Petersburg, FL 33702–2432. For additional **ADDRESSES** and web sites for document availability see **SUPPLEMENTARY INFORMATION**.

FOR FURTHER INFORMATION CONTACT: Diane Borggaard, NMFS, Northeast Region, 978–281–9300 Ext. 6503, *diane.borggaard@noaa.gov*; Kristy Long, NMFS, Office of Protected Resources, 301–713–2322, *kristy.long@noaa.gov*; or Barb Zoodsma, NMFS, Southeast Region, 904–321–2806, *barb.zoodsma@noaa.gov*.

SUPPLEMENTARY INFORMATION:

Electronic Access

Several of the background documents for the ALWTRP and the take reduction planning process can be downloaded from the ALWTRP web site at *http://www.nero.noaa.gov/whaletrp/*. Copies of the most recent marine mammal stock assessment reports may be obtained by writing to Richard Merrick, NMFS, 166 Water St., Woods Hole, MA 02543 or can be downloaded from the Internet at *http://www.nefsc.noaa.gov/psb/assesspdfs.htm*. In addition, copies of the documents entitled ''Defining Triggers for Temporary Area Closures to Protect Right Whales from Entanglements: Issues and Options'' and ''Identification of Seasonal Area Management Zones for North Atlantic Right Whale Conservation'' are available by writing to Diane Borggaard, NMFS, Northeast Region, 1 Blackburn Dr., Gloucester, MA 01930 or can be downloaded from the ALWTRP website at *http://www.nero.noaa.gov/whaletrp/*. The complete text of the regulations

implementing the ALWTRP can be found either in the Code of Federal Regulations (CFR) at 50 CFR 229.32 or downloaded from the website, along with a guide to the regulations.

Dated: July 8, 2005.

Rebecca Lent,

Deputy Asistant Administrator for Regulatory Programs, National Marine Fisheries Service.

[FR Doc. 05–13795 Filed 7–12–05; 8:45 am]

BILLING CODE 3510–22–S

DEPARTMENT OF COMMERCE

National Oceanic and Atmospheric Administration

50 CFR Part 660

[Docket No. 050620162–5162–01; I.D. 061505D]

RIN 0648–AS30

Fisheries off West Coast States and in the Western Pacific; Pelagic Fisheries; Additional Measures to Reduce the Incidental Catch of Seabirds in the Hawaii Pelagic Longline Fishery

AGENCY: National Marine Fisheries Service (NMFS), National Oceanic and Atmospheric Administration (NOAA), Commerce.

ACTION: Proposed rule; request for comments.

SUMMARY: This proposed rule would require all Hawaii-based longline fishing vessels to either side-set (set longline gear from the side of the vessel rather than from the stern), or use a combination of other seabird mitigation measures to prevent seabirds, e.g., Laysan and black-footed albatrosses, from being accidentally hooked or entangled, and killed during fishing operations. This proposed rule is also intended to reduce the potential for interaction with endangered short-tailed albatrosses that are known to be in the area in which the fishery operates.

DATES: Comments on the proposed rule must be received in writing by August 12, 2005.

ADDRESSES: You may submit comments on this proposed rule or its Initial Regulatory Flexibility Analysis (IRFA), identified by 0648–AS30 by any of the following methods:

- E-mail: *AS30–Seabirds@noaa.gov*. Include in the subject line of the e-mail comment the following document identifier: Seabird Measures. Comments sent via e-mail, including all attachments, must not exceed a 10 megabyte file size.
- Federal e-Rulemaking portal: *http://www.regulations.gov*. Follow the instructions for submitting comments.
- Mail: William L. Robinson, Administrator, NMFS, Pacific Islands Region (PIR), 1601 Kapiolani Boulevard, Suite 1110, Honolulu, HI 96814.
- Fax: 808–973–2941.

Copies of the regulatory amendment document (6 April 2005) entitled ''Additional Measures to Reduce the Incidental Catch of Seabirds in the Hawaii-Based Longline Fishery'' (containing a Regulatory Impact Review and IRFA) and Final Environmental Impact Statement (FEIS) prepared for this action may be obtained from William L. Robinson (see **ADDRESSES**). Requests should indicate whether paper copies or electronic copies on CD-ROM are preferred. These documents are also available at the following websites: *www.wpcouncil.org* and *http://swr.nmfs.noaa.gov/pir*.

FOR FURTHER INFORMATION CONTACT: Robert Harman, NMFS PIR, 808–973–2937.

SUPPLEMENTARY INFORMATION: Hawaii-based longline fishing vessels inadvertently hook or entangle, and kill black-footed albatrosses (*Phoebastria nigripes*) and Laysan albatrosses (*Phoebastria immutabilis*) that nest in the Northwestern Hawaiian Islands (NWHI). Short-tailed albatrosses (*Phoebastria albatrus*), an endangered species that nests primarily on Tori Island off Japan and known to visit the NWHI, have been sighted occasionally in the vicinity of Hawaii longline vessels during fishing operations. However, there has been no confirmed report of any interaction between the short-tailed albatross and Hawaii longline fishery.

The Western Pacific Fishery Management Council (WPFMC) developed and proposed seabird mitigation measures for Hawaii-based longline vessels, but these were not finalized due to a Biological Opinion issued late in 2000 by the U.S. Fish and Wildlife Service (USFWS 2000 Biological Opinion) under section 7 of the Endangered Species Act (ESA). In mid–2001, NMFS implemented emergency seabird mitigation measures (66 FR 31561, 12 June 2001) in accordance with the terms and condition of the USFWS 2000 Biological Opinion on the short-tailed albatross.

On May 14, 2002, NMFS published a final rule (67 FR 34408) establishing permanent seabird mitigation measures recommended by the WPFMC for the Hawaii longline fishery. That rule, which replaced the 2001 emergency interim rule, is the result of the WPFMC's continued effort and commitment to minimize interactions between seabirds and the Hawaii-based longline fishery. A description of the WPFMC's role and ongoing actions in seabird mitigation in the western Pacific region is contained in the regulatory amendment document entitled ''Additional Measures to Reduce the Incidental Catch of Seabirds in the Hawaii-based Longline Fishery'' (WPFMC, 6 April 2005, see **ADDRESSES**).

The May 2002 final rule required owners and operators of all vessels registered for use with Hawaii longline limited access permits and deploying longline gear north of 23° N. latitude to use line-setting machines (line shooters) with weighted branch lines, or use basket-style longline gear, and to use thawed, blue-dyed bait and strategic offal discards (which include fish, fish parts, or spent bait) during the setting and hauling of longline gear. The owners and operators of these vessels were also required to follow certain seabird handling techniques, and annually complete a protected species educational workshop on seabird mitigation conducted by NMFS.

Since 2000, the number of fishery interactions with all seabirds was significantly reduced due to the closure of the shallow-set (swordfish-directed) component of the Hawaii-based longline fishery. This closure was implemented by NMFS to protect sea turtles via a number of emergency actions (64 FR 72290, 27 December 1999; 65 FR 51992, 25 August 2000; 66 FR 15358, 19 March 2001) and a final rule (66 FR 31561, 12 June 2001).

Between 2002 and 2003, NMFS, WPFMC, and the fishing industry collaborated in a series of research activities to test new seabird deterrent methods for Hawaii longline vessels. The trials found that underwater setting chutes (which deploy baited hooks underwater and out of the reach of seabirds) and side-setting were both effective in reducing interactions with seabirds. These and other seabird deterrent strategies were analyzed and considered by the WPFMC as potential new seabird mitigation methods to cost-effectively further reduce the effects of the Hawaii longline fleet on seabirds.

In March 2004, in concert with the regulatory amendment to reopen the swordfish component of the Hawaii longline fishery, NMFS and USFWS reinitiated ESA section 7 consultations on the effect of the fishery on the short-tailed albatross. During the consultation process, NMFS and USFWS also held discussions with the Hawaii Longline Association and WPFMC staff that included the consideration of

implementing side-setting and other effective mitigation measures by NMFS under the Fishery Management Plan for the Pelagics Fisheries of the Western Pacific Region (Pelagics FMP).

On April 2, 2004, NMFS published a final rule (69 FR 17329) that reopened the shallow-set component of the Hawaii-based longline fishery. In this fishery, longline gear is deployed (set) relatively shallow, generally in the upper 100 m (328 ft) of the water column, by fishing vessels that are targeting swordfish, compared to the deeper longline sets targeting bigeye tuna. Shallow-set longline gear does incidentally take sea turtles, such as leatherback and loggerhead turtles, but this technique also poses a problem for seabirds. The problem is acute when a longline vessel deploys fishing gear during the early evening period when seabirds, such as Layman and black-footed albatrosses, are foraging for food at sea and are attracted to the baited hooks of the longline gear as it is being deployed. The April 2004 rule placed restrictions on the types of hook and bait that may be used, annual fleet-wide limits on fishery interactions with leatherback and loggerhead sea turtles, an annual fleet-wide limit on shallow-set fishing effort (2,120 sets), and other sea turtle mitigation measures. The rule also contained a seabird mitigation measure that required Hawaii longline vessels, when making shallow sets north of 23° N. lat., to start and complete the deployment of longline gear (set and haul) during the nighttime (specifically to set no earlier than one hour after local sunset and to finish hauling no later than local sunrise) to minimize interactions with seabirds.

At its meeting in June 2004, the WPFMC took initial action to establish additional seabird mitigation measures based on the promising results of the seabird mitigation studies conducted in 2002 and 2003. Subsequently, at its October 2004 meeting, the WPFMC recommended that NMFS amend the Pelagics FMP regulations to include the following seabird conservation measures: (a) when fishing north of 23° N. lat., all deep-setting Hawaii longline vessels must either side-set, or use a tori line system plus the currently required measures (line shooter with weighted branch lines, blue-dyed thawed bait, and strategic offal discards), with the requirement to use strategic offal discards modified to require that vessel operators use them only when seabirds are present; and (b) all shallow-setting Hawaii longline vessels must either side-set, or use a tori line plus the currently required measures (night setting, blue dyed thawed bait, and strategic offal discards), wherever they fish, with the requirement to use strategic offal discards modified to require that vessel operators use them only when seabirds are present.

NMFS estimated that the Hawaii longline fleet hooked or entangled 2,320 albatrosses during 1999. In 2002 and 2003, when the shallow-set component of the Hawaii-based longline fishery was closed due to sea turtle bycatch, annual seabird interaction estimates fell to 113 and 257, respectively. Although the shallow-set longline fishery reopened in 2004, NMFS projects that under a restricted fishery and with this proposed rule the Hawaii longline fishing fleet will have approximately six (6) interactions per year with black-footed and Laysan albatrosses.

Classification

NMFS prepared an Environmental Impact Statement for this regulatory amendment. A Notice of Availability of the FEIS was published on 6 May 2005.

This proposed rule has been determined to be not significant for purposes of Executive Order 12866.

An IRFA was prepared that describes the economic impact that this proposed rule, if adopted, would have on small entities. A description of why the action is being considered, the objectives and legal basis for the action, and a description of the action, may be found at the beginning of this section. There are no recordkeeping or reporting requirements proposed in this rule.

This proposed rule does not duplicate, overlap, or conflict with any relevant Federal rules. All vessels are considered to be small entities. Therefore, there are no economic impacts resulting from disproportionality between large and small vessels. A summary of the analysis follows.

Number of Affected Small Entities

The proposed rule would potentially apply to all holders of Hawaii longline limited access permits. The number of Hawaii longline limited access permits is 164. Not all such permits are renewed each year (approximately 110 were renewed in 2003, and 122 in 2004), and of those renewed, not all are used to participate in the Hawaii-based longline fishery. In a few cases, multiple permits are held by a single business, so the number of businesses to whom the rule would apply is slightly smaller than the number of affected permit holders. All holders of Hawaii longline limited access permits are small entities (i.e., they are businesses that are independently owned and operated, and have no more than $3.5 million in annual receipts). Therefore, the number of entities to which the rule would potentially apply is approximately 164.

Duplicating, Overlapping, and Conflicting Federal Rules

To the extent practicable, it has been determined that there are no Federal rules that may duplicate, overlap, or conflict with the proposed rule.

Alternatives to the Proposed Rule

A total of 25 alternatives were considered. Each alternative would have applied one or more seabird deterrent strategies to the fishery sectors (deep- or shallow-setting) and by area (north of 23° N. lat., south of 23° N. lat., or all areas). Alternatives that would have applied deterrent measures to both fishery sectors in all areas were rejected as not being cost-effective, given that deep-setting vessels south of 23° N. lat. average just over one (1) seabird interaction per year. Alternatives that would have required the use of an underwater setting chute were rejected as untenable based on the fact that the hardware broke when used experimentally, and likely would not withstand the rigors of routine use aboard commercial fishing vessels.

Alternatives that would have required all shallow-setting vessels to side-set in one or more areas were rejected because (1) some smaller vessels may be unable to be reconfigured for side-setting, and (2) side-setting has been subject to limited experimental testing and, although it has been very promising for reducing seabird interactions, there has been no commercial testing and it is uncertain how well this technique will perform during routine use. NMFS and the WPFMC have determined that gradual implementation of side-setting would allow information collection and further consideration of the merits of this mitigation measure.

Effects of the Proposed Rule on Small Entities

The proposed rule is expected to have mixed impacts on small entities. Current seabird deterrent requirements for all vessels fishing north of 23° N. lat. will be modified to add a requirement to use a tori line system, as well as to require that strategic offal discards be used only when seabirds are present. Vessel operators may opt to side-set with no additional deterrents. Operators of vessels that can be easily reconfigured for side-setting may find that their operations are more efficient because (1) less bait will be taken by seabirds, thus potentially increasing fish catch rates, and (2) side-setting can improve the efficiency of fishing

operations because fishing crews do not have to move the fishing gear from one location on the vessel to another between sets. Whether or not these savings will be enough to offset the initial purchase and installation cost (approximately $4,000) and ongoing maintenance cost (estimated at $50/year) is unknown. Operators of vessels that cannot be easily reconfigured for side-setting will have to use a tori line (approximately $3,300 for purchase and installation, with annual maintenance costs estimated at $2,300/year, per line), in addition to the currently required measures.

To the extent that these measures increase fish catch rates by reducing bait loss, they will have a positive economic impact, but whether or not these savings will be enough to offset the costs of the measures is unknown. Under the proposed rule, vessels that shallow-set south of 23° N. lat. will also be subject to seabird deterrent measures. Operators of these vessels will have to use the same measures as those required when shallow setting north of 23° N. lat. Impacts on these operations are likely to be similar to those described above, but if side-setting is not feasible, vessel operators will have to invest in blue dye (estimated to cost $1,400/year), containers for offal discards (initial cost of $150), and tori lines ($3,300 installation plus $2,300 annual maintenance, per line). Again, it is not known if potential increases in catch rates due to reduced bait loss will be enough to offset the costs of these deterrent measures. However, given the already low number of seabird interactions, this seems unlikely. In addition, estimates of net revenue per vessel from a 2000 survey of the longline fishery indicate that net revenues ranged from a low of $18,208 for the average large tuna longline vessel to $385,776 for the average large swordfish longline vessel, with an average net return of $27,483 and $55,058 for all swordfish and tuna vessels, respectively. This would indicate that relative reductions in profitability from this proposed action based on size and target species may be disproportionately distributed among vessels in the Hawaii-based longline fleet. However, there is no indication that this proposed rule would lead to the cessation of operations of any vessel participating in this fishery.

Significant Alternatives to the Proposed Rule

There were several alternatives considered (2A through 7C in the regulatory amendment document) that would have allowed vessel owners to minimize their costs for complying with this action by giving them the opportunity to use the current seabird avoidance methods at no additional cost, or to change their avoidance procedures and procure additional equipment such as a tori line, side-setting equipment, or blue dye at costs described above. However, the continuation of the current seabird avoidance methods would not be consistent with the USFWS 2004 Biological Opinion. Although that Opinion concluded that the shallow-set longline fishery was not likely to jeopardize the continued existence of the short-tailed albatross, it contains measures directing NMFS to ''implement and monitor side-setting or another appropriate seabird deterrent or combination of deterrents that the USFWS [Service] agrees is at least as effective as side-setting in reducing the risks to the short-tailed albatross in the shallow-set Hawaii-based longline fishery.''

List of Subjects in 50 CFR Part 660

Administrative practice and procedure, American Samoa, Fisheries, Fishing, Guam, Hawaiian Natives, Indians, Northern Mariana Islands, and Reporting and recordkeeping requirements.

Dated: July 6, 2005.

Rebecca Lent,

Deputy Assistant Administrator for Regulatory Programs, National Marine Fisheries Service.

For the reasons set out in the preamble, 50 CFR 660 is proposed to be amended as follows:

PART 660—FISHERIES OFF WEST COAST STATES AND IN THE WESTERN PACIFIC

1. The authority citation for part 660 continues to read as follows:

Authority: 16 U.S.C. 1801 *et seq.*

2. In § 660.22, paragraphs (aa), (bb), (cc), and (mm) are removed; paragraphs (dd) though (ll) are redesignated as (aa) through (ii); paragraphs (nn) through (vv) are redesignated as paragraphs (jj) through (rr); and paragraph (z) is revised to read as follows:

§ 660.22 Prohibitions.

* * * * *

(z) Fail to fish in accordance with § 660.35(a)(1) or § 660.35(a)(2) when operating a vessel registered for use under a Hawaii longline limited access permit in violation of § 660.35(a).

* * * * *

3. In § 660.35, paragraphs (a) and (b)(10) are revised to read as follows:

§ 660.35 Pelagic longline seabird mitigation measures.

(a) *Seabird mitigation techniques.* When deep-setting or shallow-setting north of 23° N. lat. or shallow-setting south of 23° N. lat., owners and operators of vessels registered for use under a Hawaii longline limited access permit, must either side-set according to paragraph (a)(1) of this section, or fish in accordance with paragraph (a)(2) of this section.

(1) *Side-setting.* Vessels opting to side-set under this section must fish according to the following specifications:

(i) The mainline must be deployed at least 1 m (3.3 ft) forward from the stern corner of the vessel;

(ii) The mainline and branchlines are set from the port or the starboard side of the vessel;

(iii) If a mainline shooter is used, the mainline shooter must be mounted at least 1 m (3.3 ft) forward from the stern corner of the vessel;

(iv) Branchlines must have weights with a minimum weight of 60 g (2.1 oz);

(v) One weight must be connected to each branchline within 1 m (3.3 ft) of each hook;

(vi) When seabirds are present, the longline gear must be deployed so that baited hooks remain submerged and do not rise to the sea surface; and

(vii) A bird curtain must be deployed. Each bird curtain must consist of the following three components: a pole that is fixed to the side of the vessel aft of the line shooter and which is at least 3 m (9.8 ft) long; at least three main streamers that are attached at regular intervals to the upper 2 m (6.6 ft) of the pole and each of which has a minimum diameter of 20 mm (0.8 in); and branch streamers attached to each main streamer at the end opposite from the pole, each of which is long enough to drag on the sea surface in the absence of wind, and each of which has a minimum diameter 10 mm (0.4 in).

(2) *Alternative to side-setting.* Vessels that do not side-set must:

(i) Discharge fish, fish parts (offal), or spent bait while setting or hauling longline gear, on the opposite side of the vessel from where the longline gear is being set or hauled, when seabirds are present;

(ii) Retain sufficient quantities of fish, fish parts, or spent bait, between the setting of longline gear for the purpose of strategically discharging it in accordance with paragraph (i) of this section;

(iii) Remove all hooks from fish, fish parts, or spent bait prior to its discharge in accordance with paragraph (i) of this section;

(iv) Remove the bill and liver of any swordfish that is caught, sever its head from the trunk and cut it in half vertically and periodically discharge the butchered heads and livers in accordance with paragraph (i) of this section;

(v) Employ a tori line system, prior to the first hook being set, that meets the following requirements:

(A) The tori line must be at least 150 m (492 ft) long for shallow-setting vessels and 75 m (246 ft) long for deep-setting vessels, and is composed of an aerial portion attached to a submerged portion. For a shallow-setting vessel, the aerial portion must extend at least 80 m (262 ft) behind the stern of the vessel, and the submerged portion must extend at least 70 m (230 ft). For a deep-setting vessel, the aerial portion must extend at least 40 m (131 ft), and the submerged portion must extend at least 35 m (115 ft);

(B) The aerial portion of the line must be composed of a line 3–6 mm (0.12–0.24 in) in diameter, and the submerged portion of the line shall be composed of twisted polypropylene or rope that is at least 5 mm (0.20) in diameter;

(C) The tori line must be fixed to a pole or vessel structure that allows the position of the line to be adjusted to achieve the requirements for aerial and submerged lengths and coverage over the area where the baited hooks are at or near the sea surface; and

(D) At least three pairs of streamers must be attached to the aerial portion of the line at regular intervals, beginning no closer than 5 m (16.4 ft) to the tori pole or vessel structure. Each pair of streamers must be fixed to a single point on the line. Each streamer must be brightly colored and made of UV-protected plastic tubing or a minimum of 10 mm (0.4 in) polyester line or material of equivalent density. Each streamer must be long enough to drag on the sea surface in the absence of wind.

(vi) When using basket-style longline gear north of 23° N. lat., ensure that the main longline is deployed slack to maximize its sink rate; and

(vii) Use completely thawed bait that has been dyed blue to an intensity level specified by a color quality control card issued by NMFS; and

(viii) Maintain a minimum of two cans (each sold as 0.45 kg or 1 lb size) containing blue dye on board the vessel; and

(ix) Follow the requirements in paragraphs (a)(3) and (a)(4) of this section, as applicable.

(3) *Deep-setting requirements.* The following additional requirements apply to vessels engaged in deep-setting using a monofilament main longline north of 23° N. lat. that do not side-set. Owners and operators of these vessels must:

(i) Employ a line shooter; and

(ii) Attach a weight of at least 45 g (1.6 oz) to each branchline within 1 m (3.3 ft) of the hook.

(4) *Shallow-setting requirement.* In addition to the requirements set forth in paragraphs (a)(1) and (a)(2) of this section, vessels engaged in shallow-setting that do not side-set must begin the deployment of longline gear at least 1 hour after local sunset and complete the deployment no later than local sunrise, using only the minimum vessel lights necessary for safety.

(b) * * *

(10) Any seabird that is released, in accordance with paragraph (b)(9) of this section or under the guidance of a veterinarian, must be placed on the sea surface.

* * * * *

[FR Doc. 05–13691 Filed 7–12–05; 8:45 am]

BILLING CODE 3510–22–S

DEPARTMENT OF COMMERCE

National Oceanic and Atmospheric Administration

50 CFR Part 660

[Docket No. 050701176–5176–01; I.D. 062405B]

RIN 0648–AT47

Fisheries off West Coast States and in the Western Pacific; Western Pacific Bottomfish Fisheries; Main Hawaiian Islands; Control Date

AGENCY: National Marine Fisheries Service (NMFS), National Oceanic and Atmospheric Administration (NOAA), Commerce.

ACTION: Proposed rule; advance notice of proposed rulemaking; establishment of a control date; request for comments.

SUMMARY: NMFS announces that persons who enter the bottomfish fishery in the U.S. exclusive economic zone (EEZ) around the main Hawaiian Islands (MHI) after June 2, 2005, (''control date'') are not guaranteed future participation in the fishery if the Western Pacific Fishery Management Council (Council) prepares and NMFS approves a program limiting entry or effort. This action does not commit the Council or NMFS to limit entry, or prevent any other date from being selected for eligibility to participate in the MHI bottomfish fishery. The Council or NMFS may also use other criteria to limit fishing effort or participation in a limited entry program that is developed in the future.

DATES: Comments must be submitted in writing by August 12, 2005.

ADDRESSES: You may submit comments identified by I.D. 062405B by any of the following methods:

- E-mail: *AT47@NOAA.gov*. Include in the subject line of the e-mail comment the following document identifier: MHI bottomfish control date. Comments sent via e-mail, including all attachments, must not exceed a 10 megabyte file size.
- Federal e-Rulemaking portal: *http://www.regulations.gov*. Follow the instructions for submitting comments.
- Mail: William L. Robinson, Administrator, NMFS, Pacific Islands Region (PIR), 1601 Kapiolani Blvd., Suite 1110, Honolulu, HI 96814.
- Fax: 808–973–2941

FOR FURTHER INFORMATION CONTACT: Walter Ikehara, PIR, at 808–973–2937.

SUPPLEMENTARY INFORMATION: On June 2, 2005, the Council adopted a ''control date'' of June 2, 2005, applicable to persons intending to participate in the fishery (commercial and non-commercial)for bottomfish multi-species stock complex (bottomfish complex) operating in the U.S. EEZ around the MHI. The purpose of this action is to notify fishermen, who may be interested in participating in the fishery, that if they enter this fishery after June 2, 2005, they may not be assured of future access if the Council and/or NMFS decide to limit new entry or limit effort in the fishery. Neither the Council nor NMFS have yet decided whether to limit new entry to this fishery or how new entry might be limited.

Establishment of a control date responds to NMFS' notification to the Council on May 27, 2005,(70 FR 34452, June 14, 2005)that overfishing is occurring in the bottomfish complex around the Hawaiian Archipelago and that management action must be taken by the Council to end this overfishing condition. Since this condition primarily occurs in the MHI, the Council tentatively determined that a limited entry permit program might be utilized to end overfishing in this fishery.

At present, 3,736 fishing vessels are registered for use with State of Hawaii bottomfish permits (commercial and non-commercial), of which 2,101 (56 percent) are classified as commercial fishing vessels. This represents an estimate of fishermen who could be affected by the control date. The MHI bottomfish fishing grounds are located predominantly in State waters (about 80 percent based on the 100–fm contour); however, it is estimated that about 65 percent of the bottomfish fishing trips

take place in Federal EEZ waters, based on State of Hawaii 2003 commercial fishing data. Also, approximately 69 percent of the commercial bottomfish landings come from Federal waters. Estimates of recreational catch and effort are unavailable.

Control dates are intended to discourage speculative entry into fisheries, as new entrants entering the fishery after the control date are forewarned that they are not guaranteed future participation in the fishery.

This control date does not commit the Council or NMFS to any particular management regime or criteria for entry into the MHI bottomfish fishery. Fishermen are not guaranteed future participation in this fishery, regardless of their level of participation before or after the control date. The Council may choose a different control date or it may choose a management regime that does not involve a control date. Other criteria, such as documentation of commercial landings and sales, may be used to determine eligibility for participation in a limited access fishery. The Council also may choose to take no further action to control entry or access to the fishery, in which case the control date may be rescinded.

This advance notice of proposed rulemaking has been determined to be not significant for the purposes of Executive Order 12866.

Authority: 16 U.S.C. 1801 *et seq.*

Dated: July 7 2005.

Rebecca Lent,

Deputy Assistant Administrator for Regulatory Programs, National Marine Fisheries Service.

[FR Doc. 05–13796 Filed 7–12–05; 8:45 am]

BILLING CODE 3510–22–S

Notices

Federal Register

Vol. 70, No. 133

Wednesday, July 13, 2005

This section of the FEDERAL REGISTER contains documents other than rules or proposed rules that are applicable to the public. Notices of hearings and investigations, committee meetings, agency decisions and rulings, delegations of authority, filing of petitions and applications and agency statements of organization and functions are examples of documents appearing in this section.

DEPARTMENT OF AGRICULTURE

Submission for OMB Review; Comment Request

July 7, 2005.

The Department of Agriculture has submitted the following information collection requirement(s) to OMB for review and clearance under the Paperwork Reduction Act of 1995, Public Law 104–13. Comments regarding (a) whether the collection of information is necessary for the proper performance of the functions of the agency, including whether the information will have practical utility; (b) the accuracy of the agency's estimate of burden including the validity of the methodology and assumptions used; (c) ways to enhance the quality, utility and clarity of the information to be collected; (d) ways to minimize the burden of the collection of information on those who are to respond, including through the use of appropriate automated, electronic, mechanical, or other technological collection techniques or other forms of information technology should be addressed to: Desk Officer for Agriculture, Office of Information and Regulatory Affairs, Office of Management and Budget (OMB), *OIRA_Submission@OMB.EOP.GOV* or fax (202) 395–5806 and to Departmental Clearance Office, USDA, OCIO, Mail Stop 7602, Washington, DC 20250–7602. Comments regarding these information collections are best assured of having their full effect if received within 30 days of this notification. Copies of the submission(s) may be obtained by calling (202) 720–8958.

An agency may not conduct or sponsor a collection of information unless the collection of information displays a currently valid OMB control number and the agency informs potential persons who are to respond to the collection of information that such persons are not required to respond to the collection of information unless it displays a currently valid OMB control number.

Economic Research Service

Title: Food Security Supplement to the Current Population Survey.

OMB Control Number: 0536–0043.

Summary of Collection: The Food Security Supplement is sponsored by the Economic Research Service (ERS) as a research and evaluation activity authorized under Section 17 of the Food Stamp Act of 1977. ERS is collaborating with the Food and Nutrition Service (FNS) and the Bureau of Census to continue this program of research and development. The Food Stamp Program (FSP) is currently the primary source of nutrition assistance for low-income Americans enabling households to improve their diet by increasing their food purchasing power. As the nation's primary public program for ensuring food security and alleviating hunger, USDA needs to regularly monitor these conditions among its target population. This need requires that USDA continue basic data collection, analysis, and evaluation.

Need and Use of the Information: ERS will collect information from the Current Population Survey Food Security Supplement to routinely obtain data from a large, representative national sample in order to develop a measure that can be used to track the prevalence of food insecurity and hunger within the U.S. population, as a whole, and in selected population subgroups, and to continue development and improvement of methods for measuring these conditions. The data collected will partially fulfill the requirements of the Congressionally mandated 10-Year Plan for the National Nutrition Monitoring and Related Research Program.

Description of Respondents: Individuals or Households.

Number of Respondents: 56,200.

Frequency of Responses: Reporting: On occasion.

Total Burden Hours: 7,155.

Ruth Brown,

Departmental Information Collection Clearance Officer.

[FR Doc. 05–13718 Filed 7–12–05; 8:45 am]

BILLING CODE 3410–18–P

DEPARTMENT OF AGRICULTURE

Farm Service Agency

Alaska Dairy Fund

AGENCY: Farm Service Agency, USDA.

ACTION: Notice of Funds Availability (NOFA).

SUMMARY: This Notice announces the availability of funds to be applied to accounts of Alaska dairy farmers. As provided by the Emergency Supplemental Appropriations Act for Defense, the Global War on Terror, and Tsunami Relief, 2005 (2005 Emergency Supplemental Act) (Pub. L. 109–13) $1 million made available by section 786 of the Agriculture, Rural Development, Food and Drug Administration and Related Agencies Appropriations (2005 Appropriations Act)(Pub. L. 108–447) may be applied to accounts of Alaska dairy farmers owed to the Secretary.

FOR FURTHER INFORMATION CONTACT: Michael Cumpton, Senior Loan Officer, USDA/FSA/DAFLP/STOP 0523, 1400 Independence Avenue, SW., Washington, DC 20250–0523; telephone (202) 690–4014; facsimile (202) 690–0949; electronic mail: *mike.cumpton@wdc.usda.gov.*

SUPPLEMENTARY INFORMATION:

General Information

Section 751 of the Agriculture, Rural Development, Food and Drug Administration and Related Agencies Appropriation Act, 2003 (Pub. L. 108–7), enacted February 20, 2003, authorized loans and grants to expand the State of Alaska's dairy industry and related milk processing and packaging facilities in Fiscal Years 2003 through 2007. Section 786 of the 2005 Appropriations Act enacted December 8, 2004, appropriated $1 million for that purpose. Section 5104 of the 2005 Emergency Supplemental Act enacted May 11, 2005, authorized the Agency to apply those funds to the accounts of Alaska dairy farmers owed to the Secretary of Agriculture.

This notice announces that the Farm Service Agency (FSA) is making $1 million available to established dairy farms in Alaska currently indebted on FSA Farm Loan Programs (FLP) loans that have been in continuous commercial milk production for at least the last three full calendar years and continued to produce milk to sell

commercially on May 11, 2005 (the date of enactment of the authorizing legislation). The funds will be distributed pro rata based on the total production of each operation over the last three calendar years.

These funds will be applied to eligible borrower accounts without execution of additional debt or security instruments.

I. Definitions

Agency or FSA is the Farm Service Agency, its employees, and any successor agency.

Entity is a corporation, partnership, joint operation, trust, limited liability company, or cooperative.

Eligible farmer is an individual or entity who is an established dairy farmer in the State of Alaska and is indebted to the Secretary of Agriculture through the Farm Loan Programs of the Farm Service Agency.

Established dairy farmer is an individual or entity who has been continuously producing and selling milk commercially for three or more calendar years (including 2002–2004) and continued to produce milk to sell commercially on May 11, 2005.

II. Eligibility Requirement

Recipients must be eligible farmers as defined above.

III. Notification of Eligible Farmers

(a) Within 10 days after publication of this notice, the Agency will request, by first class mail, and in person or by phone, that eligible farmers execute:

(1) A consent to the release of information (unless the Agency already has such a consent) for the Agency to obtain from commercial milk buyers the eligible farmer's production for the past three full calendar years (2002, 2003, and 2004), and

(2) The Alaska Dairy Fund Certification (ADFC), contained in Exhibit 1 of this notice, certifying that they:

(i) Meet the definition of an established dairy farmer;

(ii) Agree to accept the funds; and

(iii) Are aware of possible future tax consequences of accepting the funds.

(b) Eligible farmers who do not execute and deliver to FSA the consent (unless there is already a release on file) and the ADFC within 30 days of notification by the Agency will not be included in the calculations or distribution of funds.

IV. Distribution of Funds

Funds will be distributed among eligible farmers based on their proportion of total milk production sold commercially by all eligible farmers during the three full calendar years 2002, 2003, and 2004. Payments will be limited to the amount of the borrower's FLP debt.

The following example, using three farms, illustrates the payment calculation process:

Example:

Total Three Year Production:	
Eligible Farmer #1	150,000
Eligible Farmer #2	90,000
Eligible Farmer #3	40,000
Total Production	280,000
Percentage of Total Production:	
Eligible Farmer #1	150,000 / 280,000 = 53.57%
Eligible Farmer #2	90,000 / 280,000 = 32.14%
Eligible Farmer #3	40,000 / 280,000 = 14.29%
	100%
Payment:	
Eligible Farmer #1	53.57% × 1,000,000 = $535,700
Eligible Farmer #2	32.14% × 1,000,000 = $321,400
Eligible Farmer #3	14.29% × 1,000,000 = $142,900
	$1,000,000

If the calculations show that a farmer's payment would be greater than the farmer's FLP debt, the payment will be set equal to the debt and the excess entered into new calculations as shown above, but excluding that farmer, to be distributed among the remaining eligible farmers.

V. Processing and Application of Funds

(a) When all production amounts have been obtained, the State Executive Director (SED), Alaska, with concurrence of the Deputy Administrator for Farm Loan Programs, will make the calculations required by this Notice. Exhibit 2 will then be used to notify the borrowers of:

(i) Their total production reported to the Agency;

(ii) The total projected amount that they are to receive;

(iii) That 80 percent of the total projected amount they are to receive will be applied to their accounts immediately; and

(iv) Their right to appeal to the National Appeals Division, USDA.

(b) After the exhaustion of all appeal rights, the State Executive Director (SED), Alaska, with concurrence of the Deputy Administrator for Farm Loan Programs, will make any additional calculations required and notify the eligible farmer and the Agency's Finance Office of the remaining amount that will be applied to their account.

(c) The Agency's Finance Office will apply the funds first to any eligible farmer's FSA FLP delinquency and then as extra payments according to 7 CFR part 1951, subpart A.

(d) The record of SED calculations will be retained and filed in the State Office.

Paperwork Reduction Act

A request for clearance of the information collections associated with this notice has not been submitted to the Office of Management and Budget (OMB) under 5 CFR 1320.3(c) because the collection of information required for the disbursal of the funds will affect less than ten persons.

Environmental Compliance

The environmental impacts of this notice have been considered in accordance with the provisions of the National Environmental Policy Act of 1969 (NEPA), 42 U.S.C. 4321 et seq., the regulations of the Council on Environmental Quality (40 CFR parts 1500–1508), and the FSA regulations for compliance with NEPA, 7 CFR parts 799, and 1940, subpart G. FSA completed an environmental evaluation

and concluded the notice requires no further environmental review as funds will be applied against existing debt and no additional funds are being advanced for production or expansion. No extraordinary circumstances or other unforeseeable factors exist which would require preparation of an environmental assessment or environmental impact statement. A copy of the environmental evaluation is available for inspection and review upon request.

Signed at Washington, DC, on June 30, 2005.

James R. Little,

Administrator, Farm Service Agency.

Exhibit 1—Alaska Dairy Fund Certification

I _____ hereby certify that I (or my entity which I have the authority to represent) meet the definition of an eligible farmer, as shown below, and will accept proceeds made available by the Emergency Supplemental Appropriations Act for Defense, the Global War on Terror, and Tsunami Relief, 2005, according to FSA calculations up to the total amount of my FSA Farm Loan Programs debt:

Definitions:

Eligible farmer is an individual or entity who is an established dairy farmer in the State of Alaska and is indebted to the Secretary of Agriculture through the Farm Loan Programs of the Farm Service Agency.

Established dairy farmer is an individual or entity who has been continuously producing and selling milk commercially for three or more full calendar years (including 2002–2004) and continued to produce milk to sell commercially on May 11, 2005.

I further certify that I am aware that there could be tax consequences if I accept these funds and may consult a tax professional or the IRS if I have any questions regarding these consequences.

_____

Signature

_____

Signature

Exhibit 2—Notification of 2005 Alaska Dairy Fund Production Records

Dear (Borrower's Name): Pursuant to Section 5104 of the Emergency Supplemental Appropriations Act for Defense, the Global War on Terror, and Tsunami Relief, 2005 (Pub. L. 109–13), and the Notice of Funding Availability implementing that law, the Farm Service Agency has determined the distribution of funds from the Alaska Dairy Fund.

All records available to the FSA indicate that your milk production sold commercially from January 1, 2002 to December 31, 2004 was _____. Using this as a basis for calculation, your share of the 2005 Alaska Dairy fund would be approximately $_____. This is an estimated projection only. Any correction in the production amounts used for receipt of these funds could change this amount. Therefore, at this time, 80 percent of this amount, or $_____, will immediately be applied to your FSA Farm Loan Program account.

You have 30 days from receipt of this notice to appeal if you believe that FSA's decision is incorrect. Information on how to appeal is included with this notification. At the conclusion of the appeal period for all eligible farmers, the remaining balance, as calculated by FSA, will be applied to your account.

Funds first will be applied toward any FLP delinquency and then as an extra payment on your account. Please consult with your FSA Office regarding any changes to your future payment schedule.

If you have any questions, please contact the Alaska State FSA Office at (907)761–7738.

_____

Sincerely,

State Executive Director
Alaska Farm Service Agency

[FR Doc. 05–13751 Filed 7–12–05; 8:45 am]

BILLING CODE 3410–05–P

DEPARTMENT OF AGRICULTURE

Forest Service

Madera County Resource Advisory Committee

AGENCY: Forest Service, USDA.

ACTION: Notice of Resource Advisory Committee Meeting.

SUMMARY: Pursuant to the authorities in the Federal Advisory Committee Act of 1972 (Pub. L. 92–463) and under the secure Rural Schools and Community Self-Determination Act of 2000 (Pub. L. 106–393) the Sierra National Forest's Resource Advisory Committee for Madera County will meet on Monday, July 18, 2005. The Madera Resource Advisory Committee will meet at the Bass Lake Ranger District Office, North Fork, CA, 93643. The purpose of the meeting is: review the procedures for accepting FY 2005 RAC proposals and the draft public announcement for a call for project proposals on the Sierra National Forest.

DATES: The Madera Resource Advisory Committee meeting will be held Monday, July 18th, 2005. The meeting will be held from 7 p.m. to 9 p.m.

ADDRESSES: The Madera County RAC meeting will be held at the Bass Lake Ranger District Office, 57003 Road 225, North Fork, CA 93643.

FOR FURTHER INFORMATION CONTACT: Dave Martin, U.S.D.A., Sierra National Forest, Bass Lake Ranger District, 57003 Road 225, North Fork, CA, 93643 (559) 877–2218 ext. 3100; e-mail: *dmartin05@fs.fed.us*.

SUPPLEMENTARY INFORMATION: Agenda items to be covered include: (1) Review of procedures for accepting FY 2005 RAC proposals; (2) draft public announcement.

Dated: July 7, 2005.

David Martin,

District Ranger, Bass Lake Ranger District, Sierra National Forest.

[FR Doc. 05–13735 Filed 7–12–05; 8:45 am]

BILLING CODE 3410–11–M

DEPARTMENT OF AGRICULTURE

Natural Resources Conservation Service

Big Cedar Creek Watershed, Floyd and Polk County, GA

AGENCY: Natural Resources Conservation Service.

ACTION: Notice of a finding of no significant impact.

SUMMARY: Pursuant to Section 102(2)(c) of the National Environmental Policy Act of 1969, the Council on Environmental Quality Regulations (40 CFR part 1500); and the Natural Resources Conservation Service Regulations (7 CFR part 650); the Natural Resources Conservation Service, U.S. Department of Agriculture, gives notice that an environmental impact statement is not being prepared for the Big Cedar Creek Watershed Floyd and Polk County, Georgia.

FOR FURTHER INFORMATION CONTACT: Cran Upshaw, Economist, Natural Resources Conservation Service, Federal Building, 355 East Hancock Avenue, Athens, Georgia 30601, Telephone (706) 546–2277, E-Mail *cran.upshaw@ga.usda.gov*.

SUPPLEMENTARY INFORMATION: The Environmental Assessment of this federally assisted action indicates that the project will not cause significant local, regional, or national impacts on the environment. As a result of these findings, James E. Tillman Sr., State Conservationist, has determined that the preparation and review of an environmental impact statement is not needed for this project.

The project purpose is continued flood prevention. The planned works include measures for the control of agricultural animal waste related pollution.

The Notice of a Finding of No Significant Impact [FONSI] has been forwarded to the U.S. Environmental Protection Agency and to various Federal, State, and local agencies and interest parties. A limited number of the FONSI are available to fill single copy requests at the above address. Basic data developed during the environmental assessment are on file and may be

reviewed by contacting Cran Upshaw at the above number.

No administrative action on implementation of the proposal will be taken until 30 days after the date of this publication in the **Federal Register**.

James E. Tillman, Sr.,

State Conservationist.

(This activity is listed in the Catalog of Federal Domestic Assistance under 10.904, Watershed Protection and Flood Prevention, and is subject to the provisions of Executive Order 12372, which requires inter-government consultation with State and local officials).

Finding of No significant Impact for Big Cedar Creek Watershed, Floyd and Polk Counties, GA, July 2005

Introduction

The Big Cedar Creek Watershed is a federally assisted action authorized for planning under Public Law 83–566, the Watershed Protection and Flood Prevention Act. An environmental assessment was undertaken in conjunction with the development of the revised watershed plan. This assessment was conducted in consultation with local, State, and Federal agencies as well as with interested organizations and individuals. Data developed during the assessment are available for public review at the following location:

U.S. Department of Agriculture, Natural Resources Conservation Service, 355 East Hancock Avenue, Athens, Georgia 30601.

Recommended Action

This document describes a revised plan for Watershed Protection and improvement of water quality and includes measures for the control of agricultural animal waste related pollution. The revised plan reduces excessive animal waste and associated nutrients and bacteria entering waterways from about 37 beef and 4 dairy operations. The plan also provides measures to reduce nutrient runoff and improve forage quality on 1,700 acres of pastureland. This will be accomplished by providing financial and technical assistance through a local sponsor.

The principal project measures are to:

1. Develop and install approximately 41 animal waste management systems covering 1,700 acres of pastureland and adjoining stream banks which will include all or parts of the following: fencing, cross fencing with gates, alternative livestock water supply with piping and troughs, stream crossings, filter strips, and heavy use protection areas on 37 beef and 4 dairy operations to control and utilize manure. Conservation management with nutrient and grazing land management practices will be used when applying animal waste.

2. The measures will be planned and installed by developing long-term contracts with landowners.

Effects of Recommended Action

Installation of animal waste management measures and grazing land practices will reduce offsite nutrient, bacteria, sediment and chemical damages and increase utilization of nutrients onsite. The results will be a significant reduction in current impairments to the area's water quality, biological habitats, recreational opportunities and improvement of long-term productivity and quality of pastureland in the watershed. Installation of the selected plan will also provide local and regional employment, promote rural economic development in the drainage area, and assist local land users in complying with the conservation provision of the Food Security Act of 1985.

The project measures will reduce agricultural related nutrients, bacteria and sediment entering watershed streams, the Big Cedar Creek embayment of Weiss Lake in Alabama and also minimize the impact on surface and ground water quality by:

—Reducing the 53 tons of nitrogen and 11 tons of phosphorus from animal waste delivered annually by an average of 42%.

—Providing a significant reduction in the amount of fecal coliform and sediment delivered annually to area waterways, thus improving biological habitats, recreational opportunities, and real estate values.

Grazing land practices will increase forage productivity through improved management and utilizing waste more efficiently. This will reduce stream enrichment and conserve the nutrients for plant production. The proposed plan will also encourage and promote the agricultural enterprises in the watershed through improved efficiency.

Wildlife habitat will not be disturbed during installation of animal waste systems and grazing land practices. No wetlands, wildlife habitat, fisheries, prime farmland, or cultural resources will be destroyed or threatened by this project. Conversions to permanent vegetation will provide a more diverse upland game habitat. The value of woodland habitat will not decline. Fishery habitats will also be maintained.

No endangered or threatened plant or animal species will be adversely affected by the project.

There are no wilderness areas in the watershed.

Scenic values will be complemented with improved riparian quality and cover conditions resulting from the installation of conservation animal waste management system and grazing land practices.

Alternatives

Three alternative plans, that included 49 combinations of systems and practices, were considered in project planning. No significant adverse environmental impacts are anticipated from installation of the selected alternative. Also, the planned action is the most practical and cost effective means of protecting the watershed by managing animal waste and stabilizing pasture land.

Consultation—Public Participation

Water quality concerns in the Big Cedar Creek Watershed were expressed by local citizens, Coosa River Soil and Water Conservation District, other regional residents. NRCS personnel in partnership with interagency team members from the U.S. Fish and Wildlife Service (F&WS), Georgia Department of Natural Resources (DNR) and Environmental Protection Division (EPD), the Georgia Cooperative Extension Service (CES) made a watershed assessment and evaluated existing water quality data. The team determined that agricultural related water quality problems were negatively effecting the watershed and the region's air, plant, animal, soil, and water resources. With these concerns identified, the team agreed that a watershed approach to provide assistance to operators would help solve the problems.

The Sponsors requested NRCS planning assistance under PL–566 authority for a revised plan. Requests were also made to other USDA agencies to assist in reducing the growing water quality problems. The Georgia Cooperative Extension Service (CES) has been asked to assist in developing nutrient and pesticide management plans.

At the initiation of the planning process, meetings were held with key farmers and District representatives from the watershed area to discuss problem identification, conservation systems and PL–566 requirements. A public meeting was held in April 4, 2003 to scope the problems and concerns and to explain impacts of the PL–566 program initiatives relative to a watershed project and discuss possible solutions.

In order to further publicize this planning effort, a public announcement was made to State and Federal agencies by letter and to local landowners through local newspapers to announce the change in project purpose.

NRCS scheduled an interdisciplinary, interagency team to work with the Sponsor, landowners, and other interested groups. The team was compiled of specialists from F&WS, EPD, CES, and DNR, along with local operators. The team worked in the watershed area and downstream to Harris Reservoir, to gain insight to the magnitude of the problems and possible solutions. Several meetings, group discussions, and interviews were held with local planners, individuals, government officials and other technical experts. Evaluations and alternative solutions were developed with the Sponsor and other officials. The Recommended Plan was agreed upon.

Another public meeting was on March 30, 2004. The results of surveys, studies, field investigations and the Alternatives Plans were presented to the public. The Selected Plan was agreed upon by those in attendance.

In early 2003, representatives of the NRCS, F&WS, DNR, EPD, and CES made a field inspection to determine the quality and quantity of resources that would be impacted by selected practices and to consider possible mitigation measures. It was the consensus of the group that an Environmental Impact Statement (EIS) was not needed for this project. This agreement was based on the type of practices and systems planned and that each would be installed on previously disturbed land. With this consensus, an Environmental Assessment (EA) was prepared accordingly.

Upon review of the Big Cedar Creek Watershed Plan-EA, this Finding of No Significant Impact (FONSI) was prepared. These documents are being distributed to all concerned agencies, groups, and interested individuals. A Notice of Availability of the FONSI is being published in the **Federal Register**. Agency consolations and public participation to date has shown no conflicts with the implementation of the selected plan.

Conclusion

The Environmental Assessment summarized above indicates that this Federal action will not cause significant adverse local, regional, or national impacts on the environment. Therefore, based on the above findings, I have determined that an environmental impact statement for the recommended Big Cedar Creek Revised Watershed Plan is not required.

Dated: June 28, 2005.

James E. Tillman Sr.,

State Conservationist.

[FR Doc. 05–13716 Filed 7–12–05; 8:45 am]

BILLING CODE 3410–16–P

DEPARTMENT OF AGRICULTURE

Natural Resources Conservation Service

Caballo Arroyos Site 4 (Wardy-Hedgecock Dam), Doña Ana County, NM

AGENCY: Natural Resources Conservation Service.

ACTION: Notice of a finding of no significant impact.

SUMMARY: Pursuant to section 102(2)(c) of the National Environmental Policy Act of 1969; the Council on Environmental Quality Regulations (40 CFR Part 1500); and the Natural Resources Conservation Service Rules (7 CFR Part 650); the Natural Resources Conservation Service, U.S. Department of Agriculture, gives notice that an environmental impact statement is not being prepared for the rehabilitation of Caballo Arroyos Site 4 (Wardy-Hedgecock Dam) in Doña Ana County, New Mexico.

FOR FURTHER INFORMATION CONTACT: Rosendo Treviño III; State Conservationist; Natural Resources Conservation Service; 6200 Jefferson, NE.; Albuquerque, NM 87109–3734; telephone 505–761–4400.

SUPPLEMENTARY INFORMATION: The environmental assessment (EA) of this federally assisted action indicates that the project will not cause significant local, regional, or national effects on the human environment. As a result of these findings, Rosendo Treviño III, State Conservationist, has determined that the preparation and review of an environmental impact statement are not needed for this project.

The project purpose is flood damage reduction. The action includes the rehabilitation of a floodwater retarding dam. The Notice of a Finding of No Significant Impact (FNSI) has been forwarded to the Environmental Protection Agency; various Federal, state, and local agencies; and interested parties. A limited number of copies of the FNSI are available to fill single copy requests at the above address. Basic data developed during the EA are on file and may be reviewed by contacting Rosendo Treviño III. No administrative action on implementation of the proposed action will be taken until 30 days after the date of this publication in the **Federal Register**.

John Gleim,

Acting State Conservationist.

[FR Doc. 05–13717 Filed 7–12–05; 8:45 am]

BILLING CODE 3410–16–P

DEPARTMENT OF AGRICULTURE

Rural Business-Cooperative Service

Request for Proposals: Fiscal Year 2005 Funding Opportunity for 1890 Land Grant Institutions Rural Entrepreneurial Program Outreach Initiative

AGENCY: Rural Business-Cooperative Service, USDA.

ACTION: Initial notice.

SUMMARY: The Rural Business-Cooperative Service (RBS) announces the availability of a yet undetermined amount of funding in competitive cooperative agreement funds allocated from USDA Rural Development's fiscal year (FY) 2005 salaries and expense budget. A separate notice will be published when the funding level has been determined. RBS hereby requests proposals from 1890 Land Grant Universities and Tuskegee University (1890 Institutions) for competitively awarded cooperative agreements for projects that support USDA Rural Development's goals and objectives of providing technical assistance for business creation in economically challenged rural communities, for educational programs to develop and improve upon the professional skills of rural entrepreneurs, and for outreach and promotion of USDA Rural Development's programs in small rural communities with the greatest economic need. Project proposals must be designed to overcome currently identified economic problems and lead to sustainable economic development. Project proposals that address both traditional and nontraditional business enterprises are encouraged. This initiative seeks to create a working partnership between USDA Rural Development and the 1890 Institutions through cooperative agreements. A cooperative agreement requires substantial involvement of the government agency in carrying out the objectives of the project.

Cooperative agreements will be awarded to the project proposals receiving the highest scores as determined by a peer review panel of USDA employees knowledgeable of the subject matter. Awards will be made to

the extent that funds are available; however, USDA Rural Development is making no commitment to fund any particular project proposal or to make a specific number of awards. Eligible applicants must provide matching funds equal to at least 25 percent of the total project costs.

This Notice sets forth the information required lists the information needed to submit an application for these funds.

DATES: Applications must be submitted by 4 p.m., eastern time on August 29, 2005. Proposals received after 4 p.m. eastern time on August 29, 2005, will not be considered for funding.

ADDRESSES: You may obtain application guides and materials for the 1890 Land Grant Institutions Rural Entrepreneurial Outreach and Development Initiative at the following Internet Address: *http://www.rurdev.usda.gov/rbs/oa/1890.htm* or by contacting Mr. Edgar L. Lewis, Program Manager, Rural Business-Cooperative Service, USDA, Mail Stop 3252, 1400 Independence Avenue SW., Washington, DC 20250–3252. Telephone: (202) 690–3407, E-mail: *edgar.lewis@usda.gov.*

Final paper applications for an 1890 Land Grant Institutions Rural Entrepreneurial Program Outreach Initiative cooperative agreement may be submitted via the Postal Service to Cooperative Programs, Attention: 1890 Land Grant Institutions Rural Entrepreneurial Program Outreach Initiative Program, USDA, Mail Stop 3250, 1400 Independence Ave., SW., Washington, DC 20250, or UPS, Federal Express, or similar delivery service to Cooperative Programs, Attention: 1890 Land Grant Institutions' Rural Entrepreneurial Program Outreach Initiative Program, USDA Room 4016, 1400 Independence Ave., SW., Washington, DC 20250. The phone number that should be used for FedEX or similar packages is (202) 720–7558.

Submit electronic cooperative agreement applications using the Grants.gov Web site at *http://www.grants.gov.*

FOR FURTHER INFORMATION CONTACT: Mr. Edgar L. Lewis, Program Manager, Rural Business-Cooperative Service, USDA, Stop 3252, Room 4221, 1400 Independence Avenue SW., Washington, DC 20250–3252. Telephone:(202) 690–3407, E-mail: *edgar.lewis@usda.gov,* or visit the program Web site at *http://www.rurdev.usda.gov/rbs/oa/1890.htm.*

SUPPLEMENTARY INFORMATION:

Overview

Federal Agency: Rural Business-Cooperative Service (RBS).

Funding Opportunity Title: 1890 Land Grant Institutions Rural Entrepreneurial Outreach and Development Initiative.

Announcement Type: Initial Announcement.

Catalog of Federal Domestic Assistance (CFDA) Number: 10.856.

Key Dates: Cooperative agreement applications must be received by 4 p.m. eastern time, August 29, 2005. Proposals received after 4 p.m., August 29, 2005, will not be considered for funding.

I. Funding Opportunity Description

This solicitation is issued pursuant to 7 U.S.C. 2204b(b)(4) and Executive Order 13256 (February 12, 2002), ''President's Board of Advisors on Historically Black Colleges and Universities.''

Several other Federal statutes and regulations apply to project proposals considered for review and to cooperative agreements awarded. These include, but are not limited to:

7 CFR part 15, subpart A—Nondiscrimination in Federally Assisted Programs of the Department of Agriculture—Effectuation of Title VI of the Civil Rights Act of 1964.

7 CFR part 3015—Uniform Federal Assistance Regulations.

7 CFR part 3017—Governmentwide Debarment and Suspension (Nonprocurement).

7 CFR part 3018—New Restrictions on Lobbying.

7 CFR part 3019—Uniform Administrative Requirements for Grants and Agreements with Institutions of Higher Education, Hospitals, and Other Non-Profit Organizations.

7 CFR part 3021—Governmentwide Requirements for Drug-Free Workplace (Financial Assistance).

7 CFR part 3052—Audits of States, Local Governments, and Non-Profit Organizations.

RBS was established under the authority of the Department of Agriculture Reorganization Act of 1994. The mission of RBS is to enhance the quality of life for rural Americans by providing leadership in building competitive businesses including sustainable cooperatives that can prosper in the global marketplace. RBS meets these goals by investing financial resources and providing technical assistance to cooperatives and other businesses located in rural communities and establishing strategic alliances and partnerships that leverage public, private, and cooperative resources to create jobs and stimulate rural economic activity.

The primary purposes of the 1890 Land Grant Institutions Rural Entrepreneurial Program Outreach Initiative are to encourage 1890 Institutions to provide technical assistance for business creation in economically challenged rural communities, to conduct educational programs that develop and improve upon the professional skills of rural entrepreneurs, and to provide outreach and promote USDA Rural Development programs in small rural communities with the greatest economic need. Project proposals must be designed to overcome currently identified economic problems and lead to sustainable economic development. Project proposals that address both traditional and nontraditional business enterprises are encouraged.

RBS will use cooperative agreements with the 1890 Institutions to strengthen the capacity of these communities to undertake innovative, comprehensive, citizen-led, long-term strategies for community and economic development. The cooperative agreements will be for an outreach and development effort to promote Rural Development programs in targeted underserved rural communities and shall include, but not be limited to:

(a) Developing a business startup program including technical assistance, to assist new cooperatives and other businesses with new business development, business planning, franchise startup and consulting, business expansion studies, marketing analysis, cash flow management, and seminars and workshops for cooperatives and small businesses;

(b) Developing management and technical assistance plans that will:

(1) Assess cooperative and small business alternatives to traditional agricultural and other natural resource based industries;

(2) Assist in the development of business plans or loan packages, marketing, or bookkeeping; and

(3) Assist and train cooperatives and small businesses in customer relations, product development, or business planning and development.

(c) Assessing local community weaknesses and strengths, feasible alternatives to agricultural production, and the necessary infrastructure to expand or develop new or existing businesses;

(d) Providing community leaders with advice and recommendations regarding best practices in community economic development stimulus programs for their communities;

(e) Conducting seminars to disseminate information to stimulate business and economic development in selected rural communities; and

(f) Conducting outreach through use of computer technology and maintaining an internet web presence which links community leaders and residents to available economic development information.

Funds may not be used to: (a) Pay costs of preparing the application package; (b) fund political activities; (c) pay costs prior to the effective date of the cooperative agreement; (d) provide for revolving funds; (e) do construction; (f) conduct any activities where there is or may appear to be a conflict of interest; or (g) purchase real estate.

II. Awards

Program awards will be made through cooperative agreements between RBS and the 1890s Institutions receiving the highest scores on their project proposals. The maximum amount of Federal funds awarded for any one proposal will be $100,000.

If an applicant is to receive an award that is less than the amount requested, the applicant will be required to modify the application to conform to the reduced amount before execution of the cooperative agreement. RBS reserves the right to reduce or de-obligate any award if acceptable modifications are not submitted by the awardee(s) within 10 working days from the date the application is returned to the applicant. Any modification must be within the scope of the original application.

Throughout the project period, USDA Rural Development's continued commitment to advance funds will be conditioned upon evidence of satisfactory progress by the recipient (as documented in certified acceptable quarterly progress and financial reports), and the determination that continued funding is in the best interest of U.S. Government.

III. Eligibility Requirements

1. Applicant Eligibility

To be eligible for an award under this program, an applicant must:

(a) Be an 1890 Institution which includes: Alabama A&M University; University of Arkansas-Pine Bluff; Delaware State University; Florida A&M University; Fort Valley State University; Kentucky State University; Southern University and A&M College; University of Maryland-Eastern Shore; Alcorn State University; Langston University; North Carolina A&T State University; Lincoln University (Missouri); South Carolina State University; Tennessee State University; Prairie View A&M University; Virginia State University; and West Virginia State University; and Tuskegee University. RBS will accept only one application per institution under this program. In the event that more than one application is submitted, the 1890 Institution's president will determine the official application for consideration;

(b) Demonstrate that the personnel assigned to the project have the expertise and experience necessary to fulfill the tasks set forth in the project proposal. Applicants should demonstrate a previous record of successful implementation of similar projects;

(c) Demonstrate expertise in the use of computer technologies to provide technical assistance and access to Internet web sites; and

(d) Submit a completed application as set forth in Section IV.3.

An applicant may subcontract with organizations not eligible to apply provided such organizations are necessary for the conduct of the project. However, the subcontracted amount may not exceed one-third of the total Federal award.

2. Project Eligibility

To be eligible for an award under this program, an applicant must:

(a) Demonstrate that the project eligible beneficiaries are located in a rural area as defined in 7 U.S.C. 1991(a)(13)(A) with a demonstrated economic need. Eligible beneficiaries must also be located in communities that show significant community support for the proposal;

(b) Provide matching funds equal to at least 25 percent of the total project costs; and

(c) Establish and maintain an internet web presence linked to the USDA Rural Development web site. This web site should contain links to additional economic development function that will benefit residents and community leaders.

3. Rural Area Definition

Rural underserved targeted counties/communities must be an area other than a city or town that has a population of greater than 50,000 inhabitants and the urbanized area contiguous and adjacent to such a city or town, as defined by the U.S. Bureau of Census using the latest decennial census of the United States.

4. Matching Funds

Matching funds may be provided by either the applicant or third party in the form of either cash or in-kind contributions and must be from non-Federal funds. Matching funds must be spent in proportion to the spending of funds received from the cooperative agreement. Applicants must verify in their applications that matching funds are available for the time period of the cooperative agreement.

IV. Application Process

1. Application Packages

If an institution plans to apply using a paper application, application packages, including the required forms for this funding opportunity, may be obtained from *http://www.rurdev.usda.gov/rbs/oa/1890.htm.* If an institution does not have access to the Internet, or if it is having difficulty accessing the forms online, it may contact the RBS at (202) 690–3407 or FAX (202) 690–2723. The application forms and instructions may also be requested via e-mail by sending a message with the contact person's name, mailing address, and phone number to *edgar.lewis@wdc.usda.gov.* The application forms and instructions will be mailed as quickly as possible. When calling or e-mailing RBS, please indicate that you are requesting application forms and instructions for FY 2005 1890 Land Grant Institutions Rural Entrepreneurial Outreach and Development Initiative.

If an institution plans to apply electronically, the forms must be obtained from *http://www.grants.gov.*

2. Application Submission

Applications must be received in the RBS National Office by 4 p.m. eastern time on August 29, 2005. Proposals received after 4 p.m. eastern time on August 29, 2005, will not be considered for funding. The applicant assumes the risk of any delay in proposal delivery. Applicants are strongly encouraged to submit completed applications electronically or via overnight mail or delivery service to ensure timely receipt by RBS. Receipt of all applications will be acknowledged by e-mail. Therefore, applicants are strongly encouraged to provide accurate e-mail addresses. If the applicant does not receive an acknowledgment within 7 work days of the submission deadline, please contact the program manager. If RBS receives your application after the deadline due to: (a) Carrier error, when the carrier accepted the package with guarantee for delivery by the closing date and time, or (b) Significant weather delays or natural disaster, you will be given the opportunity to document these problems. RBS will consider the application as having been received by the deadline if your documentation meets these requirements and verifies the delay was beyond your control. Applications submitted via facsimile will not be accepted.

An institution may submit its application in paper or in an electronic format. If a paper application is submitted, a signed original and two copies of the completed application must be submitted. The original and 2 copies must include all required forms, certifications, assurances, project proposal document, and appendices, be signed by an authorized representative of the institution, contain original signatures, and be submitted unbound.

A paper application submitted via the Postal Service must be addressed to Cooperative Programs, Attention: 1890 Land Grant Institutions' Rural Entrepreneurial Program Outreach Initiative Program, USDA, Mail Stop 3250, 1400 Independence Ave., SW., Washington, DC 20250. A paper application submitted via UPS, Federal Express, or similar delivery service must be addressed to Cooperative Programs, Attention: 1890 Land Grant Institutions' Rural Entrepreneurial Program Outreach Initiative Program, USDA Room 4016, 1400 Independence Ave., SW., Washington, DC 20250. The phone number to be used for FedEX or similar packages is (202) 720–7558.

If an application is submitted electronically, the application must be submitted at *http://www.grants.gov.* Applicants are advised to visit the site well in advance of the application deadline if they plan to apply electronically to insure that they have obtained the proper authentication and have sufficient computer resources to complete the application.

All Federal grant applicants must provide a Dun and Bradstreet Data Universal Numbering System (DUNS) number when applying for Federal grants and cooperative agreements. The DUNS number is required whether an applicant is submitting a paper application or using the government-wide electronic portal Grants.gov. A DUNS number is required for every application for a new award or renewal/continuation of an award, including applications or plans under formula, entitlement and block grant programs, submitted on or after October 1, 2003. Please ensure that your institution has a DUNS number. An institution may acquire a DUNS number at no cost by calling the dedicated toll-free DUNS number request line on 1–866–705–5711 or on-line at *http://www.dnd.com.*

If an institution's application does not contain a DUNS number field, please write the DUNS number at the top of the first page of the application, and/or include the DUNS number in the application cover letter.

3. Completed Application

To be eligible for funding, an application must contain all of the following elements. Any application that is missing any element or contains an incomplete element will not be considered for funding.

(a) Completed forms.

(1) Form SF–424, ''Application for Federal Assistance.''

(2) Form SF–424A, ''Budget Information—Non-Construction Programs,'' including Sections A, B, C, and D. The applicant must include both federal and matching funds.

(3) Form SF–424B, ''Assurances—Non-Construction Programs.''

(4) Form AD–1047, ''Certification Regarding Debarment, Suspension, and Other Responsibility Matters—Primary Covered Transactions.''

(5) Form AD–1049, ''Certification Regarding Drug-Free Workplace Requirements.''

(b) Letters of support.

(c) *Table of Contents*: For ease of locating information, each proposal must contain a detailed Table of Contents immediately following the required forms. The Table of Contents should include page numbers for each component of the proposal. Pagination should begin immediately following the Table of Contents. Provide page numbers in the Table of Contents where each evaluation criterion is addressed.

(d) *Project Executive Summary:* A summary of the Project Proposal, not to exceed one page.

(e) *Project Proposal:* The application must contain a narrative statement describing the nature of the proposed project. Each of the proposal evaluation criteria referenced in this funding announcement must be addressed, specifically and individually in narrative form. The proposal must include at least the following:

(1) Project Title Page. The Title Page must include the following: Title of the project, names of principal investigators, and applicant organization.

(2) Introduction. A concisely worded justification or rationale for the proposal must be presented. Summarize the social and economical statistical data (income, population, employment rate, poverty rate, education attainment, etc.), for the project area that substantiates the need for the initiative. Specify, whether the target area includes an Empowerment Zone/Enterprise Community, Champion Community, Federally-recognized Indian reservation or other Federally declared economic disaster area. An applicant should address the ''Economic Need of Community'' evaluation criterion in Section VII.1.(c).

(3) Workplan. Discuss the approach (strategy) to be used in carrying out the proposed project outreach and achieving the proposed objectives. Address the ''Statement of Work'' evaluation criterion in Section VII.1.(e). A description of any subcontracting arrangements to be used in carrying out the proposed project must be included. The workplan also must include:

(i) Overview: Identify and discuss the specific goals and objectives of the proposed project and its impact on the proposed beneficiaries;

(ii) Timeframes: Develop a tentative timeline for completing the major tasks outlined in the project proposal;

(iii) Milestones: Describe and quantify the expected outcomes of the proposed project, including the businesses created, professionals trained, jobs created or assisted, conferences and seminars conducted, and number of participants, loans packaged, etc.;

(iv) Recipient involvement: Identify the person(s) responsible for performing the project tasks; and

(v) USDA Rural Development involvement: Identify USDA Rural Development responsibilities for assisting and monitoring project tasks;

(4) Estimated Budget. Provide a detailed budget justification, showing both federal and applicant's matching funds, including in-kind contributions. Provide a budget to support the work plan showing all sources and uses of funds during the project period. Detail and document both cash and in-kind by sources. Note that only goods and services for which no expenditure is made can be considered in-kind. If the applicant is paying for the goods and services as part of the matching funds contribution, the expenditure is considered a cash match, and should be verified as such.

(5) Certification of Matching Funds. Certify that matching funds will be available at the same time Federal funds are anticipated to be spent and that matching funds will be spent in advance of Federal funding, such that for every dollar of Federal funds advanced or reimbursed, the applicant will have spent no less in proportion to the spending of Federal funds received from the cooperative agreement prior to submitting the request for reimbursement or advance. Please note that this certification is a separate requirement from the verification of Matching Funds requirement.

(6) Leveraging Funds. Discuss in narrative form how the institution will use other Federal, State, private, and

other sources of funds and resources to leverage the proposed project.

(7) Coordination and Management Plan. Describe how the project will be coordinated among the various participants, the nature of the collaborations and benefits to participants, the communities, the applicant, and Rural Development. Describe your plans for the management of the project to ensure its proper and efficient administration. Describe the scope of Rural Development's involvement in the project.

(8) Technology Outreach. The project proposal must address the applicant's ability to deliver computer technology to the targeted rural communities and maintain computer Internet Web sites linking community leaders and residents to available economic development information. Address the ''Digital Technology Outreach'' evaluation criterion in this Section VII.1.(f).

(9) Key Personnel Support. Provide the curriculum vitae for the key personnel used to carry out the goals and objectives of the proposal.

(10) Facilities or Equipment. Identify where the project will be located (housed) and what additional equipment is needed or already available to carry out the specific objectives of the project.

(11) Previous Accomplishments. Summarize the institution's previous outreach and development accomplishments work funded by USDA Rural Development or similar outreach or development experiences. This is especially important for first time applicants. Address the ''Previous Accomplishments'' evaluation criterion in Section VII.1.(d).

(12) Local and USDA Rural Development State Office Support. Provide letters of support from the local community such as businesses, educational institutions, local governments, community-based organizations, etc. Letters of support should demonstrate commitments for tangible resources and or assistance. Include any letter from the appropriate USDA Rural Development State Office evidencing its opportunity for input into your proposal and its involvement. Identify and discuss tangible support contained in the letters.

(13) Additional information. Provide any additional information that demonstrates commitment for tangible resources and or that supports your proposal. Additionally you are encouraged to provide any strategic plan that has been developed to assist cooperative and business development or entrepreneurship for the targeted communities.

V. Intergovernmental Review of Applications

Executive Order 12372 does apply to this program.

VI. Funding Restrictions

Based on Section 708 of Title 7 Consolidated Appropriations Act 2004, (Pub. L. 108–199) ''No funds appropriated by this Act may be used to pay negotiated indirect cost rates on cooperative agreements or similar arrangements between the United States Department of Agriculture and nonprofit institutions in excess of 10 percent of the total cost of the agreement when the purpose of such cooperative arrangement is to carry out programs of mutual interest between the two parties.'' Other funding restrictions are identified in Section III.

VII. Application Review

1. *Criteria*—Project proposals will be evaluated using the following seven criteria. Each criterion is given the weight value shown with total points equal to 100. The points assigned provide an indication of the relative importance of each section and will be used by the reviewers in evaluating the proposals. Points do not have to be awarded for each criterion. After all proposals have been evaluated, the Administrator may award an additional 10 discretionary points to any proposal to obtain the broadest geographic distribution of the funds, ensure a broad diversity of project proposals, or ensure a broad diversity in the size of the awards.

(a) Support of Local Community (Up to 10 points)—This criterion evaluates the support of local government, educational, community, and business groups. Higher points will be awarded for proposals demonstrating broad support from all components of the communities served, particularly cooperative groups. Broad support is demonstrated by tangible contributions, such as providing volunteers, computers, or transportation or co-sponsoring workshops and conferences. Points will be awarded based on the level of tangible contribution in comparison to the size of the award. Tangible support must be stated in letters from supporting entities.

(b) Matching Funds/Leveraging (Up to 10 points)—This criterion evaluates the extent to which the institution has the capacity to support the project with matching funds and leveraging additional funds and resources from State, private, public and non-profit sources to carry out this outreach and development initiative.

A maximum of 10 points will be awarded based upon the amount the proposal exceeds the minimum 25 percent matching requirement. Applicants will be required to provide matching funds or equivalent in-kind in support of this project. Evidence of matching funds availability must be provided. Funds or equivalent in-kind must be available at the time at which the cooperative agreement is entered. Matching funds points will be awarded as listed below.

>25 percent to 35 percent match.	2 points.
>35 percent to 50 percent match.	5 points.
>50 percent to 75 percent match.	7 points.
>75 percent match	10 points.

(c) Economic Need of Community (Up to 15 points)—This criterion evaluates the economic need of the targeted communities.

Five points will automatically be awarded to project proposals with at least one of the beneficiary communities located in a targeted community(s): Empowerment Zones, Enterprise Communities, Champion Communities, Federally-recognized Indian reservations, and other federally declared economic depressed or disaster areas. The application must state the name(s) and location(s) of the economically depressed community(s) and the type(s) of targeted community designation (*i.e.*, Empowerment Zone).

Up to a maximum of 7 additional points will be awarded for demonstrated economic need based upon the currently available poverty rate of the targeted local community(s). An applicant may use targeted county or community poverty rates. When multi-community proposals are submitted, the over-all weighted average for all counties or communities must be used. An applicant must use current (2000 Census) poverty data for each targeted county or community. Points will be awarded based upon the differences in the targeted county or community's average poverty from the respective State poverty rate (average targeted county or community poverty rate minus the respective State poverty rate). Percents will be rounded to the next whole number.

Less than 3 percent	0 points.
3–6 percent	1 point.
7–10 percent	2 points.
11–15 percent	5 points.
Greater than 15 percent	7 points.

Up to a maximum of 3 additional points may be awarded based upon the applicant's ability to demonstrate or

identify other economic needs of the targeted communities, such as, but not limited to, unemployment rates, education levels, and job availability. An applicant must provide sufficient information for the panel to properly evaluate and rate this criterion.

(d) Previous Accomplishments (Up to 10 points)—This criterion evaluates the applicant's previous accomplishments with this initiative and/or its demonstrative capacity to conduct similar projects.

One point will be awarded to an institution for each year it has been awarded a cooperative agreement under this program up to a total of 5 years. An applicant must provide evidence of satisfactorily completing the cooperative agreement for each year for which credit is claimed. Applicants with less than 5 recent years of awards in this program may receive up to the maximum 5 points by highlighting the applicant's previous performance in each of the past 5 years on projects with cooperative and other business development and outreach objectives. The applicant should discuss the potential impact of their project upon the targeted underserved rural communities, as well as describing previous similar outreach and development work.

Up to a maximum of 5 additional points may be awarded based upon an applicant's ability to document the positive impact of its project upon the targeted underserved rural communities. Positive entrepreneurial developments should be emphasized. Points will be awarded if an applicant demonstrates that its technical assistance resulted in the creation of a business(s) in an economically challenged community or that its educational programs have developed or improved upon the professional skills of rural entrepreneurs. The applicant must provide specific information as to the specific businesses created and/or professional educational programs offered.

(e) Statement of Work (up to 45 points)—This criterion evaluates the degree to which the proposed project addresses the major purposes for the ''1890 Land Grant Institutions Rural Entrepreneurial Program Outreach Initiative.'' Points will be awarded according to the degree to which the statement of work reflects innovative strategies for providing technical assistance for business creation in economically challenged rural communities, for educational programs to develop and improve upon the professional skills of rural entrepreneurs, and for outreach and promotion of USDA Rural Development's.

Up to a maximum of 20 points will be awarded to proposed projects that have a clearly and concisely stated work plan detailing goals and objectives, timetables, expected results, and measurable outcomes for providing technical assistance for business creation in economically challenged rural communities. The greatest number of points will be awarded to those proposed projects that demonstrate innovative and creative ways to accomplish these goals.

Up to a maximum of 15 additional points will be awarded to proposed projects that have a clearly and concisely stated work plan detailing goals and objectives, timetables, expected results, and measurable outcomes for educational programs to develop and improve upon the professional skills of rural entrepreneurs (*i.e.*; sustainable agricultural practices, real estate sales, real estate appraising, accounting for small entrepreneurs, etc.) The greatest number of points will be awarded to those proposed projects that demonstrate innovative and creative ways to accomplish these goals.

Up to a maximum of 10 additional points will be awarded to proposed projects for outreach and promotion of USDA Rural Development's programs in small rural communities with the greatest economic need. The greatest number of points will be awarded to those proposed projects that demonstrate innovative and creative ways to accomplish these goals.

All proposals must integrate substantial USDA Rural Development involvement.

(f) Digital Technology Outreach (Up to 5 points)—This criterion evaluates the applicant's experience and capacity to provide outreach and assistance to targeted underserved rural communities through use of computer technologies.

A maximum of 5 points will be awarded based upon the applicant's demonstrated capacity to promote innovations and improvements in the delivery of computer technology benefits, including a web presence to underserved rural communities whose share in these benefits is disproportionably low.

(g) Coordination and Management of the Project (Up to 5 points)—This criterion evaluates the applicant's demonstrated capacity to coordinate and manage the proposed project among the various stakeholders.

Up to a maximum of 5 points will be awarded based upon the applicant's ability to demonstrate broad and collaborative involvement with the applicant's respective USDA Rural Development State Office on the proposed project. This involvement and collaboration should include, but not be limited to: (1) Evidence of any USDA Rural Development State Office's input in and review of the applicant's proposal, (2) a detailed plan for the State Office's continued participation in the proposed project that includes specific participatory tasks, and (3) a detailed plan as to how Rural Development programs can be integrated into the proposed project.

2. Selection Process

Each application will be evaluated in a two-part process. First, each application will be reviewed to ensure that both the applicant and project meet the eligibility requirements as set forth in Section III. All applicants deemed to be eligible will be scored based upon the criteria set forth in Section VII.(1). Each eligible application will be scored by at least two expert reviewers. The individual scores for each application will be tallied and applications receiving the highest scores will be recommended to the Administrator, RBS, for award. The RBS Administrator has the final authority to award discretionary points in accordance with Section VII.(1) and determine the applications to be funded. If a tie score results after the proposals have been rated and ranked, the tie will be resolved by the proposal with the largest matching funds as a percent of the Federal amount of the award being selected for award.

VIII. Award Administration

1. Award Notification

Upon completion of the review process, successful applicants will be notified, in writing, by the USDA Rural Development National Office of its award. Each successful applicant will receive a cooperative agreement for signature by the institution's president or designee. The document will become binding upon execution by the appropriate USDA official.

Unsuccessful applicants will be notified, in writing, of the results of review.

2. Advance of Funds Requirements

Requests for advance of funds must be submitted to the National Office on a quarterly basis on a completed Form SF–270, ''Request for Advance or Reimbursement.'' A completed Form SF–269 (Long Form), ''Financial Status Report,'' must be submitted with each advance of funds request.

3. Project Reviews

USDA Rural Development State Office representatives will conduct semi-annual onsite reviews of award recipients as well as any additional reviews deemed necessary by the National Office.

4. Reporting Requirements

During the term of the cooperative agreement, each award recipient must submit quarterly progress reports and a final report detailing the tasks performed and results accomplished to the National and appropriate State Office. Quarterly reports must be submitted on or prior to January 31, April 28, and July 28, and October 31, 2006. A final report must be submitted within 90 days of the date of the project's completion. Reports may be submitted in hard copy original or an electronic copy that includes all required signatures. Failure to submit satisfactory, timely reports may result in suspension or termination of award.

Upon the request of USDA Rural Development, the award recipient will submit manuscripts, videotapes, software, or other media, as were identified in project proposals. USDA Rural Development retains those rights delineated in 7 CFR 3019.36.

5. Administrative Requirements

Award Recipients are responsible for:

(a) Completing the objectives as defined in the proposed workplan.

(b) Maintaining up-to-date project records during the term of the agreement.

(c) Maintaining an accounting of Federal and matching fund expenditures, including in-kind contributions. Award recipients must submit to the National Office a completed Form SF–269 (Long Form) with each advance of funds request and within 90 days of the project's completion.

(d) Immediately refunding to USDA Rural Development, at the end of the agreement, any balance of unobligated funds received from USDA Rural Development.

(e) Providing matching funds or equivalent in-kind in support of the project, at least to the level agreed to in the accepted proposal.

(g) Participating in the Annual or Bi-annual USDA Rural Development Entrepreneurship and Information Conferences/Workshops when planned.

(h) In cooperation with local businesses, developing a program of cooperative and business startup and technical assistance that will assist with new company development, business planning, new enterprise, franchise startup and consulting, business expansion studies, marketing analysis, cashflow management, and seminars and workshops for cooperatives and small businesses.

(i) Providing office space, equipment, and supplies for all personnel assigned to the project.

(j) Developing management and technical assistance plans in cooperation with USDA Rural Development State Office that will:

(1) Assess cooperative and small business alternatives to agriculture, and other natural resources-based industries;

(2) Assist in the development of business plans and loan packages, marketing, bookkeeping assistance, and organizational sustainability; and

(3) In cooperation with USDA Rural Development State Office, provide technical assistance and training in customer relations, product development, and business planning and development.

(k) Assessing local community needs, weaknesses and strengths, feasible alternatives to agriculture production, and the needed infrastructure to expand or develop new or existing businesses. The plans for any such studies must be submitted to the USDA Rural Development National office for approval prior to the study being conducted.

(l) In cooperation with the USDA Rural Development State Office, providing community leaders with advice and recommendations regarding best practices in community economic development stimulus programs for their communities.

(m) Developing digital technology outreach and establishing and maintaining an Internet web site, linking community leaders and residents to available economic development information.

(n) Assuring and certifying that it is in compliance with, and will comply in the course of the agreement with, all applicable laws, regulations, Executive Orders, and other generally applicable requirements, including those set out in 7 CFR parts 3015 and 3019.

(o) Using Federal funds only to pay meeting-related travel expenses when employees are performing a service of direct benefit to the Government and in direct furtherance of the objectives of the proposed agreement. Federal funds cannot be used to pay non-Federal employees to attend meetings.

(p) Not commingling or using program funds for administrative expenses to operate an intermediary relending program (IRP).

(q) Submitting to USDA Rural Development National Office, in writing, any request for revising the project work plan, budget, or requesting a no-cost extension amending the cooperative agreement.

(r) Assisting the USDA Rural Development State Office in conducting a semi-annual on-site review of the recipient's project.

(s) Collaborating, as needed, with the USDA Rural Development National and State Offices in performing the tasks in the agreement and providing the Rural Development National Office with the information necessary for Rural Development to fulfill its responsibilities in the agreement.

USDA Rural Development is responsible for:

(1) Monitoring the program as it is being implemented and operated, including monitoring of financial information to ensure that there is no commingling or use of program funds for administrative expenses to operate an IRP or other unapproved items.

(2) Terminating activity, after written notice, if tasks are not met.

(3) Reviewing and approving changes to key personnel.

(4) Providing technical assistance as needed.

(5) Approving the final plans for any community business workshops; cooperative, business, and economic development sessions; and training workshops to be conducted by the recipient.

(6) Providing reference assistance, as needed, to the recipient for technical assistance given on a one-on-one basis to entrepreneurs and startup businesses.

(7) Reviewing and commenting on strategic plans developed by recipients for targeted areas.

(8) Reviewing economic assessments made by the recipient for targeted counties enabling USDA Rural Development to determine the extent to which its programs are beneficial.

(9) Carefully screening projects to prevent First Amendment violations.

(10) Monitoring the program to ensure that a web site link to USDA-Rural Development is established and maintained.

(11) State Offices conducting semi-annual on-site reviews and submitting written reports to the National Office.

(12) Participating in 1890 outreach and development program workshops, seminars and conferences as needed.

(13) Providing any other work agreed to by USDA Rural Development in the Cooperative Agreement.

IX. Agency Contact

For Further Information Contact: Mr. Edgar L. Lewis, Program Manager, Rural

Business-Cooperative Service, USDA, Stop 3252, Room 4221, 1400 Independence Avenue, SW., Washington, DC 20250–3252. Telephone: (202) 690–3407, e-mail: *edgar.lewis@wdc.usda.gov.*

X. Paperwork Reduction Act

The paperwork burden associated with this initiative has been cleared by the Office of Management and Budget under OMB Control Number 0570–0041.

Dated: July 7, 2005.

David Rouzer,

Acting Administrator, Rural Business-Cooperative Service.

[FR Doc. 05–13752 Filed 7–12–05; 8:45 am]

BILLING CODE 3410–XY–P

DEPARTMENT OF COMMERCE

International Trade Administration

A–485–806

Notice of Extension of Time Limit for the Preliminary Results of Antidumping Duty Administrative Review: Certain Hot- Rolled Carbon Steel Flat Products from Romania

AGENCY: Import Administration, International Trade Administration, Department of Commerce.

SUMMARY: The Department of Commerce is extending the time limit for completion of the preliminary results of the administrative review of the antidumping duty order on certain hot–rolled carbon steel flat products from Romania until November 30, 2005. The period of review is November 1, 2003, through October 31, 2004.

EFFECTIVE DATE: July 13, 2005.

FOR FURTHER INFORMATION CONTACT: Dunyako Ahmadu or Dave Dirstine, Import Administration, International Trade Administration, U.S. Department of Commerce, 14th Street and Constitution Avenue, NW, Washington, DC 20230; telephone (202) 482–0198 and (202) 482–4033, respectively.

SUPPLEMENTARY INFORMATION:

Background

On December 27, 2004, the Department of Commerce (the Department) published a notice of initiation of the 2003–2004 antidumping duty administrative review of this order covering S.C. Ispat Sidex S.A, Sidex Trading S.r.l., and Metalexportimport, S.A. See *Notice of Initiation of Antidumping and Countervailing Duty Administrative Reviews and Request for Revocation in Part*, 69 FR 77181 (December 27, 2004).

Extension of Time Limit for Preliminary Results

The Tariff Act of 1930, as amended (the Act), provides at section 751(a)(3)(A) that the Department will issue the preliminary results of an administrative review of an antidumping duty order within 245 days after the last day of the anniversary month of the date of publication of the order. The Act provides further that, if the Department determines that it is not practicable to complete the review within this time period, the Department may extend the 245-day period to 365 days.

The Department has determined that it is not practicable to complete the preliminary results by the current deadline of August 2, 2005, because it received a request for an expedited changed–circumstances review for this order on March 24, 2005, followed by a request to conduct a sales–below-cost investigation on March 31, 2005. Following our initiation of a cost investigation, we requested that Ispat Sidex respond to a cost–of-production questionnaire and respond to supplemental questions regarding its home–market and U.S. questionnaire response.

This review presents new and complex issues for the Department to consider as a result of Romania's change in status from a non–market economy to a market economy on January 1, 2003 (see *Certain Small Diameter Carbon and Alloy Seamless Standard, Line, and Pressure Pipe From Romania: Final Results of Antidumping Duty Administrative Review*, 68 FR 12672 (March 17, 2003). Further, additional time is necessary to conduct a verification of Ispat Sidex's questionnaire responses.

Therefore, in accordance with section 751(a)(3)(A) of the Act and 19 CFR 351.213(h)(2), the Department is extending the time limit for the preliminary results by 120 days to November 30, 2005.

We are issuing this notice in accordance with section 751(a)(3)(A) of the Act.

Dated: July 7, 2005.

Susan Kuhbach,

Acting Deputy Assistant Secretary for Import Administration.

[FR Doc. E5–3714 Filed 7–12–05; 8:45 am]

BILLING CODE 3510–DS–S

DEPARTMENT OF COMMERCE

International Trade Administration

A–533–808

Stainless Steel Wire Rod From India: Final Results of Antidumping Duty Administrative Review and Determination to Revoke Order in Part

AGENCY: Import Administration, International Trade Administration, Department of Commerce.

SUMMARY: On January 7, 2005, the Department of Commerce published the preliminary results of the administrative review of the antidumping duty order on stainless steel wire rod (SSWR) from India. The review covers three companies for the period December 1, 2002, through November 30, 2003. We gave interested parties an opportunity to comment on the preliminary results. Based on our analysis of the comments received, we have made changes, including correction of a clerical error, in the margin calculations. The final weighted–average margins are listed below in the ''Final Results of Review'' section of this notice.

EFFECTIVE DATE: July 13, 2005.

FOR FURTHER INFORMATION CONTACT: Kristin Case at (202) 482–3174 or Minoo Hatten at (202) 482–1690, AD/CVD Operations, Office 5, Import Administration, International Trade Administration, U.S. Department of Commerce, 14th Street and Constitution Avenue, NW, Washington, DC 20230.

SUPPLEMENTARY INFORMATION:

Background

On January 7, 2005, we published the preliminary results of review, extended the time limit for these final results, and invited parties to comment. *Stainless Steel Wire Rods From India: Preliminary Results of Antidumping Duty Administrative Review, Intent To Revoke Order In Part, and Extension of Time Limit for the Final Results of Review*, 70 FR 1413 (January 7, 2005) (*Preliminary Results*). We received case briefs from the petitioner,[1] Chandan Steel, Ltd. (Chandan), and Viraj Alloys, Ltd., and VSL Wires, Ltd. (collectively Viraj). We received rebuttal briefs from Chandan, Viraj, and Isibars.[2]

[1] The petitioner is Carpenter Technology Corp.

[2] Isibars is comprised of the following entities: Isibars Limited, Zenstar Impex, and Shaktiman Steel Casting Pvt. Ltd.

The Department determined that several case and rebuttal briefs contained new factual information. In a separate memorandum, the Department outlined its rationale for either accepting or rejecting such information. See Memorandum to Laurie Parkhill entitled *Submissions of Untimely New Factual Information in the Administrative*

The Department of Commerce (the Department) has conducted this review in accordance with section 751(a) of the Tariff Act of 1930, as amended (the Act).

Scope of the Order

The products covered by this order are certain SSWRs, which are hot–rolled or hot–rolled annealed and/or pickled rounds, squares, octagons, hexagons or other shapes, in coils. SSWRs are made of alloy steels containing, by weight, 1.2 percent or less of carbon and 10.5 percent or more of chromium, with or without other elements. These products are only manufactured by hot–rolling, are normally sold in coiled form, and are of solid cross section. The majority of SSWRs sold in the United States are round in cross-section shape, annealed, and pickled. The most common size is 5.5 millimeters in diameter.

The products are currently classifiable under subheadings 7221.00.0005, 7221.00.0015, 7221.00.0030, 7221.00.0045, and 7221.00.0075 of the *Harmonized Tariff Schedule of the United States* (HTSUS). Although the HTSUS subheadings are provided for convenience and customs purposes, our written description of the scope of this proceeding remains dispositive.

Analysis of Comments Received

All issues raised in the parties' case and rebuttal briefs in the context of this administrative review are addressed in the ''Issues and Decision Memorandum'' from Barbara E. Tillman, Acting Deputy Assistant Secretary for Import Administration, to Joseph A. Spetrini, Acting Assistant Secretary for Import Administration, dated July 6, 2005 (Decision Memorandum), which is hereby adopted by this notice. Attached to this notice as an appendix is a list of the issues that the parties have raised and to which we have responded in the Decision Memorandum. Parties can find a complete discussion of all issues raised in this review and the corresponding recommendations in this public memorandum, which is on file in the Central Records Unit, Room B–099 of the main Department building. In addition, a complete version of the Decision Memorandum can be accessed directly on the Internet at *http://ia.ita.doc.gov/frn*. The paper copy and electronic version of the Decision Memorandum are identical in content.

Review of the Antidumping Duty Order on Stainless Steel Wire Rod from India, dated June 8, 2005. The Department requested that parties redact the new information rejected by the Department and any references to the information in the submissions and resubmit the documents.

Sales Below Cost in the Home Market

As discussed in detail in the preliminary results, the Department disregarded certain home–market sales that Viraj sold at prices below the cost of production. See *Preliminary Results*, 70 FR 1422. For these final results, the Department disregarded home–market sales made by Viraj and Isibars at below–cost prices.

Changes Since the Preliminary Results

Based on our analysis of the comments received, we have made changes to our calculations that have changed the results for certain companies. Further, although we used total adverse facts available to establish a dumping margin for Isibars in the *Preliminary Results*, we explained in that notice that we would allow Isibars an opportunity to correct certain deficiencies in its cost data for the final results. Subsequent to the Preliminary Results, we issued Isibars an additional cost–of-production supplemental questionnaire. Isibars corrected its prior deficiencies, and we conducted a cost verification. We calculated a dumping margin for Isibars and released those calculations to the parties for comment on May 13, 2005. See *Post–Preliminary Draft Analysis Memorandum of Isibars Limited for Stainless Steel Wire Rod from India Adm. Rev. 12/1/02 - 11/30/03*, dated May 13, 2005.

Revocation of Order in Part

On December 31, 2003, Viraj requested revocation of the antidumping duty order with respect to its sales of the subject merchandise, pursuant to 19 CFR 351.222(b). With its request for revocation, Viraj provided each of the certifications required under 19 CFR 351.222(e).

The Department may revoke, in whole or in part, an antidumping duty order upon completion of a review under section 751 of the Act. While Congress has not specified the procedures that the Department must follow in revoking an order, the Department has developed a procedure for revocation that is described in 19 CFR 351.222. This regulation requires that a company requesting revocation must submit the following: (1) a certification that the company has sold the subject merchandise at not less than normal value (NV) in the current review period and that the company will not sell subject merchandise at less than NV in the future; (2) a certification that the company sold commercial quantities of the subject merchandise to the United States in each of the three consecutive years forming the basis of the request; and (3) an agreement to immediate reinstatement of the order if the Department concludes that, subsequent to the revocation, the company sold subject merchandise at less than NV. See 19 CFR 351.222(e)(1). Upon receipt of such a request, the Department will consider the following: (1) whether the company in question has sold subject merchandise at not less than NV for a period of at least three consecutive years; (2) whether the company has agreed in writing to its immediate reinstatement in the order, as long as any exporter or producer is subject to the order, if the Department concludes that the company, subsequent to the revocation, sold the subject merchandise at less than NV; and (3) whether the continued application of the antidumping duty order is otherwise necessary to offset dumping. See 19 CFR 351.222(b)(2)(i).

In the *Preliminary Results*, we found that the request from Viraj met all of the criteria under 19 CFR 351.222. We continue to find that this is the case for Viraj. With regard to the criteria of subsection 19 CFR 351.222(b)(2), our final margin calculations show that Viraj sold SSWR at not less than NV during the current review period. In addition, Viraj sold SSWR at not less than NV in the two previous administrative reviews in which it was involved. See *Stainless Steel Wire Rods From India: Final Results and Partial Rescission of Antidumping Duty Administrative Review*, 69 FR 29923 (May 26, 2004) (covering the period from December 1, 2001, through November 30, 2002), and *Stainless Steel Wire Rods From India: Notice of Amended Final Results and Partial Rescission of Antidumping Duty Administrative Review*, 68 FR 38301 (June 27, 2003) (covering the period from December 1, 2000, through November 30, 2001).

Based on our examination of the sales data submitted by Viraj, we determine that it sold the subject merchandise in the United States in commercial quantities in each of the consecutive years cited by Viraj to support its request for revocation. Thus, we find that Viraj had zero or *de minimis* dumping margins for its last three administrative reviews and sold in commercial quantities in each of these years. Additionally, we find that the continued application of the antidumping duty order is not otherwise necessary to offset dumping. Therefore, we determine that Viraj qualifies for revocation of the order on SSWR pursuant to 19 CFR 351.222(b)(2) and that the order with respect to merchandise produced and exported by

Viraj should be revoked. In accordance with 19 CFR 351.222(f)(3), we are terminating the suspension of liquidation for any of the merchandise in question that is entered, or withdrawn from warehouse, for consumption on or after December 1, 2003, and will instruct U.S. Customs and Border Protection (CBP) to refund any cash deposits for such entries.

Although the petitioner has requested that the Department not revoke the order with respect to Viraj pending the resolution of outstanding litigation, the evidence currently before the Department shows that Viraj has met each of the criteria set forth in 19 CFR 351.222. See the Decision Memorandum at comment 8 for further discussion of this issue.

Final Results of Review

As a result of our review, we determine that the following weighted–average percentage margins exist for the period December 1, 2002, through November 30, 2003:

Producer or Exporter	Margin
Chandan Steel, Ltd.	2.10%
Isibars Limited, Zenstar Impex, and Shaktiman Steel Casting Pvt. Ltd.	27.20%
The Viraj Group (Viraj Alloys, Ltd. and VSL Wires, Ltd.)	0.00%

Assessment Rates

The Department will determine, and CBP shall assess, antidumping duties on all appropriate entries. In accordance with 19 CFR 351.212(b)(1), we have calculated importer- or customer–specific assessment rates or amounts, as appropriate, for merchandise subject to this review. We will issue appropriate assessment instructions directly to CBP within 15 days of publication of these final results of review.

Cash–Deposit Requirements

The following deposit requirements will be effective upon publication of these final results of administrative review for all shipments of SSWR from India entered, or withdrawn from warehouse, for consumption on or after the publication date of these final results, as provided by section 751(a)(2)(C) of the Act: (1) The cash–deposit rates for the reviewed companies will be the rates shown above; (2) for merchandise exported by other producers or exporters that were reviewed or investigated previously, the cash–deposit rate will continue to be the most recent rate published in the final determination or final results for which the producer or exporter received an individual rate; (3) if the exporter is not a firm covered in this review, a prior review, or the original less–than-fair–value (LTFV) investigation but the manufacturer is, the cash–deposit rate will be the rate established for the most recent period for the manufacturer of the subject merchandise; and (4) if neither the exporter nor the manufacturer is a firm covered in this or any previous review, the cash–deposit rate shall be 48.80 percent, the all–others rate established in the LTFV investigation. See *Final Determination of Sales at Less Than Fair Value: Certain Stainless Steel Wire Rods from India*, 58 FR 54110 (October 20, 1993). These deposit requirements shall remain in effect until the publication of the final results of the next administrative review.

Notification of Interested Parties

This notice serves as a final reminder to importers of their responsibility under 19 CFR 351.402(f) to file a certificate regarding the reimbursement of antidumping duties prior to liquidation of the relevant entries during the review period. Failure to comply with this requirement could result in the Secretary's presumption that reimbursement of antidumping duties occurred and the subsequent assessment of double antidumping duties.

This notice also serves as a reminder to parties subject to administrative protective orders (APO) of their responsibility concerning the disposition of proprietary information disclosed under APO as explained in the administrative protective order itself. Timely written notification of the return or destruction of APO materials or conversion to judicial protective order is hereby requested. Failure to comply with the regulations and terms of an APO is a sanctionable violation.

These final results of administrative review and notice are issued and published in accordance with sections 751(a)(1) and 777(i)(1) of the Act.

Dated: July 6, 2005.

Joseph A. Spetrini,

Acting Assistant Secretary for Import Administration.

APPENDIX — Issues in the Decision Memorandum

A. Issue with regard to Chandan
- *Comment 1:* Constructed–Value Profit Rate

B. Issues with regard to Isibars
- *Comment 2:* U.S. Movement Expenses
- *Comment 3:* Unreconciled Cost Difference

C. Issues with regard to Viraj
- *Comment 4:* Debt–Restructuring
- *Comment 5:* Review of Tax Returns at Verification
- *Comment 6:* Collapsing of VAL and VSL
- *Comment 7:* Request for Additional Sales and Cost Data
- *Comment 8:* Revocation
- *Comment 9:* Credit Expenses
- *Comment 10:* Indirect Selling Expenses Incurred in the Country of Manufacture
- *Comment 11:* Direct Material Costs
- *Comment 12:* Costs of Affiliated Power Company
- *Comment 13:* VAL's Fixed Overhead Costs
- *Comment 14:* Interest Expenses
- *Comment 15:* G&A Expenses
- *Comment 16:* Duty Drawback
- *Comment 17:* Constructed–Value Profit Rate
- *Comment 18:* Clerical Error in the CEP–Profit Calculation

[FR Doc. E5–3713 Filed 7–12–05; 8:45 am]

BILLING CODE 3510–DS–S

DEPARTMENT OF DEFENSE

Department of the Army; Corps of Engineers

Intent To Prepare a Joint Environmental Impact Statement/ Environmental Impact Report for the Coyote Creek Watershed Management Plan Feasibility Study, Orange and Los Angeles Counties, CA

AGENCY: Department of the Army; U.S. Army Corps of Engineers, DOD.

ACTION: Notice of intent.

SUMMARY: The Coyote Creek Watershed Study will integrate and balance the physical and biological systems within the watershed to enhance aquatic and terrestrial habitat, improve water quality, enhance water resources, increase trail connections, enhance passive recreation and open space, reduce sediment and erosion, and aid in flood protection. Additionally, the Watershed Management Plan will encourage greater cooperation between public agencies and private organizations to leverage limited resources and improve quality of life within the watershed. It will be a guidance document for watershed stakeholders to better manage watershed resources and land use. This Plan will identify and prioritize projects for maintaining, constructing, restoring, and enhancing resources that contribute to a healthy and sustainable watershed. Policy and management recommendations will result from this plan that will connect existing public

policy and watershed management principles.

The U.S. Army Corps of Engineers and the County of Orange, California will cooperate in conducting this feasibility study.

DATES: Scoping meetings are scheduled as follows:

1. July 14, 2005, 2–5 p.m., Fullerton City Hall, 303 West Commonwealth, Fullerton, CA 92823.

Additional public scoping meetings will be scheduled approximately every two months during the study. For specific dates, times and locations please contact Eileen Takata, County of Orange, Watershed & Coastal Resources Division, at (714) 834–4786 or E-mail at: *eileen.takata@rdmd.ocgov.com*.

ADDRESSES: U.S. Army Corps of Engineers, Los Angeles District, CESPL–PD–RL, P.O. Box 532711, Los Angeles, CA 90053–2325.

FOR FURTHER INFORMATION CONTACT: Mr. William O. Butler, at (213) 452–3873 or E-mail at: *william.o.butler@usace.army.mil*.

SUPPLEMENTARY INFORMATION:

1. Authorization

This study is authorized in response to a House Resolution dated 8 May 1954, which reads as follows: ''Resolved by the Committee on Public Works of the House of Representatives, United States, that the Board of Engineers for Rivers and Harbors is hereby requested to review the reports on (a) San Gabriel River and Tributaries, published as House Document No. 838, 76th Congress, 3rd Session; (b) Santa Ana River and Tributaries, published as House Document No. 135, 81st Congress, 1st Session; and (c) the project authorized by the Flood Control Act of 1936 for the protection of the metropolitan area in Orange County, with a view toward determining the advisability of modification of the authorized projects in the interest of flood control and related purposes.''

2. Background

The Coyote Creek Watershed study includes the Coyote Creek Watershed and the Carbon Canyon Watershed. These watersheds are highly urbanized and drain approximately 165 square miles of densely urbanized residential, commercial and industrial development. The Coyote Creek Watershed is drained by its namesake, Coyote Creek, and two principal tributaries, Fullerton Creek and Brea Creek. Coyote Creek is a concrete-lined trapezoidal channel that ultimately drains into the San Gabriel River. The Carbon Canyon Watershed is drained principally by Carbon Creek, Fullerton Creek and Brea Creek. These three creeds vary between rectangular and trapezoidal concrete and riprap channels.

The Corps has a total of three flood control dams in the Coyote Creek and Carbon Creek Watersheds: One at the headwaters of Fullerton Creek (Fullerton Dam); one on Brea Creek (Brea Dam); and the other on Carbon Creek (Carbon Canyon Dam). In addition to the flood control dams, there are six detention basins along Carbon Creek that are used for groundwater recharge and flood control.

3. Proposed Action

Although no specific proposed action has been identified to date, opportunities exist for multipurpose water quality improvements, ecosystem restoration, recreation and education.

4. Alternatives

Although no specific alternative plans have been identified to date, a full array of alternatives to the proposed action will be developed for analyses, including the no action plan.

Alex C. Dornstauder,

Colonel, U.S. Army, District Engineer.

[FR Doc. 05–13778 Filed 7–12–05; 8:45 am]

BILLING CODE 3710–KF–M

DEPARTMENT OF EDUCATION

Notice of Proposed Information Collection Requests

AGENCY: Department of Education.

SUMMARY: The Leader, Information Management Case Services Team, Regulatory Information Management Services, Office of the Chief Information Officer, invites comments on the proposed information collection requests as required by the Paperwork Reduction Act of 1995.

DATES: Interested persons are invited to submit comments on or before September 12, 2005.

SUPPLEMENTARY INFORMATION: Section 3506 of the Paperwork Reduction Act of 1995 (44 U.S.C. Chapter 35) requires that the Office of Management and Budget (OMB) provide interested Federal agencies and the public an early opportunity to comment on information collection requests. OMB may amend or waive the requirement for public consultation to the extent that public participation in the approval process would defeat the purpose of the information collection, violate State or Federal law, or substantially interfere with any agency's ability to perform its statutory obligations. The Leader, Information Management Case Services Team, Regulatory Information Management Services, Office of the Chief Information Officer, publishes that notice containing proposed information collection requests prior to submission of these requests to OMB. Each proposed information collection, grouped by office, contains the following: (1) Type of review requested, *e.g.* new, revision, extension, existing or reinstatement; (2) title; (3) summary of the collection; (4) description of the need for, and proposed use of, the information; (5) respondents and frequency of collection; and (6) reporting and/or recordkeeping burden. OMB invites public comment.

The Department of Education is especially interested in public comment addressing the following issues: (1) Is this collection necessary to the proper functions of the Department; (2) will this information be processed and used in a timely manner; (3) is the estimate of burden accurate; (4) how might the Department enhance the quality, utility, and clarity of the information to be collected; and (5) how might the Department minimize the burden of this collection on the respondents, including through the use of information technology.

Dated: July 7, 2005.

Angela C. Arrington,

Leader, Information Management Case Services Team, Regulatory Information Management Services, Office of the Chief Information Officer.

Office of Special Education and Rehabilitative Services

Type of Review: Revision.

Title: Report of Infants and Toddlers Receiving Early Intervention Services and of Program Settings Where Services are Provided in Accordance with Part C, and Report on Infants and Toddlers Exiting Part C.

Frequency: Annually.

Affected Public: State, local, or tribal gov't, SEAs or LEAs.

Reporting and Recordkeeping Hour Burden:

Responses: 56.

Burden Hours: 5,654.

Abstract: This package provides instructions and forms necessary for States to report, by race and ethnicity, the number of infants and toddlers with disabilities who: (a) Are served under IDEA, Part C; (b) are served in different program settings; and (c) exit Part C because of program completion and for other reasons. Data are obtained from state and local service agencies and are used to assess and monitor the

implementation of IDEA and for Congressional reporting.

Requests for copies of the proposed information collection request may be accessed from *http://edicsweb.ed.gov*, by selecting the ''Browse Pending Collections'' link and by clicking on link number 2818. When you access the information collection, click on ''Download Attachments'' to view. Written requests for information should be addressed to U.S. Department of Education, 400 Maryland Avenue, SW., Potomac Center, 9th Floor, Washington, DC 20202–4700. Requests may also be electronically mailed to the Internet address *OCIO_RIMG@ed.gov* or faxed to 202–245–6621. Please specify the complete title of the information collection when making your request.

Comments regarding burden and/or the collection activity requirements should be directed to Sheila Carey at her e-mail address *Sheila.Carey@ed.gov.* Individuals who use a telecommunications device for the deaf (TDD) may call the Federal Information Relay Service (FIRS) at 1–800–877–8339.

Office of Special Education and Rehabilitative Services

Type of Review: Revision.

Title: Report of Early Intervention Services on IFSPs Provided to Infants, Toddlers and Their Families in Accordance with Part C.

Frequency: Annually.

Affected Public: State, local, or tribal gov't, SEAs or LEAs (primary).

Reporting and Recordkeeping Hour Burden:

Responses: 56.

Burden Hours: 1,520.

Abstract: This package provides instructions and forms necessary for States to report, by race and ethnicity, the number of infants and toddlers with disabilities and their families receiving different types of Part C services, and the number of personnel employed and contracted to provide services for infants and toddlers with disabilities and their families. Data are obtained from state and local service agencies and are used to assess and monitor the implementation of IDEA and for Congressional reporting.

Requests for copies of the proposed information collection request may be accessed from *http://edicsweb.ed.gov*, by selecting the ''Browse Pending Collections'' link and by clicking on link number 2819. When you access the information collection, click on ''Download Attachments'' to view. Written requests for information should be addressed to U.S. Department of Education, 400 Maryland Avenue, SW., Potomac Center, 9th Floor, Washington, DC 20202–4700. Requests may also be electronically mailed to the Internet address *OCIO_RIMG@ed.gov* or faxed to 202–245–6621. Please specify the complete title of the information collection when making your request.

Comments regarding burden and/or the collection activity requirements should be directed to Sheila Carey at her e-mail address *Sheila.Carey@ed.gov*. Individuals who use a telecommunications device for the deaf (TDD) may call the Federal Information Relay Service (FIRS) at 1–800–877–8339.

Office of Special Education and Rehabilitative Services

Type of Review: Revision.

Title: Report of Early Intervention Services on IFSPs Provided to Infants, Toddlers and Their Families in Accordance with Part C.

Frequency: Annually.

Affected Public: State, local, or tribal gov't, SEAs or LEAs (primary).

Reporting and Recordkeeping Hour Burden:

Responses: 56.

Burden Hours: 1,520.

Abstract: This package provides instructions and forms necessary for States to report, by race and ethnicity, the number of infants and toddlers with disabilities and their families receving different types of Part C services, and the number of personnel employed and contracted to provide services for infants and toddlers with disabilities and their families. Data are obtained from state and local service agencies and are used to assess and monitor the implementation of IDEA and for Congressional reporting.

Requests for copies of the proposed information collection request may be accessed from *http://edicsweb.ed.gov*, by selecting the ''Browse Pending Collections'' link and by clicking on link number 2819. When you access the information collection, click on ''Download Attachments'' to view. Written requests for information should be addressed to U.S. Department of Education, 400 Maryland Avenue, SW., Potomac Center, 9th Floor, Washington, DC 20202–4700. Requests may also be electronically mailed to the Internet address *OCIO_RIMG@ed.gov* or faxed to 202–245–6621. Please specify the complete title of the information collection when making your request.

Comments regarding burden and/or the collection activity requirements should be directed to Sheila Carey at her e-mail address *Sheila.Carey@ed.gov*. Individuals who use a telecommunications device for the deaf (TDD) may call the Federal Information Relay Service (FIRS) at 1–800–877–8339.

Office of Special Education and Rehabilitative Services

Type of Review: New.

Title: Report of Dispute Resolution Under Part C of the Individuals with Disabilities Education Act: Complaints, Mediations, and Due Process Hearings.

Frequency: Annually.

Affected Public: State, local, or tribal gov't, SEAs or LEAs.

Reporting and Recordkeeping Hour Burden:

Responses: 56.

Burden Hours: 3,360.

Abstract: This package provides instructions and a form necessary for States to report dispute resolution data, including the data required under Section 618 of IDEA 2004 (number of due process complaints filed under section 615 and the number of hearings conducted, and the number of mediations held and the number of settlement agreements reached through such mediations). These data will be used for monitoring activities, for planning purposes, for congressional reporting requirements, and for dissemination to individuals and groups.

Requests for copies of the proposed information collection request may be accessed from *http://edicsweb.ed.gov*, by selecting the ''Browse Pending Collections'' link and by clicking on link number 2820. When you access the information collection, click on ''Download Attachments'' to view. Written requests for information should be addressed to U.S. Department of Education, 400 Maryland Avenue, SW., Potomac Center, 9th Floor, Washington, DC 20202–4700. Requests may also be electronically mailed to the Internet address *OCIO_RIMG@ed.gov* or faxed to 202–245–6621. Please specify the complete title of the information collection when making your request.

Comments regarding burden and/or the collection activity requirements should be directed to Sheila Carey at her e-mail address *Sheila.Carey@ed.gov*. Individuals who use a telecommunications device for the deaf (TDD) may call the Federal Information Relay Service (FIRS) at 1–800–877–8339.

Office of Special Education and Rehabilitative Services

Type of Review: Extension.

Title: Case Service Report.

Frequency: Annually.

Affected Public: State, local, or tribal gov't, SEAs or LEAs.

Reporting and Recordkeeping Hour Burden:

Responses: 80.

Burden Hours: 3,600.

Abstract: As required by Sections 13, 101(a)(10), 106 and 626 of the Rehabilitation Act, the data are submitted annually by State VR agencies. The data contain personal and program-related characteristics, including economic outcomes of persons with disabilities whose case records are closed.

Requests for copies of the proposed information collection request may be accessed from *http://edicsweb.ed.gov*, by selecting the ''Browse Pending Collections'' link and by clicking on link number 2786. When you access the information collection, click on ''Download Attachments'' to view. Written requests for information should be addressed to U.S. Department of Education, 400 Maryland Avenue, SW., Potomac Center, 9th Floor, Washington, DC 20202–4700. Requests may also be electronically mailed to the Internet address *OCIO_RIMG@ed.gov* or faxed to 202–245–6621. Please specify the complete title of the information collection when making your request.

Comments regarding burden and/or the collection activity requirements should be directed to Sheila Carey at *Sheila.Carey@ed.gov*. Individuals who use a telecommunications device for the deaf (TDD) may call the Federal Information Relay Service (FIRS) at 1–800–877–8339.

[FR Doc. 05–13741 Filed 7–12–05; 8:45 am]

BILLING CODE 4000–01–P

DEPARTMENT OF EDUCATION

Notice of Proposed Information Collection Requests

AGENCY: Department of Education.

ACTION: Correction notice.

SUMMARY: On July 8, 2005, the Department of Education published a notice in the **Federal Register** (Page 39496, Column 1) for the information collection, ''A Study of the Addition of Literacy Services for Vocational Rehabilitation Consumers''. This notice was inadvertently published. Please refer to the **Federal Register** notice of July 7, 2005, (Page 39249, Column 2). The Leader, Information Management Case Services Team, Regulatory Information Management Services, Office of the Chief Information Officer, hereby issues a correction notice as required by the Paperwork Reduction Act of 1995.

Dated: July 8, 2005

Angela C. Arrington,

Information Management Case Services Team, Regulatory Information Management Services, Office of the Chief Information Officer.

[FR Doc. 05–13731 Filed 7–12–05; 8:45 am]

BILLING CODE 4000–01–M

DEPARTMENT OF ENERGY

Federal Energy Regulatory Commission

[Docket No. ES05–33–000]

Access Energy Cooperative; Notice of Filing

July 6, 2005.

Take notice that on June 28, 2005, Access Energy Cooperative (AEC) submitted an application pursuant to section 204 of the Federal Power Act seeking authorization to borrow money pursuant to a loan agreement with the National Rural Utilities Cooperative Finance Corporation (CFC) in an amount not to exceed $15 million.

AEC also requests a waiver from the Commission's competitive bidding and negotiated placement requirements at 18 CFR 34.2.

Any person desiring to intervene or to protest this filing must file in accordance with Rules 211 and 214 of the Commission's Rules of Practice and Procedure (18 CFR 385.211 and 385.214). Protests will be considered by the Commission in determining the appropriate action to be taken, but will not serve to make protestants parties to the proceeding. Any person wishing to become a party must file a notice of intervention or motion to intervene, as appropriate. Such notices, motions, or protests must be filed on or before the comment date. Anyone filing a motion to intervene or protest must serve a copy of that document on the Applicant. On or before the comment date, it is not necessary to serve motions to intervene or protests on persons other than the Applicant.

The Commission encourages electronic submission of protests and interventions in lieu of paper using the ''eFiling'' link at *http://www.ferc.gov.* Persons unable to file electronically should submit an original and 14 copies of the protest or intervention to the Federal Energy Regulatory Commission, 888 First Street, NE., Washington, DC 20426.

This filing is accessible online at *http://www.ferc.gov*, using the ''eLibrary'' link and is available for review in the Commission's Public Reference Room in Washington, DC. There is an ''eSubscription'' link on the Web site that enables subscribers to receive e-mail notification when a document is added to a subscribed docket(s). For assistance with any FERC Online service, please e-mail *FERCOnlineSupport@ferc.gov*, or call (866) 208–3676 (toll free). For TTY, call (202) 502–8659.

Comment Date: 5 p.m. Eastern Time on July 22, 2005.

Magalie R. Salas,

Secretary.

[FR Doc. E5–3697 Filed 7–12–05; 8:45 am]

BILLING CODE 6717–01–P

DEPARTMENT OF ENERGY

Federal Energy Regulatory Commission

[Project No. 785–000]

Consumers Energy Company; Notice of Intent To File an Application for a New License

July 6, 2005.

a. *Type of Filing:* Notice of intent to file an application for a new license.

b. *Project No.:* 785–000.

c. *Date Filed:* April 7, 2005.

d. *Submitted By:* Consumers Energy Company—current licensee.

e. *Name of Project:* Calkins Bridge Hydroelectric Project.

f. *Location:* On the Kalamazoo River, in Allegan County, Michigan. The project does not occupy Federal lands of the United States.

g. *Filed Pursuant to:* Section 15 of the Federal Power Act.

h. *Licensee Contact:* David C. McIntosh, Consumers Energy Company, Hydro Generation, 330 Chestnut Street, Cadillac, MI 49601 (231) 779–5504.

i. *FERC Contact:* Tim Konnert, (202) 502–6359, *timothy.konnert@ferc.gov*.

j. *Effective Date of Current License:* September 10, 1980.

k. *Expiration Date of Current License:* April 10, 2010.

l. *The Project Consists of the Following Existing Facilities:* (1) A 42-foot-high, 1,330-foot-long dam comprised of: (i) A 1,100-foot-long earth filled embankment and (ii) a 230-foot-long integral powerhouse and gated spillway section topped with six Taintor gates; (2) a 8.5-mile-long, 1,550 acre reservoir with a normal water surface elevation of 615.0 feet; (3) a powerhouse containing three generating units with a total installed capacity of 2,550 kW; and (4) appurtenant facilities.

m. The licensee states its unequivocal intent to submit an application for a new license for Project No. 785.

Pursuant to 18 CFR 16.8, 16.9, and 16.10 each application for a new license and any competing license applications must be filed with the Commission at least 24 months prior to the expiration of the existing license. All applications for license for this project must be filed by April 10, 2008.

n. A copy of the application is available for review at the Commission in the Public Reference Room or may be viewed on the Commission's Web site at *http://www.ferc.gov* using the ''eLibrary'' link. Enter the docket number excluding the last three digits in the docket number field to access the document. For assistance, contact FERC Online Support at *FERCOnlineSupport@ferc.gov* or toll-free at 1–866–208–3676, or for TTY, (202) 502–8659. A copy is also available for inspection and reproduction at the address in item h above.

o. You may also register online at *http://www.ferc.gov/docs-filing/esubscription.asp* to be notified via email of new filings and issuances related to this or other pending projects. For assistance, contact FERC Online Support as shown in the paragraph above.

p. By this notice, the Commission is seeking corrections and updates to the attached mailing list for the Calkins Bridge Project. Updates should be filed with Magalie R. Salas, Secretary, Federal Energy Regulatory Commission, 888 First Street, NE., Washington, DC 20426.

Magalie R. Salas,

Secretary.

[FR Doc. E5–3700 Filed 7–12–05; 8:45 am]

BILLING CODE 6717–01–P

DEPARTMENT OF ENERGY

Federal Energy Regulatory Commission

[Docket Nos. RP05–267–001, RP97–406–034, RP00–15–006, RP00–344–005 and RP00–632–016]

Dominion Transmission, Inc.; Notice of Compliance Filing

July 6, 2005.

Take notice that on June 28, 2005, Dominion Transmission, Inc. (DTI) submitted a compliance filing pursuant to the Commission's Order Approving Uncontested Settlement issued on May 27, 2005, in the above proceedings.

DTI states that copies of the filing were served on parties on the official service list.

Any person desiring to protest this filing must file in accordance with Rule 211 of the Commission's Rules of Practice and Procedure (18 CFR 385.211). Protests to this filing will be considered by the Commission in determining the appropriate action to be taken, but will not serve to make protestants parties to the proceeding. Such protests must be filed in accordance with the provisions of Section 154.210 of the Commission's regulations (18 CFR 154.210). Anyone filing a protest must serve a copy of that document on all the parties to the proceeding.

The Commission encourages electronic submission of protests in lieu of paper using the ''eFiling'' link at *http://www.ferc.gov.* Persons unable to file electronically should submit an original and 14 copies of the protest to the Federal Energy Regulatory Commission, 888 First Street, NE., Washington, DC 20426.

This filing is accessible on-line at *http://www.ferc.gov*, using the ''eLibrary'' link and is available for review in the Commission's Public Reference Room in Washington, DC. There is an ''eSubscription'' link on the Web site that enables subscribers to receive email notification when a document is added to a subscribed docket(s). For assistance with any FERC Online service, please e-mail *FERCOnlineSupport@ferc.gov*, or call (866) 208–3676 (toll free). For TTY, call (202) 502–8659.

Magalie R. Salas,

Secretary.

[FR Doc. E5–3703 Filed 7–12–05; 8:45 am]

BILLING CODE 6717–01–P

DEPARTMENT OF ENERGY

Federal Energy Regulatory Commission

[Docket No. RP05–422–000]

El Paso Natural Gas Company; Notice of Tariff Filing

July 6, 2005.

Take notice that on June 30, 2005, El Paso Natural Gas Company (EPNG) tendered for filing as part of its FERC Gas Tariff, Volume No. 1–A, the tariff sheets listed in the Appendix to the filing, with an effective date of August 1, 2005, but may become effective January 1, 2006 if suspended for five months by EPNG.

EPNG states that the proposed changes will result in an increase of approximately 10.5% based on the 12-month period ending March 31, 2005, as adjusted.

Any person desiring to intervene or to protest this filing must file in accordance with Rules 211 and 214 of the Commission's Rules of Practice and Procedure (18 CFR 385.211 and 385.214). Protests will be considered by the Commission in determining the appropriate action to be taken, but will not serve to make protestants parties to the proceeding. Any person wishing to become a party must file a notice of intervention or motion to intervene, as appropriate. Such notices, motions, or protests must be filed in accordance with the provisions of Section 154.210 of the Commission's regulations (18 CFR 154.210). Anyone filing an intervention or protest must serve a copy of that document on the Applicant. Anyone filing an intervention or protest on or before the intervention or protest date need not serve motions to intervene or protests on persons other than the Applicant.

The Commission encourages electronic submission of protests and interventions in lieu of paper using the ''eFiling'' link at *http://www.ferc.gov*. Persons unable to file electronically should submit an original and 14 copies of the protest or intervention to the Federal Energy Regulatory Commission, 888 First Street, NE., Washington, DC 20426.

This filing is accessible on-line at *http://www.ferc.gov*, using the ''eLibrary'' link and is available for review in the Commission's Public Reference Room in Washington, DC. There is an ''eSubscription'' link on the Web site that enables subscribers to receive email notification when a document is added to a subscribed docket(s). For assistance with any FERC Online service, please email *FERCOnlineSupport@ferc.gov*, or call (866) 208–3676 (toll free). For TTY, call (202) 502–8659.

Magalie R. Salas,

Secretary.

[FR Doc. E5–3705 Filed 7–12–05; 8:45 am]

BILLING CODE 6717–01–P

DEPARTMENT OF ENERGY

Federal Energy Regulatory Commission

[Docket No. RP02–361–052]

Gulfstream Natural Gas System, L.L.C.; Notice of Negotiated Rate

July 6, 2005.

Take notice that on June 29, 2005, Gulfstream Natural Gas System, L.L.C. (Gulfstream) tendered for filing as part of its FERC Gas Tariff, Original Volume

No. 1, Original Sheet No. 8.01q, reflecting an effective date of July 1, 2005.

Gulfstream states that copies of its filing have been mailed to all affected customers and interested state commissions.

Any person desiring to intervene or to protest this filing must file in accordance with Rules 211 and 214 of the Commission's Rules of Practice and Procedure (18 CFR 385.211 and 385.214). Protests will be considered by the Commission in determining the appropriate action to be taken, but will not serve to make protestants parties to the proceeding. Any person wishing to become a party must file a notice of intervention or motion to intervene, as appropriate. Such notices, motions, or protests must be filed in accordance with the provisions of Section 154.210 of the Commission's regulations (18 CFR 154.210). Anyone filing an intervention or protest must serve a copy of that document on the Applicant. Anyone filing an intervention or protest on or before the intervention or protest date need not serve motions to intervene or protests on persons other than the Applicant.

The Commission encourages electronic submission of protests and interventions in lieu of paper using the ''eFiling'' link at *http://www.ferc.gov.* Persons unable to file electronically should submit an original and 14 copies of the protest or intervention to the Federal Energy Regulatory Commission, 888 First Street, NE., Washington, DC 20426.

This filing is accessible on-line at *http://www.ferc.gov* using the ''eLibrary'' link and is available for review in the Commission's Public Reference Room in Washington, DC. There is an ''eSubscription'' link on the Web site that enables subscribers to receive e-mail notification when a document is added to a subscribed docket(s). For assistance with any FERC Online service, please e-mail *FERCOnlineSupport@ferc.gov,* or call (866) 208–3676 (toll free). For TTY, call (202) 502–8659.

Magalie R. Salas,

Secretary.

[FR Doc. E5–3702 Filed 7–12–05; 8:45 am]

BILLING CODE 6717–01–P

DEPARTMENT OF ENERGY

Federal Energy Regulatory Commission

[Docket No. RP05–425–000]

National Fuel Gas Supply Corporation; Notice of Tariff Filing

July 6, 2005.

Take notice that on June 30, 2005, National Fuel Gas Supply Corporation (National) tendered for filing as part of its FERC Gas Tariff, Fourth Revised Volume No. 1, Seventy Eighth Revised Sheet No. 9 the following tariff sheet to become effective July 1, 2005.

Any person desiring to intervene or to protest this filing must file in accordance with Rules 211 and 214 of the Commission's Rules of Practice and Procedure (18 CFR 385.211 and 385.214). Protests will be considered by the Commission in determining the appropriate action to be taken, but will not serve to make protestants parties to the proceeding. Any person wishing to become a party must file a notice of intervention or motion to intervene, as appropriate. Such notices, motions, or protests must be filed in accordance with the provisions of Section 154.210 of the Commission's regulations (18 CFR 154.210). Anyone filing an intervention or protest must serve a copy of that document on the Applicant. Anyone filing an intervention or protest on or before the intervention or protest date need not serve motions to intervene or protests on persons other than the Applicant.

The Commission encourages electronic submission of protests and interventions in lieu of paper using the ''eFiling'' link at *http://www.ferc.gov.* Persons unable to file electronically should submit an original and 14 copies of the protest or intervention to the Federal Energy Regulatory Commission, 888 First Street, NE., Washington, DC 20426.

This filing is accessible on-line at *http://www.ferc.gov*, using the ''eLibrary'' link and is available for review in the Commission's Public Reference Room in Washington, DC. There is an ''eSubscription'' link on the Web site that enables subscribers to receive e-mail notification when a document is added to a subscribed docket(s). For assistance with any FERC Online service, please e-mail *FERCOnlineSupport@ferc.gov*, or call (866) 208–3676 (toll free). For TTY, call (202) 502–8659.

Magalie R. Salas,

Secretary.

[FR Doc. E5–3695 Filed 7–12–05; 8:45 am]

BILLING CODE 6717–01–P

DEPARTMENT OF ENERGY

Federal Energy Regulatory Commission

[Docket No. ES05–34–000]

Neptune Regional Transmission; Notice of Application for Issuance of Securities

July 5, 2005.

Take notice that on July 5, 2005, Neptune Regional Transmission System, L.L.C. submitted an application pursuant to section 204 of the Federal Power Act requesting that the Commission authorize it to (i) issue up to $550 million in senior secured notes; (ii) incur reimbursement obligations in the form of senior secured loans with respect to drawings made under letters of credit issued on behalf of Neptune with a face value of up to $52 million; and (iii) issue limited liability company membership interests. The Applicant has requested that the Commission issue an order no later than July 12, 2005.

Any person desiring to intervene or to protest in the above proceeding must file in accordance with Rules 211 and 214 of the Commission's Rules of Practice and Procedure (18 CFR 385.211 and 385.214) on or before 5 pm Eastern time on the specified comment date. It is not necessary to separately intervene again in a subdocket related to a compliance filing if you have previously intervened in the same docket. Protests will be considered by the Commission in determining the appropriate action to be taken, but will not serve to make protestants parties to the proceeding. Anyone filing a motion to intervene or protest must serve a copy of that document on the Applicant. In reference to filings initiating a new proceeding, interventions or protests submitted on or before the comment deadline need not be served on persons other than the applicant.

The Commission encourages electronic submission of protests and interventions in lieu of paper, using the FERC Online links at *http://www.ferc.gov*. To facilitate electronic service, persons with Internet access who will eFile a document and/or be listed as a contact for an intervenor must create and validate an eRegistration account using the

eRegistration link. Select the eFiling link to log on and submit the intervention or protests.

Persons unable to file electronically should submit an original and 14 copies of the intervention or protest to the Federal Energy Regulatory Commission, 888 First Street, NE., Washington, DC 20426.

The filing in the above proceeding is accessible in the Commission's eLibrary system. It is also available for review in the Commission's Public Reference Room in Washington, DC. There is an eSubscription link on the Web site that enables subscribers to receive e-mail notification when a document is added to a subscribed docket(s). For assistance with any FERC Online service, please e-mail *FERCOnlineSupport@ferc.gov* or call (866) 208–3676 (toll free). For TTY, call (202) 502–8659.

Comment Date: 5 p.m. Eastern Time on July 11, 2005.

Magalie R. Salas,

Secretary.

[FR Doc. E5–3698 Filed 7–12–05; 8:45 am]

BILLING CODE 6717–01–P

DEPARTMENT OF ENERGY

Federal Energy Regulatory Commission

[Docket No. RP01–205–009]

Southern Natural Gas Company; Notice of Negotiated Rate Tariff Filing

July 6, 2005.

Take notice that on June 30, 2005, Southern Natural Gas Company (Southern) tendered for filing the tariff sheets set forth below to reflect: (i) The expiration of one negotiated rate arrangement, (ii) changes in existing negotiated rate arrangements; and (iii) the addition of two new negotiated rate arrangements.

Third Revised Sheet No. 23A, July 1, 2005.
Third Revised Sheet No. 23J, June 1, 2005.
Fourth Revised Sheet No. 23J, July 1, 2005.

Southern requests that the Commission grant such approval of the tariff sheets effective June 1, 2005 or July 1, 2005, as set forth above.

Any person desiring to intervene or to protest this filing must file in accordance with Rules 211 and 214 of the Commission's Rules of Practice and Procedure (18 CFR 385.211 and 385.214). Protests will be considered by the Commission in determining the appropriate action to be taken, but will not serve to make protestants parties to the proceeding. Any person wishing to become a party must file a notice of intervention or motion to intervene, as appropriate. Such notices, motions, or protests must be filed in accordance with the provisions of Section 154.210 of the Commission's regulations (18 CFR 154.210). Anyone filing an intervention or protest must serve a copy of that document on the Applicant. Anyone filing an intervention or protest on or before the intervention or protest date need not serve motions to intervene or protests on persons other than the Applicant.

The Commission encourages electronic submission of protests and interventions in lieu of paper using the ''eFiling'' link at *http://www.ferc.gov.* Persons unable to file electronically should submit an original and 14 copies of the protest or intervention to the Federal Energy Regulatory Commission, 888 First Street, NE., Washington, DC 20426.

This filing is accessible on-line at *http://www.ferc.gov,* using the ''eLibrary'' link and is available for review in the Commission's Public Reference Room in Washington, DC. There is an ''eSubscription'' link on the Web site that enables subscribers to receive e-mail notification when a document is added to a subscribed docket(s). For assistance with any FERC Online service, please e-mail *FERCOnlineSupport@ferc.gov,* or call (866) 208–3676 (toll free). For TTY, call (202) 502–8659.

Magalie R. Salas,

Secretary.

[FR Doc. E5–3701 Filed 7–12–05; 8:45 am]

BILLING CODE 6717–01–P

DEPARTMENT OF ENERGY

Federal Energy Regulatory Commission

[Docket No. CP05–356–001]

Tennessee Gas Pipeline Company; Notice of Compliance Filing

July 6, 2005.

Take notice that on June 30, 2005, Tennessee Gas Pipeline Company (Tennessee) tendered for filing as part of its FERC Gas Tariff, Original Volume No. 2, First Revised Sheet No. 1189, with an effective date of June 24, 2005.

Tennessee states that the filing is being made in compliance with the Commission's June 24, 2005 Order Approving Amendment to Service Agreement.

Any person desiring to protest this filing must file in accordance with Rule 211 of the Commission's Rules of Practice and Procedure (18 CFR 385.211). Protests to this filing will be considered by the Commission in determining the appropriate action to be taken, but will not serve to make protestants parties to the proceeding. Such protests must be filed in accordance with the provisions of Section 154.210 of the Commission's regulations (18 CFR 154.210). Anyone filing a protest must serve a copy of that document on all the parties to the proceeding.

The Commission encourages electronic submission of protests in lieu of paper using the ''eFiling'' link at *http://www.ferc.gov.* Persons unable to file electronically should submit an original and 14 copies of the protest to the Federal Energy Regulatory Commission, 888 First Street, NE., Washington, DC 20426.

This filing is accessible on-line at *http://www.ferc.gov*, using the ''eLibrary'' link and is available for review in the Commission's Public Reference Room in Washington, DC. There is an ''eSubscription'' link on the Web site that enables subscribers to receive email notification when a document is added to a subscribed docket(s). For assistance with any FERC Online service, please e-mail *FERCOnlineSupport@ferc.gov*, or call (866) 208–3676 (toll free). For TTY, call (202) 502–8659.

Magalie R. Salas,

Secretary.

[FR Doc. E5–3706 Filed 7–12–05; 8:45 am]

BILLING CODE 6717–01–P

DEPARTMENT OF ENERGY

Federal Energy Regulatory Commission

[Docket No. RP05–408–000]

Texas Eastern Transmission, LP; Notice of Proposed Changes in FERC Gas Tariff

July 6, 2005.

Take notice that on June 30, 2005, Texas Eastern Transmission, LP (Texas Eastern) tendered for filing as part of its FERC Gas Tariff, Seventh Revised Volume No. 1 and First Revised Volume No. 2, revised tariff sheets, as listed on Appendix B to the filing, to become effective August 1, 2005.

Texas Eastern states that these revised tariff sheets are filed pursuant to section 15.1, Electric Power Cost (EPC) Adjustment, of the General Terms and Conditions of Texas Eastern's FERC Gas Tariff, Seventh Revised Volume No. 1.

Texas Eastern states that copies of its filing have been served upon all

customers of Texas Eastern and interested state commissions.

Any person desiring to intervene or to protest this filing must file in accordance with Rules 211 and 214 of the Commission's Rules of Practice and Procedure (18 CFR 385.211 and 385.214). Protests will be considered by the Commission in determining the appropriate action to be taken, but will not serve to make protestants parties to the proceeding. Any person wishing to become a party must file a notice of intervention or motion to intervene, as appropriate. Such notices, motions, or protests must be filed in accordance with the provisions of Section 154.210 of the Commission's regulations (18 CFR 154.210). Anyone filing an intervention or protest must serve a copy of that document on the Applicant. Anyone filing an intervention or protest on or before the intervention or protest date need not serve motions to intervene or protests on persons other than the Applicant.

The Commission encourages electronic submission of protests and interventions in lieu of paper using the ''eFiling'' link at *http://www.ferc.gov.* Persons unable to file electronically should submit an original and 14 copies of the protest or intervention to the Federal Energy Regulatory Commission, 888 First Street, NE., Washington, DC 20426.

This filing is accessible on-line at *http://www.ferc.gov*, using the ''eLibrary'' link and is available for review in the Commission's Public Reference Room in Washington, DC. There is an ''eSubscription'' link on the Web site that enables subscribers to receive email notification when a document is added to a subscribed docket(s). For assistance with any FERC Online service, please email *FERCOnlineSupport@ferc.gov*, or call (866) 208–3676 (toll free). For TTY, call (202) 502–8659.

Magalie R. Salas,

Secretary.

[FR Doc. E5–3704 Filed 7–12–05; 8:45 am]

BILLING CODE 6717–01–P

DEPARTMENT OF ENERGY

Federal Energy Regulatory Commission

[Project No. 12053–001]

West Valley Hydroelectric Project; Notice of Extension of Time To Submit Scoping Comments

July 6, 2005.

The Commission has extended the scoping comment period for the West Valley Project, to allow time for all interested parties to review the transcripts for the scoping meetings held on June 15, 2005. The deadline for filing scoping comments is now July 25, 2005.

All documents (original and eight copies) should be filed with: Magalie R. Salas, Secretary, Federal Energy Regulatory Commission, 888 First Street, NE., Washington, DC 20426. Scoping comments may be filed electronically via the Internet in lieu of paper. The Commission strongly encourages electronic filings. See 18 CFR 385.2001(a)(1)(iii) and the instructions on the Commission's Web site (*http://www.ferc.gov*) through the Commission's eLibrary using the ''Documents & Filing'' link.

Procedural schedule: The application will be processed according to the following schedule. Revisions to the schedule may be made as appropriate.

Major milestone	Target date
Scoping Comments due	July 25, 2005.
Additional Information Request (AIR)	August 2005.
AIR Response due from Applicant	November 2005.
Notice that application is ready for environmental analysis	November 2005.
Comments, Terms and Conditions due	January 2006.
Reply Comments due	March 2006.
Environmental Assessment Issued	April 2006.
Ready for Commission's decision on the application	June 2006.

Magalie R. Salas,

Secretary.

[FR Doc. E5–3699 Filed 7–12–05; 8:45 am]

BILLING CODE 6717–01–P

DEPARTMENT OF ENERGY

Federal Energy Regulatory Commission

[Docket No. EL05–109–000]

Tax Deduction for Manufacturing Activities Under the American Jobs Creation Act of 2004; Errata Notice

July 6, 2005.

On June 2, 2005, the Commission issued a Guidance Order [1] on the Tax Deduction for Manufacturing Activities under the American Jobs Creation Act of 2004.[2]

The last sentence of paragraph number 2 is revised as follows: (1) The phrase ''equivalent of reducing'' is replaced by the phrase ''9 percent of qualified production activity income and could reduce,'' and (2) the phrase ''from 35 percent to 32 percent'' is eliminated.

By direction of the Commission.

Magalie R. Salas,

Secretary.

[FR Doc. E5–3696 Filed 7–12–05; 8:45 am]

BILLING CODE 6717–01–P

[1] 111 FERC ¶ 61,351 (2005) (June 2 Order).

[2] Pub. L. 108–357, 118 Stat. 1418 (2004) (adding additional section 199 to the Internal Revenue Code, 26 U.S.C. 1 *et seq.* (2000)).

ENVIRONMENTAL PROTECTION AGENCY

[OAR–2005–0135 FRL–7937–8]

Agency Information Collection Activities: Proposed Collection; Comment Request; Recordkeeping and Reporting for the Performance-Based Qualification of Test Methods for Diesel Fuel, EPA ICR Number 2180.02, OMB Control Number 2060–0566

AGENCY: Environmental Protection Agency (EPA).

ACTION: Notice.

SUMMARY: In compliance with the Paperwork Reduction Act (44 U.S.C. 3501 *et seq.*), this document announces that EPA is planning to submit a

proposed Information Collection Request (ICR) to the Office of Management and Budget (OMB). This is a request to renew an existing, approved ''emergency'' collection. This ICR is scheduled to expire on September 30, 2005. Before submitting the ICR to OMB for review and approval, EPA is soliciting comments on specific aspects of the proposed information collection as described below.

DATES: Comments must be submitted on or before September 12, 2005.

ADDRESSES: Submit your comments, referencing docket ID number OAR–2005–0135, to EPA online using EDOCKET (our preferred method), by e-mail to a-and-r-docket@epa.gov, or by mail to: EPA Docket Center, Environmental Protection Agency, Air and Radiation Docket (6102T), 1200 Pennsylvania Ave., NW., Washington, DC 20460.

FOR FURTHER INFORMATION CONTACT: Anne Pastorkovich, Attorney/Advisor, Environmental Protection Agency, Transportation & Regional Programs Division (6406J), 1200 Pennsylvania Ave., NW., Washington, DC 20460; telephone number: 202–343–9623; fax number: 202–343–2801; e-mail address: *pastorkovich.anne-marie@epa.gov.*

SUPPLEMENTARY INFORMATION: EPA has established a public docket for this ICR under Docket ID number OAR–2005–0135, which is available for public viewing at the Air and Radiation Docket in the EPA Docket Center (EPA/DC), EPA West, Room B102, 1301 Constitution Ave., NW., Washington, DC. The EPA Docket Center Public Reading Room is open from 8:30 a.m. to 4:30 p.m., Monday through Friday, excluding legal holidays. The telephone number for the Reading Room is (202) 566–1744, and the telephone number for the Air and Radiation Docket is (202) 566–1742. An electronic version of the public docket is available through EPA Dockets (EDOCKET) at *http://www.epa.gov/edocket.* Use EDOCKET to obtain a copy of the draft collection of information, submit or view public comments, access the index listing of the contents of the public docket, and to access those documents in the public docket that are available electronically. Once in the system, select ''search,'' then key in the docket ID number identified above.

Any comments related to this ICR should be submitted to EPA within 60 days of this notice. EPA's policy is that public comments, whether submitted electronically or in paper, will be made available for public viewing in EDOCKET as EPA receives them and without change, unless the comment contains copyrighted material, CBI, or other information whose public disclosure is restricted by statute. When EPA identifies a comment containing copyrighted material, EPA will provide a reference to that material in the version of the comment that is placed in EDOCKET. The entire printed comment, including the copyrighted material, will be available in the public docket. Although identified as an item in the official docket, information claimed as CBI, or whose disclosure is otherwise restricted by statute, is not included in the official public docket, and will not be available for public viewing in EDOCKET. For further information about the electronic docket, see EPA's **Federal Register** notice describing the electronic docket at 67 FR 38102 (May 31, 2002), or go to *http://www.epa.gov/edocket.*

Affected entities: Entities potentially (with SIC Code/2002 NAICS Code) affected by this action are as follows: Refiners (2911/324110), importers (5172/424720), and laboratories (8734/541380).

Title: Recordkeeping and Reporting for the Performance-Based Qualification of Test Methods for Diesel Fuel

Abstract: With this information collection request (ICR), the Office of Air and Radiation (OAR) is seeking permission to continue to collect applications from refiners, importers, and independent laboratories in order to permit them to use performance-based test methods for measuring sulfur in diesel fuel and detecting the presence of a marker in diesel sold as heating oil. An emergency ICR is in effect through September 2005.

In the past, we would set up a designated test method for measuring compliance with various fuel parameters. Typically, this test method was an American Society for Testing and Materials (ASTM) procedure that our laboratory used. Regulated parties would have to use the same method. In certain circumstances, alternative test methods were named. If a regulated party used an alternative test method, all results would have to be correlated to the designated test method. Simply put, the party would have to develop and apply a correlation equation to all its results to bring them in line with the designated test method.

The recent regulations for diesel fuel incorporated a performance-based test method approach. See ''Air Pollution Control; New Motor Vehicles and Engines: Nonroad Diesel Engines and Fuel; Emissions Standards,'' 69 FR 38957 (June 29, 2004). This approach sets up accuracy and precision criteria, but permits regulated parties to qualify their laboratories to use their own test methods. Industry supports this approach and welcomes it as a first step to a more comprehensive performance-based approach to test method issues.

In order to be qualified to use a test method, a refiner's or importer's laboratory or an independent laboratory will have to submit certain information to us. Unfortunately, these reporting provisions were not included in the information collection request for that final rule. The first day by which regulated parties may comply was December 27, 2004 and many were waiting to submit applications, so we submitted an emergency ICR request to OMB to permit us to accept applications until September 2005. This supporting statement has been prepared to support our ''regular'' ICR request, to take us beyond the emergency clearance's expiration date.

An agency may not conduct or sponsor, and a person is not required to respond to, a collection of information unless it displays a currently valid OMB control number. The OMB control numbers for EPA's regulations in 40 CFR are listed in 40 CFR part 9.

The EPA would like to solicit comments to:

(i) Evaluate whether the proposed collection of information is necessary for the proper performance of the functions of the Agency, including whether the information will have practical utility;

(ii) Evaluate the accuracy of the Agency's estimate of the burden of the proposed collection of information, including the validity of the methodology and assumptions used;

(iii) Enhance the quality, utility, and clarity of the information to be collected; and

(iv) Minimize the burden of the collection of information on those who are to respond, including through the use of appropriate automated electronic, mechanical, or other technological collection techniques or other forms of information technology, *e.g.*, permitting electronic submission of responses.

Burden Statement: We estimate the total annual respondent burden associated with this proposed collection to be 46,500 hours and $3,023,000 (of which $0 is capital and maintenance cost or ''O&M.'') It is assumed that there will be 225 respondents, averaging one response each, and averaging 180 hours per response. We estimate an annual cost burden to the Agency of 659 hours and $44,500. For a more detailed explanation of our assumptions and estimates, please refer to the draft supporting statement in the docket.

Burden means the total time, effort, or financial resources expended by persons to generate, maintain, retain, or disclose or provide information to or for a Federal agency. This includes the time needed to review instructions; develop, acquire, install, and utilize technology and systems for the purposes of collecting, validating, and verifying information, processing and maintaining information, and disclosing and providing information; adjust the existing ways to comply with any previously applicable instructions and requirements; train personnel to be able to respond to a collection of information; search data sources; complete and review the collection of information; and transmit or otherwise disclose the information.

Dated: July 6, 2005.

Jeffrey R. Holmstead,

Assistant Administrator, Office of Air and Radiation.

[FR Doc. 05–13775 Filed 7–12–05; 8:45 am]

BILLING CODE 6560–50–P

ENVIRONMENTAL PROTECTION AGENCY

[ORD–2005–0003, FRL–7937–9]

Agency Information Collection Activities: Proposed Collection; Comment Request; Market-Based Stormwater Management in the Shepherd Creek Watershed in Cincinnati, OH; EPA ICR Number 2178.01, OMB Control Number

AGENCY: Environmental Protection Agency.

ACTION: Notice.

SUMMARY: In compliance with the Paperwork Reduction Act (44 U.S.C. 3501 *et seq.*), this document announces that EPA is planning to submit a proposed Information Collection Request (ICR) to the Office of Management and Budget (OMB). This is a request for a new collection. Before submitting the ICR to OMB for review and approval, EPA is soliciting comments on specific aspects of the proposed information collection as described below.

DATES: Comments must be submitted on or before September 12, 2005.

ADDRESSES: Submit your comments, referencing docket ID number ORD–2005–0003, to EPA online using EDOCKET (our preferred method), by e-mail to *ord.docket@epa.gov*, or by mail to: EPA Docket Center, Environmental Protection Agency, ORD Docket, 1200 Pennsylvania Ave., NW., Washington, DC 20460.

FOR FURTHER INFORMATION CONTACT: Hale W. Thurston, ORD, NRMRL, Mail Code 499, 26 W. Martin Luther King Jr. Drive, Cincinnati, OH, 45268; telephone number: 513.569.7627; fax number: 513.487.2511; e-mail address: *thurston.hale@epa.gov*.

SUPPLEMENTARY INFORMATION: EPA has established a public docket for this ICR under Docket ID number ORD–2005–0003, which is available for public viewing at the ORD Docket in the EPA Docket Center (EPA/DC), EPA West, Room B102, 1301 Constitution Ave., NW., Washington, DC. The EPA Docket Center Public Reading Room is open from 8:30 a.m. to 4:30 p.m., Monday through Friday, excluding legal holidays. The telephone number for the Reading Room is (202) 566–1744, and the telephone number for the ORD Docket is (202) 566–0226. An electronic version of the public docket is available through EPA Dockets (EDOCKET) at *http://www.epa.gov/edocket*. Use EDOCKET to obtain a copy of the draft collection of information, submit or view public comments, access the index listing of the contents of the public docket, and to access those documents in the public docket that are available electronically. Once in the system, select ''search,'' then key in the docket ID number identified above.

Any comments related to this ICR should be submitted to EPA within 60 days of this notice. EPA's policy is that public comments, whether submitted electronically or in paper, will be made available for public viewing in EDOCKET as EPA receives them and without change, unless the comment contains copyrighted material, CBI, or other information whose public disclosure is restricted by statute. When EPA identifies a comment containing copyrighted material, EPA will provide a reference to that material in the version of the comment that is placed in EDOCKET. The entire printed comment, including the copyrighted material, will be available in the public docket. Although identified as an item in the official docket, information claimed as CBI, or whose disclosure is otherwise restricted by statute, is not included in the official public docket, and will not be available for public viewing in EDOCKET. For further information about the electronic docket, see EPA's **Federal Register** notice describing the electronic docket at 67 FR 38102 (May 31, 2002), or go to *http://www.epa.gov./edocket*.

Affected entities: Entities potentially affected by this action are residents of Mount-Airy/Shepherd Creek area of Cincinnati, OH.

Title: Market-based Stormwater Management in the Shepherd Creek Watershed in Cincinnati, Ohio.

Abstract: The Sustainable Technology Division (STD) of the National Risk Management Research Laboratory (NRMRL) in the Office of Research and Development (ORD) of the U.S. Environmental Protection Agency (EPA) is proposing to conduct a survey of individual property owners in the Shepherd Creek watershed in Cincinnati, OH. The survey will elicit how residents value the voluntary implementation of on-site, structural best management practices as part of a comprehensive stormwater runoff control policy. The focus will be on estimating the minimum monetary value the landowner would judge necessary to dedicate a portion of their property to implementation of best management practices that reduce runoff.

This data collection is motivated by the current stormwater-related problems within the United States in general, and in the greater Cincinnati metropolitan area in particular. Urban and suburban development changes the natural landscape making it more impervious to rain and snow. The resulting stormwater runoff is one of the most significant contributors to water quality degradation in the United States through larger and more frequent floods, increased erosion of stream beds and banks, disruption of natural habitat in receiving waters, and increased pollution loadings of metals, toxics, and nutrients. Precipitation falls over large geographic areas, and the resulting runoff will flow across a myriad of parcels with varying land uses, which are, in turn, under the control of numerous property owners. Perhaps in reaction to these conditions, stormwater control policies have concentrated on solutions that build centralized detention BMPs to temporarily hold excess runoff within the storm sewer system. An alternative, decentralized approach to stormwater control would be to distribute BMPs at terrestrial locations throughout the watershed, thus reducing runoff before it reaches the sewer system. This approach provides both hydrological benefits of reducing degradation of receiving waters, which would likely continue due to discharges from a centralized sewer conveyance system, as well as potential cost-savings in terms of meeting water quality standards, habitat renewal, and other environmental goals.

Although the installation, operation, and maintenance costs for best management practices are relatively well known, these are only a portion of

the total costs of BMP implementation. Full consideration of costs would include consideration of the opportunity costs (*e.g.*, the costs to the landowner of partial loss of use of property). EPA anticipates that such opportunity costs associated with BMP implementation would be borne by individual landowners, and that such costs may comprise the largest component of total costs associated with runoff abatement. To better understand the economic potential of implementation of a voluntary and decentralized runoff control program, EPA proposes to assess the opportunity costs associated with implementation of best management practices to abate the adverse effects of storm water runoff. The proposed survey would provide a means of gathering this information. It also would ask 10–12 non-invasive demographic questions, required for the proper statistical analysis of the data.

The survey would be conducted using six (6) groups of ten (10) residential landowners from the Shepherd Creek watershed. Participation would be completely voluntary. Residents who wish to participate in the study would be identified and recruited through a liaison from the Hamilton County Soil and Water Conservation District, who is familiar with the community. The survey would be conducted using a computer simulated nonuniform-price, sequential auction for the procurement of best management practices. Participants would be presented with a selection of best management practices that should be feasible for use on their actual parcel. Information regarding how each BMP should perform on their specific parcel, as well as the installation, operation, and maintenance costs, would be provided to the landowner. In the computer-simulated auction, participants who wish to implement BMPs would submit bids that consist of the size and type of the BMPs and the minimum compensation that the participant landowner would accept. The goal of the simulation would be to elicit the minimum compensation levels that individual landowners will accept in exchange for implementation of the best management practices. This information would then be used to estimate the minimum compensation that would likely be necessary to achieve control stormwater runoff through such on-site, structural best management practices.

Data gathered would be stored on U.S. Environmental Protection Agency (EPA) computer files that would protect the confidentiality of individual participants. Summary results would be made available to the public. An agency may not conduct or sponsor, and a person is not required to respond to, a collection of information unless it displays a currently valid OMB control number. The OMB control numbers for EPA's regulations in 40 CFR are listed in 40 CFR part 9.

The EPA solicits comments in this proposal to:

(i) Evaluate whether the proposed collection of information is necessary for the proper performance of the functions of the Agency, including whether the information will have practical utility;

(ii) Evaluate the accuracy of the Agency's estimate of the burden of the proposed collection of information, including the validity of the methodology and assumptions used;

(iii) Enhance the quality, utility, and clarity of the information to be collected; and

(iv) Minimize the burden of the collection of information on those who are to respond, including through the use of appropriate automated electronic, mechanical, or other technological collection techniques or other forms of information technology, *e.g.*, permitting electronic submission of responses.

Burden Statement: The total number of expected participants would be 60. The cost to participants would be their time, at an estimate total of 120 hours collectively. EPA would compensate participants for their participation at a minimum rate of $24.95 per hour. An additional bonus amount of compensation would vary with their performance in the auction. This is a commonly accepted practice used in experimental economics, in order to overcome hypothetical survey bias.

Burden means the total time, effort, or financial resources expended by persons to generate, maintain, retain, or disclose or provide information to or for a Federal agency. This includes the time needed to review instructions; develop, acquire, install, and utilize technology and systems for the purposes of collecting, validating, and verifying information, processing and maintaining information, and disclosing and providing information; adjust the existing ways to comply with any previously applicable instructions and requirements; train personnel to be able to respond to a collection of information; search data sources; complete and review the collection of information; and transmit or otherwise disclose the information.

Dated: July 5, 2005.

Sally C. Gutierrez,

Acting Director, National Risk Management Research Laboratory.

[FR Doc. 05–13783 Filed 7–12–05; 8:45 am]

BILLING CODE 6560–50–P

ENVIRONMENTAL PROTECTION AGENCY

[FRL–7935–3]

Receipt of Requests for Initial Certification of Predictive Emission Monitoring Systems

AGENCY: Environmental Protection Agency (EPA).

ACTION: Notice of data availability; request for public comment.

SUMMARY: Notice is hereby given of receipt of requests for initial certification of alternative monitoring systems for nitrogen oxides emissions under the Acid Rain Program or the NO_X Budget Program. The emissions monitoring regulations require EPA to provide notice of each request in the **Federal Register** and, following a public comment period of 60 days, to approve or disapprove the request. EPA has recently received requests for initial certification of nine alternative monitoring systems. All of these are predictive emission monitoring systems (PEMS). In order to be considered equivalent to a continuous emission monitoring system, each of these PEMS must meet the regulatory requirements for approval of an alternative monitoring system. EPA has conditionally approved three of these PEMS and is still reviewing the other six PEMS petitions.

DATES: Written comments on the proposed consent decree must be received by September 12, 2005.

ADDRESSES: Submit your comments, identified by docket ID number OAR–2005–0099, online at *http://www.epa.gov/edocket* (EPA's preferred method); by e-mail to *a-and-r-Docket@epa.gov*; mailed to EPA Docket Center, Environmental Protection Agency, Mailcode: 2822T, 1200 Pennsylvania Ave., NW., Washington, DC 20460–0001; or by hand delivery or courier to EPA Docket Center, EPA West, Room B108, 1301 Constitution Ave., NW., Washington, DC 20004, between 8:30 a.m. and 4:30 p.m. Monday through Friday, excluding legal holidays. Comments on a disk or CD–ROM should be formatted in Wordperfect or ASCII file, avoiding the use of special characters and any form of encryption, and may be mailed to the mailing address above.

FOR FURTHER INFORMATION CONTACT: John Schakenbach, Clean Air Markets Division (6204J), Office of Air and Radiation, U.S. Environmental Protection Agency, 1200 Pennsylvania Ave., NW., Washington, DC 20460, telephone: (202) 343–9158.

SUPPLEMENTARY INFORMATION:

I. Additional Information About the Certification Requests

Requests for initial certification of nitrogen oxides (NO_X) PEMS have been received from the following sources, each subject to either the Acid Rain Program or the NO_X Budget Program, or both:

MeadWestvaco (Alabama)

—1 gas-fired combustion turbine (conditionally approved); and
—1 gas-fired, pressurized furnace industrial boiler (conditionally approved)

Dearborn Industrial Generation (Michigan)

—3 gas-fired boilers; and
—3 gas-fired combustion turbines (one conditionally approved)

Braintree Electric Light Department (Massachusetts)

—1 gas- and oil-fired combustion turbine (Potter II Station)

Pursuant to § 75.20(f) of Title 40 of the Code of Federal Regulations, for a period of sixty (60) days following the date of publication of this notice, the Agency will receive written comments relating to the requests for initial certification of the nine PEMS. EPA may disapprove a request for initial certification of a PEMS if the comments disclose facts or considerations that indicate that such approval is inappropriate, improper, inadequate, or inconsistent with the requirements of the Act or if the request otherwise fails to meet the requirements of part 75, subpart E, available at: *http://www.epa.gov/airmarkets/monitoring/consolidated* then click on Volume 1.

II. Additional Information About Commenting on the Requests

A. How Can I Get a Copy of the Requests?

EPA has established an official public docket for this action under Docket ID No. OAR–2005–0099, which contains a copy of the requests. The official public docket is available for public viewing at the Air Docket in the EPA Docket Center, EPA West, Room B108, 1301 Constitution Ave., NW., Washington, DC 20004. The EPA Docket Center Public Reading Room is open from 8:30 a.m. to 4:30 p.m., Monday through Friday, excluding legal holidays. The telephone number for the Public Reading Room is (202) 566–1744, and the telephone number for the Air Docket is (202) 566–1742.

An electronic version of the public docket is available through EPA's electronic public docket and comment system, EPA Dockets. You may use EPA Dockets at *http://www.epa.gov/edocket/* to submit or view public comments, access the index listing of the contents of the official public docket, and access those documents in the public docket that are available electronically. Once in the system, select ''search'', and then key in the appropriate docket identification number.

It is important to note that EPA's policy is that public comments, whether submitted electronically or in paper, will be made available for public viewing in EPA's electronic public docket as EPA receives them and without change, unless the comment contains copyrighted material, confidential business information, or other information whose disclosure is restricted by statute. Information claimed as confidential business information and other information whose disclosure is restricted by statute is not included in the official public docket or in EPA's electronic public docket. EPA's policy is that copyrighted material, including copyrighted material contained in a public comment, will not be placed in EPA's electronic public docket but will be available only in printed, paper form in the official public docket. Although not all docket materials may be available electronically, you may still access any of the publicly available docket materials through the EPA Docket Center.

B. How and to Whom Do I Submit Comments?

You may submit comments as provided in the **ADDRESSES** section. Please ensure that your comments are submitted within the specified comment period. Comments received after the close of the comment period will be marked ''late.'' EPA is not required to consider these late comments.

If you submit an electronic comment, EPA recommends that you include your name, mailing address, and an e-mail address or other contact information in the body of your comment and with any disk or CD–ROM you submit. This ensures that you can be identified as the submitter of the comment and allows EPA to contact you in case EPA cannot read your comment due to technical difficulties or needs further information on the substance of your comment. Any identifying or contact information provided in the body of a comment will be included as part of the comment that is placed in the official public docket, and made available in EPA's electronic public docket. If EPA cannot read your comment due to technical difficulties and cannot contact you for clarification, EPA may not be able to consider your comment.

Your use of EPA's electronic public docket to submit comments to EPA electronically is EPA's preferred method for receiving comments. The electronic public docket system is an ''anonymous access'' system, which means EPA will not know your identity, e-mail address, or other contact information unless you provide it in the body of your comment. In contrast to EPA's electronic public docket, EPA's electronic mail (e-mail) system is not an ''anonymous access'' system. If you send an e-mail comment directly to the Docket without going through EPA's electronic public docket, your e-mail address is automatically captured and included as part of the comment that is placed in the official public docket, and made available in EPA's electronic public docket.

Dated: June 14, 2005.

Sam Napolitano,

Director, Clean Air Markets Division, Office of Air and Radiation.

[FR Doc. 05–13784 Filed 7–12–05; 8:45 am]

BILLING CODE 6560–50–P

ENVIRONMENTAL PROTECTION AGENCY

[Docket Number ORD–2005–0023; FRL–7938–1]

Board of Scientific Counselors, Global Change Subcommittee Meetings

AGENCY: Environmental Protection Agency (EPA).

ACTION: Notice of meetings.

SUMMARY: Pursuant to the Federal Advisory Committee Act, Public Law 92–463, the Environmental Protection Agency, Office of Research and Development (ORD), announces three meetings of the Board of Scientific Counselors (BOSC) Global Change Subcommittee. The conference calls and face-to-face meeting will focus on reviewing the Office of Research and Development's Global Change Research Program.

DATES: Two teleconference call meetings will be held, the first on Thursday, August 4, 2005, from 10 a.m. to 12 noon, and the second on Tuesday, September 13, 2005, from 10 a.m. to 12 noon. A

face-to-face meeting will be held beginning Monday, September 26, 2005 (8 a.m. to 5:30 p.m.), continuing on Tuesday, September 27, 2005 (9 a.m. to 5:30 p.m.), and concluding on Wednesday, September 28, 2005 (8:30 a.m. to 5 p.m.). All times noted are eastern daylight time. Meetings may adjourn early if all business is completed.

ADDRESSES: Conference calls: Participation in the conference calls will be by teleconference only—meeting rooms will not be used. Members of the public may obtain the call-in number and access code for the teleconference meeting from Janet Gamble, whose contact information is listed under the **FOR FURTHER INFORMATION CONTACT** section of this notice. Face-to-Face Meeting: The face-to-face meeting will be held at the Hilton Alexandria Old Town located at 1767 King Street, Alexandria, Virginia, United States 22314.

Document Availability

Draft agendas for the meetings are available from Janet Gamble, whose contact information is listed under the **FOR FURTHER INFORMATION CONTACT** section of this notice. Requests for the draft agendas will be accepted up to 2 business days prior to each conference call/meeting date. The draft agendas also can be viewed through EDOCKET, as provided in Unit I.A. of the **SUPPLEMENTARY INFORMATION** section.

Any member of the public interested in making an oral presentation at one of the conference calls or at the face-to-face meeting may contact Janet Gamble, whose contact information is listed under the **FOR FURTHER INFORMATION CONTACT** section of this notice. Requests for making oral presentations will be accepted up to 2 business days prior to each conference call/meeting date. In general, each individual making an oral presentation will be limited to a total of three minutes.

Submitting Comments

Written comments may be submitted electronically, by mail, or through hand delivery/courier. Follow the detailed instructions as provided in Unit I.B. of this section. Written comments will be accepted up to 2 business days prior to each conference call/meeting date.

FOR FURTHER INFORMATION CONTACT: Janet Gamble, Designated Federal Officer, Environmental Protection Agency, Office of Research and Development, Mail Code 8601N, 1200 Pennsylvania Ave NW., Washington, DC, 20460; telephone and voice mail (202) 564–3387; fax (202) 564–2018; e-mail *gamble.janet@epa.gov.*

SUPPLEMENTARY INFORMATION:

I. General Information

This notice announces three meetings of the BOSC Global Change Subcommittee. The purpose of the meetings are to evaluate EPA's Global Change Research Program. Proposed agenda items for the conference calls include, but are not limited to: Charge questions, objective of program reviews, background of the U.S. EPA's Global Change Research Program, writing assignments, and planning for the face-to-face meeting. Proposed agenda items for the face-to-face meeting include, but are not limited to: presentations by key EPA staff involved in the Global Change Research Program, poster sessions on ORD's Global Change research, and preparation of the draft report. The conference calls and the face-to-face meeting are open to the public.

Information on Services for the Handicapped: For information on access or services for individuals with disabilities, please contact Janet Gamble at (202) 564–3387 or *gamble.janet@epa.gov.* To request accommodation of a disability, please contact Janet Gamble, preferably at least 10 days prior to the meeting, to give EPA as much time as possible to process your request.

A. How Can I Get Copies of Related Information?

1. Docket. EPA has established an official public docket for this action under Docket ID No. ORD–2005–0023. The official public docket consists of the documents specifically referenced in this action, any public comments received, and other information related to this action. Documents in the official public docket are listed in the index in EPA's electronic public docket and comment system, EDOCKET. Documents are available either electronically or in hard copy. Electronic documents may be viewed through EDOCKET. Hard copies of the draft agendas may be viewed at the Board of Scientific Counselors, Global Change Meetings Docket in the EPA Docket Center (EPA/DC), EPA West, Room B102, 1301 Constitution Ave., NW., Washington, DC. The EPA Docket Center Public Reading Room is open from 8:30 a.m. to 4:30 p.m., Monday through Friday, excluding legal holidays. The telephone number for the Public Reading Room is (202) 566–1744, and the telephone number for the ORD Docket is (202) 566–1752.

2. Electronic Access. You may access this **Federal Register** document electronically through the EPA Internet under the **Federal Register** listings at *http://www.epa.gov/fedrgstr/.* An electronic version of the public docket is available through EDOCKET. You may use EDOCKET at *http://www.epa.gov/edocket/* to submit or view public comments, access the index listing of the contents of the official public docket, and to access those documents in the public docket that are available electronically. Once in the system, select ''search,'' then key in the appropriate docket identification number (ORD–2005–0023).

For those wishing to make public comments, it is important to note that EPA's policy is that comments, whether submitted electronically or on paper, will be made available for public viewing in EPA's electronic public docket as EPA receives them and without change, unless the comment contains copyrighted material, confidential business information (CBI), or other information whose disclosure is restricted by statute. When EPA identifies a comment containing copyrighted material, EPA will provide a reference to that material in the version of the comment that is placed in EPA's electronic public docket. The entire printed comment, including the copyrighted material, will be available in the public docket.

Public comments submitted on computer disks mailed or delivered to the docket will be transferred to EPA's electronic public docket. Written public comments mailed or delivered to the Docket will be scanned and placed in EPA's electronic public docket.

B. How and To Whom Do I Submit Comments?

You may submit comments electronically, by mail, or through hand delivery/courier. To ensure proper receipt by EPA, identify the appropriate docket identification number (ORD–2005–0023) in the subject line on the first page of your comment. Please ensure that your comments are submitted within the specified comment period.

1. Electronically. If you submit an electronic comment as prescribed below, EPA recommends that you include your name, mailing address, and an e-mail address or other contact information in the body of your comment. Also include this contact information on the outside of any disk or CD ROM you submit, and in any cover letter accompanying the disk or CD ROM. This ensures that you can be identified as the submitter of the comment, and it allows EPA to contact you if further information on the

substance of the comment is needed or if your comment cannot be read due to technical difficulties. EPA's policy is that EPA will not edit your comment, and any identifying or contact information provided in the body of a comment will be included as part of the comment placed in the official public docket and made available in EPA's electronic public docket. If EPA cannot read your comment due to technical difficulties and cannot contact you for clarification, EPA may not be able to consider your comment.

i. EDOCKET. Your use of EPA's electronic public docket to submit comments to EPA electronically is EPA's preferred method for receiving comments. Go directly to EDOCKET at *http://www.epa.gov/edocket/,* and follow the online instructions for submitting comments. To access EPA's electronic public docket from the EPA Internet Home Page, *http://www.epa.gov,* select ''Information Sources,'' ''Dockets,'' and ''EDOCKET.'' Once in the system, select ''search,'' and then key in Docket ID No. ORD–2005–0023. The system is an anonymous access system, which means EPA will not know your identity, e-mail address, or other contact information unless you provide it in the body of your comment.

ii. E-mail. Comments may be sent by electronic mail (e-mail) to *ORD.Docket@epa.gov,* Attention Docket ID No. ORD–2005–0023. In contrast to EPA's electronic public docket, EPA's e-mail system is not an anonymous access system. If you send an e-mail comment directly to the docket without going through EPA's electronic public docket, EPA's e-mail system automatically captures your e-mail address. E-mail addresses that are automatically captured by EPA's e-mail system are included as part of the comment that is placed in the official public docket, and made available in EPA's electronic public docket.

iii. Disk or CD ROM. You may submit comments on a disk or CD ROM mailed to the mailing address identified in Unit I.B.2. These electronic submissions will be accepted in Word, WordPerfect or rich text files. Avoid the use of special characters and any form of encryption.

2. By Mail. Send your comments to: U.S. Environmental Protection Agency, ORD Docket, EPA Docket Center (EPA/DC), Mailcode: 28221T, 1200 Pennsylvania Ave., NW., Washington, DC 20460, Attention Docket ID No. ORD–2005–0023.

3. By Hand Delivery or Courier. Deliver your comments to: EPA Docket Center (EPA/DC), Room B102, EPA West Building, 1301 Constitution Avenue, NW., Washington, DC, Attention Docket ID No. ORD–2005–0023 (note: this is not a mailing address). Such deliveries are only accepted during the docket's normal hours of operation as identified in Unit I.A.1.

Dated: July 7, 2005.

Jeffery Morris,

Acting Director, Office of Science Policy.

[FR Doc. 05–13777 Filed 7–12–05; 8:45 am]

BILLING CODE 6560–50–P

ENVIRONMENTAL PROTECTION AGENCY

[OPP–2005–0125; FRL–7722–1]

Metam Sodium Risk Assessment; Notice of Availability

AGENCY: Environmental Protection Agency (EPA).

ACTION: Notice.

SUMMARY: This notice announces the availability of EPA's human health risk assessment and related documents for the pesticide metam sodium, and opens a public comment period on these documents. EPA is developing a Reregistration Eligibility Decision (RED) for metam sodium through the full, 6-Phase public participation process that the Agency uses to involve the public in developing pesticide reregistration and tolerance reassessment decisions. EPA also is concurrently assessing the risks of five other soil fumigant pesticides to ensure that its assessment approaches are consistent and to ensure that risk trade offs and economic outcomes can be adequately predicted in reaching risk management decisions. Through these programs, EPA is ensuring that all pesticides meet current health and safety standards.

DATES: Comments, identified by docket identification (ID) number OPP–2005–0125, must be received on or before September 12, 2005.

ADDRESSES: Comments may be submitted electronically, by mail, or through hand delivery/courier. Follow the detailed instructions as provided in Unit I. of the **SUPPLEMENTARY INFORMATION**.

FOR FURTHER INFORMATION CONTACT: Mark Seaton, Special Review and Reregistration Division (7508C), Office of Pesticide Programs, Environmental Protection Agency, 1200 Pennsylvania Ave., NW., Washington, DC 20460–0001; telephone number: (703) 306–0469; fax number: (703) 308–8041; e-mail address:*seaton.mark@epa.gov*.

SUPPLEMENTARY INFORMATION:

I. General Information

A. Does this Action Apply to Me?

This action is directed to the public in general, and may be of interest to a wide range of stakeholders including environmental, human health, and agricultural advocates; the chemical industry; pesticide users; and members of the public interested in the sale, distribution, or use of pesticides. Since others also may be interested, the Agency has not attempted to describe all the specific entities that may be affected by this action. If you have any questions regarding the applicability of this action to a particular entity, consult the person listed under **FOR FURTHER INFORMATION CONTACT**.

B. How Can I Get Copies of this Document and Other Related Information?

1. *Docket.* EPA has established an official public docket for this action under Docket ID Number OPP–2005–0125. The official public docket consists of the documents specifically referenced in this action, any public comments received, and other information related to this action. Although a part of the official docket, the public docket does not include Confidential Business Information (CBI) or other information whose disclosure is restricted by statute. The official public docket is the collection of materials that is available for public viewing at the Public Information and Records Integrity Branch (PIRIB), Rm. 119, Crystal Mall #2, 1801 S. Bell St., Arlington, VA. This docket facility is open from 8:30 a.m. to 4 p.m., Monday through Friday, excluding legal holidays. The docket telephone number is (703) 305–5805.

Additional support documents can viewed at EPA's electronic public docket under Docket ID Number OPP–2004–0159. On June 2, 2004, the Agency previously opened a docket announcing the availability of the human health and environmental fate and effects risk assessments for metam sodium. You may wish to review these additional support documents, but the Agency is not asking for comments on these documents, nor accepting comments under Docket ID Number OPP–2004–0159. The Agency is making available an updated human health risk assessment under Docket ID Number OPP–2005–0125 and is seeking comments on this risk assessment.

2. *Electronic access.* You may access this **Federal Register** document electronically through the EPA Internet under the ''**Federal Register**'' listings at *http://www.epa.gov/fedrgstr/*.

An electronic version of the public docket is available through EPA's electronic public docket and comment system, EPA Dockets. You may use EPA Dockets at *http://www.epa.gov/edocket/* to submit or view public comments, access the index listing of the contents of the official public docket, and to access those documents in the public docket that are available electronically. Once in the system, select ''search,'' then key in the appropriate docket ID number.

Certain types of information will not be placed in the EPA Dockets. Information claimed as CBI and other information whose disclosure is restricted by statute, which is not included in the official public docket, will not be available for public viewing in EPA's electronic public docket. EPA's policy is that copyrighted material will not be placed in EPA's electronic public docket but will be available only in printed, paper form in the official public docket. To the extent feasible, publicly available docket materials will be made available in EPA's electronic public docket. When a document is selected from the index list in EPA Dockets, the system will identify whether the document is available for viewing in EPA's electronic public docket. Although not all docket materials may be available electronically, you may still access any of the publicly available docket materials through the docket facility identified in Unit I.B.1. EPA intends to work towards providing electronic access to all of the publicly available docket materials through EPA's electronic public docket.

For public commenters, it is important to note that EPA's policy is that public comments, whether submitted electronically or in paper, will be made available for public viewing in EPA's electronic public docket as EPA receives them and without change, unless the comment contains copyrighted material, CBI, or other information whose disclosure is restricted by statute. When EPA identifies a comment containing copyrighted material, EPA will provide a reference to that material in the version of the comment that is placed in EPA's electronic public docket. The entire printed comment, including the copyrighted material, will be available in the public docket.

Public comments submitted on computer disks that are mailed or delivered to the docket will be transferred to EPA's electronic public docket. Public comments that are mailed or delivered to the docket will be scanned and placed in EPA's electronic public docket. Where practical, physical objects will be photographed, and the photograph will be placed in EPA's electronic public docket along with a brief description written by the docket staff.

C. How and to Whom Do I Submit Comments?

You may submit comments electronically, by mail, or through hand delivery/courier. To ensure proper receipt by EPA, identify the appropriate docket ID number in the subject line on the first page of your comment. Please ensure that your comments are submitted within the specified comment period. Comments received after the close of the comment period will be marked ''late.'' EPA is not required to consider these late comments. If you wish to submit CBI or information that is otherwise protected by statute, please follow the instructions in Unit I.D. Do not use EPA Dockets or e-mail to submit CBI or information protected by statute.

1. *Electronically*. If you submit an electronic comment as prescribed in this unit, EPA recommends that you include your name, mailing address, and an e-mail address or other contact information in the body of your comment. Also include this contact information on the outside of any disk or CD ROM you submit, and in any cover letter accompanying the disk or CD ROM. This ensures that you can be identified as the submitter of the comment and allows EPA to contact you in case EPA cannot read your comment due to technical difficulties or needs further information on the substance of your comment. EPA's policy is that EPA will not edit your comment, and any identifying or contact information provided in the body of a comment will be included as part of the comment that is placed in the official public docket, and made available in EPA's electronic public docket. If EPA cannot read your comment due to technical difficulties and cannot contact you for clarification, EPA may not be able to consider your comment.

i. *EPA Dockets*. Your use of EPA's electronic public docket to submit comments to EPA electronically is EPA's preferred method for receiving comments. Go directly to EPA Dockets at *http://www.epa.gov/edocket/*, and follow the online instructions for submitting comments. Once in the system, select ''search,'' and then key in Docket ID Number OPP–2005–0125. The system is an ''anonymous access'' system, which means EPA will not know your identity, e-mail address, or other contact information unless you provide it in the body of your comment.

ii. *E-mail*. Comments may be sent by e-mail to *opp-docket@epa.gov*, Attention: Docket ID Number OPP–2005–0125. In contrast to EPA's electronic public docket, EPA's e-mail system is not an ''anonymous access'' system. If you send an e-mail comment directly to the docket without going through EPA's electronic public docket, EPA's e-mail system automatically captures your e-mail address. E-mail addresses that are automatically captured by EPA's e-mail system are included as part of the comment that is placed in the official public docket, and made available in EPA's electronic public docket.

iii. *Disk or CD ROM*. You may submit comments on a disk or CD ROM that you mail to the mailing address identified in Unit I.C.2. These electronic submissions will be accepted in WordPerfect or ASCII file format. Avoid the use of special characters and any form of encryption.

2. *By mail*. Send your comments to: Public Information and Records Integrity Branch (PIRIB) (7502C), Office of Pesticide Programs (OPP), Environmental Protection Agency, 1200 Pennsylvania Ave., NW., Washington, DC 20460–0001, Attention: Docket ID Number OPP–2005–0125.

3. *By hand delivery or courier*. Deliver your comments to: Public Information and Records Integrity Branch (PIRIB), Office of Pesticide Programs (OPP), Environmental Protection Agency, Rm. 119, Crystal Mall #2, 1801 S. Bell St., Arlington, VA, Attention: Docket ID Number OPP–2005–0125. Such deliveries are only accepted during the docket's normal hours of operation as identified in Unit I.B.1.

D. How Should I Submit CBI to the Agency?

Do not submit information that you consider to be CBI electronically through EPA's electronic public docket or by e-mail. You may claim information that you submit to EPA as CBI by marking any part or all of that information as CBI (if you submit CBI on disk or CD ROM, mark the outside of the disk or CD ROM as CBI and then identify electronically within the disk or CD ROM the specific information that is CBI). Information so marked will not be disclosed except in accordance with procedures set forth in 40 CFR part 2.

In addition to one complete version of the comment that includes any information claimed as CBI, a copy of the comment that does not contain the information claimed as CBI must be submitted for inclusion in the public docket and EPA's electronic public docket. If you submit the copy that does

not contain CBI on disk or CD ROM, mark the outside of the disk or CD ROM clearly that it does not contain CBI. Information not marked as CBI will be included in the public docket and EPA's electronic public docket without prior notice. If you have any questions about CBI or the procedures for claiming CBI, please consult the person listed under **FOR FURTHER INFORMATION CONTACT**.

E. What Should I Consider as I Prepare My Comments for EPA?

You may find the following suggestions helpful for preparing your comments:

1. Explain your views as clearly as possible.
2. Describe any assumptions that you used.
3. Provide any technical information and/or data you used that support your views.
4. If you estimate potential burden or costs, explain how you arrived at your estimate.
5. Provide specific examples to illustrate your concerns.
6. Offer alternatives.
7. Make sure to submit your comments by the comment period deadline identified.
8. To ensure proper receipt by EPA, identify the appropriate docket ID number in the subject line on the first page of your response. It would also be helpful if you provided the name, date, and **Federal Register** citation related to your comments.

II. Background

A. What Action is the Agency Taking?

EPA is making available the human health risk assessment for metam sodium, and metam potassium. They are non-selective pre-plant soil fumigants with fungicidal, herbicidal, insecticidal, and nematicidal properties. Metam sodium is one of the most widely used agricultural pesticides in the U.S. and is presently registered on a wide variety of crop groups including: root and tuber vegetables; bulb vegetables; leafy vegetables; Brassica (cole) leafy vegetables; legume vegetables; fruiting vegetables; cucurbit vegetables; citrus fruits; pome fruits; stone fruits; berries; tree nuts; cereal grains; nongrass livestock feeds; and herbs and spices. Metam sodium may be applied to plant beds as a soil drench treatment. It may also be applied to field or row crops during pre-plant and postharvest stages via chemigation, soil broadcast treatment, soil band treatment, soil-incorporated treatment, and soil-injection treatment. An estimated 51 million pounds of metam sodium is applied annually. Lesser amounts of metam potassium are used in the U.S.; unless further qualified or specified, use of the term ''metam sodium'' should be assumed to also include ''metam potassium.''

Metam sodium and metam potassium are converted to methyl isothiocyanate (MITC) in the environment, particularly in the presence of moisture (such as in soil after application). It is MITC that performs the fumigating activity.

The volatility of metam sodium in the environment and results of metabolism studies in plants assure that there is no reasonable expectation of finite residues to be incurred in/on any raw agricultural commodity when these products are applied according to label directions. Therefore, this fumigant does not require food tolerances.

EPA is providing an opportunity, through this notice, for interested parties to provide comments and input on the Agency's risk assessment for metam sodium. Such comments and input could address, for example, the availability of additional data to further refine the risk assessments, or information about specific use practices for crops that are produced using metam sodium. For example, the following information would be helpful to EPA in characterizing regional and crop differences in use practices and possible effects on potential risk. When providing information to the Agency, consider providing pictures or video footage to help clarify your comment:

- Crop.
- Fumigant use.
- Average acres grown per enterprise.
- Maximum acres fumigated per day.
- Percent of the acres grown that are fumigated.
- Typical application rate (lb a.i./acre).
- Minimum application rate used (lb a.i./acre)(for high pest pressure situations).
- Time of year that soil is fumigated.
- Fumigation cycle (every crop cycle, 1 time/year, 1 time/2 years).
- Target pests (by category or specific pests).
- Method of application (e.g., chemigation, soil injection, specific equipment used, etc.)
- Methods or actions taken to reduce emissions (e.g., polyethylene tarps, water seal, or soil cap).
- Could high-density polyethylene (HDPE) or high barrier tarps be used on this crop?
- Time between treatment and next production activity (e.g., time until planting).
- Typical crops following the fumigated crop (only if they benefit from the fumigation).
- Regulatory restrictions in your area on this fumigant or an alternative fumigant (such as weather restrictions).
- Soil restrictions on this fumigant or an alternative fumigant.
- Any restrictions or concerns about minimum soil temperature, hilly terrain, etc.
- Best available alternative (another fumigant or strategy such as leaving land fallow, etc.)
- Could the use of different fumigants be alternated to achieve similar efficacy (e.g., metam sodium followed by 1,3-D)? Specify how.
- Yield or quality impacts that are likely to result from moving to the next best available alternative (i.e., change in commodity price or grade).
- Would moving to the next best alternative impact key market windows? How?
- Cost per acre of active ingredient.
- Cost per acre of other fumigation inputs (e.g., irrigation and equipment).
- Is there a crop budget available for your area and crop?
- Do you know of any other contacts or other sources of information for this crop that could provide information on acreage, prices, pests, etc.?
- Are there non-chemical alternatives that can be used in place of fumigants? Describe use.

EPA seeks to achieve environmental justice, the fair treatment and meaningful involvement of all people, regardless of race, color, national origin, or income, in the development, implementation, and enforcement of environmental laws, regulations, and policies. To help address potential environmental justice issues, the Agency seeks information on any groups or segments of the population who, as a result of their location, cultural practices, or other factors, may have atypical, unusually high exposure to metam sodium, compared to the general population.

EPA is applying the principles of public participation to all pesticides undergoing reregistration and tolerance reassessment. The Agency's Pesticide Tolerance Reassessment and Reregistration; Public Participation Process, published in the **Federal Register** on May 14, 2004, (69 FR 26819)(FRL–7357–9) explains that in conducting these programs, EPA is tailoring its public participation process to be commensurate with the level of risk, extent of use, complexity of issues, and degree of public concern associated with each pesticide. EPA plans to

review metam sodium through the full, 6-Phase public participation process.

Comments should be limited to issues raised within the risk assessment and associated documents. Failure to comment on any such issues as part of this opportunity will not limit a commenter's opportunity to participate in any later notice and comment processes on this matter. All comments should be submitted using the methods in Unit I. of the **SUPPLEMENTARY INFORMATION**, and must be received by EPA on or before the closing date. Comments will become part of the Agency Docket for metam sodium. Comments received after the close of the comment period will be marked ''late.'' EPA is not required to consider these late comments.

B. What is the Agency's Authority for Taking this Action?

Section 4(g)(2) of FIFRA as amended directs that, after submission of all data concerning a pesticide active ingredient, ''the Administrator shall determine whether pesticides containing such active ingredient are eligible for reregistration,'' before calling in product specific data on individual end-use products and either reregistering products or taking other ''appropriate regulatory action.''

Section 408(q) of the FFDCA, 21 U.S.C. 346a(q), requires EPA to review tolerances and exemptions for pesticide residues in effect as of August 2, 1996, to determine whether the tolerance or exemption meets the requirements of section 408(b)(2) or (c)(2) of FFDCA. This review is to be completed by August 3, 2006.

List of Subjects

Environmental protection, Pesticides and pests.

Dated: June 29, 2005.

Debra Edwards,

Director, Special Review and Reregistration Division, Office of Pesticide Programs.

[FR Doc. 05–13345 Filed 7–12–05; 8:45 am]

BILLING CODE 6560–50–S

ENVIRONMENTAL PROTECTION AGENCY

[OPP–2005–0123; FRL–7721–3]

Methyl Bromide Risk Assessments for Fumigant Pesticide; Notice of Availability

AGENCY: Environmental Protection Agency (EPA).

ACTION: Notice.

SUMMARY: This notice announces the availability of EPA's human health and environmental fate and effects risk assessments and related documents for the fumigant methyl bromide, and opens a public comment period on these documents. EPA is developing the Reregistration Eligibility Decision (RED) for methyl bromide through the full, 6–Phase public participation process that the Agency uses to involve the public in developing pesticide reregistration and tolerance reassessment decisions. EPA also is concurrently assessing the risks of five other soil fumigant pesticides to ensure that its assessment approaches are consistent, and to ensure that risk tradeoffs and economic outcomes can be adequately predicted in reaching risk management decisions. Through these programs, EPA is ensuring that all pesticides meet current health and safety standards.

DATES: Comments, identified by docket identification (ID) number OPP–2005–0123, must be received on or before September 12, 2005.

ADDRESSES: Comments may be submitted electronically, by mail, or through hand delivery/courier. Follow the detailed instructions as provided in Unit I. of the **SUPPLEMENTARY INFORMATION**.

FOR FURTHER INFORMATION CONTACT: Susan Bartow, Special Review and Reregistration Division (7508C), Office of Pesticide Programs, Environmental Protection Agency, 1200 Pennsylvania Ave., NW., Washington, DC 20460–0001; telephone number: (703) 603–0065; fax number: (703) 308–8041; e-mail address: *bartow.susan@epa.gov*.

SUPPLEMENTARY INFORMATION:

I. General Information

A. Does this Action Apply to Me?

This action is directed to the public in general, and may be of interest to a wide range of stakeholders including environmental, human health, and agricultural advocates; the chemical industry; pesticide users; and members of the public interested in the sale, distribution, or use of pesticides. Since others also may be interested, the Agency has not attempted to describe all the specific entities that may be affected by this action. If you have any questions regarding the applicability of this action to a particular entity, consult the person listed under **FOR FURTHER INFORMATION CONTACT**.

B. How Can I Get Copies of this Document and Other Related Information?

1. *Docket*. EPA has established an official public docket for this action under docket ID number OPP–2005–0123. The official public docket consists of the documents specifically referenced in this action, any public comments received, and other information related to this action. Although a part of the official docket, the public docket does not include Confidential Business Information (CBI) or other information whose disclosure is restricted by statute. The official public docket is the collection of materials that is available for public viewing at the Public Information and Records Integrity Branch (PIRIB), Rm. 119, Crystal Mall #2, 1801 S. Bell St., Arlington, VA. This docket facility is open from 8:30 a.m. to 4 p.m., Monday through Friday, excluding legal holidays. The docket telephone number is (703) 305–5805.

2. *Electronic access*. You may access this **Federal Register** document electronically through the EPA Internet under the ''**Federal Register**'' listings at *http://www.epa.gov/fedrgstr/*.

An electronic version of the public docket is available through EPA's electronic public docket and comment system, EPA Dockets. You may use EPA Dockets at *http://www.epa.gov/edocket/* to submit or view public comments, access the index listing of the contents of the official public docket, and to access those documents in the public docket that are available electronically. Once in the system, select ''search,'' then key in the appropriate docket ID number.

Certain types of information will not be placed in the EPA Dockets. Information claimed as CBI and other information whose disclosure is restricted by statute, which is not included in the official public docket, will not be available for public viewing in EPA's electronic public docket. EPA's policy is that copyrighted material will not be placed in EPA's electronic public docket but will be available only in printed, paper form in the official public docket. To the extent feasible, publicly available docket materials will be made available in EPA's electronic public docket. When a document is selected from the index list in EPA Dockets, the system will identify whether the document is available for viewing in EPA's electronic public docket. Although not all docket materials may be available electronically, you may still access any of the publicly available docket materials through the docket facility identified in Unit I.B.1. EPA intends to work towards providing electronic access to all of the publicly available docket materials through EPA's electronic public docket.

For public commenters, it is important to note that EPA's policy is

that public comments, whether submitted electronically or in paper, will be made available for public viewing in EPA's electronic public docket as EPA receives them and without change, unless the comment contains copyrighted material, CBI, or other information whose disclosure is restricted by statute. When EPA identifies a comment containing copyrighted material, EPA will provide a reference to that material in the version of the comment that is placed in EPA's electronic public docket. The entire printed comment, including the copyrighted material, will be available in the public docket.

Public comments submitted on computer disks that are mailed or delivered to the docket will be transferred to EPA's electronic public docket. Public comments that are mailed or delivered to the docket will be scanned and placed in EPA's electronic public docket. Where practical, physical objects will be photographed, and the photograph will be placed in EPA's electronic public docket along with a brief description written by the docket staff.

C. How and to Whom Do I Submit Comments?

You may submit comments electronically, by mail, or through hand delivery/courier. To ensure proper receipt by EPA, identify the appropriate docket ID number in the subject line on the first page of your comment. Please ensure that your comments are submitted within the specified comment period. Comments received after the close of the comment period will be marked ''late.'' EPA is not required to consider these late comments. If you wish to submit CBI or information that is otherwise protected by statute, please follow the instructions in Unit I.D. Do not use EPA Dockets or e-mail to submit CBI or information protected by statute.

1. *Electronically*. If you submit an electronic comment as prescribed in this unit, EPA recommends that you include your name, mailing address, and an e-mail address or other contact information in the body of your comment. Also include this contact information on the outside of any disk or CD ROM you submit, and in any cover letter accompanying the disk or CD ROM. This ensures that you can be identified as the submitter of the comment and allows EPA to contact you in case EPA cannot read your comment due to technical difficulties or needs further information on the substance of your comment. EPA's policy is that EPA will not edit your comment, and any identifying or contact information provided in the body of a comment will be included as part of the comment that is placed in the official public docket, and made available in EPA's electronic public docket. If EPA cannot read your comment due to technical difficulties and cannot contact you for clarification, EPA may not be able to consider your comment.

i. *EPA Dockets*. Your use of EPA's electronic public docket to submit comments to EPA electronically is EPA's preferred method for receiving comments. Go directly to EPA Dockets at *http://www.epa.gov/edocket/*, and follow the online instructions for submitting comments. Once in the system, select ''search,'' and then key in docket ID number OPP–2005–0123. The system is an ''anonymous access'' system, which means EPA will not know your identity, e-mail address, or other contact information unless you provide it in the body of your comment.

ii. *E-mail*. Comments may be sent by e-mail to *opp-docket@epa.gov*, Attention: Docket ID Number OPP–2005–0123. In contrast to EPA's electronic public docket, EPA's e-mail system is not an ''anonymous access'' system. If you send an e-mail comment directly to the docket without going through EPA's electronic public docket, EPA's e-mail system automatically captures your e-mail address. E-mail addresses that are automatically captured by EPA's e-mail system are included as part of the comment that is placed in the official public docket, and made available in EPA's electronic public docket.

iii. *Disk or CD ROM*. You may submit comments on a disk or CD ROM that you mail to the mailing address identified in Unit I.C.2. These electronic submissions will be accepted in WordPerfect or ASCII file format. Avoid the use of special characters and any form of encryption.

2. *By mail*. Send your comments to: Public Information and Records Integrity Branch (PIRIB) (7502C), Office of Pesticide Programs (OPP), Environmental Protection Agency, 1200 Pennsylvania Ave., NW., Washington, DC 20460–0001, Attention: Docket ID Number OPP–2005–0123.

3. *By hand delivery or courier*. Deliver your comments to: Public Information and Records Integrity Branch (PIRIB), Office of Pesticide Programs (OPP), Environmental Protection Agency, Rm. 119, Crystal Mall #2, 1801 S. Bell St., Arlington, VA, Attention: Docket ID Number OPP–2005–0123. Such deliveries are only accepted during the docket's normal hours of operation as identified in Unit I.B.1.

D. How Should I Submit CBI to the Agency?

Do not submit information that you consider to be CBI electronically through EPA's electronic public docket or by e-mail. You may claim information that you submit to EPA as CBI by marking any part or all of that information as CBI (if you submit CBI on disk or CD ROM, mark the outside of the disk or CD ROM as CBI and then identify electronically within the disk or CD ROM the specific information that is CBI). Information so marked will not be disclosed except in accordance with procedures set forth in 40 CFR part 2.

In addition to one complete version of the comment that includes any information claimed as CBI, a copy of the comment that does not contain the information claimed as CBI must be submitted for inclusion in the public docket and EPA's electronic public docket. If you submit the copy that does not contain CBI on disk or CD ROM, mark the outside of the disk or CD ROM clearly that it does not contain CBI. Information not marked as CBI will be included in the public docket and EPA's electronic public docket without prior notice. If you have any questions about CBI or the procedures for claiming CBI, please consult the person listed under **FOR FURTHER INFORMATION CONTACT**.

E. What Should I Consider as I Prepare My Comments for EPA?

You may find the following suggestions helpful for preparing your comments:

1. Explain your views as clearly as possible.
2. Describe any assumptions that you used.
3. Provide any technical information and/or data you used that support your views.
4. If you estimate potential burden or costs, explain how you arrived at your estimate.
5. Provide specific examples to illustrate your concerns.
6. Offer alternatives.
7. Make sure to submit your comments by the comment period deadline identified.
8. To ensure proper receipt by EPA, identify the appropriate docket ID number in the subject line on the first page of your response. It would also be helpful if you provided the name, date, and **Federal Register** citation related to your comments.

II. Background

A. What Action is the Agency Taking?

EPA is making available the human health and environmental fate and

effects risk assessments for methyl bromide. Methyl bromide is a broad-spectrum fumigant chemical that can be used as an acaricide, antimicrobial, fungicide, herbicide, insecticide, nematicide, and vertebrate control agent. The most prevalent use pattern is as a soil fumigant; however, it is also used as a structural fumigant and for post harvest treatment of commodities. The Agency developed these risk assessments as part of its public process for making pesticide reregistration eligibility and tolerance reassessment decisions. Through these programs, EPA is ensuring that pesticides meet current standards under the Federal Insecticide, Fungicide, and Rodenticide Act (FIFRA) and the Federal Food, Drug, and Cosmetic Act (FFDCA), as amended by the Food Quality Protection Act of 1996 (FQPA).

Methyl bromide is primarily used on terrestrial agricultural sites but other commonly treated sites include indoor food and non-food use sites, residential settings, and commercial/industrial facilities. Approximately 47 million total pounds were applied annually during the years 1990 through 1999. Pre-plant field uses in agriculture accounted for about 41 million pounds per year while post-harvest commodity treatments accounted for another 4 million pounds and structural fumigations accounted for 2.3 million pounds per year. Strawberries (54 percent), eggplant (43 percent), peppers (17 percent), and tomatoes (13 percent) are the crops with the highest percentage of their overall acreage treated.

Regarding risks to humans from methyl bromide, there are no aggregate dietary risks of concern resulting from acute and chronic exposures (food and water only). However, residential risks exceed the Agency's level of concern for several scenarios. Worker risks also exceed Agency's level of concern for the majority of scenarios considered, even when appropriate mitigation measures were taken (e.g., respirators and emission reduction technology such as tarps). Acute risks to birds and mammals do not exceed the Agency's level of concern. However, there is a potential for exposure over a prolonged period. For aquatic organisms, the only aquatic LOC exceeded (based on estimated environmental concentrations) is the acute endangered species LOC for aquatic invertebrates.

EPA is providing an opportunity, through this notice, for interested parties to provide comments and input on the Agency's risk assessments for methyl bromide. Such comments and input could address, for example, the availability of additional data to further refine the risk assessments, or information about specific use practices for crops that are produced using methyl bromide. For example, the following information would be helpful to EPA in characterizing regional and crop differences in use practices and possible effects on potential risk. When providing this information to the Agency, consider providing pictures or video footage to help clarify your comments.

1. Crop.
2. Fumigant use.
3. Average acres grown per enterprise.
4. Maximum acres fumigated per day.
5. Percent of the acres grown that are fumigated.
6. Typical application rate (lb a.i./acre).
7. Minimum application rate used (lb a.i./acre)(for high pest pressure situations).
8. Time of year that soil is fumigated.
9. Fumigation cycle (every crop cycle, 1 time/year, 1 time/2 years).
10. Target pests (by category or specific pests).
11. Method of application (e.g., chemigation, soil injection, specific equipment used, etc.).
12. Methods or actions taken to reduce emissions (polyethylene tarps or soil cap).
13. Could high-density polyethylene (HDPE) or high barrier tarps be used on this crop?
14. Time between treatment and next production activity (e.g., time until planting).
15. Typical crops following the fumigated crop (only if they benefit from the fumigation).
16. Regulatory restrictions in your area on this fumigant or an alternative fumigant (such as weather restrictions).
17. Soil restrictions on this fumigant or an alternative fumigant.
18. Any restrictions or concerns about minimum soil temperature, hilly terrain, etc.
19. Best available alternative (another fumigant or strategy such as leaving land fallow, etc.).
20. Could the use of different soil fumigants be alternated (e.g., metam sodium followed by 1,3-D)? Specify how.
21. Yield or quality impacts that are likely to result from moving to the best available alternative (i.e., change in commodity price or grade).
22. Would moving to the next best alternative impact key market windows? How?
23. Cost per acre of active ingredient.
24. Cost per acre of other fumigation inputs (e.g., tarps and equipment).
25. Is there a crop budget available for your area and crop?
26. Do you know of any other contacts or other sources of information for this crop that could provide information on acreage, prices, pests, etc.?
27. Are there non-chemical alternatives that can be used in place of fumigants? Describe use.

EPA seeks to achieve environmental justice, the fair treatment and meaningful involvement of all people, regardless of race, color, national origin, or income, in the development, implementation, and enforcement of environmental laws, regulations, and policies. To help address potential environmental justice issues, the Agency seeks information on any groups or segments of the population who, as a result of their location, cultural practices, or other factors, may have atypical, unusually high exposure to methyl bromide, compared to the general population.

EPA is applying the principles of public participation to all pesticides undergoing reregistration and tolerance reassessment. The Agency's Pesticide Tolerance Reassessment and Reregistration; Public Participation Process, published in the **Federal Register** on May 14, 2004, (69 FR 26819)(FRL–7357–9) explains that in conducting these programs, EPA is tailoring its public participation process to be commensurate with the level of risk, extent of use, complexity of issues, and degree of public concern associated with each pesticide. EPA plans to review methyl bromide through the full, 6–Phase public participation process.

Comments should be limited to issues raised within the risk assessments and associated documents. Failure to comment on any such issues as part of this opportunity will not limit a commenter's opportunity to participate in any later notice and comment processes on this matter. All comments should be submitted using the methods in Unit I. of the **SUPPLEMENTARY INFORMATION**, and must be received by EPA on or before the closing date. Comments will become part of the Agency Docket for methyl bromide. Comments received after the close of the comment period will be marked ''late.'' EPA is not required to consider these late comments.

B. What is the Agency's Authority for Taking this Action?

Section 4(g)(2) of FIFRA as amended directs that, after submission of all data concerning a pesticide active ingredient, ''the Administrator shall determine whether pesticides containing such active ingredient are eligible for

reregistration,'' before calling in product specific data on individual end-use products and either reregistering products or taking other ''appropriate regulatory action.''

Section 408(q) of the FFDCA, 21 U.S.C. 346a(q), requires EPA to review tolerances and exemptions for pesticide residues in effect as of August 2, 1996, to determine whether the tolerance or exemption meets the requirements of section 408(b)(2) or (c)(2) of FFDCA. This review is to be completed by August 3, 2006.

List of Subjects

Environmental protection, Pesticides and pests.

Dated: June 29,2005.

Debra Edwards,

Director, Special Review and Reregistration Division, Office of Pesticide Programs.

[FR Doc. 05–13372 Filed 7–12–05; 8:45 am]

BILLING CODE 6560–50–S

ENVIRONMENTAL PROTECTION AGENCY

[OPP–2005–0128; FRL–7721–8]

Dazomet Risk Assessment; Notice of Availability

AGENCY: Environmental Protection Agency (EPA).

ACTION: Notice.

SUMMARY: This notice announces the availability of EPA's human health risk assessment and related documents for the pesticide dazomet, and opens a public comment period on these documents. EPA is developing a Reregistration Eligibility Decision (RED) for dazomet through the full, 6-Phase public participation process that the Agency uses to involve the public in developing pesticide reregistration and tolerance reassessment decisions. EPA also is concurrently assessing the risks of five other soil fumigant pesticides to ensure that its assessment approaches are consistent and to ensure that risk trade offs and economic outcomes can be adequately predicted in reaching risk management decisions. Through these programs, EPA is ensuring that all pesticides meet current health and safety standards.

DATES: Comments, identified by docket identification (ID) number OPP–2005–0128, must be received on or before September 12, 2005.

ADDRESSES: Comments may be submitted electronically, by mail, or through hand delivery/courier. Follow the detailed instructions as provided in Unit I. of the **SUPPLEMENTARY INFORMATION**.

FOR FURTHER INFORMATION CONTACT: Mark Seaton, Special Review and Reregistration Division (7508C), Office of Pesticide Programs, Environmental Protection Agency, 1200 Pennsylvania Ave., NW., Washington, DC 20460–0001; telephone number: (703) 306–0469; fax number: (703) 308–8041; e-mail address: *seaton.mark@epa.gov*.

SUPPLEMENTARY INFORMATION:

I. General Information

A. Does this Action Apply to Me?

This action is directed to the public in general, and may be of interest to a wide range of stakeholders including environmental, human health, and agricultural advocates; the chemical industry; pesticide users; and members of the public interested in the sale, distribution, or use of pesticides. Since others also may be interested, the Agency has not attempted to describe all the specific entities that may be affected by this action. If you have any questions regarding the applicability of this action to a particular entity, consult the person listed under **FOR FURTHER INFORMATION CONTACT**.

B. How Can I Get Copies of this Document and Other Related Information?

1. *Docket*. EPA has established an official public docket for this action under docket ID number OPP–2005–0128. The official public docket consists of the documents specifically referenced in this action, any public comments received, and other information related to this action. Although a part of the official docket, the public docket does not include Confidential Business Information (CBI) or other information whose disclosure is restricted by statute. The official public docket is the collection of materials that is available for public viewing at the Public Information and Records Integrity Branch (PIRIB), Rm. 119, Crystal Mall#2, 1801 S. Bell St., Arlington, VA. This docket facility is open from 8:30 a.m. to 4 p.m., Monday through Friday, excluding legal holidays. The docket telephone number is (703) 305–5805.

2. *Electronic access*. You may access this**Federal Register** document electronically through the EPA Internet under the ''**Federal Register**'' listings at *http://www.epa.gov/fedrgstr/*.

An electronic version of the public docket is available through EPA's electronic public docket and comment system, EPA Dockets. You may use EPA Dockets at *http://www.epa.gov/edocket/* to submit or view public comments, access the index listing of the contents of the official public docket, and to access those documents in the public docket that are available electronically. Once in the system, select ''search,'' then key in the appropriate docket ID number.

Certain types of information will not be placed in the EPA Dockets. Information claimed as CBI and other information whose disclosure is restricted by statute, which is not included in the official public docket, will not be available for public viewing in EPA's electronic public docket. EPA's policy is that copyrighted material will not be placed in EPA's electronic public docket but will be available only in printed, paper form in the official public docket. To the extent feasible, publicly available docket materials will be made available in EPA's electronic public docket. When a document is selected from the index list in EPA Dockets, the system will identify whether the document is available for viewing in EPA's electronic public docket. Although not all docket materials may be available electronically, you may still access any of the publicly available docket materials through the docket facility identified in Unit I.B.1. EPA intends to work towards providing electronic access to all of the publicly available docket materials through EPA's electronic public docket.

For public commenters, it is important to note that EPA's policy is that public comments, whether submitted electronically or in paper, will be made available for public viewing in EPA's electronic public docket as EPA receives them and without change, unless the comment contains copyrighted material, CBI, or other information whose disclosure is restricted by statute. When EPA identifies a comment containing copyrighted material, EPA will provide a reference to that material in the version of the comment that is placed in EPA's electronic public docket. The entire printed comment, including the copyrighted material, will be available in the public docket.

Public comments submitted on computer disks that are mailed or delivered to the docket will be transferred to EPA's electronic public docket. Public comments that are mailed or delivered to the docket will be scanned and placed in EPA's electronic public docket. Where practical, physical objects will be photographed, and the photograph will be placed in EPA's electronic public docket along with a brief description written by the docket staff.

C. How and to Whom Do I Submit Comments?

You may submit comments electronically, by mail, or through hand delivery/courier. To ensure proper receipt by EPA, identify the appropriate docket ID number in the subject line on the first page of your comment. Please ensure that your comments are submitted within the specified comment period. Comments received after the close of the comment period will be marked ''late.'' EPA is not required to consider these late comments. If you wish to submit CBI or information that is otherwise protected by statute, please follow the instructions in Unit I.D. Do not use EPA Dockets or e-mail to submit CBI or information protected by statute.

1. *Electronically*. If you submit an electronic comment as prescribed in this unit, EPA recommends that you include your name, mailing address, and an e-mail address or other contact information in the body of your comment. Also include this contact information on the outside of any disk or CD ROM you submit, and in any cover letter accompanying the disk or CD ROM. This ensures that you can be identified as the submitter of the comment and allows EPA to contact you in case EPA cannot read your comment due to technical difficulties or needs further information on the substance of your comment. EPA's policy is that EPA will not edit your comment, and any identifying or contact information provided in the body of a comment will be included as part of the comment that is placed in the official public docket, and made available in EPA's electronic public docket. If EPA cannot read your comment due to technical difficulties and cannot contact you for clarification, EPA may not be able to consider your comment.

i. *EPA Dockets*. Your use of EPA's electronic public docket to submit comments to EPA electronically is EPA's preferred method for receiving comments. Go directly to EPA Dockets at *http://www.epa.gov/edocket/*, and follow the online instructions for submitting comments. Once in the system, select ''search,'' and then key in docket ID number OPP–2005–0128. The system is an ''anonymous access'' system, which means EPA will not know your identity, e-mail address, or other contact information unless you provide it in the body of your comment.

ii. *E-mail*. Comments may be sent by e-mail to *opp-docket@epa.gov*, Attention: Docket ID Number OPP–2005–0128. In contrast to EPA's electronic public docket, EPA's e-mail system is not an ''anonymous access'' system. If you send an e-mail comment directly to the docket without going through EPA's electronic public docket, EPA's e-mail system automatically captures your e-mail address. E-mail addresses that are automatically captured by EPA's e-mail system are included as part of the comment that is placed in the official public docket, and made available in EPA's electronic public docket.

iii. *Disk or CD ROM*. You may submit comments on a disk or CD ROM that you mail to the mailing address identified in Unit I.C.2. These electronic submissions will be accepted in WordPerfect or ASCII file format. Avoid the use of special characters and any form of encryption.

2. *By mail*. Send your comments to: Public Information and Records Integrity Branch (PIRIB) (7502C), Office of Pesticide Programs (OPP), Environmental Protection Agency, 1200 Pennsylvania Ave., NW., Washington, DC 20460–0001, Attention: Docket ID Number OPP–2005–0128 (dazomet).

3. *By hand delivery or courier*. Deliver your comments to: Public Information and Records Integrity Branch (PIRIB), Office of Pesticide Programs (OPP), Environmental Protection Agency, Rm. 119, Crystal Mall #2, 1801 S. Bell St., Arlington, VA, Attention: Docket ID Number OPP–2005–0128. Such deliveries are only accepted during the docket's normal hours of operation as identified in Unit I.B.1.

D. How Should I Submit CBI to the Agency?

Do not submit information that you consider to be CBI electronically through EPA's electronic public docket or by e-mail. You may claim information that you submit to EPA as CBI by marking any part or all of that information as CBI (if you submit CBI on disk or CD ROM, mark the outside of the disk or CD ROM as CBI and then identify electronically within the disk or CD ROM the specific information that is CBI). Information so marked will not be disclosed except in accordance with procedures set forth in 40 CFR part 2.

In addition to one complete version of the comment that includes any information claimed as CBI, a copy of the comment that does not contain the information claimed as CBI must be submitted for inclusion in the public docket and EPA's electronic public docket. If you submit the copy that does not contain CBI on disk or CD ROM, mark the outside of the disk or CD ROM clearly that it does not contain CBI. Information not marked as CBI will be included in the public docket and EPA's electronic public docket without prior notice. If you have any questions about CBI or the procedures for claiming CBI, please consult the person listed under **FOR FURTHER INFORMATION CONTACT**.

E. What Should I Consider as I Prepare My Comments for EPA?

You may find the following suggestions helpful for preparing your comments:

1. Explain your views as clearly as possible.
2. Describe any assumptions that you used.
3. Provide any technical information and/or data you used that support your views.
4. If you estimate potential burden or costs, explain how you arrived at your estimate.
5. Provide specific examples to illustrate your concerns.
6. Offer alternatives.
7. Make sure to submit your comments by the comment period deadline identified.
8. To ensure proper receipt by EPA, identify the appropriate docket ID number in the subject line on the first page of your response. It would also be helpful if you provided the name, date, and **Federal Register** citation related to your comments.

II. Background

A. What Action is the Agency Taking?

EPA is making available the human health risk assessment for dazomet. It is used as non-selective pre-plant soil fumigant with fungicidal, herbicidal, insecticidal, and nematicidal properties. Dazomet is converted to methyl isothiocyanate (MITC) in the environment, particularly in the presence of moisture (such as in soil after application). It is MITC that performs the fumigating activity.

The volatility of dazomet in the environment and results of metabolism studies in plants assure that there is no reasonable expectation of finite residues to be incurred in/on any raw agricultural commodity when the products are applied according to label directions. Therefore, this fumigant does not require food tolerances.

EPA is providing an opportunity, through this notice, for interested parties to provide comments and input on the Agency's risk assessment for dazomet. Such comments and input could address, for example, the availability of additional data to further refine the risk assessments, or information about specific use practices for crops that are produced using dazomet. When providing information to the Agency, consider providing

pictures or video footage to help clarify your comment. The following information would be helpful to EPA in characterizing regional and crop differences in use practices and possible effects on potential risk:

- Crop.
- Fumigant use.
- Average acres grown per enterprise.
- Maximum acres fumigated per day.
- Percent of the acres grown that are fumigated.
- Typical application rate (lb a.i./acre).
- Minimum application rate used (lb a.i./acre)(for high pest pressure situations).
- Time of year that soil is fumigated.
- Fumigation cycle (every crop cycle, 1 time/year, 1 time/2 years).
- Target pests (by category or specific pests).
- Method of application (e.g., chemigation, soil injection, specific equipment used, etc).
- Methods or actions taken to reduce emissions (e.g., polyethylene tarps, water seal, or soil cap).
- Could high-density polyethylene (HDPE) or high barrier tarps be used on this crop?
- Time between treatment and next production activity (e.g., time until planting).
- Typical crops following the fumigated crop (only if they benefit from the fumigation).
- Regulatory restrictions in your area on this fumigant or an alternative fumigant (such as weather restrictions).
- Soil restrictions on this fumigant or an alternative fumigant.
- Any restrictions or concerns about minimum soil temperature, hilly terrain, etc.
- Best available alternative (another fumigant or strategy such as leaving land fallow, etc).
- Could the use of different fumigants be alternated to achieve similar efficacy (e.g., metam sodium followed by 1,3-D)? Specify how.
- Yield or quality impacts that are likely to result from moving to the next best available alternative (i.e., change in commodity price or grade).
- Would moving to the next best alternative impact key market windows? How?
- Cost per acre of active ingredient.
- Cost per acre of other fumigation inputs (e.g., irrigation and equipment).
- Is there a crop budget available for your area and crop?
- Do you know of any other contacts or other sources of information for this crop that could provide information on acreage, prices, pests, etc?
- Are there non-chemical alternatives that can be used in place of fumigants? Describe use.

EPA seeks to achieve environmental justice, the fair treatment and meaningful involvement of all people, regardless of race, color, national origin, or income, in the development, implementation, and enforcement of environmental laws, regulations, and policies. To help address potential environmental justice issues, the Agency seeks information on any groups or segments of the population who, as a result of their location, cultural practices, or other factors, may have atypical, unusually high exposure to dazomet, compared to the general population.

EPA is applying the principles of public participation to all pesticides undergoing reregistration and tolerance reassessment. The Agency's Pesticide Tolerance Reassessment and Reregistration; Public Participation Process, published in the **Federal Register** on May 14, 2004, (69 FR 26819) (FRL–7357–9) explains that in conducting these programs, EPA is tailoring its public participation process to be commensurate with the level of risk, extent of use, complexity of issues, and degree of public concern associated with each pesticide. EPA plans to review dazomet through the full, 6-Phase public participation process.

Comments should be limited to issues raised within the risk assessment and associated documents. Failure to comment on any such issues as part of this opportunity will not limit a commenter's opportunity to participate in any later notice and comment processes on this matter. All comments should be submitted using the methods in Unit I. of the **SUPPLEMENTARY INFORMATION**, and must be received by EPA on or before the closing date. Comments will become part of the Agency Docket for dazomet. Comments received after the close of the comment period will be marked ''late.'' EPA is not required to consider these late comments.

B. What is the Agency's Authority for Taking this Action?

Section 4(g)(2) of FIFRA as amended directs that, after submission of all data concerning a pesticide active ingredient, ''the Administrator shall determine whether pesticides containing such active ingredient are eligible for reregistration,'' before calling in product specific data on individual end-use products and either reregistering products or taking other ''appropriate regulatory action.''

Section 408(q) of the FFDCA, 21 U.S.C. 346a(q), requires EPA to review tolerances and exemptions for pesticide residues in effect as of August 2, 1996, to determine whether the tolerance or exemption meets the requirements of section 408(b)(2) or (c)(2) of FFDCA. This review is to be completed by August 3, 2006.

List of Subjects

Environmental protection, Pesticides and pests.

Dated: June 29, 2005.

Debra Edwards,

Director, Special Review and Reregistration Division, Office of Pesticide Programs.

[FR Doc. 05–13373 Filed 7–13–05; 8:45 am]

BILLING CODE 6560–50–S

ENVIRONMENTAL PROTECTION AGENCY

[OPP–2004–0295; FRL–7720–4]

Cyhexatin; Tolerance Reassessment Decision

AGENCY: Environmental Protection Agency (EPA).

ACTION: Notice.

SUMMARY: This notice announces the availability of EPA's Tolerance Reassessment Decision (TRED) for the pesticide cyhexatin. The Agency's risk assessments and other related documents also are available in the Cyhexatin Docket. Through the tolerance reassessment program, EPA is ensuring that all pesticides meet current health and food safety standards.

FOR FURTHER INFORMATION CONTACT: Tom Myers, Special Review and Reregistration Division (7508C), Office of Pesticide Programs, Environmental Protection Agency, 1200 Pennsylvania Ave., NW., Washington, DC 20460–0001; telephone number: (703) 308–8589, fax number: (703) 308–8041; e-mail address: *myers.tom@epa.gov.*

SUPPLEMENTARY INFORMATION:

I. General Information

A. Does this Action Apply to Me?

This action is directed to the public in general, and may be of interest to a wide range of stakeholders including environmental, human health, and agricultural advocates; the chemical industry; pesticide users; and members of the public interested in the sale, distribution, or use of pesticides. Since others also may be interested, the Agency has not attempted to describe all the specific entities that may be affected by this action. If you have any questions

regarding the applicability of this action to a particular entity, consult the person listed under **FOR FURTHER INFORMATION CONTACT**.

B. How Can I Get Copies of this Document and Other Related Information?

1. *Docket*. EPA has established an official public docket for this action under docket identification (ID) number OPP–2004–0295. The official public docket consists of the documents specifically referenced in this action, any public comments received, and other information related to this action. Although a part of the official docket, the public docket does not include Confidential Business Information (CBI) or other information whose disclosure is restricted by statute. The official public docket is the collection of materials that is available for public viewing at the Public Information and Records Integrity Branch (PIRIB), Rm. 119, Crystal Mall #2, 1801 S. Bell St., Arlington, VA. This docket facility is open from 8:30 a.m. to 4 p.m., Monday through Friday, excluding legal holidays. The docket telephone number is (703) 305–5805.

2. *Electronic access*. You may access this **Federal Register** document electronically through the EPA Internet under the ''**Federal Register**'' listings at *http://www.epa.gov/fedrgstr/*.

An electronic version of the public docket is available through EPA's electronic public docket and comment system, EPA Dockets. You may use EPA Dockets at *http://www.epa.gov/edocket/* to view public comments, access the index listing of the contents of the official public docket, and to access those documents in the public docket that are available electronically. Although not all docket materials may be available electronically, you may still access any of the publicly available docket materials through the docket facility identified in Unit I.B.1. Once in the system, select ''search,'' then key in the appropriate docket ID number.

II. Background

A. What Action is the Agency Taking?

EPA has reassessed risks associated with use of the pesticide cyhexatin, and on June 13, 2005, reached a tolerance reassessment and risk management decision. Cyhexatin is used as an insecticide/acaricide to control mites on a variety of crops. The last U.S. product registration was canceled in 1989. There are currently 41 tolerances for cyhexatin. However, the manufacturers have indicated that they are only supporting the tolerance for orange juice for import purposes. Therefore, EPA will revoke all existing cyhexatin tolerances and a tolerance with no U.S. registrations will be established for orange, juice. The orange juice tolerance, in effect, replaces the existing citrus tolerance. This tolerance will be time-limited pending submission and review of confirmatory generic data. The Agency is now issuing a Report on Food Quality Protection Act (FQPA) Tolerance Reassessment Progress and Risk Management Decision for Cyhexatin, known as a TRED, as well as all related technical support documents.

EPA must review tolerances and tolerance exemptions that were in effect when FQPA was enacted in August 1996, to ensure that these existing pesticide residue limits for food and feed commodities meet the safety standard established by the new law. Tolerances are considered reassessed once the safety finding has been made or a revocation occurs. EPA has reviewed and made the requisite safety finding for the orange juice tolerance only. The 41 existing cyhexatin tolerances will be proposed for revocation.

EPA is applying the principles of public participation to all pesticides undergoing reregistration and tolerance reassessment. The Agency's Pesticide Tolerance Reassessment and Reregistration; Public Participation Process, published in the **Federal Register** on May 14, 2004, (69 FR 26819)(FRL-7357-9) explains that in conducting these programs, EPA is tailoring its public participation process to be commensurate with the level of risk, extent of use, complexity of issues, and degree of public concern associated with each pesticide. Due to its uses, risks, and other factors, cyhexatin was reviewed through the modified 4-Phase public participation process. Through this process, EPA worked extensively with stakeholders and the public to reach the regulatory decisions for cyhexatin.

The tolerance reassessment program is being conducted under Congressionally mandated time frames, and EPA recognizes the need both to make timely decisions and to involve the public. A comment period is not needed for the cyhexatin TRED because all issues related to this pesticide were resolved through consultations with stakeholders. The Agency therefore is issuing the cyhexatin TRED without a comment period. However, the proposed tolerance revocation for cyhexatin will include a 30–day public comment period.

B. What is the Agency's Authority for Taking this Action?

Section 408(q) of the FFDCA, 21 U.S.C. 346a(q), requires EPA to review tolerances and exemptions for pesticide residues in effect as of August 2, 1996, to determine whether the tolerance or exemption meets the requirements of section 408(b)(2) or (c)(2) of FFDCA. This review is to be completed by August 3, 2006.

List of Subjects

Environmental protection, Pesticides and pests.

Dated: June 29, 2005.

Debra Edwards,

Director, Special Review and Reregistration Division, Office of Pesticide Programs.

[FR Doc. 05–13374 Filed 7–12–05; 8:45 am]

BILLING CODE 6560–50–S

ENVIRONMENTAL PROTECTION AGENCY

[OPP–2005–0124; FRL–7721–9]

1,3-Dichloropropene Risk Assessment; Notice of Availability

AGENCY: Environmental Protection Agency (EPA).

ACTION: Notice.

SUMMARY: This notice announces the availability of EPA's human health risk assessment for the soil fumigant 1,3-Dichloropropene (1,3-D), which is commonly referred to as telone, and opens a public comment period on this document. Although 1,3-D has undergone reregistration and a Reregistration Eligibility Decision was published for 1,3-D in December 1998, EPA is concurrently assessing six soil fumigants to ensure that its risk assessment approaches are consistent, and to ensure that risk tradeoffs and economic outcomes can be adequately predicted in reaching risk management decisions for the five other soil fumigants. EPA has developed a human health risk assessment for 1,3-D and is seeking comment through a public participation process in order to make available current and accurate information on this pesticide. Using this approach, EPA expects to address risks of concern for the five other soil fumigants while maintaining key use benefits.

DATES: Comments, identified by docket identification (ID) number OPP–2005–0124, must be received on or before September 12, 2005.

ADDRESSES: Comments may be submitted electronically, by mail, or

through hand delivery/courier. Follow the detailed instructions as provided in Unit I. of the **SUPPLEMENTARY INFORMATION**.

FOR FURTHER INFORMATION CONTACT: Diane Sherman, Special Review and Reregistration Division (7508C), Office of Pesticide Programs, Environmental Protection Agency, 1200 Pennsylvania Ave., NW., Washington, DC 20460–0001; telephone number: (703) 308–0128; fax number: (703) 305–8041; e-mail address: *sherman.diane@epa.gov*.

SUPPLEMENTARY INFORMATION:

I. General Information

A. Does this Action Apply to Me?

This action is directed to the public in general, and may be of interest to a wide range of stakeholders including environmental, human health, and agricultural advocates; the chemical industry; pesticide users; and members of the public interested in the sale, distribution, or use of pesticides. Since others also may be interested, the Agency has not attempted to describe all the specific entities that may be affected by this action. If you have any questions regarding the applicability of this action to a particular entity, consult the person listed under **FOR FURTHER INFORMATION CONTACT**.

B. How Can I Get Copies of this Document and Other Related Information?

1. *Docket*. EPA has established an official public docket for this action under docket ID number OPP–2005–0124. The official public docket consists of the documents specifically referenced in this action, any public comments received, and other information related to this action. Although a part of the official docket, the public docket does not include Confidential Business Information (CBI) or other information whose disclosure is restricted by statute. The official public docket is the collection of materials that is available for public viewing at the Public Information and Records Integrity Branch (PIRIB), Rm. 119, Crystal Mall #2, 1801 S. Bell St., Arlington, VA. This docket facility is open from 8:30 a.m. to 4 p.m., Monday through Friday, excluding legal holidays. The docket telephone number is (703) 305–5805.

2.*Electronic access*. You may access this **Federal Register** document electronically through the EPA Internet under the ''**Federal Register**'' listings at *http://www.epa.gov/fedrgstr/*.

An electronic version of the public docket is available through EPA's electronic public docket and comment system, EPA Dockets. You may use EPA Dockets at *http://www.epa.gov/edocket/* to submit or view public comments, access the index listing of the contents of the official public docket, and to access those documents in the public docket that are available electronically. Once in the system, select ''search,'' then key in the appropriate docket ID number.

Certain types of information will not be placed in the EPA Dockets. Information claimed as CBI and other information whose disclosure is restricted by statute, which is not included in the official public docket, will not be available for public viewing in EPA's electronic public docket. EPA's policy is that copyrighted material will not be placed in EPA's electronic public docket but will be available only in printed, paper form in the official public docket. To the extent feasible, publicly available docket materials will be made available in EPA's electronic public docket. When a document is selected from the index list in EPA Dockets, the system will identify whether the document is available for viewing in EPA's electronic public docket. Although not all docket materials may be available electronically, you may still access any of the publicly available docket materials through the docket facility identified in Unit I.B.1. EPA intends to work towards providing electronic access to all of the publicly available docket materials through EPA's electronic public docket.

For public commenters, it is important to note that EPA's policy is that public comments, whether submitted electronically or in paper, will be made available for public viewing in EPA's electronic public docket as EPA receives them and without change, unless the comment contains copyrighted material, CBI, or other information whose disclosure is restricted by statute. When EPA identifies a comment containing copyrighted material, EPA will provide a reference to that material in the version of the comment that is placed in EPA's electronic public docket. The entire printed comment, including the copyrighted material, will be available in the public docket.

Public comments submitted on computer disks that are mailed or delivered to the docket will be transferred to EPA's electronic public docket. Public comments that are mailed or delivered to the docket will be scanned and placed in EPA's electronic public docket. Where practical, physical objects will be photographed, and the photograph will be placed in EPA's electronic public docket along with a brief description written by the docket staff.

C. How and to Whom Do I Submit Comments?

You may submit comments electronically, by mail, or through hand delivery/courier. To ensure proper receipt by EPA, identify the appropriate docket ID number in the subject line on the first page of your comment. Please ensure that your comments are submitted within the specified comment period. Comments received after the close of the comment period will be marked ''late.'' EPA is not required to consider these late comments. If you wish to submit CBI or information that is otherwise protected by statute, please follow the instructions in Unit I.D. Do not use EPA Dockets or e-mail to submit CBI or information protected by statute.

1. *Electronically*. If you submit an electronic comment as prescribed in this unit, EPA recommends that you include your name, mailing address, and an e-mail address or other contact information in the body of your comment. Also include this contact information on the outside of any disk or CD ROM you submit, and in any cover letter accompanying the disk or CD ROM. This ensures that you can be identified as the submitter of the comment and allows EPA to contact you in case EPA cannot read your comment due to technical difficulties or needs further information on the substance of your comment. EPA's policy is that EPA will not edit your comment, and any identifying or contact information provided in the body of a comment will be included as part of the comment that is placed in the official public docket, and made available in EPA's electronic public docket. If EPA cannot read your comment due to technical difficulties and cannot contact you for clarification, EPA may not be able to consider your comment.

i. *EPA Dockets*. Your use of EPA's electronic public docket to submit comments to EPA electronically is EPA's preferred method for receiving comments. Go directly to EPA Dockets at *http://www.epa.gov/edocket/*, and follow the online instructions for submitting comments. Once in the system, select ''search,'' and then key in docket ID number OPP–2005–0124. The system is an ''anonymous access'' system, which means EPA will not know your identity, e-mail address, or other contact information unless you provide it in the body of your comment.

ii. *E-mail*. Comments may be sent by e-mail to *opp-docket@epa.gov*, Attention: Docket ID Number OPP–2005–0124. In contrast to EPA's

electronic public docket, EPA's e-mail system is not an ''anonymous access'' system. If you send an e-mail comment directly to the docket without going through EPA's electronic public docket, EPA's e-mail system automatically captures your e-mail address. E-mail addresses that are automatically captured by EPA's e-mail system are included as part of the comment that is placed in the official public docket, and made available in EPA's electronic public docket.

iii. *Disk or CD ROM.* You may submit comments on a disk or CD ROM that you mail to the mailing address identified in Unit I.C.2. These electronic submissions will be accepted in WordPerfect or ASCII file format. Avoid the use of special characters and any form of encryption.

2. *By mail.* Send your comments to: Public Information and Records Integrity Branch (PIRIB) (7502C), Office of Pesticide Programs (OPP), Environmental Protection Agency, 1200 Pennsylvania Ave., NW., Washington, DC 20460–0001, Attention: Docket ID Number OPP–2005–0124.

3. *By hand delivery or courier.* Deliver your comments to: Public Information and Records Integrity Branch (PIRIB), Office of Pesticide Programs (OPP), Environmental Protection Agency, Rm. 119, Crystal Mall #2, 1801 S. Bell St., Arlington, VA, Attention: Docket ID Number OPP–20005–0124. Such deliveries are only accepted during the docket's normal hours of operation as identified in Unit I.B.1.

D. How Should I Submit CBI to the Agency?

Do not submit information that you consider to be CBI electronically through EPA's electronic public docket or by e-mail. You may claim information that you submit to EPA as CBI by marking any part or all of that information as CBI (if you submit CBI on disk or CD ROM, mark the outside of the disk or CD ROM as CBI and then identify electronically within the disk or CD ROM the specific information that is CBI). Information so marked will not be disclosed except in accordance with procedures set forth in 40 CFR part 2.

In addition to one complete version of the comment that includes any information claimed as CBI, a copy of the comment that does not contain the information claimed as CBI must be submitted for inclusion in the public docket and EPA's electronic public docket. If you submit the copy that does not contain CBI on disk or CD ROM, mark the outside of the disk or CD ROM clearly that it does not contain CBI. Information not marked as CBI will be included in the public docket and EPA's electronic public docket without prior notice. If you have any questions about CBI or the procedures for claiming CBI, please consult the person listed under **FOR FURTHER INFORMATION CONTACT**.

E. What Should I Consider as I Prepare My Comments for EPA?

You may find the following suggestions helpful for preparing your comments:

1. Explain your views as clearly as possible.
2. Describe any assumptions that you used.
3. Provide any technical information and/or data you used that support your views.
4. If you estimate potential burden or costs, explain how you arrived at your estimate.
5. Provide specific examples to illustrate your concerns.
6. Offer alternatives.
7. Make sure to submit your comments by the comment period deadline identified.
8. To ensure proper receipt by EPA, identify the appropriate docket ID number in the subject line on the first page of your response. It would also be helpful if you provided the name, date, and **Federal Register** citation related to your comments.

II. Background

A. What Action is the Agency Taking?

EPA is making available the human health risk assessment for the soil fumigant 1,3-D, which is commonly known as telone. The Agency developed this risk assessment and is seeking comment through a public participation process in order to make available current and accurate information on 1,3-D for the soil fumigant assessments. Other soil fumigants are currently undergoing the full, six-phase public participation process that the Agency uses to involve the public in developing pesticide reregistration and tolerance reassessment decisions. Through these programs, EPA is ensuring that pesticides meet current standards under the Federal Insecticide, Fungicide, and Rodenticide Act (FIFRA) and the Federal Food, Drug, and Cosmetic Act (FFDCA), as amended by the Food Quality Protection Act of 1996 (FQPA).

A soil fumigant, 1,3-D is applied to control parasitic root-knot nematodes and certain pests and diseases in soil prior to the planting of a variety of food and feed crops including vegetable crops, field crops, fruit and nut crops, and nursery crops. 1,3-D is also registered for use on golf courses and there are proposed uses for turf farms and post-plant in established vineyards. 1,3-D is also a restricted use pesticide and as such can only be applied by certified applicators or those under the supervision of a certified applicator. End-use product formulations containing 1,3-D may be applied through drip irrigation or by injection below the soil surface either in rows or broadcast across an area.

1,3-D was deemed eligible for reregistration in December 1998. The volatility of 1,3-D in the environment and results of metabolism studies in plants assure that there is no reasonable expectation of finite residues to be incurred in/on any raw agricultural commodities when end-use product formulations containing 1,3-D are applied according to label directions. Therefore, this fumigant does not require food tolerances. EPA does not expect any need for additional risk mitigation for 1,3-D but has developed this risk assessment to ensure that risk tradeoffs and economic outcomes can be adequately predicted in reaching risk management decisions for the five othersoil fumigants.

EPA is providing an opportunity, through this notice, for interested parties to provide comments and input on the Agency's human health risk assessment for 1,3-D. Such comments and input could address, for example, the availability of additional data to further refine the risk assessment or information about specific use practices for crops that are produced using 1,3-D. When providing information to the Agency you might consider providing pictures or video footage to help clarify your comment. The following information would be helpful to EPA in characterizing regional and crop differences in use practices and possible effects on potential:

- Crop.
- Fumigant use.
- Average acres grown per enterprise.
- Maximum acres fumigated per day.
- Percent of the acres grown that are fumigated.
- Typical application rate (pound active ingredient/acre (lb a.i./acre)).
- Minimum application rate used (lb a.i./acre) (for high pest pressure situations).
- Time of year that soil is fumigated.
- Fumigation cycle (every crop cycle, 1 time/year, 1 time/2 years).
- Target pests (by category or specific pests).
- Method of application (e.g., chemigation, soil injection, specific equipment used).

• Methods or actions taken to reduce emissions (polyethylene tarps or soil cap).
• Could high-density polyethylene (HDPE) or high barrier tarps be used on this crop?
• Time between treatment and next production activity (e.g., time until planting).
• Typical crops following the fumigated crop (only if they benefit from the fumigation).
• Regulatory restrictions in your area on this fumigant or an alternative fumigant (such as weather restrictions).
• Soil restrictions on this fumigant or an alternative fumigant.
• Any restrictions or concerns about minimum soil temperature, hilly terrain, etc.
• Best available alternative (another fumigant or strategy such as leaving land fallow, etc.).
• Could the use of different fumigants be alternated (e.g., metam sodium followed by 1,3-D)? Specify how.
• Yield or quality impacts that are likely to result from moving to best available alternative (i.e., change in commodity price or grade).
• Would moving to the next best alternative impact key market windows? How?
• Cost per acre of active ingredient.
• Cost per acre of other fumigation inputs (e.g., tarps and equipment).
• Is there a crop budget available for your area and crop?
• Do you know of any other contacts or other sources of information for this crop that could provide information on acreage, prices, pests, etc.?
• Are there non-chemical alternatives that can be used in place of fumigants? Describe use.

EPA seeks to achieve environmental justice, the fair treatment and meaningful involvement of all people, regardless of race, color, national origin, or income, in the development, implementation, and enforcement of environmental laws, regulations, and policies. To help address potential environmental justice issues, the Agency seeks information on any groups or segments of the population who, as a result of their location, cultural practices, or other factors, may have atypical, unusually high exposure to 1,3-D, compared to the general population.

EPA is applying the principles of public participation to all pesticides undergoing reregistration and tolerance reassessment. The Agency's Pesticide Tolerance Reassessment and Reregistration; Public Participation Process, published in the **Federal Register** of May 14, 2004 (69 FR 26819) (FRL–7357–9), explains that in conducting these programs, EPA is tailoring its public participation process to be commensurate with the level of risk, extent of use, complexity of issues, and degree of public concern associated with each pesticide. Although 1,3-D has undergone reregistration, the Agency plans to follow a similar public participation process for the human health risk assessment for 1,3-D to ensure that human health risk assessment approaches are consistent, and that risk management decisions for the five other soil fumigants consider the relative risks and benefits of each chemical. Using this approach, EPA expects to address risks of concern for the five other fumigants while maintaining key use benefits. If, at the conclusion of the soil fumigant assessment and risk management process, EPA determines that it is appropriate to modify its 1998 risk mitigation decision for 1,3-D considering the relative risks and benefits of the others, EPA may relax certain measures or add new ones.

Comments should be limited to issues raised within the risk assessment. Failure to comment on any such issues as part of this opportunity will not limit a commenter's opportunity to participate in any later notice and comment processes on this matter. All comments should be submitted using the methods in Unit I. of the **SUPPLEMENTARY INFORMATION**, and must be received by EPA on or before the closing date. Comments will become part of the Agency Docket for 1,3-D. Comments received after the close of the comment period will be marked ''late.'' EPA is not required to consider these late comments.

B. What is the Agency's Authority for Taking this Action?

Section 4(g)(2) of FIFRA as amended directs that, after submission of all data concerning a pesticide active ingredient,''the Administrator shall determine whether pesticides containing such active ingredient are eligible for reregistration,'' before calling in product-specific data on individual end-use products and either reregistering products or taking other ''appropriate regulatory action.''

1,3-D was deemed eligible for reregistration in December 1998. EPA has developed a human health risk assessment for 1,3-D in order to make available current and accurate information on this pesticide which will be discussed as EPA assesses risks and develops risk management decisions, including reregistration decisions, for five other soil fumigants.

List of Subjects

Environmental protection, Pesticides and pests.

Dated:June 29, 2005.

Debra Edwards,

Director, Special Review and Reregistration Division, Office of Pesticide Programs.

[FR Doc. 05–13378 Filed 7–12–05; 8:45 am]

BILLING CODE 6560–50–S

ENVIRONMENTAL PROTECTION AGENCY

[OPP–2005–0151; FRL–7724–9]

Simazine Risk Assessments and Risk Reduction Options; Notice of Availability

AGENCY: Environmental Protection Agency (EPA).

ACTION: Notice.

SUMMARY: This notice announces the availability of EPA's human health and environmental fate and effects risk assessments and related documents for the chlorinated triazine pesticide simazine, and opens a public comment period on these documents. The public is encouraged to suggest risk management ideas or proposals to address the risks identified. EPA is developing an Interim Reregistration Eligibility Decision (IRED) for simazine through a modified, 4–Phase public participation process that the Agency uses to involve the public in developing pesticide reregistration and tolerance reassessment decisions. Through these programs, EPA is ensuring that all pesticides meet current health and safety standards.

DATES: Comments, identified by docket identification (ID) number OPP–2005–0151, must be received on or before September 12, 2005.

ADDRESSES: Comments may be submitted electronically, by mail, or through hand delivery/courier. Follow the detailed instructions as provided in Unit I. of the **SUPPLEMENTARY INFORMATION**.

FOR FURTHER INFORMATION CONTACT: Diane Sherman, Special Review and Reregistration Division (7508C), Office of Pesticide Programs, Environmental Protection Agency, 1200 Pennsylvania Ave., NW., Washington, DC 20460–0001; telephone number: (703) 308–0128 fax number: (703) 305–8041; e-mail address: *sherman.diane@epa.gov*.

SUPPLEMENTARY INFORMATION:

I. General Information

A. Does this Action Apply to Me?

This action is directed to the public in general, and may be of interest to a wide range of stakeholders including environmental, human health, and agricultural advocates; the chemical industry; pesticide users; and members of the public interested in the sale, distribution, or use of pesticides. Since others also may be interested, the Agency has not attempted to describe all the specific entities that may be affected by this action. If you have any questions regarding the applicability of this action to a particular entity, consult the person listed under **FOR FURTHER INFORMATION CONTACT**.

B. How Can I Get Copies of this Document and Other Related Information?

1. *Docket*. EPA has established an official public docket for this action under docket ID number OPP–2005–0151. The official public docket consists of the documents specifically referenced in this action, any public comments received, and other information related to this action. Although a part of the official docket, the public docket does not include Confidential Business Information (CBI) or other information whose disclosure is restricted by statute. The official public docket is the collection of materials that is available for public viewing at the Public Information and Records Integrity Branch (PIRIB), Rm. 119, Crystal Mall #2, 1801 S. Bell St., Arlington, VA. This docket facility is open from 8:30 a.m. to 4 p.m., Monday through Friday, excluding legal holidays. The docket telephone number is (703) 305–5805.

2. *Electronic access*. You may access this **Federal Register** document electronically through the EPA Internet under the ''**Federal Register**'' listings at *http://www.epa.gov/fedrgstr/*.

An electronic version of the public docket is available through EPA's electronic public docket and comment system, EPA Dockets. You may use EPA Dockets at *http://www.epa.gov/edocket/* to submit or view public comments, access the index listing of the contents of the official public docket, and to access those documents in the public docket that are available electronically. Once in the system, select ''search,'' then key in the appropriate docket ID number.

Certain types of information will not be placed in the EPA Dockets. Information claimed as CBI and other information whose disclosure is restricted by statute, which is not included in the official public docket, will not be available for public viewing in EPA's electronic public docket. EPA's policy is that copyrighted material will not be placed in EPA's electronic public docket but will be available only in printed, paper form in the official public docket. To the extent feasible, publicly available docket materials will be made available in EPA's electronic public docket. When a document is selected from the index list in EPA Dockets, the system will identify whether the document is available for viewing in EPA's electronic public docket. Although not all docket materials may be available electronically, you may still access any of the publicly available docket materials through the docket facility identified in Unit I.B.1. EPA intends to work towards providing electronic access to all of the publicly available docket materials through EPA's electronic public docket.

For public commenters, it is important to note that EPA's policy is that public comments, whether submitted electronically or in paper, will be made available for public viewing in EPA's electronic public docket as EPA receives them and without change, unless the comment contains copyrighted material, CBI, or other information whose disclosure is restricted by statute. When EPA identifies a comment containing copyrighted material, EPA will provide a reference to that material in the version of the comment that is placed in EPA's electronic public docket. The entire printed comment, including the copyrighted material, will be available in the public docket.

Public comments submitted on computer disks that are mailed or delivered to the docket will be transferred to EPA's electronic public docket. Public comments that are mailed or delivered to the docket will be scanned and placed in EPA's electronic public docket. Where practical, physical objects will be photographed, and the photograph will be placed in EPA's electronic public docket along with a brief description written by the docket staff.

C. How and to Whom Do I Submit Comments?

You may submit comments electronically, by mail, or through hand delivery/courier. To ensure proper receipt by EPA, identify the appropriate docket ID number in the subject line on the first page of your comment. Please ensure that your comments are submitted within the specified comment period. Comments received after the close of the comment period will be marked ''late.'' EPA is not required to consider these late comments. If you wish to submit CBI or information that is otherwise protected by statute, please follow the instructions in Unit I.D. Do not use EPA Dockets or e-mail to submit CBI or information protected by statute.

1. *Electronically*. If you submit an electronic comment as prescribed in this unit, EPA recommends that you include your name, mailing address, and an e-mail address or other contact information in the body of your comment. Also include this contact information on the outside of any disk or CD ROM you submit, and in any cover letter accompanying the disk or CD ROM. This ensures that you can be identified as the submitter of the comment and allows EPA to contact you in case EPA cannot read your comment due to technical difficulties or needs further information on the substance of your comment. EPA's policy is that EPA will not edit your comment, and any identifying or contact information provided in the body of a comment will be included as part of the comment that is placed in the official public docket, and made available in EPA's electronic public docket. If EPA cannot read your comment due to technical difficulties and cannot contact you for clarification, EPA may not be able to consider your comment.

i. *EPA Dockets*. Your use of EPA's electronic public docket to submit comments to EPA electronically is EPA's preferred method for receiving comments. Go directly to EPA Dockets at *http://www.epa.gov/edocket/*, and follow the online instructions for submitting comments. Once in the system, select ''search,'' and then key in docket ID number OPP–2005–0151. The system is an ''anonymous access'' system, which means EPA will not know your identity, e-mail address, or other contact information unless you provide it in the body of your comment.

ii. *E-mail*. Comments may be sent by e-mail to *opp-docket@epa.gov*, Attention: Docket ID Number OPP–2005–0151. In contrast to EPA's electronic public docket, EPA's e-mail system is not an ''anonymous access'' system. If you send an e-mail comment directly to the docket without going through EPA's electronic public docket, EPA's e-mail system automatically captures your e-mail address. E-mail addresses that are automatically captured by EPA's e-mail system are included as part of the comment that is placed in the official public docket, and made available in EPA's electronic public docket.

iii. *Disk or CD ROM*. You may submit comments on a disk or CD ROM that you mail to the mailing address

identified in Unit I.C.2. These electronic submissions will be accepted in WordPerfect or ASCII file format. Avoid the use of special characters and any form of encryption.

2. *By mail.* Send your comments to: Public Information and Records Integrity Branch (PIRIB) (7502C), Office of Pesticide Programs (OPP), Environmental Protection Agency, 1200 Pennsylvania Ave., NW., Washington, DC 20460–0001, Attention: Docket ID Number OPP–2005–0151.

3. *By hand delivery or courier.* Deliver your comments to: Public Information and Records Integrity Branch (PIRIB), Office of Pesticide Programs (OPP), Environmental Protection Agency, Rm. 119, Crystal Mall #2, 1801 S. Bell St., Arlington, VA, Attention: Docket ID Number OPP–2005–0151. Such deliveries are only accepted during the docket's normal hours of operation as identified in Unit I.B.1.

D. How Should I Submit CBI to the Agency?

Do not submit information that you consider to be CBI electronically through EPA's electronic public docket or by e-mail. You may claim information that you submit to EPA as CBI by marking any part or all of that information as CBI (if you submit CBI on disk or CD ROM, mark the outside of the disk or CD ROM as CBI and then identify electronically within the disk or CD ROM the specific information that is CBI). Information so marked will not be disclosed except in accordance with procedures set forth in 40 CFR part 2.

In addition to one complete version of the comment that includes any information claimed as CBI, a copy of the comment that does not contain the information claimed as CBI must be submitted for inclusion in the public docket and EPA's electronic public docket. If you submit the copy that does not contain CBI on disk or CD ROM, mark the outside of the disk or CD ROM clearly that it does not contain CBI. Information not marked as CBI will be included in the public docket and EPA's electronic public docket without prior notice. If you have any questions about CBI or the procedures for claiming CBI, please consult the person listed under **FOR FURTHER INFORMATION CONTACT**.

E. What Should I Consider as I Prepare My Comments for EPA?

You may find the following suggestions helpful for preparing your comments:

1. Explain your views as clearly as possible.
2. Describe any assumptions that you used.
3. Provide any technical information and/or data you used that support your views.
4. If you estimate potential burden or costs, explain how you arrived at your estimate.
5. Provide specific examples to illustrate your concerns.
6. Offer alternatives.
7. Make sure to submit your comments by the comment period deadline identified.
8. To ensure proper receipt by EPA, identify the appropriate docket ID number in the subject line on the first page of your response. It would also be helpful if you provided the name, date, and **Federal Register** citation related to your comments.

II. Background

A. What Action is the Agency Taking?

EPA is releasing for public comment its human health and environmental fate and effects risk assessments for simazine, and soliciting public comment on risk management ideas or proposals. Simazine is a systemic herbicide that is usually applied to soil, absorbed through leaves and roots, and acts by inhibiting photosynthesis within the targeted plant. It is widely used as a selective herbicide to control most annual grasses and broadleaf weeds before they emerge or after removal of weed growth. The Agency developed these risk assessments and the risk characterization for simazine through a modified version of its public process for making pesticide reregistration eligibility and tolerance reassessment decisions. Through these programs, EPA is ensuring that pesticides meet current standards under the Federal Insecticide, Fungicide, and Rodenticide Act (FIFRA) and the Federal Food, Drug, and Cosmetic Act (FFDCA), as amended by the Food Quality Protection Act of 1996 (FQPA).

Simazine is a chlorinated triazine class herbicide, a class which also includes the pesticides atrazine and propazine. Registered uses for simazine include pre-plant use or use in established fields of a variety of food and feed crops including fruit and nut crops in addition to field crops. Nonagricultural uses for simazine include application at forestry sites and as nonselective weed control on noncrop land. Simazine is also registered for use on turfgrass, which includes residential use on lawns. There is an additional registration for simazine as an algicide in ornamental ponds and aquariums of 1,000 gallons or less. End-use product formulations containing simazine include granules, pellets, dry flowables, wettable powders, emulsifiable concentrates, flowable concentrates, and ready-to-use liquids. These product formulations may be applied on the ground by broadcast across an area, as a spot treatment, or in rows, which is also referred to as band treatment. Some product formulations can also be applied by aerial broadcast.

EPA is providing an opportunity, through this notice, for interested parties to provide comments and input on the Agency's risk assessments for simazine. Such comments and input could address, for example, the availability of additional data to further refine the risk assessments, such as crop-specific or regional use information, or could address the Agency's risk assessment methodologies and assumptions as applied to this specific pesticide.

Through this notice, EPA also is providing an opportunity for interested parties to provide risk management proposals or otherwise comment on risk management for simazine. The major potential human health risks of concern associated with the use of simazine include the following for select use scenarios and subpopulations: chronic risks from dietary exposure from drinking water, short-term risks from dermal and inhalation residential exposure, and short- and intermediate-term risks from dermal and inhalation occupational exposure. The major potential ecological risks of concern include acute risks to aquatic and terrestrial plants and chronic risks to birds and mammals. Potential ecological risks are also present for some Federally listed threatened and endangered species. A summary of these potential risks of concern as well as specific questions for which the Agency is requesting public input, are provided in a separate document available in the simazine docket titled *Request for Additional Information and Risk Management Suggestions for the Reregistration of Simazine*. In targeting these risks of concern, the Agency solicits information on effective and practical risk reduction measures.

EPA seeks to achieve environmental justice, the fair treatment and meaningful involvement of all people, regardless of race, color, national origin, or income, in the development, implementation, and enforcement of environmental laws, regulations, and policies. To help address potential environmental justice issues, the Agency seeks information on any groups or segments of the population who, as a result of their location, cultural practices, or other factors, may have atypical, unusually high exposure to

simazine, compared to the general population.

EPA is applying the principles of public participation to all pesticides undergoing reregistration and tolerance reassessment. The Agency's Pesticide Tolerance Reassessment and Reregistration; Public Participation Process, published in the **Federal Register** on May 14, 2004, (69 FR 26819)(FRL–7357–9) explains that in conducting these programs, the Agency is tailoring its public participation process to be commensurate with the level of risk, extent of use, complexity of the issues, and degree of public concern associated with each pesticide. For simazine, a modified, 4–Phase process with 1 comment period and ample opportunity for public consultation seems appropriate in view of its refined risk assessments and the relatively limited risk management issues associated with simazine. However, if as a result of comments received during this comment period EPA finds that additional issues warranting further discussion are raised, the Agency may lengthen the process and include a second comment period, as needed. The decisions presented in the IRED may be supplemented by further risk mitigation measures when EPA considers its cumulative assessment of the chlorinated triazine pesticides.

All comments should be submitted using the methods in Unit I. of the **SUPPLEMENTARY INFORMATION**, and must be received by EPA on or before the closing date. Comments will become part of the Agency Docket for simazine. Comments received after the close of the comment period will be marked ''late.'' EPA is not required to consider these late comments.

B. What is the Agency's Authority for Taking this Action?

Section 4(g)(2) of FIFRA as amended directs that, after submission of all data concerning a pesticide active ingredient, ''the Administrator shall determine whether pesticides containing such active ingredient are eligible for reregistration,'' before calling in product specific data on individual end-use products and either reregistering products or taking other ''appropriate regulatory action.''

Section 408(q) of the FFDCA, 21 U.S.C. 346a(q), requires EPA to review tolerances and exemptions for pesticide residues in effect as of August 2, 1996, to determine whether the tolerance or exemption meets the requirements of section 408(b)(2) or (c)(2) of FFDCA. This review is to be completed by August 3, 2006.

List of Subjects

Environmental protection, Pesticides and pests.

Dated: July 7, 2005.

Peter Caulkins,

Acting Director, Special Review and Reregistration Division, Office of Pesticide Programs.

[FR Doc. 05–13779 Filed 7–12–05; 8:45 am]

BILLING CODE 6560–50–S

ENVIRONMENTAL PROTECTION AGENCY

[OPP–2005–0188; FRL–7722–5]

Pesticide Emergency Exemptions; Agency Decisions and State and Federal Agency Crisis Declarations

AGENCY: Environmental Protection Agency (EPA).

ACTION: Notice.

SUMMARY: EPA has granted or denied emergency exemptions under the Federal Insecticide, Fungicide, and Rodenticide Act (FIFRA) for use of pesticides as listed in this notice. The exemptions or denials were granted during the period January 1, 2005 to March 31, 2005 to control unforseen pest outbreaks.

FOR FURTHER INFORMATION CONTACT: See each emergency exemption or denial for the name of a contact person. The following information applies to all contact persons: Team Leader, Emergency Response Team, Registration Division (7505C), Office of Pesticide Programs, Environmental Protection Agency, 1200 Pennsylvania Ave., NW., Washington, DC 20460–0001; telephone number: (703) 308–9366.

SUPPLEMENTARY INFORMATION: EPA has granted or denied emergency exemptions to the following State and Federal agencies. The emergency exemptions may take the following form: Crisis, public health, quarantine, or specific. EPA has also listed denied emergency exemption requests in this notice.

I. General Information

A. Does this Action Apply to Me?

You may be potentially affected by this action if you are an agricultural producer, food manufacturer, or pesticide manufacturer. Potentially affected entities may include, but are not limited to:

- Crop production (NAICS code 111)
- Animal production (NAICS code 112)
- Food manufacturing (NAICS code 311)
- Pesticide manufacturing (NAICS code 32532)

This listing is not intended to be exhaustive, but rather provides a guide for readers regarding entities likely to be affected by this action. Other types of entities not listed in this unit could also be affected. The North American Industrial Classification System (NAICS) codes have been provided to assist you and others in determining whether this action might apply to certain entities. To determine whether you or your business may be affected by this action, you should carefully examine the applicability provisions discussed above. If you have any questions regarding the applicability of this action to a particular entity, consult the person listed under **FOR FURTHER INFORMATION CONTACT**.

B. How Can I Get Copies of this Document and Other Related Information?

1. *Docket*. EPA has established an official public docket for this action under docket identification number OPP–2005–0188. The official public docket consists of the documents specifically referenced in this action, any public comments received, and other information related to this action. Although a part of the official docket, the public docket does not include Confidential Business Information (CBI) or other information whose disclosure is restricted by statute. The official public docket is the collection of materials that is available for public viewing at the Public Information and Records Integrity Branch (PIRIB), Rm. 119, Crystal Mall #2, 1801 S. Bell St., Arlington, VA. This docket facility is open from 8:30 a.m. to 4 p.m., Monday through Friday, excluding legal holidays. The docket telephone number is (703) 305–5805.

2. *Electronic access*. You may access this **Federal Register** document electronically through the EPA Internet under the ''**Federal Register**'' listings at *http://www.epa.gov/fedrgstr/*.

An electronic version of the public docket is available through EPA's electronic public docket and comment system, EPA Dockets. You may use EPA Dockets at *http://www.epa.gov/edocket/* to submit or view public comments, access the index listing of the contents of the official public docket, and to access those documents in the public docket that are available electronically. Although not all docket materials may be available electronically, you may still access any of the publicly available docket materials through the docket facility identified in Unit I.B.1. Once in

the system, select ''search,'' then key in the appropriate docket ID number.

II. Background

Under FIFRA section 18, EPA can authorize the use of a pesticide when emergency conditions exist. Authorizations (commonly called emergency exemptions) are granted to State and Federal agencies and are of four types:

1. A ''specific exemption'' authorizes use of a pesticide against specific pests on a limited acreage in a particular State. Most emergency exemptions are specific exemptions.

2. ''Quarantine'' and ''public health'' exemptions are a particular form of specific exemption issued for quarantine or public health purposes. These are rarely requested.

3. A ''crisis exemption'' is initiated by a State or Federal agency (and is confirmed by EPA) when there is insufficient time to request and obtain EPA permission for use of a pesticide in an emergency.

EPA may deny an emergency exemption: If the State or Federal agency cannot demonstrate that an emergency exists, if the use poses unacceptable risks to the environment, or if EPA cannot reach a conclusion that the proposed pesticide use is likely to result in ''a reasonable certainty of no harm'' to human health, including exposure of residues of the pesticide to infants and children.

If the emergency use of the pesticide on a food or feed commodity would result in pesticide chemical residues, EPA establishes a time-limited tolerance meeting the ''reasonable certainty of no harm standard'' of the Federal Food, Drug, and Cosmetic Act (FFDCA).

In this document: EPA identifies the State or Federal agency granted the exemption or denial, the type of exemption, the pesticide authorized and the pests, the crop or use for which authorized, number of acres (if applicable), and the duration of the exemption. EPA also gives the **Federal Register** citation for the time-limited tolerance, if any.

III. Emergency Exemptions and Denials

A. U. S. States and Territories

Alabama

Department of Agriculture and Industries
Specific: EPA authorized the use of coumaphos in beehives to control varroa mites and small hive beetles; February 7, 2005 to February 1, 2006. Contact: (Barbara Madden)

California

Environmental Protection Agency, Department of Pesticide Regulation
Crisis: On August 30, 2004, for the use of spinosad on green onions to control thrips. This program ended on October 31, 2004. Contact: (Andrew Ertman)
Specific: EPA authorized the use of thiamethoxam on artichoke to control proba bug; January 14, 2005 to January 14, 2006. Contact: (Barbara Madden)
EPA authorized the use of maneb on walnut to control bacterial blight; March 1, 2005 to June 15, 2005. Contact: (Libby Pemberton)
EPA authorized the use of myclobutanil on peppers to control powdery mildew (*Oidiopsis taurica*); June 1, 2005 to May 31, 2006. Contact: (Libby Pemberton)
EPA authorized the use of oxytetracycline in apples to control fire blight; March 11, 2005 to August 1, 2005. Contact: (Andrea Conrath)
EPA authorized the use of tebuconazole on garlic to control garlic rust (*Puccinia porri - P. allii*); March 16, 2005 to July 3, 2005. Contact: (Libby Pemberton)
EPA authorized the use of spiromesifen on pepper to control potato psyllid Bactericera (*Paratrioza cockerelli*); March 25, 2005 to November 30, 2005. Contact: (Libby Pemberton)

Colorado

Department of Agriculture
Specific: EPA authorized the use of coumaphos in beehives to control varroa mites and small hive beetles; February 7, 2005 to February 1, 2006. Contact: (Barbara Madden)
EPA authorized the use of difenoconazole on sweet corn seed to control damping off and die-back disease; March 11, 2005 to March 10, 2006. Contact: (Andrea Conrath)
EPA authorized the use of tebuconazole on sunflower to control rust (*Puccinia helianthi*); July 1, 2005 to August 25, 2005. Contact: (Libby Pemberton)

Connecticut

Department of Environmental Protection
Specific: EPA authorized the use of azoxystrobin on tobacco to control blue mold (*Peronospora tabacina*) March 30, 2005 to December 31, 2005. Contact: (Libby Pemberton)
EPA authorized the use of maneb on walnut to control bacterial blight; March 1, 2005 to June 15, 2005. Contact: (Libby Pemberton)

Delaware

Department of Agriculture
Specific: EPA authorized the use of thiophanate methyl in mushroom cultivation to control green mold; January 7, 2005 to January 7, 2006. Contact: (Andrea Conrath)
EPA authorized the use of coumaphos in beehives to control varroa mites and small hive beetles; February 7, 2005 to February 1, 2006. Contact: (Barbara Madden)

Florida

Department of Agriculture and Consumer Services
Specific: EPA authorized the use of Pyriproxyfen in legumes to control Whitefly; February 9, 2005 to February 9, 2006. Contact: (Andrea Conrath)
EPA authorized the use of thiophanate methyl in citrus to control post-bloom fruit drop and stem end rot; March 2, 2005 to March 2, 2006. Contact: (Andrea Conrath)

Georgia

Department of Agriculture
Specific: EPA authorized the use of coumaphos in beehives to control varroa mites and small hive beetles; February 2, 2005 to February 1, 2006. Contact: (Barbara Madden)
EPA authorized the use of the formulated product ApiLife VAR containing thymol, eucalyptus oil, and L-menthol in beehives to control varroa mites; February 23, 2005 to December 1, 2005. Contact: (Barbara Madden)

Idaho

Department of Agriculture
Specific: EPA authorized the use of the formulated product ApiLife VAR containing thymol, eucalyptus oil, and L-menthol in beehives to control varroa mites; February 17, 2005 to December 1, 2005. Contact: (Barbara Madden)
EPA authorized the use of thiabendazole in lentils to control Ascochyta Blight; February 22, 2005 to June 1, 2005. Contact: (Andrea Conrath)
EPA authorized the use of difenoconazole on sweet corn seed to control damping off and die-back disease; March 11, 2005 to March 10, 2006. Contact: (Andrea Conrath)
EPA authorized the use of oxytetracycline in apples to control fire blight; March 11, 2005 to August 1, 2005. Contact: (Andrea Conrath)

Illinois

Department of Agriculture
Specific: EPA authorized the use of coumaphos in beehives to control varroa mites and small hive beetles; February 7, 2005 to February 1, 2006. Contact: (Barbara Madden)
EPA authorized the use of the formulated product ApiLife VAR containing thymol, eucalyptus oil, and L-menthol in beehives to control varroa mites; February 7, 2005 to December 1, 2005. Contact: (Barbara Madden)

Indiana

Office of Indiana State Chemist
Specific: EPA authorized the use of coumaphos in beehives to control varroa

mites and small hive beetles; February 23, 2005 to February 1, 2006. Contact: (Barbara Madden)
EPA authorized the use of fenbuconazole in blueberries to control mummyberry disease; March 10, 2005 to September 30, 2005. Contact: (Andrea Conrath)

Kansas

Department of Agriculture
Specific: EPA authorized the use of coumaphos in beehives to control varroa mites and small hive beetles; February 7, 2005 to February 1, 2006. Contact: (Barbara Madden)

Maryland

Department of Agriculture
Specific: EPA authorized the use of thiophanate methyl in mushroom cultivation to control green mold; January 7, 2005 to January 7, 2006. Contact: (Andrea Conrath)
EPA authorized the use of coumaphos in beehives to control varroa mites and small hive beetles; February 7, 2005 to February 1, 2006. Contact: (Barbara Madden)
EPA authorized the use of the formulated product ApiLife VAR containing thymol, eucalyptus oil, and L-menthol in beehives to control varroa mites; February 7, 2005 to December 1, 2005. Contact: (Barbara Madden)

Massachusetts

Massachusetts Department of Food and Agriculture
Specific: EPA authorized the use of azoxystrobin on tobacco to control blue mold (*Peronospora tabacina*) March 30, 2005 to December 31, 2005. Contact: (Libby Pemberton)

Michigan

Michigan Department of Agriculture
Specific: EPA authorized the use of the formulated product ApiLife VAR containing thymol, eucalyptus oil, and L-menthol in beehives to control varroa mites; February 17, 2005 to December 1, 2005. Contact: (Barbara Madden)
EPA authorized the use of fenbuconazole in blueberries to control mummyberry disease; March 10, 2005 to September 1, 2005. Contact: (Andrea Conrath)
EPA authorized the use of oxytetracycline in apples to control fire blight; March 11, 2005 to June 30, 2005. Contact: (Andrea Conrath)
EPA authorized the use of tebuconazole on asparagus to control asparagus rust (*Puccinia asparagi*); March 16, 2005 to November 1, 2005. Contact: (Libby Pemberton)

Minnesota

Department of Agriculture
Crisis: EPA authorized the use of tetraconazole on soybeans to control soybean rust; March 2, 2005, to March 1, 2008. Contact: (Andrew Ertman)
Specific: EPA authorized the use of the formulated product ApiLife VAR containing thymol, eucalyptus oil, and L-menthol in beehives to control varroa mites; January 30, 2005 to December 1, 2005. Contact: (Barbara Madden)

Mississippi

Department of Agriculture and Commerce
Specific: EPA authorized the use of coumaphos in beehives to control varroa mites and small hive beetles; February 23, 2005 to February 1, 2006. Contact: (Barbara Madden)
EPA authorized the use of the formulated product ApiLife VAR containing thymol, eucalyptus oil, and L-menthol in beehives to control varroa mites; February 23, 2005 to December 1, 2005. Contact: (Barbara Madden)

Missouri

Department of Agriculture
Specific: EPA authorized the use of coumaphos in beehives to control varroa mites and small hive beetles; February 7, 2005 to February 1, 2006. Contact: (Barbara Madden)

Montana

Department of Agriculture
Specific: EPA authorized the use of thiabendazole in lentils to control Ascochyta Blight; March 11, 2005 to June 1, 2005. Contact: (Andrea Conrath)

New Hampshire

Department of Agriculture
Specific: EPA authorized the use of fenbuconazole in blueberries to control mummyberry disease; March 10, 2005 to August 31, 2005. Contact: (Andrea Conrath)

New York

Department of Environmental Conservation
Specific: EPA authorized the use of coumaphos in beehives to control varroa mites and small hive beetles; February 2, 2005 to February 1, 2006. Contact: (Barbara Madden)
EPA authorized the use of desmedipham on red (table) beets to control several important broadleaf weeds, including hairy galinsoga, common ragweed, redroot pigweed, common lambsquarters, velvetleaf, nightshade *spp*. and wild mustard; February 2, 2005 to August 15, 2005. Contact: (Libby Pemberton)
EPA authorized the use of fenbuconazole in blueberries to control mummyberry disease; March 10, 2005 to June 30, 2005. Contact: (Andrea Conrath)

North Carolina

Department of Agriculture
Specific: EPA authorized the use of coumaphos in beehives to control varroa mites and small hive beetles; February 2, 2005 to February 1, 2006. Contact: (Barbara Madden)
EPA authorized the use of fenbuconazole in blueberries to control mummyberry disease; March 10, 2005 to August 31, 2005. Contact: (Andrea Conrath)

North Dakota

Department of Agriculture
Specific: EPA authorized the use of thiabendazole in lentils to control Ascochyta Blight; February 22, 2005 to June 1, 2005. Contact: (Andrea Conrath)

Oklahoma

Department of Agriculture
Specific: EPA authorized the use of coumaphos in beehives to control varroa mites and small hive beetles; February 2, 2005 to February 1, 2006. Contact: (Barbara Madden)

Oregon

Department of Agriculture
Specific: EPA authorized the use of coumaphos in beehives to control varroa mites and small hive beetles; February 7, 2005 to February 1, 2006. Contact: (Barbara Madden)
EPA authorized the use of the formulated product ApiLife VAR containing thymol, eucalyptus oil, and L-menthol in beehives to control varroa mites; February 7, 2005 to December 1, 2005. Contact: (Barbara Madden)
EPA authorized the use of propiconazole on filberts to control Eastern Filbert Blight; February 9, 2005 to May 30, 2005. Contact: (Andrea Conrath)
EPA authorized the use of thiabendazole in lentils to control Ascochyta Blight; February 22, 2005 to June 1, 2005. Contact: (Andrea Conrath)
EPA authorized the use of fenbuconazole in blueberries to control mummyberry disease; March 10, 2005 to May 31, 2005. Contact: (Andrea Conrath)
EPA authorized the use of sulfentrazone on strawberries to control broadleaf weeds; March 11, 2005 to February 28, 2006. Contact: (Andrew Ertman)
EPA authorized the use of oxytetracycline in apples to control fire blight; March 11, 2005 to August 1, 2005. Contact: (Andrea Conrath)

Pennsylvania

Department of Agriculture
Specific: EPA authorized the use of the formulated product ApiLife VAR containing thymol, eucalyptus oil, and

L-menthol in beehives to control varroa mites; January 30, 2005 to December 1, 2005. Contact: (Barbara Madden)

EPA authorized the use of thiophanate methyl in mushroom cultivation to control green mold; January 7, 2005 to January 7, 2006. Contact: (Andrea Conrath)

EPA authorized the use of coumaphos in beehives to control varroa mites and small hive beetles; February 7, 2005 to February 1, 2006. Contact: (Barbara Madden)

EPA authorized the use of fenbuconazole in blueberries to control mummyberry disease; March 10, 2005 to September 1, 2005. Contact: (Andrea Conrath)

South Carolina

Clemson University

Specific: EPA authorized the use of coumaphos in beehives to control varroa mites and small hive beetles; February 23, 2005 to February 1, 2006. Contact: (Barbara Madden)

South Dakota

Department of Agriculture

Quarantine: EPA authorized the use of tetraconazole on soybeans to control soybean rust; March 2, 2005, to March 1, 2008. Contact: (Andrew Ertman)

Tennessee

Department of Agriculture

Specific: EPA authorized the use of coumaphos in beehives to control varroa mites and small hive beetles; February 23, 2005 to February 1, 2006. Contact: (Barbara Madden)

Texas

Department of Agriculture

Specific: EPA authorized the use of coumaphos in beehives to control varroa mites and small hive beetles; February 2, 2005 to February 1, 2006. Contact: (Barbara Madden)

Utah

Department of Agriculture

Specific: EPA authorized the use of coumaphos in beehives to control varroa mites and small hive beetles; February 23, 2005 to February 1, 2006. Contact: (Barbara Madden)

EPA authorized the use of the formulated product ApiLife VAR containing thymol, eucalyptus oil, and L-menthol in beehives to control varroa mites; February 23, 2005 to December 1, 2005. Contact: (Barbara Madden)

Washington

Department of Agriculture

Specific: EPA authorized the use of the formulated product ApiLife VAR containing thymol, eucalyptus oil, and L-menthol in beehives to control varroa mites; January 30, 2005 to December 1, 2005. Contact: (Barbara Madden)

EPA authorized the use of coumaophos in beehives to control varroa mites and small hive beetles; February 7, 2005 to February 1, 2006. Contact: (Barbara Madden)

EPA authorized the use of propiconazole on filberts to control Eastern Filbert Blight; February 9, 2005 to May 30, 2005. Contact: (Andrea Conrath)

EPA authorized the use of thiabendazole in lentils to control Ascochyta Blight; February 22, 2005 to June 1, 2005. Contact: (Andrea Conrath)

EPA authorized the use of sulfentrazone on strawberries to control broadleaf weeds; March 2, 2005 to February 28, 2006. Contact: (Andrew Ertman)

EPA authorized the use of fenbuconazole in blueberries to control mummyberry disease; March 10, 2005 to June 10, 2005. Contact: (Andrea Conrath)

EPA authorized the use of oxytetracycline in apples to control fire blight; March 11, 2005 to August 1, 2005. Contact: (Andrea Conrath)

West Virginia

Department of Agriculture

Specific: EPA authorized the use of coumaphos in beehives to control varroa mites and small hive beetles; February 2, 2005 to February 1, 2006. Contact: (Barbara Madden)

Wisconsin

Department of Agriculture, Trade, and Consumer Protection

Specific: EPA authorized the use of sulfentrazone on strawberries to control broadleaf weeds; June 20, 2005 to December 15, 2005. Contact: (Andrew Ertman)

List of Subjects

Environmental protection, Pesticides and pest.

June 29, 2005.

Lois Rossi,

Director, Registration Division, Office of Pesticide Programs.

[FR Doc. 05–13780 Filed 7–12–05; 8:45 am]

BILLING CODE 6560–50–S

ENVIRONMENTAL PROTECTION AGENCY

[FRL–7938–2]

Notice of Tentative Approval and Solicitation of Request for a Public Hearing for Public Water System Supervision Program Revision for the Commonwealth of Pennsylvania

AGENCY: Environmental Protection Agency (EPA).

ACTION: Notice of tentative approval and Solicitation of Requests for a Public Hearing.

SUMMARY: Notice is hereby given in accordance with the provision of Section 1413 of the Safe Drinking Water Act as amended, and the National Primary Drinking Water Implementation Regulations that the Commonwealth of Pennsylvania is revising its approved Public Water System Supervision Program. Pennsylvania has adopted the Long Term 1 Enhanced Surface Water Treatment Rule to improve control of microbial pathogens in drinking water, including specifically the protozoan Cryptosporidium, and the Filter Backwash Recycling Rule to require water systems to institute changes to return recycle flows of a plant's treatment process that may compromise pathogen treatment.

EPA has determined that these revisions are no less stringent than the corresponding Federal regulations except for one minor omission to the Commonwealth's regulations. The item concerns Tier 3 public notification for reporting violations. This omission will be addressed through a future rulemaking. The Pennsylvania Department of Environmental Protection committed to complete this rulemaking in a letter of intent from the Chief of the Division of Drinking Water Management dated March 29, 2005. This letter includes the draft content of the regulatory change and a schedule, with milestones, for completing this revision. Therefore, EPA is taking action to tentatively approve these program revisions. All interested parties are invited to submit written comments on this determination and may request a public hearing.

DATES: Comments or a request for a public hearing must be submitted by August 12, 2005. This determination shall become effective on August 12, 2005 if no timely and appropriate request for a hearing is received and the Regional Administrator does not elect on his own to hold a hearing, and if no comments are received which cause EPA to modify its tentative approval.

ADDRESSES: Comments or a request for a public hearing must be submitted to the U.S. Environmental Protection Agency Region III, 1650 Arch Street, Philadelphia, PA 19103–2029. Comments only may be submitted electronically to Jason Gambatese at *gambatese.jason@epa.gov.*

All documents relating to this determination are available for inspection between the hours of 8 a.m. and 4:30 p.m., Monday through Friday, at the following offices:

- Drinking Water Branch, Water Protection Division, U.S. Environmental Protection Agency Region III, 1650 Arch Street, Philadelphia, PA 19103–2029.
- Pennsylvania Department of Environmental Protection, Bureau of Water Supply and Wastewater Management, 11th Floor, Rachel Carson State Office Building Harrisburg, 400 Market Street, Harrisburg, PA 17105–8467.

FOR FURTHER INFORMATION CONTACT: Jason Gambatese, Drinking Water Branch at the Philadelphia address given above; telephone (215) 814–5759 or fax (215) 814–2318.

SUPPLEMENTARY INFORMATION: All interested parties are invited to submit written comments on this determination and may request a public hearing. All comments will be considered, and, if necessary, EPA will issue a response. Frivolous or insubstantial requests for a hearing may be denied by the Regional Administrator. However, if a substantial request for a public hearing is made by August 12, 2005, a public hearing will be held. A request for public hearing shall include the following: (1) The name, address, and telephone number of the individual, organization, or other entity requesting a hearing; (2) a brief statement of the requesting person's interest in the Regional Administrator's determination and of information that the requesting person intends to submit at such a hearing; and (3) the signature of the individual making the request; or, if the request is made on behalf of an organization or other entity, the signature of a responsible official of the organization or other entity.

Dated: July 6, 2005.

Donald S. Welsh,

Regional Administrator, EPA, Region III.

[FR Doc. 05–13785 Filed 7–12–05; 8:45 am]

BILLING CODE 6560–50–P

FEDERAL ACCOUNTING STANDARDS ADVISORY BOARD

Notice of Public Hearing and Publication of Accounting Standard

Board Action: Pursuant to 31 U.S.C. 3511(d), the Federal Advisory Committee Act (Pub. L. No. 92–463), as amended, and the FASAB Rules Of Procedure, as amended in 2004, notice is hereby given that the Federal Accounting Standards Advisory Board (FASAB) will hold a public hearing in conjunction with its August 17–18, 2005 Board Meeting to hear comments on a recently published exposure draft—*Accounting for Fiduciary Activities.* The public hearing will also permit the Board to ask questions about information and points of view submitted by respondents. Those interested in testifying should contact Eileen Parlow, Assistant Director, no later than two weeks prior to the hearing and provide a short biography and written copies of prepared testimony. Ms. Parlow can be reached at 202–512–7356 or via e-mail at *parlowe@fasab.gov.* The ED is available on the FASAB Web site *http://www.fasab.gov* under Exposure Drafts.

Any interested person may attend the meeting as an observer. Building security requires advance notice of your attendance. Please call 202–512–7350 at least one day prior to the meeting.

Board Action: Pursuant to 31 U.S.C. 3511(d), the Federal Advisory Committee Act (Pub. L. No. 92–463), as amended, and the FASAB Rules Of Procedure, as amended in 2004, notice is hereby given that the FASAB has issued Statement of Federal Financial Accounting Standards (SFFAS) 29, Heritage Assets and Stewardship Land. The statement is available on the FASAB Web site at *http://www.fasab.gov/standards.html.*

FOR FURTHER INFORMATION, CONTACT: Wendy M. Comes, Executive Director, 441 G St., NW., Mail Stop 6K17V, Washington, DC 20548, or call (202) 512–7350.

Authority: Federal Advisory Committee Act. Pub. L. No. 92–463.

Dated: July 7, 2005.

Charles Jackson,

Federal Register Liaison Officer.

[FR Doc. 05–13758 Filed 7–12–05; 8:45 am]

BILLING CODE 1610–01–M

FEDERAL COMMUNICATIONS COMMISSION

[DA 05–1727]

Notice of Debarment

AGENCY: Federal Communications Commission.

ACTION: Notice.

SUMMARY: The Enforcement Bureau (''Bureau'') debars Mr. John Henry Weaver from the schools and libraries universal service support mechanism (or ''E-Rate program'') for a period of three years.

DATES: Debarment commences on the date Mr. Weaver receives the debarment letter or July 13, 2005, whichever date come first, for a period of three years.

FOR FURTHER INFORMATION CONTACT: Diana Lee, Federal Communications Commission, Enforcement Bureau, Investigations and Hearings Division, Room 4–C330, 445 12th Street, SW., Washington, DC 20554. Diana Lee may be contacted by phone at (202) 418–0843 or e-mail at *diana.lee@fcc.gov.*

SUPPLEMENTARY INFORMATION: The Bureau has debarred Mr. Weaver from the schools and libraries universal service support mechanism for a period of three year pursuant to 47 CFR 521 and 47 CFR 0.111(a)(14). The Commission previously suspended Mr. Weaver from the schools and libraries mechanism, pending debarment proceedings. See 70 FR 12883, March 16, 2005. Attached is the debarment letter, Notice of Debarment, DA 05–1727, which was mailed to Mr. Weaver and released on June 23, 2005, that in turn attached the suspension letter, Notice of Suspension and of Proposed Debarment, DA 05–607. The complete text of the debarment letter, including attachment 1 the suspension letter, is available for public inspection and copying during regular business hours at the FCC Reference Information Center, Portal II, 445 12th Street, SW., Room CY–A257, Washington, DC 20554, In addition, the complete text is available on the FCC's Web site at *http://www.fcc.gov.* The text may also be purchased from the Commission's duplicating contractor, Best Copy and Printing, Inc., Portal II, 445 12th Street, SW., Room CY–B420, Washington, DC 20554, telephone (202) 488–5300 or (800) 378–3160, facsimile (202) 488–5563, or via e-mail *http://www.bcpiweb.com.*

Federal Communications Commission.

William H. Davenport,

Chief, Investigations and Hearings Division, Enforcement Bureau.

The notice of debarment and suspension letters follows:

June 23, 2005.

Via certified mail, return receipt requested

John Henry Weaver, 146 Weldon Drive, York, PA 17404.

Re: Notice of Debarment, File No. EB–03–IH–0684

Dear Mr. Weaver: Pursuant to section 54.521 of the rules of the Federal Communications Commission (the ''Commission''), by this Notice of Debarment you are hereby debarred from the schools and libraries universal service support mechanism (or ''E-Rate program'') for a period of three years.[1]

On March 8, 2005, the Enforcement Bureau (the ''Bureau'') sent you a Notice of Suspension and Proposed Debarment (the ''Notice of Suspension'').[2] That Notice of Suspension was published in the **Federal Register** on March 16, 2005.[3] The Notice of Suspension suspended you from the schools and libraries universal service support mechanism and described the basis for your proposed debarment, the applicable debarment procedures, and the effect of debarment.[4]

Pursuant to the Commission's rules, any opposition to your suspension or its scope or to your proposed debarment or its scope had to be filed with the Commission no later than thirty (30) calendar days from the earlier date of your receipt of the Notice of Suspension or publication of the Notice of Suspension in the **Federal Register**.[5] The Commission did not receive any such opposition.

As discussed in the Notice of Suspension, on or about March 1, 2005, you were convicted of participating in a conspiracy that involves receiving $1.9 million in kickback payments from Ronald R. Morrett of EMO Communications, Inc., while you were responsible for certifying that the company had performed work specified in a contract that is 80 percent funded by the E-Rate program, and concealing those payments by causing some of the payments to be funneled through various bank accounts belonging to third parties.[6] Such conduct constitutes the basis for your debarment, and your conviction falls within the categories of causes for debarment under section 54.521(c) of the Commission's rules.[7] For the foregoing reasons, you are hereby debarred for a period of three years from the debarment date, *i.e.*, the earlier date of your receipt of this Notice of Debarment or its publication date in the **Federal Register**.[8] Debarment excludes you, for the debarment period, from activities ''associated with or related to the schools and libraries support mechanism,'' including ''the receipt of funds or discounted services through the schools and libraries support mechanism, or consulting with, assisting, or advising applicants or service providers regarding the schools and libraries support mechanism.''[9]

Sincerely,

William H. Davenport,

Chief, Investigations and Hearings Division, Enforcement Bureau.

cc: Gerald Lord, Esq., Miller, Poole & Lord, LLP; Kristy Carroll, Esq., USAC (E-mail); Marty Carlson, Esq., Assistant United States Attorney, Middle District of Pennsylvania (E-mail).

Attachment 1

March 8, 2005.

[DA 05–607]

Via Certified Mail

Return Receipt Requested

John Henry Weaver, 146 Weldon Drive, York, PA 17404.

Re: Notice of Suspension and of Proposed Debarment; File No. EB–03–IH–0684

Dear Mr. Weaver: The Federal Communications Commission (''FCC'' or ''Commission'') has received notice of your March 1, 2005 conviction pursuant to 18 U.S.C. 371 and 666 for conspiracy to engage in bribery in a federally funded program.[1] Consequently, pursuant to 47 CFR 54.521, this letter constitutes official notice of your suspension from the schools and libraries universal service support mechanism. In addition, the Enforcement Bureau (''Bureau'') hereby notifies you that we are commencing debarment proceedings against you.[2]

I. Notice of Suspension

Pursuant to section 54.521(a)(4) of the Commission's rules,[3] your conviction requires the Bureau to suspend you from participating in any activities associated with or related to the schools and libraries fund mechanism, including the receipt of funds or discounted services through the schools and libraries fund mechanism, or consulting with, assisting, or advising applicants or service providers regarding the schools and libraries support mechanism.[4] Your suspension becomes effective upon the earlier of your receipt of this letter or publication of notice in the **Federal Register**.[5]

Suspension is immediate pending the Bureau's final debarment determination. You may contest this suspension or the scope of this suspension by filing arguments in opposition to the suspension, with any relevant documentation. Your request must be received within 30 days after you receive this letter or after notice is published in the **Federal Register**, whichever comes first.[6] Such requests, however, will not ordinarily be granted.[7] The Bureau may reverse or limit the scope of suspension only upon a finding of extraordinary circumstances.[8] Absent extraordinary circumstances, the Bureau will decide any request for reversal or modification of suspension within 90 days of its receipt of such request.[9]

II. Notice of Proposed Debarment

A. Reasons for and Cause of Debarment

Commission rules establish procedures to prevent persons who have ''defrauded the government or engaged in similar acts through activities associated with or related to the schools and libraries support mechanism'' from receiving the benefits associated with that program.[10] On March 1, 2005, you were convicted based on a December 8, 2003 plea of guilty to participating in a conspiracy with Ronald R. Morrett, Jr. (''Morrett'') of EMO Communications, Inc. (''EMO'').[11] You admitted to the following acts: (1) Receiving $1.9 million in kickback payments from Morrett while you were responsible for certifying Morrett and EMO had performed work specified in a contract that is 80% funded by the federal E-rate program; and (2) concealing those payments by causing some of the payments to be funneled through various bank accounts belonging to third parties.[12] These actions constitute the

[1] *See* 47 CFR 0.111(a)(14), 54.521.

[2] Letter from William H. Davenport, Chief, Investigations and Hearings Division, Enforcement Bureau, Federal Communications Commission, to John Henry Weaver, Notice of Suspension and Proposed Debarment, 20 FCC Rcd 5130 (Inv. & Hearings Div., Enf. Bur. 2005) (Attachment 1).

[3] 70 FR 12883 (Mar. 16, 2005).

[4] *See* Notice of Suspension, 20 FCC Rcd at 5130–32.

[5] *See* 47 CFR 54.521(e)(3) and (4). That date occurred no later than April 15, 2005. *See supra* note 3.

[6] Notice of Suspension, 20 FCC Rcd at 5131.

[7] *Id.* at 5132; 47 CFR 54.521(c).

[8] *See* Notice of Suspension, 20 FCC Rcd at 5131–32.

[9] *See* 47 CFR 54.521(a)(1), 54.521(a)(5), 54.521(d); Notice of Suspension, 20 FCC Rcd at 5132.

[1] Any further reference in this letter to ''your conviction'' refers to your March 1, 2005 conviction based on your December 8, 2003 guilty plea to this count because you ''did knowingly combine, conspire, confederate and agree with persons * * * to corruptly give, offer and agree to give things of value to another person with the intent to influence an agent of the Harrisburg School District.'' *See United States* v. *Weaver,* Criminal Docket No. 03–337, Information at 4 (M.D.Pa. filed December 8, 2003) (''*Weaver Information*''); *United States* v. *Weaver,* Criminal Docket No. 03–337, Plea Agreement at 1–2 (M.D.Pa. filed December 8, 2003) (''*Weaver Plea Agreement*''); *United States* v. *Weaver,* Judgment (M.D.Pa. filed on March 1, 2005 and entered on March 4, 2005) (''*Weaver Judgment*'').

[2] 47 CFR 54.521; 47 CFR 0.111(a)(14) (delegating to the Enforcement Bureau authority to resolve universal service suspension and debarment proceedings pursuant to 47 CFR 54.521).

[3] 47 CFR 54.521(a)(4). *See Schools and Libraries Universal Service Support Mechanism,* Second Report and Order and Further Notice of Proposed Rulemaking, 18 FCC Rcd 9202, 9225–9227, ¶¶ 67–74 (2003) (''*Second Report and Order*'').

[4] Second Report and Order, 18 FCC Rcd at 9225, ¶ 67; 47 U.S.C. 254; 47 CFR 54.502–54.503; 47 CFR 54.521(a)(4).

[5] Second Report and Order, 18 FCC Rcd at 9226, ¶ 69; 47 CFR 54.521(e)(1).

[6] *See* Second Report and Order, 18 FCC Rcd at 9226, ¶ 70; 47 CFR 54.521(e)(4).

[7] Second Report and Order, 18 FCC Red at 9226, ¶ 70.

[8] 47 CFR 54.521(f).

[9] Second Report and Order, 18 FCC Rcd at 9226, ¶ 70; 47 CFR 54.521(e)(5), 54.521(f).

[10] Second Report and Order, 18 FCC Rcd at 9225, ¶ 66.

[11] Weaver Judgment at 1; Weaver Plea Agreement at 1–2.

[12] Weaver Information 2–3, 6–7; Weaver Plea Agreement at 1–2.

conduct or transactions upon which this debarment proceeding is based.[13] Moreover, your conviction on the basis of these acts falls within the categories of causes for debarment defined in section 54.521(c) of the Commission's rules.[14] Therefore, pursuant to section 54.521(a)(4) of the Commission's rules, your conviction requires the Bureau to commence debarment proceedings against you.

B. Debarment Procedures

You may contest debarment or the scope of the proposed debarment by filing arguments and any relevant documentation within 30 calendar days of the earlier of the receipt of this letter or of publication in the **Federal Register**.[15] Absent extraordinary circumstances, the Bureau will debar you.[16] Within 90 days of receipt of any opposition to your suspension and proposed debarment, the Bureau, in the absence of extraordinary circumstances, will provide you with notice of its decision to debar.[17] If the Bureau decides to debar you, its decision will become effective upon the earlier of your receipt of a debarment notice or publication of its decision in the **Federal Register**.[18]

C. Effect of Debarment

If and when your debarment becomes effective, you will be prohibited from participating in activities associated with or related to the schools and libraries support mechanism for at least three years from the date of debarment.[19] The Bureau may, if necessary to protect the public interest, extend the debarment period.[20]

Please direct any responses to the following address: Diana Lee, Federal Communications Commission, Enforcement Bureau, Investigations and Hearings Division, Room 4–C443, 445 12th Street, SW., Washington, DC 20554.

If you submit your response via hand-delivery or non-United States Postal Service delivery (*e.g.*, Federal Express, DHL, etc.), please send your response to Ms. Lee at the following address: Federal Communications Commission, 9300 East Hampton Drive, Capitol Heights, MD 20743.

If you have any questions, please contact Ms. Lee via mail, by telephone at (202) 418–1420 or by e-mail at *diana.lee@fcc.gov.* If Ms. Lee is unavailable, you may contact Hillary DeNigro by telephone at (202) 418–1420 and by e-mail at *hillary.denigro@fcc.gov.*

Sincerely yours,

William H. Davenport,
Chief,
Investigations and Hearings Division,
Enforcement Bureau.

cc: Gerald Lord, Miller, Poole & Lord, LLP, Kristy Carroll, USAC (E-mail), Marty Carlson, United States Attorney, Middle District of Pennsylvania (E-mail).

[FR Doc. 05–13748 Filed 7–12–05; 8:45 am]

BILLING CODE 6712–01–P

[13] Second Report and Order, 18 FCC Rcd at 9226, ¶ 70; 47 CFR 54.521(e)(2)(i).

[14] ''Causes for suspension and debarment are the conviction of or civil judgment for attempt or commission of criminal fraud, theft, embezzlement, forgery, bribery, falsification or destruction of records, making false statements, receiving stolen property, making false claims, obstruction of justice and other fraud or criminal offense arising out of activities associated with or related to the schools and libraries support mechanism.'' 47 CFR 54.521(c). Such activities ''include the receipt of funds or discounted services through the schools and libraries support mechanism, or consulting with, assisting, or advising applicants or service providers regarding schools and libraries support mechanism described in this section ([47 CFR 54.500 *et seq.*).'' 47 CFR 54.521(a)(1).

[15] See Second Report and Order, 18 FCC Rcd at 9226, ¶ 70; 47 CFR 54.521(e)(2)(i), 54.521(e)(3).

[16] Second Report and Order, 18 FCC Rcd at 9227, ¶ 74.

[17] See id., 18 FCC Rcd at 9226, ¶ 70; 47 CFR 54.521(e)(5).

[18] Id. The Commission may reverse a debarment, or may limit the scope or period of debarment upon a finding of extraordinary circumstances, following the filing of a petition by you or an interested party or upon motion by the Commission. 47 CFR 54.521(f).

[19] Second Report and Order, 18 FCC Rcd at 9225, ¶ 67; 47 CFR 54.521(d), 54.521(g).

[20] Id.

FEDERAL COMMUNICATIONS COMMISSION

Notice of Public Information Collection(s) Being Reviewed by the Federal Communications Commission for Extension Under Delegated Authority

June 30, 2005.

SUMMARY: The Federal Communications Commission, as part of its continuing effort to reduce paperwork burden invites the general public and other Federal agencies to take this opportunity to comment on the following information collection(s), as required by the Paperwork Reduction Act (PRA) of 1995, Public Law 104–13. An agency may not conduct or sponsor a collection of information unless it displays a currently valid control number. No person shall be subject to any penalty for failing to comply with a collection of information subject to the Paperwork Reduction Act (PRA) that does not display a valid control number. Comments are requested concerning (a) Whether the proposed collection of information is necessary for the proper performance of the functions of the Commission, including whether the information shall have practical utility; (b) the accuracy of the Commission's burden estimate; (c) ways to enhance the quality, utility and clarity of the information collected; and (d) ways to minimize the burden of the collection of information on the respondents, including the use of automated collection techniques or other forms of information technology.

DATES: Written Paperwork Reduction (PRA) comments should be submitted on or before September 12, 2005. If you anticipate that you will be submitting comments, but find it difficult to do so within the period of time allowed by this notice, you should advise the contact listed below as soon as possible.

ADDRESSES: Direct all Paperwork Reduction Act (PRA) comments to Cathy Williams, Federal Communications Commission, Room 1–C823, 445 12th Street, SW., Washington, DC 20554 or via the Internet to *Cathy.Williams@fcc.gov*.

FOR FURTHER INFORMATION CONTACT: For additional information or copies of the information collection(s), contact Cathy Williams at 202–418–2918 or via the Internet at *Cathy.Williams@fcc.gov*.

SUPPLEMENTARY INFORMATION: *OMB Control Number:* 3060–0309.

Title: Section 74.1281, Station Records.

Form Number: Not applicable.

Type of Review: Extension of a currently approved collection.

Respondents: Business or other for-profit entities; Not for profit institutions; State, local or tribal government.

Number of Respondents: 3,800.

Estimated Time per Response: 1 hour.

Frequency of Response: Recordkeeping requirement.

Total Annual Burden: 3,800 hours.

Total Annual Cost: None.

Privacy Act Impact Assessment: No impact(s).

Needs and Uses: Section 74.1281 requires licensees of FM translator stations to maintain adequate station records. These records include the current instrument of authorization, official correspondence with FCC, maintenance records, contracts, permission for rebroadcasts and other pertinent documents. They also include entries concerning any extinguishment or improper operation of tower lights. Data is used by FCC staff in investigations to assure that licensee is operating in accordance with FCC rules and regulations and its station authorization.

Federal Communications Commission.

Marlene H. Dortch,

Secretary.

[FR Doc. 05–13479 Filed 7–12–05; 8:45 am]

BILLING CODE 6712–01–P

FEDERAL COMMUNICATIONS COMMISSION

Notice of Public Information Collection(s) Being Submitted for Review to the Office of Management and Budget

June 17, 2005.

SUMMARY: The Federal Communications Commission, as part of its continuing

effort to reduce paperwork burden invites the general public and other Federal agencies to take this opportunity to comment on the following information collection(s), as required by the Paperwork Reduction Act (PRA) of 1995, Public Law 104–13. An agency may not conduct or sponsor a collection of information unless it displays a currently valid control number. No person shall be subject to any penalty for failing to comply with a collection of information subject to the Paperwork Reduction Act (PRA) that does not display a valid control number. Comments are requested concerning (a) Whether the proposed collection of information is necessary for the proper performance of the functions of the Commission, including whether the information shall have practical utility; (b) the accuracy of the Commission's burden estimate; (c) ways to enhance the quality, utility, and clarity of the information collected; and (d) ways to minimize the burden of the collection of information on the respondents, including the use of automated collection techniques or other forms of information technology.

DATES: Written Paperwork Reduction Act (PRA) comments should be submitted on or before August 12, 2005. If you anticipate that you will be submitting PRA comments, but find it difficult to do so within the period of time allowed by this notice, you should advise the contact listed below as soon as possible.

ADDRESSES: Direct all Paperwork Reduction Act (PRA) comments to Leslie F. Smith, Federal Communications Commission, Room 1–A804, 445 12th Street, SW., DC 20554 or via the Internet to *Leslie.Smith@fcc.gov*. If you would like to obtain or view a copy of this new or revised information collection, you may do so by visiting the FCC PRA Web page at: *http://www.fcc.gov/omd/pra.*

FOR FURTHER INFORMATION CONTACT: For additional information or copies of the information collection(s), contact Leslie F. Smith at (202) 418–0217 or via the Internet at *Leslie.Smith@fcc.gov.*

SUPPLEMENTARY INFORMATION:

OMB Control Number: 3060–0053.

Title: Application for Consent to Transfer Control of Corporation Holding Station License, FCC Form 703.

Form Number: FCC Form 703.

Type of Review: Revision of a currently approved collection.

Respondents: Business or other for-profits; not-for-profit institutions.

Number of Respondents: 40.

Estimated Time per Response: 36 minutes (0.6 hours).

Frequency of Response: On occasion reporting requirement; Third party disclosure requirement.

Total Annual Burden: 24 hours.

Total Annual Cost: $2,200.

Privacy Impact Assessment: No impact(s).

Needs and Uses: The Communications Act of 1934, as amended, and 47 CFR 5.59 of FCC Rules require applicants for Experimental Radio Services to submit FCC Form 703 when they propose to change the control of a station, via a transfer of stock ownership. The Commission uses information to determine the eligibility for licenses, without which, violations of ownership regulations may occur. There are no changes to the FCC Form 703, but the regulatory fee has increased to $55.00.

OMB Control Number: 3060–0068.

Title: Application for Consent to Assign an Experimental Authorization, FCC Form 702.

Form Number: FCC 702.

Type of Review: Revision of a currently approved collection.

Respondents: Business or other for-profit; not-for-profit institutions.

Number of Respondents: 10.

Estimated Time per Response: 0.6 hour. (36 mins.).

Frequency of Response: On occasion reporting requirements; Third party disclosure.

Total Annual Burden: 6 hours.

Total Annual Cost: $550.

Privacy Impact Assessment: No impact(s).

Needs and Uses: The FCC Rules, 47 CFR 5.59, require that applicants for Experimental Radio Service file FCC Form 702 when the legal right to control the use and operation of a station is to be transferred, as a result of a voluntary act (contract or other agreement); of an involuntary act (death or legal disability) of the grantee of a station authorization; by involuntary assignment of the physical property constituting the station under a court decree in bankruptcy proceedings or other court order; or by operation of law in any other manner. Applicants now file FCC Form 702 electronically. The regulatory fee has increased to $55.00

Federal Communications Commission.

Marlene H. Dortch,

Secretary.

[FR Doc. 05–13749 Filed 7–12–05; 8:45 am]

BILLING CODE 6712–01–P

FEDERAL COMMUNICATIONS COMMISSION

[CG Docket No. 03–123; DA 05–1681]

Consumer & Governmental Affairs Bureau Reminds States and Telecommunications Relay Services (TRS) Providers That the Annual Summary of Consumer Complaints Concerning Is Due Friday, July 1, 2005

AGENCY: Federal Communications Commission.

ACTION: Notice.

SUMMARY: In this document, the Commission notifies the public, state Telecommunications Relay Services (TRS) programs and interstate TRS providers that the annual consumer complaint log summaries are due on Friday, July 1, 2005. Complaint log summaries should include information pertaining to complaints received between June 1, 2004, and May 31, 2005. To assist the Commission in monitoring the service quality of TRS providers, the Commission requires state TRS programs and TRS providers that provide interstate TRS, interstate STS, interstate Spanish relay, interstate captioned telephone relay, VRS, and IP Relay to maintain and submit consumer complaints that allege violations of the federal TRS mandatory minimum standards. Complaint log summaries shall include, at a minimum, the number of complaints received that allege a violation of the federal TRS mandatory minimum standards, the date of the complaint, the nature of the complaint, the date of its resolution, and an explanation of the resolution.

DATES: State TRS programs and interstate TRS providers must file their annual consumer complaint log summary no later than July 1, 2005.

ADDRESSES: Federal Communications Commission, 445 12th Street, SW., Washington, DC 20554.

FOR FURTHER INFORMATION CONTACT: Dana Jackson, (202) 418–2247 (voice), (202) 418–7898 (TTY), or e-mail: *Dana.Jackson@fcc.gov*.

SUPPLEMENTARY INFORMATION: This is a summary of the Commission's *Public Notice*, DA 05–1681, released June 16, 2005. This document notifies state TRS programs and interstate TRS providers that the annual complaint log summary for complaints received between June 1, 2004, and May 31, 2005, is due on Friday, July 1, 2005. All filings must reference CG Docket 03–123. States and interstate TRS providers who choose to submit by paper must submit an original and four copies of each filing on or before Friday, July 1, 2005. To expedite

the processing of complaint log summaries, states and interstate TRS providers are encouraged to submit an additional copy to Attn: Dana Jackson, Federal Communications Commission, Consumer & Governmental Affairs Bureau, 445 12th Street, SW., Washington, DC 20554 or by e-mail at *Dana.Jackson@fcc.gov.* States and interstate TRS providers should also submit electronic disk copies of their complaint log summaries on a standard 3.5 inch diskette formatted in an IBM compatible format using Word 97 or compatible software. The diskette should be submitted in ''read-only'' mode and must be clearly labeled with the State or interstate TRS provider name, the filing date and captioned ''Complaint Log Summary.''

Filings can be sent by hand or messenger delivery, by electronic media, by commercial overnight courier, or by first-class or overnight U.S. Postal Service mail (although we continue to experience delays in receiving U.S. Postal Service mail). The Commission's contractor, Natek, Inc., will receive hand-delivered or messenger-delivered paper filings or electronic media for the Commission's Secretary at 236 Massachusetts Avenue, NE., Suite 110, Washington, DC 20002. The filing hours at this location are 8 a.m. to 7 p.m. All hand deliveries must be held together with rubber bands or fasteners. Any envelopes must be disposed of before entering the building. Commercial and electronic media sent by overnight mail (other than U.S. Postal Service Express Mail and Priority Mail) must be sent to 9300 East Hampton Drive, Capitol Heights, MD 20743.

U.S. Postal Service first-class mail, Express Mail, and Priority Mail should be addressed to 445 12th Street, SW., Washington, DC 20554. All filings must be addressed to the Commission's Secretary, Marlene H. Dortch, Office of the Secretary, Federal Communications Commission, 445 12th Street, SW., Room TW–B204, Washington, DC 20554.

The full text of this document and copies of any subsequently filed documents in this matter will be available for public inspection and copying during regular business hours at the FCC Reference Information Center, Portals II, 445 12th Street, SW., Room CY–A257, Washington, DC 20554. This document and copies of subsequently filed documents in this matters may also be purchased from the Commission's duplicating contract, BCPI, Inc., Portals II, 445 12th Street, SW., Room CY–B402, Washington, DC 20554. Customers may contact BCPI, Inc. at their Web site *www.bcpiweb.com* or call 1–800–378–3160.

To request materials in accessible formats for people with disabilities (Braille, large print, electronic files, audio format), send an e-mail to *fcc504@fcc.gov* or call the Consumer & Governmental Affairs Bureau at (202) 418–0530 (voice), (202) 418–0432 (TTY). This *Public Notice* can also be downloaded in Word or Portable Document Format (PDF) at: *http://www.fcc.gov/cgb/dro.*

Synopsis

State TRS programs should report all complaints made to the state agency, as well as those made to the state's TRS provider. TRS providers that provide interstate TRS, interstate STS, interstate Spanish relay, interstate captioned telephone relay, VRS, and IP Relay are required to submit complaint log summaries. These logs are intended to provide an early warning system to the Commission of possible service quality problems. Additionally, this information allows the Commission to determine whether a state or interstate TRS provider has appropriately addressed consumer complaints and to spot national trends that may lend themselves to coordinated solutions. This information further enables states to learn how other states are resolving complaints. We note that according to the data presented in the state complaint log summary submissions for 2004, approximately sixteen hundred complaints were reported that alleged a violation of one or more of the Commission's mandatory minimum standards for TRS. Over seventy-seven percent of all complaints alleged violations of the operational mandatory minimum standards and stemmed from the interaction between the calling party and the communications assistant (CA). We therefore remind TRS providers and state administrators that their CAs must, among other things, be knowledgeable of TRS procedures, follow customer's instructions, and continue to keep callers informed about the progress of their call.

Federal Communications Commission.

Jay Keithley,

Deputy Chief, Consumer & Governmental Affairs Bureau.

[FR Doc. 05–13573 Filed 7–12–05; 8:45 am]

BILLING CODE 6712–01–P

FEDERAL COMMUNICATIONS COMMISSION

[DA 05–1730]

Notice of Debarment

AGENCY: Federal Communications Commission.

ACTION: Notice.

SUMMARY: The Enforcement Bureau (''Bureau'') debars Mr. Haider Bokhari from the schools and libraries universal service support mechanism (or ''E-Rate program'') for a period of three years.

DATES: Debarment commences on the date Mr. Haider Bokhari receives the debarment letter or July 13, 2005, whichever date comes first, for a period of three years.

FOR FURTHER INFORMATION CONTACT: Diana Lee, Federal Communications Commission, Enforcement Bureau, Investigations and Hearings Division, Room 4–C330, 445 12th Street, SW., Washington, DC 20554. Diana Lee may be contacted by phone at (202) 418–0843 or e-mail at *diana.lee@fcc.gov.*

SUPPLEMENTARY INFORMATION: The Bureau has debarred Mr. Bokhari from the schools and libraries universal service support mechanism for a period of three years pursuant to 47 CFR part 521 and 47 CFR 0.111(a)(14). The Commission previously suspended Mr. Bokhari from the schools and libraries mechanism, pending debarment proceedings. See 70 FR 11972, March 10, 2005. Attached is the debarment letter, Notice of Debarment, DA 05–1730, which was mailed to Mr. Bokhari and released on June 23, 2005, that in turn attached the suspension letter, *Notice of Suspension and of Proposed Debarment,* DA 05–421. The complete text of the debarment letter, including attachment 1 the suspension letter, is available for public inspection and copying during regular business hours at the FCC Reference Information Center, Portal II, 445 12th Street, SW., Room CY–A257, Washington, DC 20554, In addition, the complete test is available on the FCC's Web site at *http://www.fcc.gov.* The text may also be purchased from the Commission's duplicating contractor, Best Copy and Printing, Inc., Portal II, 445 12th Street, SW., Room CY–B420, Washington, DC 20554, telephone (202) 488–5300 or (800) 378–3160, facsimile (202) 488–5563, or via e-mail *http://www.bcpiweb.com.*

Federal Communications Commission.

William H. Davenport,

Chief, Investigations and Hearings Division, Enforcement Bureau.

The notice of debarment and suspension letters follows:

June 23, 2005.

Via Certified Mail, Return Receipt Requested

Mr. Haider Bokhari (a/k/a Syed Haider Ali Bokhari), c/o Patrick C. Brennan, Esquire, Brennan & Ramirez LLP, 324 E Wisconsin Ave-Suite 1010, Milwaukee, WI 53202–4309

Re: Notice of Debarment, File No. EB–05–IH–0107

Dear Mr. Haider Bokhari: Pursuant to section 54.521 of the rules of the Federal Communications Commission (the ''Commission''), by this Notice of Debarment you are hereby debarred from the schools and libraries universal service support mechanism (or ''E-Rate program'') for a period of three years.[1]

On February 16, 2005, the Enforcement Bureau (the ''Bureau'') sent you a Notice of Suspension and Proposed Debarment (the ''Notice of Suspension'').[2] That Notice of Suspension was published in the **Federal Register** on March 10, 2005.[3] The Notice of Suspension suspended you from the schools and libraries universal service support mechanism and described the basis for your proposed debarment, the applicable debarment procedures, and the effect of debarment.[4]

Pursuant to the Commission's rules, any opposition to your suspension or its scope or to your proposed debarment or its scope had to be filed with the Commission no later than thirty (30) calendar days from the earlier date of your receipt of the Notice of Suspension or publication of the Notice of Suspension in the **Federal Register**.[5] The Commission did not receive any such opposition.

As discussed in the Notice of Suspension, on or about January 28, 2005, you were convicted of mail fraud and money laundering offenses involving your participation in the E-Rate program. In connection with the mail fraud, you admitted to conspiring and carrying out, with co-conspirators, the following acts: (1) Illegally inducing certain schools to select your consulting company as their E-Rate service provider by promising school officials that their schools would not have to pay the undiscounted share of their costs under the E-Rate program; (2) taking over those schools' role in completing and submitting E-Rate applications, and causing those schools to enter into unnecessary large contracts for infrastructure enhancements; (3) submitting materially false and fraudulent invoices and other documents to the program claiming that the schools have been billed for their undiscounted share and that E-Rate goods and services have been provided; and (4) receiving payment from the E-Rate program for goods and services not rendered.[6] In connection with the money laundering offense, you admitted to conspiring and carrying out, with co-conspirators, an unlawful scheme to transfer the fraudulently obtained E-Rate payments from the United States to Pakistan through the unknowing services of other individuals designed, in whole or in part, to conceal and disguise the nature, location, source, ownership, and control of these monies.[7] Such conduct constitutes the basis for your debarment, and your conviction falls within the categories of causes for debarment under section 54.521(c) of the Commission's rules.[8] For the foregoing reasons, you are hereby debarred for a period of three years from the debarment date, *i.e.*, the earlier date of your receipt of this Notice of Debarment or its publication date in the **Federal Register**.[9] Debarment excludes you, for the debarment period, from activities ''associated with or related to the schools and libraries support mechanism,'' including ''the receipt of funds or discounted services through the schools and libraries support mechanism, or consulting with, assisting, or advising applicants or service providers regarding the schools and libraries support mechanism.''[10]

Sincerely,

William H. Davenport;

Chief, Investigations and Hearings Division, Enforcement Bureau.

cc: Carla Stern, Esq., Assistant United States Attorney, U.S. Department of Justice (E-mail), Kristy Carroll, Esq., USAC (E-mail)

February 16, 2005.

Via Certified Mail, Return Receipt Requested

Mr. Haider Bokhari, (a/k/a Syed Haider Ali Bokhari), c/o Patrick C. Brennan, Esquire, Brennan & Ramirez LLP, 324 E Wisconsin Ave-Suite 1010, Milwaukee, WI 53202–4309

Re: Notice of Suspension and of Proposed Debarment, File No. EB–05–IH–0107

Dear Mr. Haider Bokhari: The Federal Communications Commission (''FCC'' or ''Commission'') has received notice of your January 28, 2005 conviction for mail fraud in violation of 18 U.S.C. 371 and 1341, and for money laundering in violation of the 18 U.S.C. 1956(a) and (h).[1] Consequently, pursuant to 47 CFR 54.521, this letter constitutes official notice of your suspension from the schools and libraries universal service support mechanism (''E-Rate program''). In addition, the Enforcement Bureau (''Bureau'') hereby notifies you that we are commencing debarment proceedings against you.[2]

I. Notice of Suspension

Pursuant to section 54.521(a)(4) of the Commission's rules,[3] Your conviction requires the Bureau to suspend you from participating in any activities associated with or related to the schools and libraries fund mechanism, including the receipt of funds or discounted services through the schools and libraries fund mechanism, or consulting with, assisting, or advising applicants or service providers regarding the schools and libraries support mechanism.[4] Your suspension becomes effective upon the earlier of your receipt of this letter or publication of notice in the **Federal Register**.[5]

Suspension is immediate pending the Bureau's final debarment determination. You may contest this suspension or the scope of this suspension by filing arguments in opposition to the suspension, with any relevant documentation. Your request must be received within 30 days after it receives this letter or after notice is published in the **Federal Register**, whichever comes first.[6] Such requests, however, will not ordinarily be granted.[7] The Bureau may reverse or limit the scope of suspension only upon a finding of extraordinary circumstances.[8] Absent extraordinary circumstances, the Bureau will decide any request for reversal or modification of suspension within 90 days of its receipt of such request.[9]

II. Notice of Proposed Debarment

A. Reasons for and Cause of Debarment

The Commission has established procedures to prevent persons who have ''defrauded the government or engaged in similar acts through activities associated with or related to the schools and libraries support mechanism'' from receiving the benefits associated with that program.[10] Based on

[1] *See* 47 CFR 0.111(a)(14), 54.521.

[2] Letter from William H. Davenport, Chief, Investigations and Hearings Division, Enforcement Bureau, Federal Communications Commission, to Haider Bokhari, Notice of Suspension and Proposed Debarment, 20 FCC Rcd 3599 (Inv. & Hearings Div., Enf. Bur. 2005) (Attachment 1).

[3] 70 FR 11972 (Mar. 10, 2005).

[4] *See id.*, 20 FCC Rcd at 3599–3602.

[5] *See* 47 CFR 54.521(e)(3) and (4). That date occurred no later than April 9, 2005. *See* supra note 3.

[6] *See* Notice of Suspension, 20 FCC Rcd at 3600–01.

[7] *Id.* at 3601.

[8] *Id.* at 3601; 47 CFR 54.521(c).

[9] Notice of Suspension, 20 FCC Rcd at 3601.

[10] *See* 47 CFR 54.521(a)(1), 54.521(a)(5), 54.521(d); Notice of Suspension, 20 FCC Rcd at 3602.

[1] *United States* v. *Bokhari et al*, Case No. 04–CR–0056–RTR, Superceding Indictment (E.D.WI filed September 24, 2004 and entered October 4, 2004) (''Bokhari Superceding Indictment''); *United States* v. *Haider Bokhari*, Case No. 04–CR–0056–RTR, Judgment (E.D.WI filed January 28, 2005 and entered February 3, 2005).

[2] 47 CFR 54.521; 47 CFR 0.111(a)(14) (delegating to the Enforcement Bureau authority to resolve universal service suspension and debarment proceedings pursuant to 47 CFR 54.521).

[3] 47 CFR 54.521(a)(4). *See* Schools and Libraries Universal Service Support Mechanism, Second Report and Order and Further Notice of Proposed Rulemaking, 18 FCC Rcd 9202, 9225–9227, ¶¶ 67–74 (2003) (''Second Report and Order'').

[4] Second Report and Order, 18 FCC Rcd at 9225, ¶ 67; 47 U.S.C. 254; 47 CFR 54.502–54.503; 47 CFR 54.521(a)(4).

[5] Second Report and Order, 18 FCC Rcd at 9226, ¶ 69; 47 CFR 54.521(e)(1).

[6] Second Report and Order, 18 FCC Rcd at 9226, ¶ 70; 47 CFR 54.521(e)(4).

[7] Second Report and Order, 18 FCC Rcd at 9226, ¶ 70.

[8] 47 CFR 54.521(e)(5).

[9] *See* Second Report and Order, 18 FCC Rcd at 9226, ¶ 70; 47 CFR 54.521(e)(5), 54.521(f).

[10] Second Report and Order, 18 FCC Rcd at 9225, ¶ 66. The Commission's debarment rules define a

Continued

your October 22, 2004 guilty plea, you were convicted, on or about January 28, 2005, of mail fraud and money laundering offenses involving your participation, through a Virginia-based consulting company owned by your brother, Qasim Bokhari, in the E-Rate program with certain schools in Wisconsin and Illinois.[11] In connection with the mail fraud offenses, you admitted to conspiring and carrying out, along with Qasim Bokhari and other co-conspirators, the following acts: (1) Illegally inducing certain Wisconsin and Illinois schools to select the consulting company as the schools' E-Rate service provider by promising school officials that their school would not have to pay their undiscounted share of the cost under the E-Rate program; (2) taking over the schools' role in completing and submitting E-Rate applications, and causing those schools to enter into unnecessarily large contracts for infrastructure enhancements under the E-Rate program; (3) submitting materially false and fraudulent invoices and other documents to the E-Rate program claiming that the schools have been billed for their undiscounted share; (4) submitting materially false and fraudulent invoices and other documents to the E-Rate program claiming that certain work had been performed and goods supplied to the schools; and (5) receiving payment from the E-Rate program for goods and services that you fraudulently claimed the consulting company had provided to the schools. In connection with the money laundering offenses, you admitted to conspiring and carrying out, with Qasim Bokhari and other co-conspirators, the unlawful scheme to transfer the fraudulently obtained E-Rate payments from the United States to Pakistan through the unknowing services of other individuals designed, in whole or in part, to conceal and disguise the nature, location, source, ownership, and control of these monies.[12] These actions constitute the conduct or transactions upon which this debarment proceeding is based.[13] Moreover, your conviction on the basis of these acts falls within the categories of causes for debarment defined in section 54.521(c) of the Commission's rules.[14] Therefore, pursuant to section 54.521(a)(4) of the Commission's rules, your conviction requires the Bureau to commence debarment proceedings against you.

B. Debarment Procedures

You may contest debarment or the scope of the proposed debarment by filing arguments and any relevant documentation within 30 calendar days of the earlier of the receipt of this letter or of publication in the **Federal Register**.[15] Absent extraordinary circumstances, the Bureau will debar you.[16] Within 90 days of receipt of any opposition to your suspension and proposed debarment, the Bureau, in the absence of extraordinary circumstances, will provide you with notice of its decision to debar.[17] If the Bureau decides to debar you, its decision will become effective upon the earlier of your receipt of a debarment notice or publication of the decision in the **Federal Register**.[18]

C. Effect of Debarment

If and when your debarment becomes effective, you will be prohibited from participating in activities associated with or related to the schools and libraries support mechanism for at least three years from the date of debarment.[19] The Bureau may, if necessary to protect the public interest, extend the debarment period.[20]

Please direct any responses to the following address: Diana Lee, Federal Communications Commission, Enforcement Bureau, Investigations and Hearings Division, Room 4-C443, 445 12th Street, SW., Washington, DC 20554.

If you submit your response via hand-delivery or non-United States Postal Service delivery (*e.g.*, Federal Express, DHL, etc.), please send the response to Ms. Lee at the following address: Federal Communications Commission, 9300 East Hampton Drive, Capitol Heights, MD 20743.

If you have any questions, please contact Ms. Lee via mail, by telephone at (202) 418–0843 or by e-mail at *diana.lee@fcc.gov.*

Sincerely yours,

William H. Davenport,
Chief, Investigations and Hearings Division, Enforcement Bureau.

cc: Carla Stern, Assistant United States Attorney, DOJ (E-mail) Kristy Carroll, Esq., USAC (E-mail).

[FR Doc. 05–13750 Filed 7–12–05; 8:45 am]

BILLING CODE 6712–01–P

''person'' as ''[a]ny individual, group of individuals, corporation, partnership, association, unit of government or legal entity, however, organized.'' 47 CFR 54.521(a)(6).

[11] *See* Bokhari Superceding Indictment at 5–13.

[12] *See* Bokhari Superceding Indictment at 16–19, 21.

[13] Second Report and Order, 18 FCC Rcd at 9226, ¶ 70; 47 CFR 54.521(e)(2)(i).

[14] ''Causes for suspension and debarment are the conviction of or civil judgment for attempt or commission of criminal fraud, theft, embezzlement, forgery, bribery, falsification or destruction of records, making false statements, receiving stolen property, making false claims, obstruction of justice and other fraud or criminal offense arising out of activities associated with or related to the schools and libraries support mechanism.'' 47 CFR 54.521(c). Such activities ''include the receipt of funds or discounted services through the schools and libraries support mechanism, or consulting with, assisting, or advising applicants or service providers regarding schools and libraries support mechanism described in this section ([47 CFR] 54.500 *et seq.*).'' 47 CFR 54.521(a)(1).

[15] *See* Second Report and Order, 18 FCC Rcd at 9226, ¶ 70; 47 CFR 54.521(e)(2)(i), 54.521(e)(3).

[16] Second Report and Order, 18 FCC Rcd at 9227, ¶ 74.

[17] *See id.*, 18 FCC Rcd at 9226, ¶ 70; 47 CFR 54.521(e)(5).

[18] *Id.* The Commission may reverse a debarment, or may limit the scope or period of debarment upon a finding of extraordinary circumstances, following the filing of a petition by you or an interested party or upon motion by the Commission. 47 CFR 54.521(f).

[19] Second Report and Order, 18 FCC Rcd at 9225, ¶ 67; 47 CFR 54.521(d), 54.521(g).

[20] *Id.*

FEDERAL COMMUNICATIONS COMMISSION

[DA 05–1728]

Notice of Debarment

AGENCY: Federal Communications Commission.

ACTION: Notice.

SUMMARY: The Enforcement Bureau (''Bureau'') debars Mr. Qasim Bokhari (a/k/a Syed Qasim Ali Bokhari, a/k/a Kasim Bokhari from the schools and libraries universal service support mechanism (or ''E-Rate program'') for a period of three years.

DATES: Debarment commences on the date Mr. Bokhari receives the debarment letter or July 13, 2005, whichever date come first, for a period of three years.

FOR FURTHER INFORMATION CONTACT: Diana Lee, Federal Communications Commission, Enforcement Bureau, Investigations and Hearings Division, Room 4–C330, 445 12th Street, SW., Washington, DC 20554. Diana Lee may be contacted by phone at (202) 418–0843 or e-mail at *diana.lee@fcc.gov.*

SUPPLEMENTARY INFORMATION: The Bureau has debarred Mr. Bokhari from the schools and libraries universal service support mechanism for a period of three year pursuant to 47 CFR parts 521 and 47 CFR 0.111(a)(14). The Commission previously suspended Mr. Bokhari from the schools and libraries mechanism, pending debarment proceedings. *See* 70 FR 9647, February 28, 2005. Attached is the debarment letter, Notice of Debarment, DA 05–1728, which was mailed to Mr. Bokhari and released on June 23, 2005, that in tern attached the suspension letter, Notice of Suspension and of Proposed Debarment, DA 05–422. The complete text of the debarment letter, including attachment 1 the suspension letter, is available for public inspection and copying during regular business hours at the FCC Reference Information Center, Portal II, 445 12th Street, SW., Room CY–A257, Washington, DC 20554, In addition, the complete test is available on the FCC's Web site at *http://www.fcc.gov.* The text may also be purchased from the Commission's duplicating contractor, Best Copy and Printing, Inc., Portal II, 445 12th Street, SW., Room CY–B420, Washington, DC 20554, telephone (202) 488–5300 or (800) 378–3160, facsimile (202) 488–5563, or via e-mail *http://www.bcpiweb.com.*

Federal Communications Commission.

William H. Davenport,

Chief, Investigations and Hearings Division, Enforcement Bureau.

The notice of debarment and suspension letters follows:

June 23, 2005

Via Certified Mail, Return Receipt Requested

Mr. Qasim Bokhari (a/k/a Syed Qasim Ali Bokhari, a/k/a Kasim Bokhari), c/o Michael J. Steinle, Esquire, Steinle Law Offices, 2600 N Mayfair Rd–Suite 700, Milwaukee, WI 53226

Re: Notice of Debarment, File No. EB–04–IH–0388

Dear Mr. Qasim Bokhari: Pursuant to section 54.521 of the rules of the Federal Communications Commission (the ''Commission''), by this Notice of Debarment you are hereby debarred from the schools and libraries universal service support mechanism (or ''E-Rate program'') for a period of three years.[1]

On February 16, 2005, the Enforcement Bureau (the ''Bureau'') sent you a Notice of Suspension and Proposed Debarment (the ''Notice of Suspension'').[2] That Notice of Suspension was published in the **Federal Register** on February 28, 2005.[3] The Notice of Suspension suspended you from the schools and libraries universal service support mechanism and described the basis for your proposed debarment, the applicable debarment procedures, and the effect of debarment.[4]

Pursuant to the Commission's rules, any opposition to your suspension or its scope or to your proposed debarment or its scope had to be filed with the Commission no later than thirty (30) calendar days from the earlier date of your receipt of the Notice of Suspension or publication of the Notice of Suspension in the **Federal Register**.[5] The Commission did not receive any such opposition.

As discussed in the Notice of Suspension, on or about January 28, 2005, you were convicted of mail fraud and money laundering offenses involving your participation in the E-Rate program. In connection with the mail fraud, you admitted to conspiring and carrying out, with co-conspirators, the following acts: (1) Illegally inducing certain schools to select your consulting company as their E-Rate service provider by promising school officials that their schools would not have to pay the undiscounted share of their costs under the E-Rate program; (2) taking over those schools' role in completing and submitting E-Rate applications, and causing those schools to enter into unnecessary large contracts for infrastructure enhancements; (3) submitting materially false and fraudulent invoices and other documents to the program claiming that the schools have been billed for their undiscounted share and that E-Rate goods and services have been provided; and (4) receiving payment from the E-Rate program for goods and services not rendered.[6] In connection with the money laundering offense, you admitted to conspiring and carrying out, with co-conspirators, an unlawful scheme to transfer the fraudulently obtained E-Rate payments from the United States to Pakistan through the unknowing services of other individuals designed, in whole or in part, to conceal and disguise the nature, location, source, ownership, and control of these monies.[7] Such conduct constitutes the basis for your debarment, and your conviction falls within the categories of causes for debarment under § 54.521(c) of the Commission's rules.[8] For the foregoing reasons, you are hereby debarred for a period of three years from the debarment date, *i.e.*, the earlier date of your receipt of this Notice of Debarment or its publication date in the **Federal Register**.[9] Debarment excludes you, for the debarment period, from activities ''associated with or related to the schools and libraries support mechanism,'' including ''the receipt of funds or discounted services through the schools and libraries support mechanism, or consulting with, assisting, or advising applicants or service providers regarding the schools and libraries support mechanism.'' [10]

Sincerely,

William H. Davenport,

Chief; Investigations and Hearings Division, Enforcement Bureau.

cc: Carla Stern, Esq., Assistant United States Attorney, U.S. Department of Justice (E-mail) Kristy Carroll, Esq., USAC (E-mail).

February 16, 2005

Via Certified Mail, Return Receipt Requested

Mr. Qasim Bokhari, (a/k/a Syed Qasim Ali Bokhari, a/k/a Kasim Bokhari), c/o Michael J. Steinle, Esquire, Steinle Law Offices, 2600 N Mayfair Rd—Suite 700, Milwaukee, WI 53226

Re: Notice of Suspension and of Proposed Debarment, File No. EB–04–IH–0388

Dear Mr. Qasim Bokhari: The Federal Communications Commission (''FCC'' or ''Commission'') has received notice of your January 28, 2005 conviction for mail fraud in violation of 18 U.S.C. 371 and 1341, and for money laundering in violation of the 18 U.S.C. 1956(a) and (h).[1] Consequently, pursuant to 47 CFR 54.521, this letter constitutes official notice of your suspension from the schools and libraries universal service support mechanism (''E-Rate program''). In addition, the Enforcement Bureau (''Bureau'') hereby notifies you that we are commencing debarment proceedings against you.[2]

I. Notice of Suspension

Pursuant to § 54.521(a)(4) of the Commission's rules,[3] Your conviction requires the Bureau to suspend you from participating in any activities associated with or related to the schools and libraries fund mechanism, including the receipt of funds or discounted services through the schools and libraries fund mechanism, or consulting with, assisting, or advising applicants or service providers regarding the schools and libraries support mechanism.[4] Your suspension becomes effective upon the earlier of your receipt of this letter or publication of notice in the **Federal Register**.[5]

Suspension is immediate pending the Bureau's final debarment determination. You may contest this suspension or the scope of this suspension by filing arguments in opposition to the suspension, with any relevant documentation. Your request must be received within 30 days after it receives this letter or after notice is published in the **Federal Register**, whichever comes first.[6] Such requests, however, will not ordinarily be granted.[7] The Bureau may reverse or limit the scope of suspension only upon a finding of extraordinary circumstances.[8] Absent extraordinary circumstances, the Bureau will decide any request for reversal or modification of suspension within 90 days of its receipt of such request.[9]

II. Notice of Proposed Debarment

A. Reasons for and Cause of Debarment

The Commission has established procedures to prevent persons who have ''defrauded the government or engaged in similar acts through activities associated with or related to the schools and libraries support mechanism'' from receiving the benefits associated with that program.[10] As provided

[1] *See* 47 CFR 0.111(a)(14), 54.521.

[2] Letter from William H. Davenport, Chief, Investigations and Hearings Division, Enforcement Bureau, Federal Communications Commission, to Qasim Bokhari, Notice of Suspension and Proposed Debarment, 20 FCC Rcd 3603 (Inv. & Hearings Div., Enf. Bur. 2005) (Attachment 1).

[3] 70 FR 9647 (Feb. 28, 2005).

[4] *See id.*, 20 FCC Rcd at 3603–06.

[5] *See* 47 CFR 54.521(e)(3) and (4). That date occurred no later than March 30, 2005. *See supra* note 3.

[6] *See* Notice of Suspension, 20 FCC Rcd at 3604–05.

[7] *Id.* at 3605.

[8] *Id.* at 3605; 47 CFR 54.521(c).

[9] *See* Notice of Suspension, 20 FCC Rcd at 3605.

[10] See 47 CFR 54.521(a)(1), 54.521(a)(5), 54.521(d); Notice of Suspension, 20 FCC Rcd at 3606.

[1] *United States* v. *Bokhari et al,* Case No. 04–CR–0056–RTR, Plea Agreement (E.D.WI filed and entered October 22, 2004) (''Qasim Bokhari Plea Agreement''); *United States* v. *Qasim Bokhari*, Case No. 04–CR–0056–RTR, Judgment (E.D.WI filed January 28, 2005 and entered February 3, 2005).

[2] 47 CFR 54.521; 47 CFR 0.111(a)(14) (delegating to the Enforcement Bureau authority to resolve universal service suspension and debarment proceedings pursuant to 47 CFR 54.521).

[3] 47 CFR 54.521(a)(4). *See Schools and Libraries Universal Service Support Mechanism*, Second Report and Order and Further Notice of Proposed Rulemaking, 18 FCC Rcd 9202, 9225–9227, ¶¶ 67–74 (2003) (''Second Report and Order'').

[4] *Second Report and Order*, 18 FCC Rcd at 9225, ¶ 67; 47 U.S.C. 254; 47 CFR 54.502–54.503; 47 CFR 54.521(a)(4).

[5] *Second Report and Order*, 18 FCC Rcd at 9226, ¶ 69; 47 CFR 54.521(e)(1).

[6] *Second Report and Order*, 18 FCC Rcd at 9226, ¶ 70; 47 CFR 54.521(e)(4).

[7] *Second Report and Order*, 18 FCC Rcd at 9226, ¶ 70.

[8] 47 CFR 54.521(e)(5).

[9] *See Second Report and Order*, 18 FCC Rcd at 9226, ¶ 70; 47 CFR 54.521(e)(5), 54.521(f).

[10] *Second Report and Order*, 18 FCC Rcd at 9225, ¶ 66. The Commission's debarment rules define a ''person'' as ''[a]ny individual, group of individuals, corporation, partnership, association, unit of

Continued

by the October 22, 2004 plea agreement upon which your conviction is based, you pled guilty to mail fraud and money laundering offenses for activities in connection with your participation, through your Virginia-based consulting company, in the E-Rate program with certain schools in Wisconsin and Illinois. In connection with the mail fraud offenses, you admitted to conspiring and carrying out, with other co-conspirators, the following acts: (1) Illegally inducing certain Wisconsin and Illinois schools to select your consulting company as the schools' E-Rate service provider by promising school officials that their school would not have to pay their undiscounted share of the cost under the E-Rate program; (2) taking over those schools' role in completing and submitting E-Rate applications, and causing those schools to enter into unnecessarily large contracts for infrastructure enhancements under the E-Rate program; (3) submitting materially false and fraudulent invoices and other documents to the E-Rate program claiming that the schools have been billed for their undiscounted share; (4) submitting materially false and fraudulent invoices and other documents to the E-Rate program claiming that certain work had been performed and goods supplied to the schools; and (5) receiving payment from the E-Rate program for goods and services that you fraudulently claimed your consulting company had provided to the schools.[11] In connection with the money laundering offenses, you admitted to conspiring and carrying out, with other co-conspirators, an unlawful scheme to transfer the fraudulently obtained E-Rate payments from the United States to Pakistan through the unknowing services of other individuals designed, in whole or in part, to conceal and disguise the nature, location, source, ownership, and control of these monies.[12] These actions constitute the conduct or transactions upon which this debarment proceeding is based.[13] Moreover, your conviction on the basis of these acts falls within the categories of causes for debarment defined in § 54.521(c) of the Commission's rules.[14] Therefore, pursuant to § 54.521(a)(4) of the Commission's rules, your conviction requires the Bureau to commence debarment proceedings against you.

B. Debarment Procedures

You may contest debarment or the scope of the proposed debarment by filing arguments and any relevant documentation within 30 calendar days of the earlier of the receipt of this letter or of publication in the **Federal Register**.[15] Absent extraordinary circumstances, the Bureau will debar you.[16] Within 90 days of receipt of any opposition to your suspension and proposed debarment, the Bureau, in the absence of extraordinary circumstances, will provide you with notice of its decision to debar.[17] If the Bureau decides to debar you, its decision will become effective upon the earlier of your receipt of a debarment notice or publication of the decision in the **Federal Register**.[18]

C. Effect of Debarment

If and when your debarment becomes effective, you will be prohibited from participating in activities associated with or related to the schools and libraries support mechanism for at least three years from the date of debarment.[19] The Bureau may, if necessary to protect the public interest, extend the debarment period.[20]

Please direct any responses to the following address: Diana Lee, Federal Communications Commission, Enforcement Bureau, Investigations and Hearings Division, Room 4–C443, 445 12th Street, SW., Washington, DC 20554.

If you submit your response via hand-delivery or non-United States Postal Service delivery (*e.g.*, Federal Express, DHL, etc.), please send the response to Ms. Lee at the following address: Federal Communications Commission, 9300 East Hampton Drive, Capitol Heights, MD 20743.

If you have any questions, please contact Ms. Lee via mail, by telephone at (202) 418–0843 or by e-mail at *diana.lee@fcc.gov*.

Sincerely yours,

William H. Davenport,

Chief, Investigations and Hearings Division, Enforcement Bureau.

cc: Carla Stern, Assistant United States Attorney, DOJ (E-mail)

Kristy Carroll, Esq., USAC (E-mail)

[FR Doc. 05–13745 Filed 7–12–05; 8:45 am]

BILLING CODE 6712–01–P

government or legal entity, however, organized.'' 47 CFR 54.521(a)(6).

[11] *See* Qasim Bokhari Plea Agreement at 1–5.

[12] *See* Qasim Bokhari Plea Agreement at 1, 6–9.

[13] *Second Report and Order,* 18 FCC Rcd at 9226, ¶ 70; 47 CFR 54.521(e)(2)(i).

[14] ''Causes for suspension and debarment are the conviction of or civil judgment for attempt or commission of criminal fraud, theft, embezzlement, forgery, bribery, falsification or destruction of records, making false statements, receiving stolen property, making false claims, obstruction of justice and other fraud or criminal offense arising out of activities associated with or related to the schools and libraries support mechanism.'' 47 CFR 54.521(c). Such activities ''include the receipt of funds or discounted services through the schools and libraries support mechanism, or consulting with, assisting, or advising applicants or service providers regarding schools and libraries support mechanism described in this section ([47 CFR] § 54.500 *et seq.*).'' 47 CFR 54.521(a)(1).

[15] *See Second Report and Order*, 18 FCC Rcd at 9226, ¶ 70; 47 CFR 54.521(e)(2(i), 54.521(e)(3).

[16] *Second Report and Order*, 18 FCC Rcd at 9227, ¶ 74.

[17] *See id.*, 18 FCC Rcd at 9226, ¶ 70; 47 CFR 54.521(e)(5).

[18] *Id.* The Commission may reverse a debarment, or may limit the scope or period of debarment upon a finding of extraordinary circumstances, following the filing of a petition by you or an interested party or upon motion by the Commission. 47 CFR 54.521(f).

[19] *Second Report and Order*, 18 FCC Rcd at 9225, ¶ 67; 47 CFR 54.521(d), 54.521(g).

[20] *Id.*

FEDERAL COMMUNICATIONS COMMISSION

[DA 05–1729]

Notice of Suspension and of Proposed Debarment

AGENCY: Federal Communications Commission.

ACTION: Notice.

SUMMARY: The Enforcement Bureau (Bureau) gives notice of Mr. Ronald R. Morrett, Jr. suspension from the schools and libraries universal service support mechanism. In addition, the Bureau gives notice that debarment proceedings are commencing against Mr. Ronald R. Morrett, Jr.

DATES: Opposition request must be received by August 12, 2005. An opposition request by the party to be suspended must be received 30 days from the receipt of the suspension letter or by August 12, 2005. The Bureau will decide any opposition request for reversal or modification of suspension within 90 days of its receipt of such requests.

FOR FURTHER INFORMATION CONTACT: Diana Lee, Federal Communications Commission, Enforcement Bureau, Investigations and Hearings Division, Room 4-C330, 445 12th Street, SW., Washington, DC 20554. Diana Lee may be contacted by phone at (202) 418–0843 or e-mail at *diana.lee@fcc.gov.*

SUPPLEMENTARY INFORMATION: The Bureau has suspension and debarment authority under 47 CFR 521 and 47 CFR 0.111(a) (14). Suspension will help ensure that the party to be suspended cannot continue to benefit from the schools and libraries mechanism pending resolution of the debarment process. Attached is the suspension letter, Notice of Suspension and of Proposed Debarment, DA 05–1729, which was sent by certified mail to Mr. Ronald R. Morrett, Jr. and released on June 23, 2005. The letter (1) Gives notice of the suspension; (2) gives notice of proposed debarment; (3) gives the reasons for and cause of debarment; (4) explains the debarment procedures; and (5) describes the potential the effect of the debarment. The complete text of the suspension letter is available for public inspection and copying during regular business hours at the FCC Reference Information Center, Portal II, 445 12th Street, SW., Room CY–A257, Washington, DC 20554, In addition, the complete text is available on the FCC's Web site at *http://www.fcc.gov*. The text may also be purchased from the Commission's duplicating contractor, Best Copy and Printing, Inc., Portal II,

445 12th Street, SW., Room CY–B420, Washington, DC 20554, telephone (202) 488–5300 or (800) 378–3160, facsimile (202) 488–5563, or via e-mail *http://www.bcpiweb.com.*

Federal Communications Commission.

William H. Davenport,

Chief, Investigations and Hearings Division, Enforcement Bureau.

The suspension letter follows:

June 23, 2005

Via certified mail, return receipt requested

Mr. Ronald R. Morrett, Jr., 1809 Holly Drive, Harrisburg, PA 17110.

Re: Notice of Suspension and of Proposed Debarment File No. EB–03–IH–0615

Dear Mr. Morrett: The Federal Communications Commission (''FCC'' or ''Commission'') has received notice of your May 16, 2005 conviction for conspiracy to engage in bribery in a federally funded program, in violation of 18 U.S.C. 371.[1] Consequently, pursuant to 47 CFR 54.521, this letter constitutes official notice of your suspension from the schools and libraries universal service support mechanism (or ''E-Rate program''). In addition, the Enforcement Bureau (''Bureau'') hereby notifies you that we are commencing debarment proceedings against you.[2]

I. Notice of Suspension

Pursuant to section 54.521(a)(4) of the Commission's rules,[3] your conviction requires the Bureau to suspend you from participating in any activities associated with or related to the schools and libraries support mechanism, including the receipt of funds or discounted services through the schools and libraries support mechanism, or consulting with, assisting, or advising applicants or service providers regarding the schools and libraries support mechanism.[4] Your suspension becomes effective upon the earlier of your receipt of this letter or publication of notice in the **Federal Register**.[5]

Suspension is immediate pending the Bureau's final debarment determination. You may contest this suspension or the scope of this suspension by filing arguments in opposition to the suspension, with any relevant documentation. Your request must be received within 30 days after you receive this letter or after notice is published in the **Federal Register**, whichever comes first.[6] Such requests, however, will not ordinarily be granted.[7] The Bureau may reverse or limit the scope of suspension only upon a finding of extraordinary circumstances.[8] Absent extraordinary circumstances, the Bureau will decide any request for reversal or modification of suspension within 90 days of its receipt of such request.[9]

II. Notice of Proposed Debarment

A. Reasons for and Cause of Debarment

The Commission has established procedures to prevent persons who have ''defrauded the government or engaged in similar acts through activities associated with or related to the schools and libraries support mechanism'' from receiving the benefits associated with that program.[10] As provided by your December 8, 2003 plea agreement upon which your conviction is based, you pleaded guilty to a felony information charging you with conspiracy in violation of 18 U.S.C. 371.[11] The felony information alleges that in 2000, the Harrisburg (Pennsylvania) School District awarded a multi-million dollar E-Rate contract to you and EMO Communications, Inc. (''EMO'') for the development and installation of an educational technology system for the school district; that a grant from the E-Rate program funded a substantial portion of the cost of this contract; that you and EMO received payments from the E-Rate program only after John Weaver, Information Technology Director for the school district, certified that you and EMO had performed specified work under the contract; and that you agreed to make kickback payments of more than $1.9 million to Weaver while he processed certifications that were essential to you in obtaining E-Rate funded payments on the contract.[12] The felony information charges you, Weaver, and others with conspiring to corruptly give, offer, and agree to give things of value with the intent to influence an agent of the Harrisburg School District and in furtherance of that conspiracy, causing more than $1.9 million in payments to be made to Weaver.[13] Pursuant to your plea agreement, you have pleaded guilty to the charge of conspiracy set forth in the felony information. These actions constitute the conduct or transactions upon which this debarment proceeding is based.[14] Moreover, your conviction on the basis of these acts falls within the categories of causes for debarment defined in section 54.521(c) of the Commission's rules.[15] Therefore, pursuant to section 54.521(a)(4) of the Commission's rules, your conviction requires the Bureau to commence debarment proceedings against you.

B. Debarment Procedures

You may contest debarment or the scope of the proposed debarment by filing arguments and any relevant documentation within 30 calendar days of the earlier of the receipt of this letter or of publication in the **Federal Register**.[16] Absent extraordinary circumstances, the Bureau will debar you.[17] Within 90 days of receipt of any opposition to your suspension and proposed debarment, the Bureau, in the absence of extraordinary circumstances, will provide you with notice of its decision to debar.[18] If the Bureau decides to debar you, its decision will become effective upon the earlier of your receipt of a debarment notice or publication of the decision in the **Federal Register**.[19]

C. Effect of Debarment

If and when your debarment becomes effective, you will be prohibited from participating in activities associated with or related to the schools and libraries support mechanism for at least three years from the date of debarment.[20] The Bureau may, if necessary to protect the public interest, extend the debarment period.[21]

Please direct any responses to the following address: Diana Lee, Federal Communications Commission, Enforcement Bureau, Investigations and Hearings Division, Room 4C–330, 445 12th Street, SW., Washington, DC 20554.

If you submit your response via hand-delivery or non-United States Postal Service delivery (*e.g.*, Federal Express, DHL, etc.), please send the response to Ms. Lee at the following address: Federal Communications

[1] Any further reference in this letter to ''your conviction'' refers to your December 8, 2003 guilty plea for conspiracy and conviction therefor. *See United States* v. *Morrett,* Criminal Docket No. 03–337, Information at 4 (M.D.Pa. filed December 8, 2003) (''Morrett Information''); *United States* v. *Morrett,* Criminal Docket No. 03–337, Plea Agreement at 1–2 (M.D.Pa. filed Dec. 8, 2003) (''Morrett Plea Agreement''); *United States* v. *Morrett,* Criminal Docket No. 03–337, Judgment (M.D.Pa. filed May 16, 2005 and entered May 18, 2005).

[2] 47 CFR 54.521; 47 CFR 0.111(a)(14) (delegating to the Enforcement Bureau authority to resolve universal service suspension and debarment proceedings pursuant to 47 CFR 54.521).

[3] 47 CFR 54.521(a)(4). See Schools and Libraries Universal Service Support Mechanism, Second Report and Order and Further Notice of Proposed Rulemaking, 18 FCC Rcd 9202, 9225–9227, ¶¶ 67–74 (2003) (''Second Report and Order'').

[4] Second Report and Order, 18 FCC Rcd at 9225, ¶ 67; 47 U.S.C. 254; 47 CFR 54.502–54.503; 47 CFR 54.521(a)(4).

[5] Second Report and Order, 18 FCC Rcd at 9226, ¶ 69; 47 CFR 54.521(e)(1).

[6] Second Report and Order, 18 FCC Rcd at 9226, ¶ 70; 47 CFR 54.521(e)(4).

[7] Second Report and Order, 18 FCC Rcd at 9226, ¶ 70.

[8] 47 CFR 54.521(f).

[9] See Second Report and Order, 18 FCC Rcd at 9226, ¶ 70; 47 CFR 54.521(e)(5), 54.521(f).

[10] Second Report and Order, 18 FCC Rcd at 9225, ¶ 66.

[11] See Morrett Plea Agreement at 1.

[12] Morrett Information at 2–3.

[13] Morrett Information at 4–5.

[14] Second Report and Order, 18 FCC Rcd at 9226, ¶ 70; 47 CFR 54.521(e)(2)(i).

[15] ''Causes for suspension and debarment are the conviction of or civil judgment for attempt or commission of criminal fraud, theft, embezzlement, forgery, bribery, falsification or destruction of records, making false statements, receiving stolen property, making false claims, obstruction of justice and other fraud or criminal offense arising out of activities associated with or related to the schools and libraries support mechanism.'' 47 CFR 54.521(c). Such activities ''include the receipt of funds or discounted services through the schools and libraries support mechanism, or consulting with, assisting, or advising applicants or service providers regarding schools and libraries support mechanism described in this section ([47 CFR 54.500 *et seq.*).'' 47 CFR 54.521(a)(1).

[16] See Second Report and Order, 18 FCC Rcd at 9226, ¶ 70; 47 CFR 54.521(e)(2(i), 54.521(e)(3).

[17] Second Report and Order, 18 FCC Rcd at 9227, ¶ 74.

[18] See Id., 18 FCC Rcd at 9226, ¶ 70; 47 CFR 54.521(e)(5).

[19] Id. The Commission may reverse a debarment, or may limit the scope or period of debarment upon a finding of extraordinary circumstances, following the filing of a petition by you or an interested party or upon motion by the Commission. 47 CFR 54.521(f).

[20] Second Report and Order, 18 FCC Rcd at 9225, ¶ 67; 47 CFR 54.521(d), 54.521(g).

[21] Id.

Commission, 9300 East Hampton Drive, Capitol Heights, MD 20743.

If you have any questions, please contact Ms. Lee via mail, by telephone at (202) 418–1420 or by e-mail at *diana.lee@fcc.gov*. If Ms. Lee is unavailable, you may contact Eric Bash by telephone at (202) 418–1420 and by e-mail at *eric.bash@fcc.gov*.

Sincerely yours,

William H. Davenport,

Chief, Investigations and Hearings Division, Enforcement Bureau.

cc: Brian Perry, Esq., Nealson & Gover; Kristy Carroll, Esq., USAC (E-mail); Marty Carlson, Esq., Assistant United States Attorney, Middle District of Pennsylvania (E-mail).

[FR Doc. 05–13744 Filed 7–12–05; 8:45 am]

BILLING CODE 6712–01–P

FEDERAL COMMUNICATIONS COMMISSION

Notice of Public Information Collection(s) Being Reviewed by the Federal Communications Commission, Comments Requested

June 30, 2005.

SUMMARY: The Federal Communications Commission, as part of its continuing effort to reduce paperwork burden invites the general public and other Federal agencies to take this opportunity to comment on the following information collection(s), as required by the Paperwork Reduction Act (PRA) of 1995, Public Law No. 104–13. An agency may not conduct or sponsor a collection of information unless it displays a currently valid control number. No person shall be subject to any penalty for failing to comply with a collection of information subject to the Paperwork Reduction Act that does not display a valid control number. Comments are requested concerning (a) Whether the proposed collection of information is necessary for the proper performance of the functions of the Commission, including whether the information shall have practical utility; (b) the accuracy of the Commission's burden estimate; (c) ways to enhance the quality, utility, and clarity of the information collected; and (d) ways to minimize the burden of the collection of information on the respondents, including the use of automated collection techniques or other forms of information technology.

DATES: Written Paperwork Reduction Act (PRA) comments should be submitted on or before September 12, 2005. If you anticipate that you will be submitting comments, but find it difficult to do so within the period of time allowed by this notice, you should advise the contact listed below as soon as possible.

ADDRESSES: Direct all Paperwork Reduction Act (PRA) comments to Cathy Williams, Federal Communications Commission, Room 1–C823, 445 12th Street, SW., Washington, DC 20554 or via the Internet to *Cathy.Williams@fcc.gov*.

FOR FURTHER INFORMATION CONTACT: For additional information or copies of the information collection(s), contact Cathy Williams at (202) 418–2918 or via the Internet at *Cathy.Williams@fcc.gov*.

SUPPLEMENTARY INFORMATION: *OMB Control Number:* 3060–0126.

Title: Section 73.1820, Station Log.

Form Number: Not applicable.

Type of Review: Extension of a currently approved collection.

Respondents: Business or other for-profit entities; Not-for-profit institutions.

Number of Respondents: 15,200.

Estimated Time per Response: 0.017–0.5 hours.

Frequency of Response: Recordkeeping requirement.

Total Annual Burden: 15,095 hours.

Total Annual Cost: None.

Privacy Impact Assessment: No impact(s).

Needs and Uses: Needs: 47 CFR 73.1820 requires that each licensee of an AM, FM or TV broadcast station maintain a station log. Each entry must accurately reflect the station's operation. This log should reflect adjustments to operating parameters for AM stations with directional antennas without an approved sampling system, for all stations the actual time of any observation of extinguishment or improper operation of tower lights, and entry of each test of the Emergency Alert System (EAS) for commercial stations. The data is used by FCC staff in field investigations to assure that the licensee is operating in accordance with the technical requirements as specified in the FCC Rules and with the station authorization, and is taking reasonable measures to preclude interference to other stations. It is also used to verify that the EAS is operating properly.

Federal Communications Commission.

Marlene H. Dortch,

Secretary.

[FR Doc. 05–13478 Filed 7–12–05; 8:45 am]

BILLING CODE 6712–10–P

FEDERAL COMMUNICATIONS COMMISSION

Sunshine Act Meeting, Open Commission Meeting; Thursday, July 14, 2005

July 7, 2005.

The Federal Communications Commission will hold an Open Meeting on the subjects listed below on Thursday, July 14, 2005, which is scheduled to commence at 9:30 a.m. in Room TW–C305, at 445 12th Street, SW., Washington, DC.

Item No.	Bureau	Subject
1	Consumer & Governmental Affairs	*Title:* Telecommunications Relay Services and Speech-to-Speech Services for Individuals with Hearing and Speech Disabilities (CC Docket No. 98–67 and CG Docket No. 3–123). *Summary:* The Commission will consider an Order concerning captioned telephone service and the compensation of two-line captioned telephone calls from the Interstate TRS Fund.
2	Consumer & Governmental Affairs	*Title:* Telecommunications Relay Services and Speech-to-Speech Services for Individuals with Hearing and Speech Disabilities (CG Docket No. 03–123 and CC Docket No. 98–67). *Summary:* The Commission will consider a Report and Order concerning the Commission's rules governing the provision of Video Relay Service, including speed of answer, hours of service, and VRS Mail.
3	Consumer & Governmental Affairs	*Title:* Telecommunications Relay Services and Speech-to-Speech Services for Individuals with Hearing and Speech Disabilities (CC Docket No. 98–67 and CG Docket No. 03–123). *Summary:* The Commission will consider an Order on Reconsideration concerning the compensation of Spanish translation Video Relay Service from the Interstate TRS Fund.

Item No.	Bureau	Subject
4	Consumer & Governmental Affairs	*Title:* Closed Captioning of Video Programming and Telecommunications for the Deaf, Inc. Petition for Rulemaking. *Summary:* The Commission will consider a Notice of Proposed Rulemaking regarding the Commission's closed captioning rules and a related Petition for Rulemaking filed by Telecommunications for the Deaf, Inc. and several other consumer organizations representing deaf and hard of hearing individuals, seeking the establishment of quality standards and compliance mechanisms for closed captioning.
5	Media	*Title:* 2002 Biennial Regulatory Review—Review of the Commission's Broadcast Ownership Rules and Other Rules Adopted Pursuant to Section 202 of the Telecommunications Act of 1996 (MB Docket No. 02–277); Cross-Ownership of Broadcast Stations and Newspapers (MM Docket No. 01–235); Rules and Policies Concerning Multiple Ownership of Radio Broadcast Stations in Local Markets (MM Docket No. 01–317); and Definition of Radio Markets (MM Docket No. 00–244). *Summary:* The Commission will consider a Further Notice of Proposed Rulemaking concerning its 2002 biennial review of its broadcast ownership rules.

The meeting site is fully accessible to people using wheelchairs or other mobility aids. Meeting agendas and handouts will be provided in accessible formats; sign language interpreters, open captioning, and assistive listening devices will be provided on site. Request other reasonable accommodations for people with disabilities as early as possible; please allow at least 5 days advance notice. Include a description of the accommodation you will need including as much detail as you can. Also include a way we can contact you if we need more information. Last minute requests will be accepted, but may be impossible to fill. Send an e-mail to: *fcc504@fcc.gov* or call the Consumer & Governmental Affairs Bureau at 202–418–0530 (voice), 202–418–0432 (tty).

Additional information concerning this meeting may be obtained from Audrey Spivack or David Fiske, Office of Media Relations, (202) 418–0500; TTY 1–888–835–5322. Audio/Video coverage of the meeting will be broadcast live with open captioning over the Internet from the FCC's Audio/Video Events Web page at *http://www.fcc.gov/realaudio.*

For a fee this meeting can be viewed live over George Mason University's Capitol Connection. The Capitol Connection also will carry the meeting live via the Internet. To purchase these services call (703) 993–3100 or go to *http://www.capitolconnection.gmu.edu.*

Copies of materials adopted at this meeting can be purchased from the FCC's duplicating contractor, Best Copy and Printing, Inc. (202) 488–5300; Fax (202) 488–5563; TTY (202) 488–5562. These copies are available in paper format and alternative media, including large print/type; digital disk; and audio and video tape. Best Copy and Printing, Inc. may be reached by e-mail at *FCC@BCPIWEB.com.*

Federal Communications Commission.

Marlene H. Dortch,

Secretary.

[FR Doc. 05–13854 Filed 7–11–05; 11:26 am]

BILLING CODE 6712–01–P

FEDERAL COMMUNICATIONS COMMISSION

[Report No. 2718]

Petitions for Reconsideration of Action in Rulemaking Proceeding

June 28, 2005.

Petitions for Reconsideration have been filed in the Commission's Rulemaking proceeding listed in this Public Notice and published pursuant to 47 CFR Section 1.429(e). The full text of this document is available for viewing and copying in Room CY–B402, 445 12th Street, SW., Washington, DC or may be purchased from the Commission's copy contractor, Best Copy and Printing, Inc. (BCPI) (1–800–378–3160). Oppositions to these petitions must be filed by July 28, 2005. See § 1.4(b)(1) of the Commission's rules (47 CFR 1.4(b)(1)). Replies to an opposition must be filed within 10 days after the time for filing oppositions have expired.

Subject: In the Matter of Request of Amendment of Section 73.202(b) Table of Allotments FM Broadcast Stations (Shorter, Orrville, Selma and Birmingham, Alabama (MB Docket No. 04–201).

Number of Petitions Filed: 1.

Marlene H. Dortch,

Secretary.

[FR Doc. 05–13475 Filed 7–12–05; 8:45 am]

BILLING CODE 6712–01–P

FEDERAL MARITIME COMMISSION

Notice of Agreements Filed

The Commission hereby gives notice of the filing of the following agreements under the Shipping Act of 1984. Interested parties may obtain copies of agreements by contacting the Commission's Office of Agreements at 202–523–5793 or via e-mail at *tradeanalysis@fmc.gov.* Interested parties may submit comments on an agreement to the Secretary, Federal Maritime Commission, Washington, DC 20573, within 10 days of the date this notice appears in the **Federal Register**.

Agreement No.: 011383–039.

Title: Venezuelan Discussion Agreement.

Parties: A.P. Moller-Maersk A/S, Hamburg-Süd, Seaboard Marine Ltd., King Ocean Service de Venezuela, and SeaFreight Line.

Filing Party: Wayne R. Rohde, Esq.; Sher & Blackwell LLP; 1850 M Street, NW., Suite 900; Washington, DC 20036.

Synopsis: The amendment removes Maersk as a party to the agreement.

Agreement No.: 011550–010.

Title: ABC Discussion Agreement.

Parties: A.P. Moller-Maersk A/S, Hamburg-Süd, King Ocean Services Limited, and Seafreight Line.

Filing Party: Wayne R. Rohde, Esq.; Sher & Blackwell LLP; 1850 M Street, NW., Suite 900; Washington, DC 20036.

Synopsis: The amendment removes Maersk as a party to the agreement.

Agreement No.: 011898–001.

Title: APS Joint Service Agreement.

Parties: BBC Chartering & Logistic GmbH & Co. KG (''BBC''), Clipper Elite Carriers Ltd. (''Clipper'') and Asia Project Services Ltd. (''APS'').

Filing Party: Matthew Thomas, Esq.; Troutman Sanders LLP; 401 9th Street, NW., Suite 1000; Washington, DC 20004–2134.

Synopsis: The amendment clarifies the parties' authority to discuss and

agree on rates, charges, and services outside of the joint service. The parties request expedited review.

Agreement No.: 200694–003.

Title: Crane Relocation Agreement.

Parties: Horizon Lines, LLC; Matson Navigation Company, Inc.; and The Port Authority of Guam.

Filing Party: Claudia E. Stone, Esq.; Horizon Lines, LLC; 4064 Colony Road, Suite 200; Charlotte, NC 28211.

Synopsis: The amendment provides for the assignment of SL Service Inc.''s (formerly Sea-Land Service, Inc.) rights and obligations under the agreement to Horizon Lines.

By Order of the Federal Maritime Commission.

Dated: July 8, 2005.

Karen V. Gregory, Assistant Secretary.

[FR Doc. 05–13794 Filed 7–12–05; 8:45 am]

BILLING CODE 6730–01–P

FEDERAL RESERVE SYSTEM

Change in Bank Control Notices; Acquisition of Shares of Bank or Bank Holding Companies

The notificants listed below have applied under the Change in Bank Control Act (12 U.S.C. 1817(j)) and § 225.41 of the Board's Regulation Y (12 CFR 225.41) to acquire a bank or bank holding company. The factors that are considered in acting on the notices are set forth in paragraph 7 of the Act (12 U.S.C. 1817(j)(7)).

The notices are available for immediate inspection at the Federal Reserve Bank indicated. The notices also will be available for inspection at the office of the Board of Governors. Interested persons may express their views in writing to the Reserve Bank indicated for that notice or to the offices of the Board of Governors. Comments must be received not later than July 28, 2005.

A. Federal Reserve Bank of Richmond (A. Linwood Gill, III, Vice President) 701 East Byrd Street, Richmond, Virginia 23261-4528:

1. Charles Walters, Greenville, South Carolina; Charles Walters Ltd., Partnership, Greenville, South Carolina; Roger Walters, Cashiers, North Carolina; Jacqueline Walters, Cashiers, North Carolina; James Walters, Gainesville, Georgia; Phoenix Financial Holdings, Inc., Gainesville, Georgia; and Walters Income Properties, LP, Gainesville, Georgia, as a group acting in concert; to retain voting shares of Independence Bancshares, Inc., Greenville, South Carolina, and thereby indirectly retain voting shares of Independence National Bank, Greenville, South Carolina.

B. Federal Reserve Bank of Minneapolis (Jacqueline G. King, Community Affairs Officer) 90 Hennepin Avenue, Minneapolis, Minnesota 55480-0291:

1. David A. Callies, Howard, South Dakota; Charles L. Christensen, Arlington, South Dakota; Blaine M. Hoff, Volga, South Dakota; Craig H. Steen, Volga, South Dakota; Lyle S. Strande, Volga, South Dakota; and Janelle M. Thompson, Bruce, South Dakota, as a group acting in concert, and Van Dusen Fishback, Brookings, South Dakota, as an individual; to acquire voting shares of North Central Financial Services, Inc., Volga, South Dakota, and thereby indirectly acquire voting shares of First National Bank of Volga, Volga, South Dakota.

Board of Governors of the Federal Reserve System, July 8, 2005.

Robert deV. Frierson,

Deputy Secretary of the Board.

[FR Doc. 05–13772 Filed 7–12–05; 8:45 am]

BILLING CODE 6210–01–S

FEDERAL RESERVE SYSTEM

Formations of, Acquisitions by, and Mergers of Bank Holding Companies

The companies listed in this notice have applied to the Board for approval, pursuant to the Bank Holding Company Act of 1956 (12 U.S.C. 1841 *et seq.*) (BHC Act), Regulation Y (12 CFR Part 225), and all other applicable statutes and regulations to become a bank holding company and/or to acquire the assets or the ownership of, control of, or the power to vote shares of a bank or bank holding company and all of the banks and nonbanking companies owned by the bank holding company, including the companies listed below.

The applications listed below, as well as other related filings required by the Board, are available for immediate inspection at the Federal Reserve Bank indicated. The application also will be available for inspection at the offices of the Board of Governors. Interested persons may express their views in writing on the standards enumerated in the BHC Act (12 U.S.C. 1842(c)). If the proposal also involves the acquisition of a nonbanking company, the review also includes whether the acquisition of the nonbanking company complies with the standards in section 4 of the BHC Act (12 U.S.C. 1843). Unless otherwise noted, nonbanking activities will be conducted throughout the United States. Additional information on all bank holding companies may be obtained from the National Information Center website at *www.ffiec.gov/nic/*.

Unless otherwise noted, comments regarding each of these applications must be received at the Reserve Bank indicated or the offices of the Board of Governors not later than August 8, 2005.

A. Federal Reserve Bank of St. Louis (Glenda Wilson, Community Affairs Officer) 411 Locust Street, St. Louis, Missouri 63166-2034:

1. Union Bankshares, Inc., Mena, Arizona; to acquire 100 percent of the voting shares of First Paris Holding Company, Paris, Arkansas, and thereby indirectly acquire voting shares of The First National Bank at Paris, Paris, Arkansas.

B. Federal Reserve Bank of San Francisco (Tracy Basinger, Director, Regional and Community Bank Group) 101 Market Street, San Francisco, California 94105-1579:

1. Mission Valley Bancorp, Sun Valley, California; to become a bank holding company by acquiring 100 percent of the voting shares of Mission Valley Bank, Sun Valley, California.

Board of Governors of the Federal Reserve System, July 7, 2005.

Robert deV. Frierson,

Deputy Secretary of the Board.

[FR Doc. 05–13724 Filed 7–12–05; 8:45 am]

BILLING CODE 6210–01–S

FEDERAL RESERVE SYSTEM

Formations of, Acquisitions by, and Mergers of Bank Holding Companies

The companies listed in this notice have applied to the Board for approval, pursuant to the Bank Holding Company Act of 1956 (12 U.S.C. 1841 *et seq.*) (BHC Act), Regulation Y (12 CFR Part 225), and all other applicable statutes and regulations to become a bank holding company and/or to acquire the assets or the ownership of, control of, or the power to vote shares of a bank or bank holding company and all of the banks and nonbanking companies owned by the bank holding company, including the companies listed below.

The applications listed below, as well as other related filings required by the Board, are available for immediate inspection at the Federal Reserve Bank indicated. The application also will be available for inspection at the offices of the Board of Governors. Interested persons may express their views in writing on the standards enumerated in the BHC Act (12 U.S.C. 1842(c)). If the proposal also involves the acquisition of a nonbanking company, the review also includes whether the acquisition of the nonbanking company complies with the standards in section 4 of the BHC Act (12 U.S.C. 1843). Unless otherwise

noted, nonbanking activities will be conducted throughout the United States. Additional information on all bank holding companies may be obtained from the National Information Center website at *www.ffiec.gov/nic/*.

Unless otherwise noted, comments regarding each of these applications must be received at the Reserve Bank indicated or the offices of the Board of Governors not later than August 8, 2005.

A. Federal Reserve Bank of Boston (Richard Walker, Community Affairs Officer) P.O. Box 55882, Boston, Massachusetts 02106-2204:

1. Salem Five Bancorp, Salem, Massachusetts; to become a bank holding company by acquiring 100 percent of the voting shares of Salem Five Cents Savings Bank, Salem, Massachusetts.

B. Federal Reserve Bank of Chicago (Patrick M. Wilder, Assistant Vice President) 230 South LaSalle Street, Chicago, Illinois 60690-1414:

1. Commerce Financial Holdings, Inc., Cedarburg, Wisconsin; to become a bank holding company by acquiring 100 percent of the voting shares of Commerce State Bank, West Bend, Wisconsin.

C. Federal Reserve Bank of St. Louis (Glenda Wilson, Community Affairs Officer) 411 Locust Street, St. Louis, Missouri 63166-2034:

1. Home Bancshares, Inc., Conway, Arkansas; to merge with Mountain View Bancshares, Inc., Mountain View, Arkansas, and thereby indirectly acquire Bank of Mountain View, Mountain View, Arkansas.

D. Federal Reserve Bank of Minneapolis (Jacqueline G. King, Community Affairs Officer) 90 Hennepin Avenue, Minneapolis, Minnesota 55480-0291:

1. Vision Bancshares, Inc., St. Louis Park, Minnesota; to become a bank holding company by acquiring 100 percent of the voting shares of Vision Bank, St. Louis Park, Minnesota. Comments regarding this application should be received not later than July 28, 2005.

Board of Governors of the Federal Reserve System, July 8, 2005.

Robert deV. Frierson,

Deputy Secretary of the Board.

[FR Doc. 05–13770 Filed 7–12–05; 8:45 am]

BILLING CODE 6210–01–S

FEDERAL RESERVE SYSTEM

Notice of Proposals to Engage in Permissible Nonbanking Activities or to Acquire Companies that are Engaged in Permissible Nonbanking Activities

The companies listed in this notice have given notice under section 4 of the Bank Holding Company Act (12 U.S.C. 1843) (BHC Act) and Regulation Y (12 CFR Part 225) to engage *de novo*, or to acquire or control voting securities or assets of a company, including the companies listed below, that engages either directly or through a subsidiary or other company, in a nonbanking activity that is listed in § 225.28 of Regulation Y (12 CFR 225.28) or that the Board has determined by Order to be closely related to banking and permissible for bank holding companies. Unless otherwise noted, these activities will be conducted throughout the United States.

Each notice is available for inspection at the Federal Reserve Bank indicated. The notice also will be available for inspection at the offices of the Board of Governors. Interested persons may express their views in writing on the question whether the proposal complies with the standards of section 4 of the BHC Act. Additional information on all bank holding companies may be obtained from the National Information Center website at *www.ffiec.gov/nic/*.

Unless otherwise noted, comments regarding the applications must be received at the Reserve Bank indicated or the offices of the Board of Governors not later than July 28, 2005.

A. Federal Reserve Bank of Chicago (Patrick M. Wilder, Assistant Vice President) 230 South LaSalle Street, Chicago, Illinois 60690-1414:

1. Marshall & Ilsley Corporation, Milwaukee, Wisconsin; to acquire through its wholly–owned subsidiary, Metavante Corporation, all of the limited liability company interests of TREEV LLC, Herndon, Virginia, and thereby engage in data processing pursuant to section 225.28(b)14 of Regulation Y.

Board of Governors of the Federal Reserve System, July 8, 2005.

Robert deV. Frierson,

Deputy Secretary of the Board.

[FR Doc.05–13771 Filed 7–12–05; 8:45 am]

BILLING CODE 6210–01–S

DEPARTMENT OF HEALTH AND HUMAN SERVICES

Centers for Disease Control and Prevention

Unrealized Opportunities for Clinical Prevention Practices

Announcement Type: New.

Funding Opportunity Number: AA060.

Catalog of Federal Domestic Assistance Number: 93.283.

Key Dates: Letter of Intent Deadline: July 25, 2005.

Application Deadline: August 12, 2005.

I. Funding Opportunity Description

Authority: This program is authorized under the section 317 (k)(2) of the Public Health Service Act [42 U.S.C. sections 247b (k)(2)] as amended.

Purpose: The purpose of the program is to address unrealized opportunities for clinical prevention practices by stimulating innovative partnerships and strategies between the private health care sector and public health through collaborative efforts with national organizations and their affiliated members. This program addresses the ''Healthy People 2010'' focus areas of heart disease and stroke, immunization and infectious diseases, physical activity and fitness, nutrition and overweight, public health infrastructure, tobacco use and overarching disease prevention, health promotion and preparedness goals.

Measurable outcomes of the program will be in alignment with one or more of the following performance goal(s) for the Division of Private and Public Partnerships: (a) Develops strategies and innovative solutions for the health care sector and CDC partners; (b) identifies and provides services, resources, and customer-specific materials; (c) create opportunities for collaboration with healthcare delivery system stakeholders and public health, including public health preparedness and communication.

This announcement is only for non-research activities supported by CDC/ATSDR. If research is proposed, the application will not be reviewed. For the definition of research, please see the CDC web site at the following Internet address: *http://www.cdc.gov/od/ads/opspoll1.htm*.

Activities: Awardee activities for this program are as follows: Awardee will propose activities to address unrealized prevention and health promotion opportunities.

The applicant must consider sub-populations affected by racial/ethnic disparities in health status, risk factors and/or receipt of health services (Institute of Medicine, Unequal Treatment: Confronting Racial and Ethnic Disparities in Healthcare, 2002 and Unequal Treatment: What Healthcare Providers Need to Know about Racial and Ethnic Disparities in Health-Care, 2002).

In addition applicants are encouraged to consider the unique needs of people in various stages of their lives, including children and adolescents.

Applicants should specify if they are applying for Option A, Option B or both. Applicants who do not specify which option(s) of activities they intend to apply for will not be considered.

Option A—National Partnerships

The objective of this Option is to foster partnerships between public health and national organizations representing the interests of health plans/insurers/health care delivery systems and organizations that focus on quality improvement. The activities in the Option should include:

- Using organizational resources to assist CDC in recognizing and understanding important emerging health systems trends that affect the public's health. Explore opportunities to use mechanisms such as accreditation, performance measurement, and financial incentives to improve health outcomes.
- Identify a focus on quality improvement through the above mechanisms.
- Develop case examples of effective health plan/health organization initiatives that utilize assessment tools (*e.g.*, Health Risk Assessments/ Appraisals etc.) to identify and stratify explicitly preventable health care conditions for a given beneficiary population. Using the information from these assessments coupled with other health information; describe promotion and deployment of innovative education/coaching, incentive-based health behavior change programs, prevention-oriented care/disease-management or similar strategies to reduce preventable disease burden and the associated health care costs in a beneficiary population. Identify programs that address CDC's Health Protection Goals for target areas. (*http://www.cdc.gov/futures/Goals*). Plan and execute a comprehensive plan to assess effectiveness of the outlined strategies.
- Propose conferences, meetings, seminars, or symposia that can be expected to have beneficial effects on health outcomes. CDC representatives will be part of the planning stage of these activities and as active participants in the final program.

Option B—Small-Scale Innovation Design and Evaluation

Using health care organization processes, accreditation, or certification as a framework for developing new strategies, propose small-scale exploratory activities in a preferred provider or network setting that evaluate innovative system interventions to address unrealized prevention opportunities in populations, particularly sub-populations affected by racial/ethnic disparities. Activities should incorporate at least one of the following:

- Innovative payment strategies;
- New methods of communicating prevention messages to consumers;
- Activities to increase consumer participation in shared decision-making for preventive care;
- Use of consumer ''health-coaches'';
- New accreditation strategies;
- Innovations in supporting information technology infrastructure in health care settings (*e.g.*, develop innovative strategies to improve prevention messages and services using health information technology);
- New approaches for linkages of data (*e.g.*, medical/pharmacy/disability claims and health risk appraisal data);
- Novel incentive systems to improve prevention/health promotion; or,
- Community-based participatory models (*e.g.*, community-based health promotion/clinical practice model) as innovative strategies to improve clinical prevention practices.

In a cooperative agreement, CDC staff is substantially involved in the program activities, above and beyond routine grant monitoring. CDC Activities for this program are as follows:

- Provide an updated list of CDC goals, priorities and mission; technical assistance; and monitoring of the progress of this cooperative agreement.
- Foster the formation and growth of national and regional public-private partnerships that support prevention research and evidence-based prevention practice.
- Assist with the development of conferences, meetings, seminars and symposia which explore and expand areas of commonality around prevention between public health and health care sectors.

II. Award Information

Type of Award: Cooperative Agreement.

Fiscal Year Funds: 2005.

Approximate Total Funding: $500,000–$700,000.

Approximate Number of Awards: three to five.

Approximate Average Award: It is expected that the average award will range from approximately $100,000 to $230,000.

Floor of Award Range: None.

Ceiling of Award Range: $230,000.

Anticipated Award Date: August 30, 2005.

Budget Period Length: 12 months.

Project Period Length: Three years.

Throughout the project period, CDC's commitment to continuation of awards will be conditioned on the availability of funds, evidence of satisfactory progress by the recipient (as documented in required reports), and the determination that continued funding is in the best interest of the Federal Government.

III. Eligibility Information

III.1. Eligible applicants

Applications may be submitted by Private and Public nonprofit organizations such as:

- Public nonprofit organizations
- Private nonprofit organizations

This announcement will be for limited competition. It is in the best interest of the government to work with organizations that have members who are from or connect to the healthcare delivery system through which CDC science is implemented. These applicants will bring expertise for collaborative activities that will assist CDC in furthering its impact goals.

Applicants should be able to work with communities and sub-populations as a non-governmental organization (NGO). Applicants should be experienced in developing all aspects of health plan initiatives. Applicants should demonstrate an expertise in promoting and disseminating innovative public education and public information interventions through health care organizations. Applicants should directly address CDC health protection goals, and impact large numbers of constituents through private sector initiatives.

III.2. Cost Sharing or Matching

Matching funds are not required for this program.

III.3. Other

If you request a funding amount greater than the ceiling of the award range, your application will be considered non-responsive, and will not be entered into the review process. You will be notified that your application

did not meet the submission requirements.

Special Requirements: If your application is incomplete or non-responsive to the special requirements listed in this section, it will not be entered into the review process. You will be notified that your application did not meet submission requirements.

- Late applications will be considered non-responsive. See section ''IV.3. Submission Dates and Times'' for more information on deadlines.
- Please list all Options of activity proposed in the application. Applicants failing to specify Option(s) of activities will be judged as incomplete or non-responsive to the requirements listed in this section, and it will not be entered into the review process. You will be notified that your application did not meet submission requirements.

Note: Title 2 of the United States Code Section 1611 states that an organization described in Section 501(c)(4) of the Internal Revenue Code that engages in lobbying activities is not eligible to receive Federal funds constituting an award, grant, or loan.

IV. Application and Submission Information

IV.1. Address To Request Application Package

To apply for this funding opportunity use application form PHS 5161–1.

Electronic Submission: CDC strongly encourages you to submit your application electronically by utilizing the forms and instructions posted for this announcement on www.Grants.gov, the official Federal agencywide E-grant Web site. Only applicants who apply online are permitted to forego paper copy submission of all application forms.

Paper Submission: Application forms and instructions are available on the CDC Web site, at the following Internet address: *http://www.cdc.gov/od/pgo/forminfo.htm.*

If you do not have access to the Internet, or if you have difficulty accessing the forms on-line, you may contact the CDC Procurement and Grants Office Technical Information Management Section (PGO–TIM) staff at: 770–488–2700. Application forms can be mailed to you.

IV.2. Content and Form of Submission

Letter of Intent (LOI): Your LOI must be written in the following format:

- Maximum number of pages: Two.
- Font size: 12-point unreduced.
- Double spaced.
- Paper size: 8.5 by 11 inches.
- Page margin size: One inch.
- Printed only on one side of page.
- Written in plain language, avoid jargon.

Your LOI must contain the following information:

- Your organization's intent to apply for this program announcement. Please specify if you are applying for Option A, Option B, or both. LOI that do not specify which Option(s) of activities will be judged incomplete or non-responsive to the requirements listed in this section and will not be considered for a full application review process.

Application: Electronic Submission: You may submit your application electronically at: *http://www.grants.gov.* Applications completed online through Grants.gov are considered formally submitted when the applicant organization's Authorizing Official electronically submits the application to *http://www.grants.gov.* Electronic applications will be considered as having met the deadline if the application has been submitted electronically by the applicant organization's Authorizing Official to Grants.gov on or before the deadline date and time.

It is strongly recommended that you submit your grant application using Microsoft Office products (*e.g.*, Microsoft Word, Microsoft Excel, etc.). If you do not have access to Microsoft Office products, you may submit a PDF file. Directions for creating PDF files can be found on the Grants.gov Web site. Use of file formats other than Microsoft Office or PDF may result in your file being unreadable by our staff.

CDC recommends that you submit your application to Grants.gov early enough to resolve any unanticipated difficulties prior to the deadline. You may also submit a back-up paper submission of your application. Any such paper submission must be received in accordance with the requirements for timely submission detailed in Section IV.3. of the grant announcement. The paper submission must be clearly marked: ''BACK-UP FOR ELECTRONIC SUBMISSION.'' The paper submission must conform with all requirements for non-electronic submissions. If both electronic and back-up paper submissions are received by the deadline, the electronic version will be considered the official submission.

Paper Submission: If you plan to submit your application by hard copy, submit the original and two hard copies of your application by mail or express delivery service. Refer to section IV.6. Other Submission Requirements for submission address.

You must submit a project narrative with your application forms. The narrative must be submitted in the following format:

- Maximum number of pages: 20. If your narrative exceeds the page limit, only the first will be reviewed.
- Font size: 12 point unreduced.
- Double spaced.
- Paper size: 8.5 by 11 inches.
- Page margin size: One inch.
- Printed only on one side of page.
- Held together only by rubber bands or metal clips; not bound in any other way.

Your narrative should address activities to be conducted over the entire project period, and must include the following items in the order listed:

1. The activity Option(s) for which you are applying under this Program Announcement.
2. Organizational description include full description of members/affiliates and previous experience and full description of any coalition and committed co-conveners assembled for this announcement, if applicable. (Please see Section III.1. Eligible Applicants for specific eligibility information for each Option of activity).

If you are applying for more than one Option of activity, you must submit a separate description of items three to seven (below) for each Option of activity (See also allowed adjustment in page length described above).

3. Goals and Objectives
4. Methods
5. Evaluation
6. Plan for Dissemination of findings
7. Budget Justification (not included in page limit)

Additional information may be included in the application appendices. The appendices will not be counted toward the narrative page limit. This additional information can include:

- Curriculum Vitae, Resumes, Organizational Charts, Descriptions of other community activities for Option B activities, brief examples of previous experience (*e.g.* products), etc.

You are required to have a Dun and Bradstreet Data Universal Numbering System (DUNS) number to apply for a grant or cooperative agreement from the Federal government. The DUNS number is a nine-digit identification number, which uniquely identifies business entities. Obtaining a DUNS number is easy and there is no charge. To obtain a DUNS number, access *www.dunandbradstreet.com* or call 1–866–705–5711.

For more information, see the CDC Web site at: *http://www.cdc.gov/od/pgo/funding/pubcommt1.htm.*

If your application form does not have a DUNS number field, please write your DUNS number at the top of the first

page of your application, and/or include your DUNS number in your application cover letter.

Additional requirements that may require you to submit additional documentation with your application are listed in section ''VI.2. Administrative and National Policy Requirements.''

IV.3. Submission Dates and Times

LOI Deadline Date: July 25, 2005.

CDC requests that you send a LOI if you intend to apply for this program. Although the LOI is not required, not binding, and does not enter into the review of your subsequent application, the LOI will be used to gauge the level of interest in this program and to allow CDC to plan the application review.

Application Deadline Date: August 12, 2005.

Explanation of Deadlines: LOIs and Applications must be received in the CDC Procurement and Grants Office by 4 p.m. Eastern Time on the deadline date. If you submit your LOI and application by the United States Postal Service or commercial delivery service, you must ensure that the carrier will be able to guarantee delivery by the closing date and time. If CDC receives your submission after closing due to: (1) Carrier error, when the carrier accepted the package with a guarantee for delivery by the closing date and time, or (2) significant weather delays or natural disasters, you will be given the opportunity to submit documentation of the carriers guarantee. If the documentation verifies a carrier problem, CDC will consider the submission as having been received by the deadline.

This announcement is the definitive guide on LOI and application content, submission address, and deadline. It supersedes information provided in the application instructions. If your submission does not meet the deadline above, it will not be eligible for review, and will be discarded. You will be notified that you did not meet the submission requirements.

Electronic Submission: If you submit your application electronically with Grants.gov, your application will be electronically time/date stamped which will serve as receipt of submission. In turn, you will receive an e-mail notice of receipt when CDC receives the application. All electronic applications must be submitted by 4 p.m. Eastern Time on the application due date.

Paper Submission: CDC will not notify you upon receipt of your paper submission. If you have a question about the receipt of your LOI or application, first contact your courier. If you still have a question, contact the PGO–TIM staff at: 770–488–2700. Before calling, please wait two to three days after the submission deadline. This will allow time for submissions to be processed and logged.

IV.4. Intergovernmental Review of Applications

Executive Order 12372 does not apply to this program.

IV.5. Funding Restrictions

Restrictions, which must be taken into account while writing your budget, are as follows:

- Funds may not be used for research.
- Reimbursement of pre-award costs is not allowed.
- Construction costs will not be allowed in this cooperative agreement.
- Cooperative agreement funds can not be used for food, refreshments or entertaining expenses.

If you are requesting indirect costs in your budget, you must include a copy of your indirect cost rate agreement. If your indirect cost rate is a provisional rate, the agreement should be less than 12 months of age.

Guidance for completing your budget can be found on the CDC Web site, at the following Internet address: *http://www.cdc.gov/od/pgo/funding/budgetguide.htm.*

IV.6. Other Submission Requirements

LOI Submission Address: Submit your LOI by express mail, delivery service, fax, or E-mail to: Frank Lochner, CDC, National Center for Health Marketing, Division of Private and Public Partnerships, 4770 Buford Highway, NE., MAILSTOP K–39, Atlanta, GA 30341. Telephone: 770–488–1124. Fax: 770–488–2553. E-mail: *FLochner@cdc.gov.*

Application Submission Address: Electronic Submission: CDC strongly encourages applicants to submit electronically at: *http://www.Grants.gov.* You will be able to download a copy of the application package from *http://www.Grants.gov,* complete it offline, and then upload and submit the application via the Grants.gov site. E-mail submissions will not be accepted. If you are having technical difficulties in Grants.gov, they can be reached by E-mail at *http://www.support@grants.gov* or by phone at 1–800–518–4726 (1–800–518–GRANTS). The Customer Support Center is open from 7 a.m. to 9 p.m. Eastern Time, Monday through Friday.

Paper Submission: If you chose to submit a paper application, submit the original and two hard copies of your application by mail or express delivery service to: Technical Information Management-RFA AA060, CDC Procurement and Grants Office, 2920 Brandywine Road, Atlanta, GA 30341.

V. Application Review Information

V.1. Criteria

Applicants are required to provide measures of effectiveness that will demonstrate the accomplishment of the various identified objectives of the cooperative agreement. Measures of effectiveness must relate to the performance goals stated in the ''Purpose'' section of this announcement. Measures must be objective and quantitative, and must measure the intended outcome. These measures of effectiveness must be submitted with the application and will be an element of evaluation.

Your application will be evaluated against the following criteria:

Submit your application as one; however, each activity Option that is submitted will be evaluated separately. It is possible that in the case of an application that includes both Options—one or both Options of activities may not be funded. Applicants must submit separate Goals and Objectives, Methods (including Timeline and Staffing/Personnel needs and descriptions), Evaluation, Dissemination, Letters of Support (if applicable), and Budget for each Option of activity in the application. The applicant should only include one Organizational description, unless additional information is needed for the proposed Option of activity.

Methods (35 points)

Are the proposed methods feasible? Will applicant accomplish the program goals? Are the applicant's plans for conducting the required activities realistic and feasible within existing programmatic and fiscal restrictions? Do program activities use a life-stages approach? Is a detailed timeline included which relates to the goals, objectives and methods? Does the applicant demonstrate adequate and appropriate Staffing/Personnel needs and provide a description of current and needed personnel?

Goals and Objectives (25 points)

Does the applicant clearly re-state their choice of activities listed under Option A and/or Option B? Do the proposed goals and objectives stated by the applicant meet the required activities specified under each Option of activity in the ''Recipient Activities'' section of this announcement? Are the goals and objectives listed measurable, specific, time-phased and realistic?

Organizational Description (15 points)

Does the applicant have an organizational structure, mission, goals and objectives, activities, functions and membership/affiliates on a national level that are consistent with the purpose of this Program Announcement? Does the applicant demonstrate past experience using a collaborative approach with health care organizations to evaluate and improve the delivery of health services or policy? Does the applicant show evidence (past or current) of research, programmatic or broad policy development work in the areas of health promotion, disease prevention, disease management, care management, quality improvement, accreditation of health care organizations, managed care or chronic care management? Does the applicant show evidence of work that focuses on racial and ethnic minorities in order to reduce health care disparities through improved prevention strategies?

Evaluation (15 points)

Has the applicant developed on-going methods for evaluating project activities that are realistic, time-framed and measurable? Does the applicant build in capacity for mid-course correction(s) based on those evaluations? Does the applicant include plans for evaluation towards stated goals and objectives which include partner/co-convener and end-user feedback? How does the applicant incorporate guidance and feedback from CDC in the project's evaluation?

Dissemination (10 points)

Does the applicant present a clear and timely plan for disseminating findings from activities? Will these dissemination plans reach members/affiliates, health care organizations, consumers and/or public health audiences? Is an array of dissemination strategies proposed based on the target audience which uses a life stages approach? Will dissemination activities be included in the project evaluation?

Statement of Applying for Option A and/or Option B Activities (Not Scored)

Please list all Options of activity proposed in the application. Applicants failing to specify Option(s) of activities will be judged as incomplete or non-responsive to the requirements listed in this section, and it will not be entered into the review process. You will be notified that your application did not meet submission requirements.

Budget (Not Scored)

Is the proposed budget for each Option of activity (and for the whole application) reasonable within the amount requested, justified by the application content, and consistent with the specifications listed in this announcement?

V.2. Review and Selection Process

Applications will be reviewed for completeness by the Procurement and Grants Office (PGO) staff and for responsiveness by the Division of Private and Public Partnerships. Incomplete applications and applications that are non-responsive to the eligibility criteria will not advance through the review process. Applicants will be notified that their application did not meet submission requirements.

An objective review panel comprised of CDC employees outside the funding center will evaluate complete and responsive applications according to the criteria listed in the ''V.1. Criteria'' section above.

Applications will be funded in order by score and rank determined by the review panel. CDC will provide justification for any decision to fund out of rank order.

V.3. Anticipated Announcement and Award Dates

Award date: August 30, 2005.

VI. Award Administration Information

VI.1. Award Notices

Successful applicants will receive a Notice of Award (NoA) from the CDC Procurement and Grants Office. The NoA shall be the only binding, authorizing document between the recipient and CDC. The NoA will be signed by an authorized Grants Management Officer, and mailed to the recipient fiscal officer identified in the application.

Unsuccessful applicants will receive notification of the results of the application review by mail.

VI.2. Administrative and National Policy Requirements

45 CFR Part 74 and Part 92

For more information on the Code of Federal Regulations, see the National Archives and Records Administration at the following Internet address: *http://www.access.gpo.gov/nara/cfr/cfr-table-search.html*.

An additional Certifications form from the PHS5161–1 application needs to be included in your Grants.gov electronic submission only. Refer to *http://www.cdc.gov/od/pgo/funding/PHS5161–1-Certificates.pdf*. Once the form is filled out attach it to your Grants.gov submission as Other Attachments Form.

The following additional requirements apply to this project:

- AR–8 Public Health System Reporting Requirements.
- AR–9 Paperwork Reduction Act Requirements.
- AR–10 Smoke-Free Workplace Requirements.
- AR–11 Healthy People 2010.
- AR–12 Lobbying Restrictions.
- AR–14 Accounting System Requirements.
- AR–15 Proof of Non-Profit Status.
- AR–20 Conference Support.
- AR–21 Small, Minority, and Women-Owned Business.
- AR–25 Release and Sharing of Data.

Additional information on these requirements can be found on the CDC Web site at the following Internet address: *http://www.cdc.gov/od/pgo/funding/ARs.htm*.

VI.3. Reporting Requirements

You must provide CDC with an original, plus two hard copies of the following reports:

1. Interim progress report, due no less than 90 days before the end of the budget period. The progress report will serve as your non-competing continuation application, and must contain the following elements:

a. Current Budget Period Activities Objectives.

b. Current Budget Period Financial Progress.

c. New Budget Period Program Proposed Activity Objectives.

d. Budget.

e. Measures of Effectiveness.

f. Additional Requested Information.

2. Financial status report and annual progress report, no more than 90 days after the end of the budget period.

3. Final financial and performance reports, no more than 90 days after the end of the project period.

These reports must be mailed to the Grants Management Specialist listed in the ''Agency Contacts'' section of this announcement.

VII. Agency Contacts

We encourage inquiries concerning this announcement. For general questions, contact: Technical Information Management Section, CDC Procurement and Grants Office, 2920 Brandywine Road, Atlanta, GA 30341. Telephone: 770–488–2700.

For program technical assistance, contact: Frank Lochner, CDC, National Center for Health Marketing, Division of Private and Public Partnerships, Address: 4770 Buford Highway, MAILSTOP K–39, Atlanta, GA 30341. Telephone: 770–488–1124/2460. Fax:

770–488–2553. E-mail: *FLochner@cdc.gov*.

For financial, grants management, or budget assistance, contact: Angela Webb, Grants Management Specialist, CDC Procurement and Grants Office, 2920 Brandywine Road, Atlanta, GA 30341. Telephone: 770–488–2784. Fax: 770–488–2777. E-mail: *aqw6@cdc.gov*.

VIII. Other Information

This and other CDC funding opportunity announcements can be found on the CDC Web site, Internet address: www.cdc.gov. Click on ''Funding'' then ''Grants and Cooperative Agreements.''

Dated: July 7, 2005.

William P. Nichols,

Director, Procurement and Grants Office, Centers for Disease Control and Prevention.

[FR Doc. 05–13734 Filed 7–12–05; 8:45 am]

BILLING CODE 4163–18–P

DEPARTMENT OF HEALTH AND HUMAN SERVICES

Administration for Children and Families

Proposed Information Collection Activity; Comment Request; Proposed Projects: Supporting Healthy Marriage (SHM) Project Baseline Data Collection

OMB No.: New collection.

Description: The Administration for Children and Families (ACF), U.S. Department of Health and Human Services (HHS), has launched a new demonstration and evaluation called the Supporting Healthy Marriage (SHM) Project. The first large-scale, multi-site, multi-year, rigorous test of marriage skills programs for low-income married couples, the project is motivated by research that indicates that married adults, and children raised by their married parents, do better on a host of outcomes. Supporting Healthy Marriage is designed to inform program operators and policymakers of the most effective ways to help couples strengthen and maintain healthy marriages. In particular, the project will measure the effectiveness of programs that provide instruction and support to improve relationship skills.

This collection is a baseline survey of study participants. The baseline data collection will serve several key functions in the SHM study. It will help describe the population being served, which will be useful to the programs being studied, to other marriage education program providers, and to policy makers who seek to understand the characteristics of couples that are interested in marriage education services. It will allow the SHM team to define and conduct analyses of key sub-groups, addressing the key study question of who benefits most and least from marriage education services. A baseline data collection will also allow the research team to conduct analyses using pre- and post-intervention measures. Lastly, the baseline data collection is an opportunity to collect participant contact information, to check the validity of random assignment, to assess the quality of survey data and attrition, and to increase the precision of estimated impacts.

Respondents: The target population of the SHM study is low-income married couples with children. Both members of the couple must be over 18 and both must volunteer to participate in the program. The respondents for the Supporting Healthy Marriage Project Baseline Data Collection will be participants in the SHM study. This will include both those receiving SHM program services and those in the SHM study control group. The respondents will be both spouses of 1,000 low-income married couples (2,000 respondents) in each of up to eight demonstration sites. The total number of respondents could be up to 16,000. The study team will conduct participant intake over the course of two years, thus yielding about 8,000 respondents per year.

ANNUAL BURDEN ESTIMATES

Instrument	Number of respondents	Number of responses per respondent (min)	Average burden hours per response (min)	Total burden hours
Eligibility Checklist	8,000	1	5	667
Informed Consent Form	8,000	1	10	1,333
Baseline Information Form	8,000	1	10	1,333
Self-Administered Questionnaire	8,000	1	15	2,000
Contact Information Form	8,000	1	10	1,333
Estimated Total Annual Burden Hours:			50	6,666

In compliance with the requirements of Section 3506(c)(2)(A) of the Paperwork Reduction Act of 1995, the Administration for Children and Families is soliciting public comment on the specific aspects of the information collection described above. Copies of the proposed collection of information can be obtained and comments may be forwarded by writing to the Administration for Children and Families, Office of Administration, Office of Information Services, 370 L'Enfant Promenade, SW., Washington, DC 20447, Attn: ACF Reports Clearance Officer. E-mail address: *grjohnson@acf.hhs.gov.*/ All requests should be identified by the title of the information collection.

The Department specifically requests comments on: (a) Whether the proposed collection of information is necessary for the proper performance of the functions of the agency, including whether the information shall have practical utility; (b) the accuracy of the agency's estimate of the burden of the proposed collection of information; (c) the quality, utility, and clarity of the information to be collected; and (d) ways to minimize the burden of the collection of information on respondents, including through the use of automated collection techniques or other forms of information technology. Consideration will be given to comments and suggestions submitted within 60 days of this publication.

Dated: July 7, 2005.

Robert Sargis,

Reports Clearance Officer.

[FR Doc. 05–13713 Filed 7–12–05; 8:45 am]

BILLING CODE 4184–07–M

DEPARTMENT OF HEALTH AND HUMAN SERVICES

Administration for Children and Families

Submission for OMB Review, Comment Request; State- and Local-Level Questionnaire for Project on Collection of Marriage and Divorce Statistics at the National, State and Local Levels

OMB No.: New Collection.

Description: The Administration for Children and Families and the Office of the Assistant Secretary for Planning and Evaluation in the Department of Health and Human Services propose a study to explore options for the collection of marriage and divorce statistics at the national, state and local levels. The project will include the administering of a questionnaire to state- and local-level officials involved in the reporting and compilation of marriage and divorce vital records.

Respondents: State and local governments, including court officials.

Annual Burden Estimates:

Instrument	No. of respondents	No. of responses per respondent	Average burden hours per response	Total burden hours
Marriage/Divorce Vital Statistics Data Systems State-level Survey	50	1	1.17	58.50
Marriage/Divorce Vital Statistics Data Systems Local-Level Survey	195	1	0.92	179.40

Estimated Total Annual Burden Hours: 237.90.

Additional Information: Copies of the proposed collection may be obtained by writing to the Administration for Children and Families, Office of Administration, Office of Information Services, 370 L'Enfant Promenade, SW., Washington, DC 20447, Attn: ACF Reports Clearance Officer. All requests should be identified by the title of the information collection. E-mail address: *grjohnson@acf.hhs.gov.*

OMB Comment: OMB is required to make a decision concerning the collection of information between 30 and 60 days after publication of this document in the **Federal Register**. Therefore, a comment is best assured of having its full effect if OMB receives it within 30 days of publication. Written comments and recommendations for the proposed information collection should be sent directly to the following: Office of Management and Budget, Paperwork Reduction Project, Attn: Desk Officer for ACF, E-mail address: *Katherine&_T.&_Astrich@omb.eop.gov.*

Dated: July 7, 2005.

Robert Sargis,

Reports Clearance Officer.

[FR Doc. 05–13736 Filed 7–12–05; 8:45 am]

BILLING CODE 4184–01–M

DEPARTMENT OF HEALTH AND HUMAN SERVICES

Administration for Children and Families

Notice of Correction to Availability of Funds for the Projects To Establish Public Assistance Reporting Information System (PARIS) State Partnership Grants

AGENCY: Administration for Children and Families, ACF, DHHS.

Funding Opportunity Title: Public Assistance Reporting Information System (PARIS) State Partnership Grants.

ACTION: Notice of correction.

Funding Opportunity Number: HHS–2005–ACF–OA–TA–0017.

SUMMARY: This notice is to inform interested parties of changes made to the Funding Opportunity for Projects to Establish Public Assistance Reporting Information System (PARIS) State Partnership Grants published on Monday, April 25, 2005, with a due date for applications of June 24, 2005, which is now extended until August 8, 2005.

1. The following changes are made to Section I, ''Funding Opportunity Description'':

a. There will be separate grants awarded to each Member and Partner State, such that a Member State will no longer have fiduciary responsibility for its Partner State [page 21222];

b. The following paragraph is struck: ''After evaluation of all grant applications, and if chosen for an award, the Member state will be awarded a grant under which it will act as a fiduciary agent to the Partner state. The Member state will be responsible for all funding that is provided to its Partner state and will reimburse funding provided hereunder, as costs are incurred, for specific items delineated in its approved grant application budget and in accordance with HHS fiscal and grants management requirements.'' [page 21222]

and replaced with: ''Separate applications for a partnership agreement must be submitted by both the Member State and the Partner State with separate budget requests. An application from a Partner State must identify its Member State and an application from a Member State must identify its Partner State. As costs are incurred for specific items delineated in the approved grant application budgets, States must adhere to HHS fiscal and grants management requirements.'';

c. The phrase ''Member State'' is struck and replaced with ''State'' in the paragraph that reads: ''This list is meant to be illustrative, not exhaustive of the type of issues the Member state should address when preparing the application.'' [page 21222];

2. The following changes are made to Section I, ''Funding Opportunity Description,'' under the ''parameters'' list [page 21222]:

a. In the first sentence in paragraph (3), the phrase ''the Member State'' is replaced with ''each applicant'' so that the sentence reads, ''Each applicant must provide a proposed budget that includes the resources and associated costs it believes are necessary to participate in the match process.'' The second sentence is revised to read: ''The proposed budgets will be evaluated for adequacy, reasonableness, and to ensure that implementation of the partnership will be both operationally effective and successful'';

b. The language in paragraph (5) is struck and replaced with: ''For Member States to be eligible for this funding opportunity they must have participated in at least two of the last six PARIS matches from (February 2004 through May 2005)'';

c. The language in paragraph (6) is struck and replaced with: ''Applicants are cautioned that the ceiling for each grant award is $200,000 for a Partner State and $100,000 for a Member State. Applications exceeding the $200,000/$100,000 threshold will be considered non-responsive and will not be eligible for funding under this announcement'';

d. The first sentence in paragraph (7) is struck and replaced with: ''Two applications must be submitted for each identified partnership—One from a Member State and one from a Partner State.'';

e. The language in paragraph (8) is struck and replaced with: ''The Partner State must enroll in the PARIS Project and provide a copy of the PARIS agreement to ACF prior to the grant award issuance in order to document the Partner State's consent to the project. The following link shows the PARIS Agreement: *http://www.acf.hhs.gov/nhsitrc/paris/agree_par.html* '';

f. The language in paragraph (10) is struck and replaced with: ''Besides the Interstate and Veterans matches, States are encouraged to participate in any additional matches available, such as the Federal match.'';

3. The following changes are made to Section II, ''Award Information'': The ''Ceiling on the Amount of Individual Awards Per Project Period'' and the ''Average Projected Award Amount Per Project Period'' are revised as follows: ''$200,000 for a Partner State and $100,000 for a Member State'' [page 21223];

4. The following changes are made to Section III.1, ''Eligibility Information, Additional Information on Eligibility'' [page 21223]:

a. The first sentence is struck and replaced with, ''In the context of this grant announcement, eligible applicants include both Member States of PARIS and proposed Partner States as defined in Section I, ''Funding Opportunity Description.'' To be considered an eligible Member State, the State must have participated in at least two of the last six quarterly matches from February 2004 through May 2005.'';

b. The sentence reading: ''The following States meet this eligibility factor'' now includes Oregon in the list of eligible Member States;

c. The sentence that reads ''* * * and only these Member States may submit applications under this grant'' is struck and replaced with ''only these eligible Member States may qualify to submit applications under this grant announcement as Member States defined in this grant announcement.'';

d. The sentence reading, ''The application must include the Partnership agreement as well as the appropriate signed PARIS agreement for the Partner State,'' is struck and replaced with: ''The application need only identify the other State in the Partnership in lieu of attaching the actual agreement; however, a signed PARIS agreement and Partnership agreement must both be provided to ACF prior to the grant award issuance.''

5. The following changes are made to Section III (3), ''Eligibility Information, Other, Disqualification Factors'' [page 21223]:

a. The sentence stating, ''Applications that are not submitted by a Member state,'' is struck and replaced with: ''Applications that are not submitted by a State.'' ;

b. The following sentence is struck: ''Applications that fail to include a written Partnership agreement between the Member state and Partner state.'';

c. The following sentence is struck: ''Applications that fail to provide a signed PARIS agreement by the Partner state.'';

d. In the sentence that reads, ''Applications that fail to specify at least two of the last six quarterly PARIS matches from November 2003 through February 2005 in which the Member state has participated,'' the dates are struck and replaced with ''February 2004'' and ''May 2005'' respectively.

6. The following changes are made to IV.2, ''Application and Submission Information, Content and Form of Application Submission'':

a. The sentence, ''Applications must contain a partnership agreement from the Partner State indicating its agreement to team with the Member State for purposes of this grant'' is struck and replaced with: ''Applications should identify what other State, be they a Member State or a Partner State, they are teaming with. The teaming or partnership agreement must be submitted to ACF prior to grant award issuance.'' [page 21223];

b. The sentence, ''Note that the application requires proof of an agreement between the PARIS Member State and its Partner State as well as a signed PARIS agreement (available on the PARIS website)'' is struck and replaced with: ''The proof of agreement between the PARIS Member State and its Partner State, as well as a signed PARIS agreement (available on the PARIS website), must both be submitted to ACF prior to grant award issuance.'' [page 21224];

7. The following changes are made to Section IV. 3, ''Submission Dates and Times, Due Date for Applications'': The due date for applications is extended from June 24, 2005 to August 8, 2005. [page 21224];

8. The following changes are made to Section IV.3, the ''Checklist'': Under the ''When to Submit'' column, the language for the PARIS Agreement and Partnership Agreement is replaced with, ''By date of award.'' [page 21225];

9. The following changes are made to Section V, ''Application Review Information, Evaluation Criteria'' [page 21228]:

a. The paragraph under the criterion ''Approach'' is struck and replaced with: ''Applications will be evaluated in terms of the extent to which they include a plan that (1) reflects the understanding of the characteristics, needs and services that are available from the PARIS Project and the potential for a Partnership agreement achieving the provision of services that directly address the fulfillment of the PARIS Project; (2) is appropriate and feasible; (3) can be reliably evaluated; (4) if successfully implemented, can be sustained after Federal funding has ceased.'';

b. The point value for the criterion ''Budget and Budget Justification'' is revised from 10 points to 15 points;

c. The entire criterion ''Third-Party Agreements'' worth 5 points is struck.

10. The second full paragraph in Section V(2), ''Review and Selection Process'' is revised to read: ''If an insufficient number of acceptable applications, as determined by ACF, are received under this program announcement ACF has the option of negotiating and awarding grant amounts higher than the $200,000 award ceiling for Partner States and $100,000 award ceiling for Member States, set forth in this announcement among those applicants who have submitted acceptable applications.''

Dated: July 8, 2005.

Curtis L. Coy,

Director, Office of Administration.

[FR Doc. 05–13773 Filed 7–12–05; 8:45 am]

BILLING CODE 4184–01–P

DEPARTMENT OF HEALTH AND HUMAN SERVICES

Food and Drug Administration

[FDA 225–05–2001]

Memorandum of Understanding on Environmental Contaminants in Fish and Shellfish, Between the United States Food and Drug Administration, Center for Food Safety and Applied Nutrition and the United States Environmental Protection Agency, Office of Water

AGENCY: Food and Drug Administration, HHS.

ACTION: Notice.

SUMMARY: The Food and Drug Administration (FDA) is providing notice of a memorandum of understanding (MOU) between FDA's Center for Food Safety and Applied Nutrition (CFSAN) and the U.S. Environmental Protection Agency (EPA), Office of Water (OW). The purpose of this MOU is to establish a greater collaboration between CFSAN and OW regarding environmental contaminants in fish and shellfish and the safety of fish and shellfish for consumption by U.S. consumers.

DATES: The agreement became effective June 8, 2005.

FOR FURTHER INFORMATION CONTACT: *For CFSAN*: Karen Carson, Center for Food Safety and Applied Nutrition (HFS–022), Food and Drug Administration, 5100 Paint Branch Pkwy., College Park, MD 20740, 301–436–1664, e-mail: *Karen.Carson@cfsan.fda.gov*.

For EPA: Jeffrey D. Bigler, National Fish and Wildlife Contamination Program, USEPA–4305T, 1200 Pennsylvania Ave., NW., Washington, DC 20460, 202–566–0389, FAX: 202–566–0409, e-mail: *bigler.jeff@epa.gov*.

SUPPLEMENTARY INFORMATION: In accordance with 21 CFR 20.108(c), which states that all written agreements and MOUs between FDA and others shall be published in the **Federal Register**, the agency is publishing notice of this MOU.

Dated: July 6, 2005.

Jeffrey Shuren,

Assistant Commissioner for Policy.

BILLING CODE 4160–01–S

225-05-2001

U.S. Department of Health and Human Services
U.S. Environmental Protection Agency

MEMORANDUM OF UNDERSTANDING ON ENVIRONMENTAL CONTAMINANTS IN FISH AND SHELLFISH BETWEEN THE U.S. FOOD AND DRUG ADMINISTRATION CENTER FOR FOOD SAFETY AND APPLIED NUTRITION AND THE U.S. ENVIRONMENTAL PROTECTION AGENCY OFFICE OF WATER
June 1, 2005

Purpose: To establish a greater collaboration between the U.S. Food and Drug Administration's Center for Food Safety and Applied Nutrition (FDA/CFSAN), and the U.S. Environmental Protection Agency's Office of Water (EPA/OW) regarding the activities intended to address: 1) environmental contaminants in fish and shellfish and 2) the safety of fish and shellfish for consumption by U.S. consumers. FDA/CFSAN and EPA/OW commit to work closely with each other to coordinate, in advance of action, activities that are of mutual interestwith regard to: 1) environmental contaminants in fish and shellfish and 2) the safety of fish and shellfish for consumption by U.S. consumers. This MOU will provide a mechanism for this coordination and collaboration.

Missions: One of the missions of the FDA is to promote and protect the public's health by ensuring that the nation's food supply, including commercial fish and shellfish, is safe, sanitary, wholesome, and properly labeled. The EPA's mission is to protect human health and the environment. To help achieve this mission, the EPA Office of Water's goals are to restore and maintain water quality, to protect human health and ecosystems, and to provide the public with information on how best to reduce their water-related risks, including risks pertaining to the consumption of noncommercial fish and shellfish.

Goals and Objectives: FDA/CFSAN and EPA/OW acknowledge our responsibilities to serve as leaders in promoting and protecting public health while carrying out our agencies' missions. Close cooperation, collaboration, and interaction between the two agencies will help ensure a more unified U.S. Government message regarding the risks and benefits of consuming commercial and noncommercial fish and shellfish that will be clear and beneficial to people in the U.S. Goals and objectives associated with this partnership will be achieved by:

- Promoting the use of the best available science and public health policies;
- Promoting the sharing and availability of appropriate information among the agencies' health and environmental professionals and the public;
- Encouraging environmental monitoring efforts by FDA/CFSAN and EPA/OW and stakeholders;

- Encouraging the development of public health advice that considers both risks and benefits of consumption of commercial and noncommercial fish and shellfish; and
- Promoting uniformity where appropriate in public health messages regarding consumption of commercial and noncommercial fish and shellfish.

Scope: This agreement builds upon collaborative efforts already underway within and between FDA/CFSAN and EPA/OW. FDA/CFSAN and EPA/OW will strive to incorporate the above goals and objectives that are results oriented and, when appropriate, involve interested stakeholders. This MOU establishes a mechanism for cooperation and coordination of public health issues associated with commercial and noncommercial fish and shellfish.

Interagency Communications: FDA/CFSAN and EPA/OW will establish a framework for coordination and communication pertaining to this MOU and to promote staff exchange, as appropriate, for improved interagency communications. EPA/OW and FDA/CFSAN will each identify a representative to serve as its central point of contact on matters relating to this MOU. The representative will participate in regular meetings to facilitate this MOU, coordinate research, and avoid unnecessary duplication in order to increase efficiency. These points of contact will be used to provide input on FDA/CFSAN and EPA/OW matters regarding contaminants in fish and shellfish, when such matters are of mutual interest. In addition, FDA/CFSAN and EPA/OW will promote staff exchange, as appropriate, for improved interagency communications. Finally, FDA/CFSAN and EPA/OW will develop, within 90 days of signing this MOU and annually thereafter, a joint annual plan that describes planned collaborative activities for the subsequent 12-month period.

Qualifications and Limitations: This MOU is neither a fiscal nor a funds obligation document, nor does it supplement either EPA's or FDA's existing statutory authorities. All commitments under this MOU made by EPA/OW and FDA/CFSAN are subject to the availability of appropriations. Nothing in this MOU, in and of itself, obligates FDA/CFSAN or EPA/OW to expend appropriations or to enter into any contract, assistance agreement, interagency agreement, or other financial obligations. Any endeavor involving reimbursement or contribution of funds between the parties to this MOU or the sharing of non-public information will be set forth in an Interagency Agreement (IAG) or other appropriate agreement entered into under applicable statutes, regulations and policies. The activities, initiatives, or pilot projects contemplated in this MOU will be carried out in accordance with the existing statutory authorities and nothing in this MOU will, in any way, alter the specific statutory or regulatory authorities, rights, requirements, or responsibilities assigned to the FDA/CFSAN, EPA/OW, or other agencies.

This MOU does not create any rights or benefits for any third parties, substantive or procedural, enforceable by law or equity against FDA/CFSAN or EPA/OW, their officers or employees, or any other person. This MOU does not direct or apply to any person outside FDA/CFSAN and EPA/OW. Neither FDA/CFSAN nor EPA/OW may endorse

the purchase or sale of products and services provided by specific commercial entities as part of this effort.

Authority: For EPA: Clean Water Act Section 104, NEPA Section 102(2)(G), For FDA: Federal Food, Drug, and Cosmetic Act, 21 U.S.C. § 393.

Period of Agreement: This MOU will become effective when approved by the indicated signatories for the U.S. Food and Drug Administration's Center for Food Safety and Applied Nutrition and the U.S. Environmental Protection Agency's Office of Water and will continue in effect for five years. Either party may terminate this MOU by providing written notice to the other party. The termination will be effective upon the sixtieth calendar day following notice, unless a later date is set forth. The parties agree to evaluate the MOU at least once in the five-year period of the MOU at which time the parties may agree to continue, modify, or cancel the MOU.

BENJAMIN H. GRUMBLES
Assistant Administrator for Water

U.S. Environmental Protection Agency

6/8/05
Date

ROBERT E. BRACKETT, Ph D.
Director, Center for Food Safety
and Applied Nutrition
U.S. Food and Drug Administration

6/3/05
Date

[FR Doc. 05–13707 Filed 7–12–05; 8:45 am]
BILLING CODE 4160–01–C

DEPARTMENT OF HEALTH AND HUMAN SERVICES

Food and Drug Administration

[FDA 225–03–8004]

Memorandum of Understanding Between the Food and Drug Administration and the Food and Drug Administration Alumni Association, Inc.

AGENCY: Food and Drug Administration, HHS.

ACTION: Notice.

SUMMARY: The Food and Drug Administration (FDA) is providing notice of a memorandum of understanding (MOU) between the Food and Drug Administration and the Food and Drug Administration Alumni Association, Inc., (FDAAA). FDA and FDAAA agree to partner on future specific undertakings that are considered beneficial to both organizations, are directly related to the mission of FDA, and are within FDA's statutory authorities.

DATES: The agreement became effective March 3, 2003.

FOR FURTHER INFORMATION CONTACT: Mary Hitch, Office of External Affairs (HF–10), Food and Drug Administration, 5600 Fishers Lane, Rockville, MD 20857, 301–827–4406, e-mail: *Mary.Hitch@fda.gov.*

SUPPLEMENTARY INFORMATION: In accordance with 21 CFR 20.108(c), which states that all written agreements and MOUs between FDA and others shall be published in the **Federal Register**, the agency is publishing notice of this MOU.

Dated: June 30, 2005.

Jeffrey Shuren,

Assistant Commissioner for Policy.

BILLING CODE 4160–01–S

DEPARTMENT OF HEALTH & HUMAN SERVICES

Food and Drug Administration
Rockville MD 20857

March 3, 2003

Mr. John C. Villforth
Chairman, Board of Directors
Food and Drug Administration Alumni Association, Inc.
7200 Wapello Drive
Derwood, Maryland 20855

Dear Mr. Villforth:

I am very pleased that FDA and the Food and Drug Administration Alumni Association, Inc. (FDAAA) have entered into a Memorandum of Understanding (MOU) (copy enclosed). The MOU describes in general how we will work together in the future. I understand we will be pursuing specific partnering activities and to facilitate this, I have asked Dr. Lester M. Crawford to serve as FDA's contact. I also understand the FDAAA has already identified several activities, some of which may be covered by possible future agreements between FDA and the Association. These include:

- assisting in education and promotion of FDA's consumer protection and public health mission among the public and Agency stakeholders;
- providing advice and assistance to FDA in planning and implementing the Agency's centennial observance in 2006; and
- identifying alumni and their specific experience and expertise through creation of a new database.

My FDA colleagues and I look forward to a long and beneficial partnership.

Sincerely,

Mark B. McClellan, M.D., Ph.D.
Commissioner of Food and Drugs

This agreement may be terminated by either party by providing the other party with 5 working days' advance written notice of such termination.

Signatures

Accepted for the FDA

Mark B. McClellan, M.D., Ph.D.
Commissioner of Food and Drugs

3/3/03
Date

Accepted for the FDAAA

John C. Villforth
Chairman, Board of Directors
Food and Drug Administration
Alumni Association, Inc.

March 3, 2003
Date

DEPARTMENT OF HEALTH & HUMAN SERVICES

Food and Drug Administration
Rockville MD 20857

225-03-8004

Memorandum of Understanding

This Memorandum is for the purpose of documenting an understanding between the Food and Drug Administration (FDA), Department of Health and Human Services (DHHS), and the Food and Drug Administration Alumni Association, Inc. (FDAAA). FDA and FDAAA agree to partner on future specific undertakings that are considered beneficial to both organizations, are directly related to the mission of FDA, and are within FDA's statutory authorities.

The FDAAA is a non-profit educational public service organization of former (voting) and current FDA (non-voting)[1] employees, incorporated in the state of Maryland for the purposes of providing education and professional development regarding public health, sponsoring humanitarian outreach programs entailing training and technical assistance, and promoting public education concerning public health. It is understood by the parties that the FDAAA does not engage in lobbying activities at the Federal, State or local level.

It is understood that FDA and FDAAA may work together on selected activities and efforts. FDA and FDAAA will formalize such activities in specific agreements. FDA will use appropriate legal mechanisms to enter into such agreements. Such agreements will be based on current authorities, which could include the Federal Acquisition Regulation and the Grants, and Cooperative Agreements Act of 1977, Chapter 63 of Title 31 of the United States Code, entitled Using Procurement Contracts and Grants and Cooperative Agreements, 31 U.S.C. § 6301-6308. To the extent that FDA will be getting advice and recommendations from either FDAAA or its members, such will be done consistent with the Federal Advisory Committee Act, 5 USC Appendix II. For any collaborative research projects, the parties may decide to enter into a Cooperative Research and Development Agreement (CRADA) under 15 U.S.C. § 3710a, "Cooperative Research and Development Agreements." Under Title 42, United States Code, 209(f), the FDA may employ individuals as Experts and Consultants in scientific occupations with or without compensation. Under the terms of such agreements, FDAAA and FDA may collaborate using the experience and training of alumni that are of value to FDA in accomplishing its public health mission. It is also understood that such agreements must be within the scope of FDA's appropriations, authorities, and governing regulations.

With the concurrence of their supervisors, FDA employees may participate in meetings and activities related to this partnership and may work with FDAAA on collaborative efforts that are part of their official duties and are within the scope of the FDA mission.

1 Current FDA employees may request membership in FDAAA as Associate Members; as such, they are non-voting members and have no governance responsibilities in the organization.

[FR Doc. 05–13765 Filed 7–12–05; 8:45 am]
BILLING CODE 4160–01–C

DEPARTMENT OF HEALTH AND HUMAN SERVICES

Food and Drug Administration

[FDA 225–04–4005]

Memorandum of Understanding Between the Food and Drug Administration and the State of Illinois, Emergency Management Agency, Bureau of Radiation Safety

AGENCY: Food and Drug Administration, HHS.

ACTION: Notice.

SUMMARY: The Food and Drug Administration (FDA) is providing notice of a memorandum of understanding (MOU) between the Food and Drug Administration and the State of Illinois, through the Illinois Emergency Management Agency, to continue to conduct a State as certifiers program in Illinois under the Mammography Quality Standards Act as amended by the Mammography Quality Standards Reauthorization Act of 1998.

DATES: The agreement became effective August 18, 2004.

FOR FURTHER INFORMATION CONTACT: Joanne Choy, Center for Devices and Radiological Health (HFZ–240), Food and Drug Administration, 1350 Piccard Dr., Rockville, MD 20850, 301–827–2963.

SUPPLEMENTARY INFORMATION: In accordance with 21 CFR 20.108(c), which states that all written agreements and MOUs between FDA and others shall be published in the **Federal Register**, the agency is publishing notice of this MOU.

Dated: June 30, 2005.

Jeffrey Shuren,

Assistant Commissioner for Policy.

BILLING CODE 4160–01–S

Control No. 225-04-4005

MEMORANDUM OF UNDERSTANDING

BETWEEN

THE STATE OF ILLINOIS

EMERGENCY MANAGEMENT AGENCY
BUREAU OF RADIATION SAFETY

AND

U.S. FOOD AND DRUG ADMINISTRATION
CENTER FOR DEVICES AND RADIOLOGICAL HEALTH
OFFICE OF COMMUNICATION, EDUCATION, AND RADIATION PROGRAMS

I. **PURPOSE**:

The purpose of this Memorandum of Understanding (MOU) is to authorize the State of Illinois, through the Illinois Emergency Management Agency (Agency), to continue to conduct a State as certifiers (SAC) program in Illinois under the Mammography Quality Standards Act (MQSA) (42U.S.C.263b) as amended by the Mammography Quality Standards Reauthorization Act of 1998 (MQSRA). Through this MOU, the United States Food and Drug Administration (FDA) authorizes the Agency to enforce MQSA certification standards as approved by the FDA, to issue certificates to mammography facilities, to perform inspection of mammography facilities, and to take enforcement action against facilities that violate MQSA to ensure safe, reliable, and accurate mammography in Illinois.

II. **BACKGROUND**:

The MQSA (Pub. L. 102-539) was enacted on October 27, 1992, to establish national quality standards for mammography. Subsection 354(q) of the MQSA gives the Secretary of Health and Human Services (Secretary) the power to authorize State programs to carry out certain MQSA certification program requirements. The Secretary has delegated his authority under subsection 354(q) to FDA. FDA developed a States as Certifiers Demonstration Project (Project) to allow a limited trial of State Programs under subsection 354(q) of the MQSA. The State of Illinois applied to participate in the Project and was approved by FDA on August 3, 1998. The State's participation in the Project was subsequently renewed, through an MOU, on November 3, 1999. The State of Illinois requested FDA's approval to continue to serve as a certifying state agency after the completion of the Demonstration Project. FDA has approved the State's request and authorizes, through this MOU, the State of Illinois to continue to serve in its capacity as a certifying State.

III. SUBSTANCE OF AGREEMENT:

1. FDA hereby reauthorizes the State of Illinois, through the Agency, to carry out the certification requirements of subsections 354(b), (c), (d), (g)(1), (h), (i), and (j) of the MQSA (including the requirements under regulations promulgated pursuant to such subsections). This reauthorization applies to facilities within the Agency's jurisdiction.

2. FDA shall continue to carry out subsections 354(e) and (f), may take action under subsections 354(h), (i), and (j) and shall conduct oversight functions under subsections 354(g)(2) and (g)(3) of the MQSA.

3. The State of Illinois shall, in addition, comply with the standards for certification agencies at 21CFR 900.22 and 900.25(b) including but not limited to, the requirements for establishing processes for the following activities:

   - certification and inspection of mammography facilities by MQSA-qualified inspector;
   - appropriate criteria and processes for the suspension and revocation of certificates;
   - prompt investigation of and appropriate enforcement action for facilities performing mammography without certificates, as well as other violations of MQSA;
   - appeals by facilities regarding inspectional findings, enforcement actions, and adverse certification decisions or adverse accreditation decisions after exhausting appeals to their accreditation body;
   - additional mammography review of facilities when the State believes that mammography quality at a facility has been compromised and may present a serious risk to human health;
   - patient and physician notification by the facility when additional mammography review shows that the quality of mammography performed was so inconsistent with established quality standards so as to present a significant risk to human health;
   - timely and accurate electronic transmission of inspection, certification, and compliance data in a format and timeframe determined by FDA;
   - authorization by FDA of changes the State proposes to make to any standard that FDA previously has accepted under 21 CFR 900.21.

4. By October 1st, the beginning of FDA's fiscal year, the State of Illinois shall provide to FDA its plan for inspecting all of the facilities under its jurisdiction during the coming year. At the beginning of each quarter, the State shall provide an update to FDA describing any changes in its annual plan that occurred in the last quarter or are planned for the coming quarter. (Quarters will be calculated on a fiscal rather than calendar year basis, beginning in October and continuing through September of the following year).

5. The State of Illinois will electronically transmit the dates of inspections, and the results of all MQSA facility inspections conducted by the State within 5 business days after conducting the inspection by uploading these data to the MQSA Mammography Program Reporting and Information System (MPRIS) facility inspection data application (FISS).

6. The FDA will bill and charge each inspected mammography facility a fee, in accordance with 42 USC 263b(r)(1), of $509 to cover the FDA's cost for support of the inspections. This fee may be subject to change by FDA. The types of services that will be provided by the FDA are as follows:

   - Training and qualifying inspectors.
   - Billing facilities for the FDA portion of the fees due for annual inspections.
   - Collecting the FDA portion of the facility payments.
   - Developing instrument calibration procedures and calibrating instruments used in the inspections.
   - Supplying, repairing, and replacing inspection equipment.
   - Designing, programming, and maintaining inspection data systems.
   - Administering attributable support to facility inspections.

7. Facilities that qualify as governmental entities (GE) will not be subject to the payment of FDA inspection fees.

8. By the end of each quarter, the State of Illinois shall electronically update and maintain facility noncompliance information via the MPRIS facility compliance tracking data application (FaNTMS) to reflect status and resolution of inspectional findings. Quarters will begin in October and continue through September of the following year

9. The State of Illinois will, in accordance with 21 CFR 900.23, provide all information as specified by FDA as part of FDA's responsibilities, including keeping FDA's SAC liaison informed of compliance actions as they occur and through resolution (e.g., AMR, PPN, Injunctions, Cease and Desist Order, Suspension, or Revocation).

10. The State of Illinois will provide FDA with updates and revisions to its policies and procedures previously approved by FDA, as appropriate.

11. In the event FDA determines, through its oversight activities under 21 CFR 900.23, or through other means, that the State of Illinois is no longer in substantial compliance with its certification program responsibilities, FDA may take action in accordance with 21 CFR 900.24.

12. FDA will provide to the State of Illinois, under 21 CFR 900.25(a), the opportunity to appeal final actions taken by FDA regarding its approval or withdrawal of approval of the certification body.

13. FDA will provide the State of Illinois with access to the FDA MQSA database (MPRIS).

IV. NAMES AND ADDRESSES OF PARTICIPATING AGENCIES:

State of Illinois:
Illinois Emergency Management Agency
110 East Adams Street
Springfield, IL 62701

FDA:
Office of Communication, Education, and Radiation Programs
1350 Piccard Drive
Rockville, MD 20850

V. LIAISON OFFICERS:

For matters and notices related to this MOU:

A. The contact person for the Agency is:

Marilyn Haycraft
Mammography Certification Program
Division of Nuclear Safety
Illinois Emergency Management Agency
1035 Outer Park Drive
Springfield, Illinois 62704
Phone: (217) 785-9923
FAX: (217) 785-9946
E-mail address: Haycraft@iema.state.il.us

B. The contact person for FDA is:

Joanne Choy
Food and Drug Administration, HFZ-240
Division of Mammography Quality and Radiation Programs
1350 Piccard Drive
Rockville, MD 20850
Phone: (301) 827-2963
FAX: (301) 594-3306
E-mail address: jkc@cdrh.fda.gov

Either party may designate in writing different contact persons or addresses.

VI. **PERIOD OF AGREEMENT**:

This MOU will become effective on the date or as of the acceptance by both parties and will continue until termination in writing by either party with a 30-day prior notice (such notice shall be sent to the addresses listed in Section V.) This MOU may be modified by mutual written consent at any time. The MOU will be formally reviewed by the FDA every seven years, and updated or modified as appropriate.

APPROVED AND ACCEPTED FOR THE STATE OF ILLINOIS

(Signature and date) 8/3/04

William C. Burke
Director
Illinois Emergency Management Agency
State of Illinois

APPROVED AND ACCEPTED FOR THE FOOD AND DRUG ADMINISTRATION

8/18/04

(Signature and date)

Lynne L. Rice
Director
Office of Communication, Education, and Radiation Programs
Center for Devices and Radiological Health
Food and Drug Administration

[FR Doc. 05–13706 Filed 7–12–05; 8:45 am]
BILLING CODE 4160–01–C

DEPARTMENT OF HEALTH AND HUMAN SERVICES

National Institutes of Health

Prospective Grant of Exclusive License: Mesothelin, a Differentiation Antigen Present on Mesothelium, Mesotheliomas and Ovarian Cancers and Methods and Kits for Targeting

AGENCY: National Institutes of Health, Public Health Service, HHS.

ACTION: Notice.

SUMMARY: This notice, in accordance with 35 U.S.C. 209(c)(1) and 37 CFR part 404.7(a)(1)(i), that the National Institutes of Health, Department of Health and Human Services, is contemplating the grant of an exclusive patent license to practice the inventions embodied in U.S. Patent Application No. 60/010,166, filed January 5, 1996, entitled ''Mesothelin, A Differentiation Antigen Present On Mesothelium, Mesotheliomas And Ovarian Cancers And Methods And Kits For Targeting'' [E–002–1996/0–US–01]; United States Patent No. 6,153,430, issued on November 28, 2000, entitled ''Nucleic Acid Encoding Mesothelin, A Differentiation Antigen Present On Mesothelium, Mesotheliomas And Ovarian Cancers'' [E–002–1996/0–US–02]; United States Patent Application No. 09/684,599, filed October 5, 2000, entitled ''Mesothelin, A Differentiation Antigen Present On Mesothelium, Mesotheliomas And Ovarian Cancers And Methods And Kits For Targeting'' (E–002–1996/0–US–03); United States Patent No. 6,083,502, issued on July 4, 2000, entitled ''Mesothelium Antigen And Methods And Kits For Targeting It'' [E–002–1996/1–US–02]; PCT Application No. PCT/US97/00224, filed January 3, 1997, entitled ''Mesothelium Antigen And Methods And Kits For Targeting It'' [E–002–1996/1–PCT–01]; Australian Patent No. 703769, filed January 3, 1997, entitled ''Mesothelium Antigen And Methods And Kits For Targeting It'' [E–002–1996/1–AU–03]; Canadian Patent No. 2241604, filed January 3, 1997, entitled ''Mesothelium Antigen And Methods And Kits For Targeting It'' [E–002–1996/1–CA–04]; Japanese Patent Application No. 9–525355, filed January 3, 1997, entitled ''Mesothelium Antigen And Methods And Kits For Targeting It'' [E–002–1996/1–JP–06]; European Patent No. 0871492, filed January 3, 1997, entitled ''Mesothelium Antigen And Methods And Kits For Targeting It'' [E–002–1996/1–EP–05]; Switzerland Patent Application No. 0871492, filed January 3, 1997, entitled ''Mesothelium Antigen And Methods And Kits For Targeting It'' [E–002–1996/1–CH–07]; German Patent No. 69726404.1, filed January 3, 1997, entitled ''Mesothelium Antigen And Methods And Kits For Targeting It'' (E–002–1996/1–DE–08); French Patent Application No. 0871492, filed January 3, 1997, entitled ''Mesothelium Antigen And Methods And Kits For Targeting It'' [E–002–1996/1–FR–09]; Italian Patent No. 05503/BE/2004, January 3, 1997, entitled ''Mesothelium Antigen And Methods And Kits For Targeting It'' [E–002–1996/1—T–10]; Spanish Patent No. 0871492, filed January 3, 1997, entitled ''Mesothelium Antigen And Methods And Kits For Targeting It'' [E–002–1996/1–ES–11]; United Kingdom Patent No.

0871492, filed January 3, 1997, entitled ''Mesothelium Antigen And Methods And Kits For Targeting It'' [E–002–1996/1–GB–12]; United States Patent No. 5,320,956, issued June 14, 1996, entitled ''Monoclonal Antibody'' [E–195–1990/0–US–20]; United States Patent No. 5,525,337, issued June 11, 1996, entitled ''Monoclonal Antibody Binding Cell Surface Antigen For Diagnosing Cancer'' [E–195–1990/0–US–21]; United States Patent No. 5,817,313, issued October 6, 1998, entitled ''Monoclonal Antibodies And Conjugates Thereof Useful For The Treatment Of Cancer'' [E–195–1990/0–US–22]; PCT Patent Application No. PCT/US91/07227, filed October 9, 1991, entitled ''Monoclonal Antibody'' [E–195–1990/0–PCT–02]; Denmark Patent No. 0554356, filed October 9, 1991, entitled ''Monoclonal Antibody'' [E–195–1990/0–DK–03]; United Kingdom Patent No. 0554356, filed October 9, 1991, entitled ''Monoclonal Antibody'' [E–195–1990/0–GB–04]; Austrian Patent No. 0554356, filed October 9, 1991, entitled ''Monoclonal Antibody'' [E–195–1990/0–AT–05]; Belgium Patent No. 0554356, filed October 9, 1991, entitled ''Monoclonal Antibody'' [E–195–1990/0–BE–06]; European Patent No. 0554356, filed October 9, 1991, entitled ''Monoclonal Antibody'' [E–195–1990/0–EP–09]; French Patent No. 0554356, filed October 9, 1991, entitled ''Monoclonal Antibody'' [E–195–1990/0–FR–11]; German Patent No. 0554356, filed October 9, 1991, entitled ''Monoclonal Antibody'' [E–195–1990/0–DE–08]; Greece Patent No. 0554356, filed October 9, 1991, entitled ''Monoclonal Antibody'' [E–195–1990/0–GR–12]; Netherlands Patent No. 0554356, filed October 9, 1991, entitled ''Monoclonal Antibody'' [E–195–1990/0–NL–15]; Italian Patent No. 0554356, filed October 9, 1991, entitled ''Monoclonal Antibody'' [E–195–1990/0–IT–13]; Luxembourg Patent No. 0554356, filed October 9, 1991, entitled ''Monoclonal Antibody'' [E–195–1990/0–LU–14]; Spanish Patent No. 0554356, filed October 9, 1991, entitled ''Monoclonal Antibody'' [E–195–1990/0-ES–10]; Sweden Patent No. 0554356, filed October 9, 1991, entitled ''Monoclonal Antibody'' [E–195–1990/0–SE–16]; Switzerland Patent No. 0554356, filed October 9, 1991, entitled ''Monoclonal Antibody'' [E–195–1990/0–CH–07]; Australian Patent No. 648363, filed October 9, 1991, entitled ''Monoclonal Antibody'' [E–195–1990/0–AU–17]; Canadian Patent No. 2093928, filed October 9, 1991, entitled ''Monoclonal Antibody'' [E–195–1990/0–CA–18]; and Japanese Patent No. 2660241, filed October 9, 1991, entitled ''Monoclonal Antibody'' [E–195–1990/0–JP–19] to Morphotek, Inc., which has offices in Exton, Pennsylvania. The patent rights in these inventions have been assigned to the United States of America.

The prospective exclusive license territory may be worldwide, and the field of use may be limited to the use of licensee's MORAb–009 antibody for the treatment of mesothelin-expressing cancer.

DATES: Only written comments and/or applications for a license which are received by the NIH Office of Technology Transfer on or before September 12, 2005 will be considered.

ADDRESSES: Requests for copies of the patent application, inquiries, comments, and other materials relating to the contemplated exclusive license should be directed to: Jesse S. Kindra, J.D., M.S., Technology Licensing Specialist, Office of Technology Transfer, National Institutes of Health, 6011 Executive Boulevard, Suite 325, Rockville, MD 20852–3804; Telephone: (301) 435–5559; Facsimile: (301) 402–0220; E-mail: *kindraj@mail.nih.gov.*

SUPPLEMENTARY INFORMATION: The technology relates to CAK1, or ''mesothelin'', which is an antigen present on the cell surface in mesothelium and on many mesotheliomas and ovarian cancers. While the role of this differentiation antigen has not yet been determined, it is postulated that it may be implicated in adhesion and in the dissemination of mesotheliomas and of ovarian cancers. CAK1, therefore, is a potential target for monoclonal antibodies to be used in the diagnosis and treatment of these cancers. The gene for CAK1 has been cloned and sequenced, as embodied in the current technology. This technology, therefore, should provide a valuable research tool for use in the development of diagnostics and/or therapeutic agents toward mesotheliomas and ovarian cancers.

The prospective exclusive license will be royalty bearing and will comply with the terms and conditions of 35 U.S.C. 209 and 37 CFR 404.7. The prospective exclusive license may be granted unless within sixty (60) days from the date of this published notice, the NIH receives written evidence and argument that establishes that the grant of the license would not be consistent with the requirements of 35 U.S.C. 209 and 37 CFR 404.7.

Applications for a license in the field of use filed in response to this notice will be treated as objections to the grant of the contemplated exclusive license. Comments and objections submitted to this notice will not be made available for public inspection and, to the extent permitted by law, will not be released under the Freedom of Information Act, 5 U.S.C. 552.

Dated: July 1, 2005.

Steven M. Ferguson,

Director, Division of Technology Development and Transfer, Office of Technology Transfer, National Institutes of Health.

[FR Doc. 05–13804 Filed 7–12–05; 8:45 am]

BILLING CODE 4140–01–P

DEPARTMENT OF HEALTH AND HUMAN SERVICES

National Institutes of Health

National Cancer Institute; Notice of Closed Meeting

Pursuant to section 10(d) of the Federal Advisory Committee Act, as amended (5 U.S.C. Appendix 2), notice is hereby given of the following meeting.

The meeting will be closed to the public in accordance with the provisions set forth in sections 552b(c)(4) and 552b(c)(6), Title 5 U.S.C., as amended. The grant applications and the discussions could disclose confidential trade secrets or commercial property such as patentable material, and personal information concerning individuals associated with the grant applications, the disclosure of which would constitute a clearly unwarranted invasion of personal privacy.

Name of Committee: National Cancer Institute Special Emphasis Panel, Centers of Cancer Nanotechnology Excellence (CCNEs).

Date: July 19–22, 2005.

Time: 6 p.m. to 5 p.m.

Agenda: To review and evaluate grant applications.

Place: Holiday Inn Georgetown, 2101 Wisconsin Ave NW., Washington, DC 20007.

Contact Person: Michael B. Small, PhD, Scientific Review Administrator, Research Programs Review Branch, Division of Extramural Activities, National Cancer Institute, National Institutes of Health, 6116 Executive Blvd., Room 8127, Bethesda, MD 20892–8328, 301–402–0996, *smallm@mail.nih.gov.*

This notice is published less than 15 days prior to meeting due to scheduling conflicts.

(Catalogue of Federal Domestic Assistance Program Nos. 93.392, Cancer Construction; 93.393, Cancer Cause and Prevention Research; 93.394, Cancer Detection and Diagnosis Research; 93.395, Cancer Treatment Research; 93.396, Cancer Biology Research; 93.397, Cancer Centers Support; 93.398, Cancer Research Manpower; 93.399, Cancer Control, National Institutes of Health, HHS)

Dated: July 5, 2005.

LaVerne Y. Stringfield,

Director, Office of Federal Advisory Committee Policy.

[FR Doc. 05–13813 Filed 7–12–05; 8:45 am]

BILLING CODE 4140–01–M

DEPARTMENT OF HEALTH AND HUMAN SERVICES

National Institutes of Health

National Cancer Institute; Notice of Closed Meeting

Pursuant to section 10(d) of the Federal Advisory Committee Act, as amended (5 U.S.C. Appendix 2), notice is hereby given of the following meeting.

The meeting will be closed to the public in accordance with the provisions set forth in sections 552b(c)(4) and 552b(c)(6), Title 5 U.S.C., as amended. The contract proposals and the discussions could disclose confidential trade secrets or commercial property such as patentable material, and personal information concerning individuals associated with the contract proposals, the disclosure of which would constitute a clearly unwarranted invasion of personal privacy.

Name of Committee: National Cancer Institute Special Emphasis Panel, Lab Assessment of Tobacco Use Behavior & Exposure Toxins.

Date: August 4, 2005.

Time: 8 a.m. to 4 p.m.

Agenda: To review and evaluate contract proposals.

Place: Holiday Inn Select Bethesda, 8120 Wisconsin Ave, Bethesda, MD 20814.

Contact Person: Joyce C. Pegues, PhD, Scientific Review Administrator, Special Review and Logistics Branch, Division of Extramural Activities, National Cancer Institute, 6116 Executive Blvd. 7149, Bethesda, MD 20892, 301/594–1286, *peguesj@mail.nih.gov.*

(Catalogue of Federal Domestic Assistance Program Nos. 93.392, Cancer Construction; 93.393, Cancer Cause and Prevention Research; 93.394, Cancer Detection and Diagnosis Research; 93.395, Cancer Treatment Research; 93.396, Cancer Biology Research; 93.397, Cancer Centers Support; 93.398, Cancer Research Manpower; 93.399, Cancer Control, National Institutes of Health, HHS)

Dated: July 5, 2005.

LaVerne Y. Stringfield,

Director, Office of Federal Advisory Committee Policy.

[FR Doc. 05–13816 Filed 7–12–05; 8:45 am]

BILLING CODE 4140–01–M

DEPARTMENT OF HEALTH AND HUMAN SERVICES

National Institutes of Health

National Cancer Institute; Notice of Closed Meeting

Pursuant to section 10(d) of the Federal Advisory Committee Act, as amended (5 U.S.C. Appendix 2), notice is hereby given of the following meeting.

The meeting will be closed to the public in accordance with the provisions set forth in sections 552b(c)(4) and 552b(c)(6), Title 5 U.S.C., as amended. The grant applications and the discussions could disclose confidential trade secrets or commercial property such as patentable material, and personal information concerning individuals associated with the grant applications, the disclosure of which would constitute a clearly unwarranted invasion of personal privacy.

Name of Committee: National Cancer Institute Initial Review Group, Subcommittee E—Cancer Epidemiology, Prevention & Control.

Date: August 11–12, 2005.

Time: 8 a.m. to 12 p.m.

Agenda: To review and evaluate grant applications.

Place: Bethesda North Marriott, 5701 Marinelli Road, North Bethesda, MD 20852.

Contact Person: Mary C. Fletcher, PhD, Scientific Review Administrator, Research Programs Review Branch, Division of Extramural Activities, National Cancer Institute, National Institutes of Health, 6116 Executive Boulevard, Rm 8115, Bethesda, MD 20892, (301) 496–7413.

(Catalogue of Federal Domestic Assistance Program Nos. 93.392, Cancer Construction; 93.393, Cancer Cause and Prevention Research; 93.394, Cancer Detection and Diagnosis Research; 93.395, Cancer Treatment Research; 93.396, Cancer Biology Research; 93.397, Cancer Centers Support; 93.398, Cancer Research Manpower; 93.399, Cancer Control, National Institutes of Health, HHS)

Dated: July 5, 2005.

LaVerne Y. Stringfield,

Director, Office of Federal Advisory Committee Policy.

[FR Doc. 05–13817 Filed 7–12–05; 8:45 am]

BILLING CODE 4140–01–M

DEPARTMENT OF HEALTH AND HUMAN SERVICES

National Institutes of Health

National Center on Minority Health and Health Disparities; Notice of Closed Meetings

Pursuant to section10(d) of the Federal Advisory Committee Act, as amended (5 U.S.C. Appendix 2), notice is hereby given of the following meetings.

The meetings will be closed to the public in accordance with the provisions set forth in sections 552(c)(4) and 552b(c)(6), Title 5 U.S.C., as amended. the grant applications and the discussions could disclose confidential trade secrets or commercial property such as patentable material, and personal information concerning individuals associated with the grant applications, the disclosure of which would constitute a clearly unwarranted invasion of personal privacy.

Name of Committee: National Center on Minority Health and Health Disparities Special Emphasis Panel, MCMHD Community-Based Participatory Research & Outreach.

Date: July 18–20, 2005.

Time: 2 p.m. to 5 p.m.

Agenda: To review and evaluate grant applications.

Place: Embassy Suites at the Chevy Chase Pavilion, 4300 Military Road, NW., Washington, DC 20015.

Contact Person: Merlyn M. Rodrigues, PhD, MD, Director, Office of Extramural Activities, National Center On Minority Health, and Health Disparities, National Institute of Health, 6707 Democracy Blvd. Suite 800, Bethesda, MD 20894, (301) 402–1366, *rodrigm1@mail.nih.gov.*

Name of Committee: National Center on Minority Health and Health Disparities Special Emphasis Panel, Project EXPORT—Establishing Exploratory Centers.

Date: July 24–26, 2005.

Time: 5 p.m. to 2 p.m.

Agenda: To review and evaluate grant applications.

Place: Embassy Suites at the Chevy Chase Pavilion, 4300 Military Road, NW., Washington, DC 20015.

Contact Person: Lorrita Watson, PhD, National Center on Minority Health and Health Disparities, National Institutes of Health, 6707 Democracy Blvd., Suite 800, Bethesda, MD 20892–5465, 301–594–7784, *watsonl@ncmhd.nih.gov.*

Dated: June 30, 2005.

LaVerne Y. Stringfield,

Director, Office of Federal Advisory Committee Policy.

[FR Doc. 05–13811 Filed 7–12–05; 8:45 am]

BILLING CODE 4140–01–M

DEPARTMENT OF HEALTH AND HUMAN SERVICES

National Institutes of Health

National Eye Institute; Notice of Closed Meeting

Pursuant to section 10(d) of the Federal Advisory Committee Act, as amended (5 U.S.C. Appendix 2), notice is hereby given of a meeting of the

Board of Scientific Counselors, National Eye Institute. The meeting will be closed to the public as indicated below in accordance with the provisions set forth in section 552b(c)(6), Title 5 U.S.C., as amended for the review, discussion, and evaluation of individual intramural programs and projects conducted by the National Eye Institute, including consideration of personnel qualifications and performance, and the competence of individual investigations, the disclosure of which would constitute a clearly unwarranted invasion of personal privacy.

Name of Committee: Board of Scientific Counselors, National Eye Institute.

Date: July 17–19, 2005.

Time: July 17, 2005, 7 p.m. to 10 p.m.

Agenda: To review and evaluate personal qualifications and performance, and competence of individual investigators.

Place: Hyatt Regency Bethesda, One Bethesda Metro Center, 7400 Wisconsin Avenue, Bethesda, MD 20814.

Time: July 18, 2005, 8:30 a.m. to 5 p.m.

Agenda: To review and evaluate personal qualifications and performance, and competence of individual investigators.

Place: National Institutes of Health, Building 31, 31 Center Drive, Conference Room 8, Bethesda, MD 20892.

Time: July 19, 2005, 8:30 a.m. to 5 p.m.

Agenda: To review and evaluate personal qualifications and performance, and competence of individual investigators.

Place: National Institutes of Health, Building 31, 31 Center Drive, Conference Room 8, Bethesda, MD 20892.

Contact Person: Sheldon S. Miller, PhD, Scientific Director, National Institutes of Health, National Eye Institute, Bethesda, MD 20892, (301) 451–6763.

This notice is being published less than 15 days prior to the meeting due to the timing limitations imposed by the review and funding cycle.

Information is also available on the Institute's/Center's home page: *http://www.nei.nih.gov,* where an agenda and any additional information for the meeting will be posted when available.

(Catalogue of Federal Domestic Assistance Program Nos. 93.867, Vision Research, National Institutes of Health, HHS)

Dated: July 5, 2005.

LaVerne Y. Stringfield,

Director, Office of Federal Advisory Committee Policy.

[FR Doc. 05–13824 Filed 7–12–05; 8:45 am]

BILLING CODE 4140–01–M

DEPARTMENT OF HEALTH AND HUMAN SERVICES

National Institutes of Health

National Heart, Lung, and Blood Institute; Notice of Closed Meeting

Pursuant to section 10(d) of the Federal Advisory Committee Act, as amended (5 U.S.C. Appendix 2), notice is hereby given of the following meeting.

The meeting will be closed to the public in accordance with the provisions set forth in sections 552b(c)(4) and 552b(c)(6), title 5 U.S.C., as amended. The contract proposals and the discussions could disclose confidential trade secrets or commercial property such as patentable material, and personal information concerning individuals associated with the contract proposals, the disclosure of which would constitute a clearly invasion of personal privacy.

Name of Committee: National Heart, Lung, and Blood Institute Special Emphasis Panel, Genetic Conditions.

Date: July 15, 2005.

Time: 1 p.m. to 4 p.m.

Agenda: To review and evaluate contract proposals.

Place: National Institutes of Health, 6701 Rockledge drive, Bethesda, MD 20892, (Telephone conference call.)

Contact Person: Valerie L. Prenger, PhD., Chief, Review Branch, Division of Extramural Affairs, National Heart, Lung, and Blood Institute, 6701 Rockledge Drive, MSC 7924, Room 7214, Bethesda, MD 20892–7924. (301) 435–0270. *prengerv@nhlbi.nih.gov.*

This notice is being published less than 15 days prior to the meeting due to the timing limitations imposed by the review and funding cycle.

(Catalogue of Federal Domestic Assistance Program Nos. 93.233, National Center for Sleep Disorders Research; 93.837, Heart and Vascular Diseases Research; 93.838, Lung Diseases Research; 93.839, Blood Disease and Resources Research, National Institutes of Health, HHS)

Dated: July 5, 2005.

LaVerne Y. Stringfield,

Director, Office of Federal Advisory Committee Policy.

[FR Doc. 05–13818 Filed 7–12–05; 8:45 am]

BILLING CODE 4140–01–P

DEPARTMENT OF HEALTH AND HUMAN SERVICES

National Institutes of Health

National Institute of Child Health and Human Development; Notice of Closed Meeting

Pursuant to section 10(d) of the Federal Advisory Committee Act, as amended (5 U.S.C. Appendix 2), notice is hereby given of the following meeting.

The meeting will be closed to the public in accordance with the provisions set forth in sections 552b(c)(4) and 552b(c)(6), Title 5 U.S.C., as amended. The grant applications and the discussions could disclose confidential trade secrets or commercial property such as patentable material, and personal information concerning individuals associated with the grant applications, the disclosure of which would constitute a clearly unwarranted invasion of personal privacy.

Name of Committee: National Institute of Child Health and Human Development Special Emphasis Panel, Amphetamine Use in Stroke Recovery.

Date: August 4, 2005.

Time: 2 p.m. to 4 p.m.

Agenda: To review and evaluate grant applications.

Place: National Institutes of Health, 6100 Executive Boulevard, Room 5B01, Rockville, MD 20852, (Telephone Conference Call).

Contact Person: Kishena C. Wadhwani, PhD, MPH, Scientific Review Administrator, Division of Scientific Review, 9000 Rockville Pike, MSC 7510, 6100 Building, Room 5B01, Bethesda, MD 20892–7510, (301) 496–1485, *wadhwank@mail.nih.gov.*

(Catalogue of Federal Domestic Assistance Program Nos. 93.864, Population Research; 93.865, Research for Mothers and Children; 93.929, Center for Medical Rehabilitation Research; 93.209, Contraception and Infertility Loan Repayment Program, National Institutes of Health, HHS)

Dated: July 7, 2005.

LaVerne, Y. Stringfield,

Director, Office of Federal Advisory Committee Policy.

[FR Doc. 05–13806 Filed 7–12–05; 8:45 am]

BILLING CODE 4140–01–M

DEPARTMENT OF HEALTH AND HUMAN SERVICES

National Institutes of Health

National Institute of Child Health and Human Development; Notice of Closed Meeting

Pursuant to section 10(d) of the Federal Advisory Committee Act, as amended (5 U.S.C. Appendix 2), notice is hereby given of the following meeting.

The meeting will be closed to the public in accordance with the provisions set forth in sections 552b(c)(4) and 552(c)(6), Title 5 U.S.C., as amended. The grant applications and the discussions could disclose confidential trade secrets or commercial property such as patentable material, and personal information concerning

individuals associated with the grant applications, the disclosure of which would constitute a clearly unwarranted invasion of personal privacy.

Name of Committee: National Institute of Child Health and Human Development Special Emphasis Panel, FXS Meeting.
Date: July 20, 2005.
Time: 8:30 a.m. to 5 p.m.
Agenda: To review and evaluate grant applications.
Place: The Jefferson, 1200 16th Street, NW., Washington, DC 20036.
Contact Person: Norman Chang, PhD, Scientific Review Administrator, Division of Scientific Review, National Institute of Child Health and Human Development, NIH, 6100 Executive Blvd., Room 5B01, Bethesda, MD 20892, (301) 496–1485, *changn@mail.nih.gov.*

This notice is being published less than 15 days prior to the meeting due to the timing limitations imposed by the review and funding cycle.

(Catalogue of Federal Domestic Assistance Program Nos. 93.864, Population Research; 93.865, Research for Mothers and Children; 93.929, Center for Medical Rehabilitation Research; 93.209, Contraception and Infertility Loan Repayment Program, National Institutes of Health, HHS)

Dated: June 30, 2005.

LaVerne Y. Stringfield,

Director, Office of Federal Advisory Committee Policy.

[FR Doc. 05–13810 Filed 7–12–05; 8:45 am]

BILLING CODE 4140–01–M

DEPARTMENT OF HEALTH AND HUMAN SERVICES

National Institutes of Health

National Institute of General Medical Sciences; Notice of Closed Meeting

Pursuant to section 10(d) of the Federal Advisory Committee Act, as amended (5 U.S.C. Appendix 2), notice is hereby given of the following meeting.

The meeting will be closed to the public in accordance with the provisions set forth in sections 552b(c)(4) and 552b(c)(6), Title 5 U.S.C., as amended. The grant applications and the discussions could disclose confidential trade secrets or commercial property such as patentable material, and personal information concerning individuals associated with the grant applications, the disclosure of which would constitute a clearly unwarranted invasion of personal privacy.

Name of Committee: National Institute of General Medical Sciences Special Emphasis Panel, R13 Conference Grant Applications.
Date: July 22, 2005.
Time: 10 a.m. to 12 p.m.
Agenda: To review and evaluate grant applications.
Place: National Institutes of Health, 45 Center Drive, Room 3AN–12, Bethesda, MD 20892.
Contact Person: Arthur L. Zachary, PhD, Office of Scientific Review, National Institute of General Medical Sciences, National Institutes of Health, Natcher Building, Room 3AN–12, Bethesda, MD 20892, (301) 594–2886, *zacharya@nigms.nih.gov.*

This notice is being published less than 15 days prior to the meeting due to the timing limitations imposed by the review and funding cycle.

(Catalogue of Federal Domestic Assistance Program Nos. 93.375, Monority Biomedical Research Support; 93.821, Cell Biology and Biophysics Research; 93.859, Physiology, and Biological Chemistry Research; 93.862, Genetics and Developmental Biology Research; 93.88, Minority Access to Research Careers; 93.96, Special Minority Initiatives, National Institutes of Health, HHS)

Dated: July 5, 2005.

LaVerne Y. Stringfield,

Director, Office of Federal Advisory Committee Policy.

[FR Doc. 05–13814 Filed 7–12–05; 8:45 am]

BILLING CODE 4140–01–M

DEPARTMENT OF HEALTH AND HUMAN SERVICES

National Institutes of Health

National Institute of Diabetes and Digestive and Kidney Diseases; Notice of Closed Meetings

Pursuant to section 10(d) of the Federal Advisory Committee Act, as amended (5 U.S.C. Appendix 2), notice is hereby given of the following meetings.

The meetings will be closed to the public in accordance with the provisions set forth in sections 552b(c)(4) and 552b(c)(6), Title 5 U.S.C., as amended. The grant applications and the discussions could disclose confidential trade secrets or commercial property such as patentable material, and personal information concerning individuals associated with the grant applications, the disclosure of which would constitute a clearly unwarranted invasion of personal privacy.

Name of Committee: National Institute of Diabetes and Digestive and Kidney Diseases Special Emphasis Panel, Research Grants for Clinical Studies of Kidney Diseases.
Date: July 28–29, 2005.
Time: 8:30 a.m. to 4 p.m.
Agenda: To review and evaluate grant applications.
Place: Crystal City Courtyard by Marriott, 2899 Jefferson Davis Highway, Arlington, VA 22202.
Contact Person: Lakshmanan Sankaran, PhD, Scientific Review Administrator, Review Branch, DEA, NIDDK, National Institutes of Health, Room 777, 6707 Democracy Boulevard, Bethesda, MD 20892–5452, (303) 594–7799, *ls38oz@nih.gov.*

Name of Committee: National Institute of Diabetes and Digestive and Kidney Diseases Special Emphasis Panel, Gastroparesis Clinical Research Consortium.
Date: August 1, 2005.
Time: 8 a.m. to 5 p.m.
Agenda: To review and evaluate grant applications.
Place: Crystal City Marriott, 1999 Jefferson Davis Highway, Arlington, VA 22202.
Contact Person: Dan E. Matsumoto, PhD, Scientific Review Administrator, Review Branch, DEA, NIDDK, Room 749, 6707 Democracy Boulevard, National Institutes of Health, Bethesda, MD 20892–5452, (303) 594–8894, *matsumotod@extra.niddk.nih.gov.*

Name of Committee: National Institute of Diabetes and Digestive and Kidney Diseases Special Emphasis Panel, Ancillary Studies to Major Ongoing NIDDK Clinical Research Studies-Cognition in DPPOS.
Date: August 3, 2005.
Time: 12 p.m. to 2 p.m.
Agenda: To review and evaluate grant applications.
Place: National Institutes of Health, Two Democracy Plaza, 6707 Democracy Boulevard, Bethesda, MD 20892, (Telephone Conference Call).
Contact Person: Xiaodu Guo, MD, PhD, Scientific Review Administrator, Review Branch, DEA, NIDDK, National Institutes of Health, Room 705, 6707 Democracy Boulevard, Bethesda, MD 20892–5452, (301) 594–4719, *guox@extra.niddk.nih.gov.*

Name of Committee: National Institute of Diabetes and Digestive and Kidney Diseases Special Emphasis Panel, Vesicoureteral Reflux in Children.
Date: August 8, 2005.
Time: 8 a.m. to 5 p.m.
Agenda: To review and evaluate grant applications and/or proposals.
Place: Crystal City Marriott, 1999 Jefferson Davis Highway, Arlington, VA 22202.
Contact Person: Dan E. Matsumoto, PhD, Scientific Review Administrator, Review Branch, DEA, NIDDK, Room 749, 6707 Democracy Boulevard, National Institutes of Health, Bethesda, MD 20892–5452, (301) 594–8894, *matsumotod@extra.niddk.nih.gov.*

Name of Committee: National Institute of Diabetes and Digestive and Kidney Diseases Special Emphasis Panel, CVD, ESRD and Nephrology.
Date: August 8, 2005.
Time: 1 p.m. to 2:15 p.m.
Agenda: To review and evaluate grant applications.
Place: National Institutes of Health, Two Democracy Plaza, 6707 Democracy Boulevard, Bethesda, MD 20892, (Telephone Conference Call).
Contact Person: Ned Feder, MD, Scientific Review Administrator, Review Branch, DEA, NIDDK, National Institutes of Health, Room 778, 6707 Democracy Boulevard, Bethesda, MD 20892–5452, (301) 594–8890, *federn@extra.niddk.nih.gov.*

Name of Committee: National Institute of Diabetes and Digestive and Kidney Diseases Special Emphasis Panel, TFF2–TLR and Enterocolitis.

Date: August 9, 2005.
Time: 3 p.m. to 3:40 p.m.
Agenda: To review and evaluate grant applications.
Place: National Institutes of Health, Two Democracy Boulevard, Bethesda, MD 20892, (Telephone Conference Call).
Contact Person: Ned Feder, MD, Scientific Review Administrator, Review Branch, DEA, NIDDK, National Institutes of Health, Room 778, 6707 Democracy Boulevard, Bethesda, MD 20892–5452, (301) 594–8890, *federn@extra.niddk.nih.gov.*

Name of Committee: National Institutes of Diabetes and Digestive and Kidney Diseases Special Emphasis Panel, Family Investigations of Nephropathy and Diabetes.
Date: August 16, 2005.
Time: 1 p.m. to 4 p.m.
Agenda: To review and evaluate grant applications.
Place: National Institutes of Health, Two Democracy Plaza, 6707 Democracy Boulevard, Bethesda, MD 20892, (Telephone Conference Call).
Contact Person: Ned Feder, MD, Scientific Review Administrator, Review Branch, DEA, NIDDK, National Institutes of Health, Room 778, 6707 Democracy Boulevard, Bethesda MD 20892–5452, (301) 594–8890, *federn@extra.niddk.nih.gov.*

(Catalogue of Federal Domestic Assistance Program Nos. 93.847, Diabetes, Endocrinology and Metabolic Research; 93.848, Digestive Diseases and Nutrition Research; 93.849, Kidney Diseases, Urology and Hematology Research, National Institutes of Health, HHS)

Dated: July 5, 2005.

LaVerne Y. Stringfield,

Director, Office of Federal Advisory Committee Policy.

[FR Doc. 05–13825 Filed 7–12–05; 8:45 am]

BILLING CODE 4140–01–M

DEPARTMENT OF HEALTH AND HUMAN SERVICES

National Institutes of Health

National Institutes on Deafness and Other Communication Disorders; Notice of Meeting

Pursuant to section 10(d) of the Federal Advisory Committee Act, as amended (5 U.S.C. Appendix 2), notice is hereby given of a meeting of the National Deafness and Other Communication Disorders Advisory Council.

The meeting will be open to the public as indicated below, with attendance limited to space available. Individuals who plan to attend and need special assistance, such as sign language interpretation or other reasonable accommodations, should notify the Contact Person listed below in advance of the meeting.

The meeting will be closed to the public in accordance with the provisions set forth in sections 552b(c)(4) and 552b(c)(6), Title 5 U.S.C., as amended. The grant applications and the discussions could disclose confidential trade secrets or commercial property such as patentable material, and personal information concerning individuals associated with the grant applications, the disclosure of which would constitute a clearly unwarranted invasion of personal privacy.

Name of Committee: National Defense and Other Communication Disorder Advisory Council.
Date: September 1, 2005.
Open: 8:30 a.m. to 11:30 a.m.
Agenda: Staff reports on divisional, programmatic and special activities.
Place: National Institutes of Health, Building 31, 31 Center Drive, CR–10, Bethesda, MD 20892.
Closed: 11:30 a.m. to 2:30 p.m.
Agenda: To review and evaluate grant applications.
Place: National Institutes of Health, Building 31, 31 Center Drive, CR–10, Bethesda, MD 20892.
Contact Person: Craig A. Jordan, PhD, Director, Division of Extramural Activities, NIDCD, NIH, Executive Plaza South, Room 400C, 6120 Executive Blvd., Bethesda, MD 20892–7180, 301–496–8693, *jordanc@nidcd.nih.gov.*

Any interested person may file written comments with the committee by forwarding the statement to the Contact Person listed on this notice. The statement should include the name, address, telephone number and when applicable, the business or professional affiliation of the interested person.

In the interest of security, NIH has instituted stringent procedures for entrance into the building by non-government employees. Persons without a government I.D. will need to show a photo I.D. and sign-in at the security desk upon entering the building.

Information is also available on the Institute's/Center's home page: *http://www.nidcd.nih.gov/about/councils/ndcdac/ndcdac.htm,* where an agenda and any additional information for the meeting will be posted when available.

(Catalogue of Federal Domestic Assistance Program Nos. 93.173, Biological Research Related to Deafness and Communicative Disorders, National Institutes of Health, HHS)

Dated: July 5, 2005.

LaVerne Y. Stringfield,

Director, Office of Federal Advisory Committee Policy.

[FR Doc. 05–13826 Filed 7–12–05; 8:45 am]

BILLING CODE 4140–01–M

DEPARTMENT OF HEALTH AND HUMAN SERVICES

National Institutes of Health

National Library of Medicine: Notice of Meetings

Pursuant to section 10(d) of the Federal Advisory Committee, as amended (5 U.S.C. Appendix 2), notice is hereby given of meetings of the Board of Regents of the National Library of Medicine.

The meetings will be open to the public as indicated below, with attendance limited to space available. Individuals who plan to attend and need special assistance, such as sign language interpretation or other reasonable accommodations, should notify the Contact Person listed below in advance of the meeting.

The meetings will be closed to the public in accordance with the provisions set forth in sections 552b(c)(4) and 552b(c)(6), Title U.S.C., as amended. The grant applications and the discussions could disclose confidential trade secrets or commercial property such as patentable material, and personal information concerning individuals associated with the grant applications, the disclosure of which would constitute a clearly unwarranted invasion of personal privacy.

Name of Committee: Board of Regents of the National Library of Medicine, Extramural Programs Subcommittee.
Date: September 19, 2005.
Closed: 4 p.m. to 6 p.m.
Agenda: To review and evaluate grant applications.
Place: National Library of Medicine, Building 38, Board Room, 2nd Floor, 8600 Rockville Pike, Bethesda, MD 20892.
Contact Person: Donald B. Lindberg, MD, Director, National Library of Medicine, 8600 Rockville Pike, Bethesda, MD 20894, 301–496–6221, *lindberg@mail.nih.gov.*

Name of Committee: Board of Regents of the National Library of Medicine, Subcommittee on Outreach and Public Information.
Date: September 20, 2005.
Open: 7:30 a.m. to 8:45 a.m.
Agenda: Outreach Activities.
Place: National Library of Medicine, Building 38, Board Room, 2nd Floor, 8600 Rockville Pike, Bethesda, MD 20892.
Contact Person: Donald B. Lindberg, MD, Director, National Library of Medicine, 8600 Rockville Pike, Bethesda, MD 20894, 301–496–6221, *lindberg@mail.nih.gov.*

Name of Committee: Board of Regents of the National Library of Medicine, Subcommittee on Outreach and Public Information.
Date: September 20–21, 2005.
Open: September 20, 2005, 9 a.m. to 4:30 p.m.
Agenda: Administrative Reports and Program Discussion.

Place: National Library of Medicine, Building 38, Board Room, 2nd Floor, 8600 Rockville Pike, Bethesda, MD 20892.

Closed: September 20, 2005, 4:30 p.m. to 5 p.m.

Agenda: To review and evaluate grant applications.

Place: National Library of Medicine, Building 38, Board Room, 2nd Floor, 8600 Rockville Pike, Bethesda, MD 20892.

Open: September 21, 2005, 9 a.m. to 12 p.m.

Agenda: Administrative Reports and Program Discussion.

Place: National Library of Medicine, Building 38, Board Room, 2nd Floor, 8600 Rockville Pike, Bethesda, MD 20892.

Contact Person: Donald A.B. Lindberg, MD, Director, National Library of Medicine, 8600 Rockville Pike, Bethesda, MD 20894, 301–496–6221, *lindberg@mail.nih.gov.*

Name of Committee: Board of Regents of the National Library of Medicine, Long-Range Planning Subcommittee.

Date: September 21, 2005.

Open: 7:30 a.m. to 8:45 a.m.

Agenda: Long-Range Planning.

Place: National Library of Medicine, Building 38, Board Room, 2nd Floor, 8600 Rockville Pike, Bethesda, MD 20892.

Contact Person: Donald A.B. Lindberg, MD, Director, National Library of Medicine, 8600 Rockville Pike, Bethesda, MD 20894, 301–496–6221, *lindberg@mail.nih.gov.*

Any interested person may file written comments with the committee by forwarding the statement to the Contact Person listed on this notice. The statement should include the name, address, telephone number and when applicable, the business or professional affiliation of the interested person.

In the interest of security, NIH has instituted stringent procedures for entrance into the building by non-government employees. Persons without a government I.D. will need to show a photo I.D. and sign-in at the security desk upon entering the building.

Information is also available on the Institute's/Center's home page: *http://www.nlm.nih.gov/od/bor/bor.html,* where an agenda and any additional information for the meeting will be posted when available.

(Catalogue of Federal Domestic Assistance Program Nos. 93.879, Medical Library Assistance, National Institutes of Health, HHS)

Dated: July 7, 2005.

LaVerne Y. Stringfield,

Director, Office of Federal Advisory Committee Policy.

[FR Doc. 05–13805 Filed 7–12–05; 8:45 am]

BILLING CODE 4140–01–M

DEPARTMENT OF HEALTH AND HUMAN SERVICES

National Institutes of Health

National Library of Medicine; Notice of Closed Meetings

Pursuant to section 10(d) of the Federal Advisory Committee Act, as amended (5 U.S.C. Appendix 2), notice is hereby given of the following meetings.

The meetings will be closed to the public in accordance with the provisions set forth in sections 552b(c)(4) and 552b(c)(6), Title 5 U.S.C., as amended. The grant applications and the discussions could disclose confidential trade secrets or commercial property such as patentable material, and personal information concerning individuals associated with the grant applications, the disclosure of which would constitute a clearly unwarranted invasion of personal privacy.

Name of Committee: National Library of Medicine Special Emphasis Panel, G13.

Date: August 5, 2005.

Time: 1 p.m. to 2 p.m.

Agenda: To review and evaluate grant applications.

Place: National Library of Medicine, 6705 Rockledge Drive, Suite 301, Bethesda, MD 20817, (Telephone Conference Call).

Contact Person: Hua-Chuan Sim, MD, Health Science Administrator, National Library of Medicine, Extramural Programs, 6705 Rockledge Drive, Suite 301, Bethesda, MD 20892, 301–496–4253, *simh@mail.nih.gov.*

Name of Committee: National Library of Medicine Special Emphasis Panel, Research Grant.

Date: August 12, 2005.

Time: 1 p.m. to 3 p.m.

Agenda: To review and evaluate grant applications.

Place: National Library of Medicine, 6705 Rockledge Drive, Suite 301, Bethesda, MD 20817, (Telephone Conference Call).

Contact Person: Hua-Chuan Sim, MD, Health Science Administrator, National Library of Medicine, Extramural Programs, 6705 Rockledge Drive, Suite 301, Bethesda, MD 20892, 301–496–4253, *simh@mail.nih.gov.*

Name of Committee: National Library of Medicine Special Emphasis Panel, K22/Fellowship.

Date: August 15, 2005.

Time: 1 p.m. to 3 p.m.

Agenda: To review and evaluate grant applications.

Place: National Library of Medicine, 6705 Rockledge Drive, Suite 301, Bethesda, MD 20817, (Telephone Conference Call).

Contact Person: Hua-Chuan Sim, MD, Health Science Administrator, National Library of Medicine, Extramural Programs, 6705 Rockledge Drive, Suite 301, Bethesda, MD 20892, 301–496–4253, *simh@mail.nih.gov.*

(Catalogue of Federal Domestic Assistance Program Nos. 93.879, Medical Library Assistance, National Institutes of Health, HHS)

Dated: June 30, 2005.

LaVerne Y. Stringfield,

Director, Office of Federal Advisory Committee Policy.

[FR Doc. 05–13812 Filed 7–12–05; 8:45 am]

BILLING CODE 4140–01–M

DEPARTMENT OF HEALTH AND HUMAN SERVICES

National Institutes of Health

National Library of Medicine; Notice of Meeting

Pursuant to section 10(a) of the Federal Advisory Committee Act, as amended (5 U.S.C. Appendix 2), notice is hereby given of the eighth through twelfth meetings of the Commission on Systemic Interoperability.

The meetings will be open to the public, with attendance limited to space available. Individuals who plan to attend and need special assistance, such as sign language interpretation or other reasonable accommodations, should notify the Contact Person listed below in advance of the meeting.

The mission of the Commission on Systemic Interoperability is to submit a report to the Secretary of Health and Human Services and to Congress on a comprehensive strategy for the adoption and implementation of health care information technology standards that includes a timeline and prioritization for such adoption and implementation. In developing that strategy, the Commission will consider: (1) The costs and benefits of the standards, both financial impact and quality improvement; (2) the current demand on industry resources to implement the Medicare Prescription Drug, Improvement, and Modernization Act of 2003 and other electronic standards, including HIPAA standards; and (3) the most cost-effective and efficient means for industry to implement the standards.

Name of Committee: Commission on Systemic Interoperability.

Date: August 10, 2005.

Time: 8 a.m. to 4 p.m.

Agenda: Healthcare Information Technology Standards.

Place: Hubert H. Humphreys Building, Room 800, 200 Independence Avenue, Washington, DC 20201.

Contact Person: Ms. Dana Haza, Director, Commission on Systemic Interoperability, National Library of Medicine, National Institutes of Health, Building 38, Room 2N21, Bethesda, MD 20894. 301–594–7520. *Hazad@mail.nih.gov.*

Name of Committee: Commission on Systemic Interoperability.

Date: August 29, 2005.

Time: 3 p.m. to 4:30 p.m.

Agenda: Healthcare Information Technology Standards.

Place: National Library of Medicine, NIH, Conference Room B, Building 38, 2nd Floor, 8600 Rockville Pike, Bethesda, MD 20894. (Telephone conference call.)

Contact Person: Ms. Dana Haza, Director, Commission on Systemic Interoperability, National Library of Medicine, National Institutes of Health, Building 38, Room 2N21,

Bethesda, MD 20894. 301–594–7520. *Hazad@mail.nih.gov*.

Name of Committee: Commission on Systemic Interoperability.
Date: September 13, 2005.
Time: 8 a.m. to 4 p.m.
Agenda: Healthcare Information Technology Standards.
Place: Hubert H. Humphreys Building, Room 800, 200 Independence Avenue, Washington, DC 20201.
Contact Person: Ms. Dana Haza, Director, Commission on Systemic Interoperability, National Library of Medicine, National Institutes of Health, Building 38, Room 2N21, Bethesda, MD 20894. 301–594–7520. *Hazad@mail.nih.gov*.

Name of Committee: Commission on Systemic Interoperability.
Date: October 11, 2005.
Time: 3 p.m. to 4:30 p.m.
Agenda: Healthcare Information Technology Standards.
Place: National Library of Medicine, NIH, Conference Room B, Building 38, 2nd Floor, 8600 Rockville Pike, Bethesda, MD 20894. (Telephone conference call.)
Contact Person: Ms. Dana Haza, Director, Commission on Systemic Interoperability, National Library of Medicine, National Institutes of Health, Building 38, Room 2N21, Bethesda, MD 20894. 301–594–7520. *Hazad@mail.nih.gov*.

Name of Committee: Commission on Systemic Interoperability (Final Meeting).
Date: October 24, 2005.
Time: 8 a.m. to 1 p.m.
Agenda: Healthcare Information Technology Standards.
Place: Hubert H. Humphreys Building, Room 800, 200 Independence Avenue, Washington, DC 20201.
Contact Person: Ms. Dana Haza, Director, Commission on Systemic Interoperability, National Library of Medicine, National Institutes of Health, Building 38, Room 2N21, Bethesda, MD 20894. 301–594–7520. *Hazad@mail.nih.gov*.

Any interested person may file written comments with the committee by forwarding the statement to the Contact Person listed on this notice. The comments should include the name, address, telephone number and, when applicable, the business or professional affiliation of the interested person.

Dated: July 5, 2005.

Anna Snouffer,

Deputy Director, Office of Federal Advisory Committee Policy.

[FR Doc. 05–13815 Filed 7–12–05; 8:45 am]

BILLING CODE 4140–01–M

DEPARTMENT OF HEALTH AND HUMAN SERVICES

National Institutes of Health

Center for Scientific Review; Notice of Closed Meetings

Pursuant to section 10(d) of the Federal Advisory Committee Act, as amended (5 U.S.C. Appendix 2), notice is hereby given of the following meetings.

The meeting will be closed to the public as indicated below in accordance with the provisions set forth in section 552b(c)(4) and 552b(c)(6), Title 5 U.S.C., as amended. The grant applications and the discussions could disclose confidential trade secrets or commercial property such as patentable material, and personal information concerning individuals association with the grant applications, the disclosure of which would constitute a clearly unwarranted invasion of personal privacy.

Name of Committee: Center for Scientific Review Special Emphasis Panel, Member Conflict: Variability and Response to Morphine.
Date: July 15, 2005.
Time: 12 p.m. to 1 p.m.
Agenda: To review and evaluate grant applications.
Place: National Institutes of Health, 6701 Rockledge Drive, Bethesda, MD 20892, (Telephone Conference Call).
Contact Person: Daniel R. Kenshalo, PhD, Scientific Review Administrator, Center for Scientific Review, National Institutes of Health, 6701 Rockledge Drive, Room 5176, MSC 7844, Bethesda, MD 20892, 301–435–1255, *kenshalod@csr.nih.gov*

This notice is being published less than 15 days prior to the meeting due to the timing limitations imposed by the review and funding cycle.

Name of Committee: Center for Scientific Review Special Emphasis Panel, Retinal and Ocular Degeneration.
Date: July 28, 2005.
Time: 1 p.m. to 3 p.m.
Agenda: To review and evaluate grant applications.
Place: National Institutes of Health, 6701 Rockledge Drive, Bethesda, MD 20892, (Telephone Conference Call).
Contact Person: Raya Mandler, PhD, Scientific Review Administrator, Center for Scientific Review, National Institutes of Health, 6701 Rockledge Drive, Room 5217, MSC 7840, Bethesda, MD 20892, (301) 402–8228, *rayam@csr.nih.gov.*

Name of Committee: Center for Scientific Review Special Emphasis Panel, Bioengineering Research Partnerships.
Date: August 1, 2005.
Time: 8 a.m. to 5 p.m.
Agenda: To review and evaluate grant applications.
Place: Hyatt Regency Bethesda, One Bethesda Metro Center, 7400 Wisconsin Avenue, Bethesda, MD 20814.
Contact Person: Sally Ann Amero, PhD, Scientific Review Administrator, Center for Scientific Review, National Institutes of Health, 6701 Rockledge Drive, Room 4190, MSC 7849, Bethesda, MD 20892, (301) 435–1159, *ameros@csr.nih.gov.*

Name of Committee: Center for Scientific Review Special Emphasis Panel, Member Conflicts-Sleep.
Date: August 2, 2005.
Time: 2 p.m. to 5 p.m.
Agenda: To review and evaluate grant applications.
Place: National Institutes of Health, 6701 Rockledge Drive, Bethesda, MD 20892, (Telephone Conference Call).
Contact Person: Richard Marcus, PhD, Scientific Review Administrator, Center for Scientific Review, National Institutes of Health, 6701 Rockledge Drive, Room 5168, MSC 7844, Bethesda, MD 20892, (301) 435–1245, *marcusr@csr.nih.gov.*

Name of Committee: Center for Scientific Review Special Emphasis Panel, Tuberculosis.
Date: August 3, 2005.
Time: 1:30 p.m. to 3:30 p.m.
Agenda: To review and evaluate grant applications.
Place: National Institutes of Health, 6701 Rockledge Drive, Bethesda, MD 20892, (Telephone Conference Call).
Contact Person: Marian Wachtel, PhD, Scientific Review Administrator, Center for Scientific Review, National Institutes of Health, 6701 Rockledge Drive, Room 3208, MSC 7858, Bethesda, MD 20892, (301) 435–1148, *wachtelm@csr.nih.gov.*

Name of Committee: Center for Scientific Review Special Emphasis Panel, Shared Instrumentation Grant Applications.
Date: August 4, 2005.
Time: 8 a.m. to 6 p.m.
Agenda: To review and evaluate grant applications.
Place: The Watergate, 2650 Virginia Avenue, NW., Washington, DC 20037.
Contact Person: George W. Chacko, PhD, Scientific Review Administrator, Center for Scientific Review, National Institutes of Health, 6701 Rockledge Drive, Room 4186, MSC 7849, Bethesda, MD 20892, (301) 435–1220, *chackoge@csr.nih.gov.*

Name of Committee: Center for Scientific Review Special Emphasis Panel, BMRD Member Conflict.
Date: August 4, 2005.
Time: 1 p.m. to 3 p.m.
Agenda: To review and evaluate grant applications.
Place: National Institutes of Health, 6701 Rockledge Drive, Bethesda, MD 20892, (Telephone Conference Call).
Contact Person: Sandra L. Melnick, DRPH, Scientific Review Administrator, Center for Scientific Review, National Institutes of Health, 6701 Rockledge Drive, Room 3028D, MSC 7770, Bethesda, MD 20892, 301–435–1251, *melnicks@csr.nih.gov.*

Name of Committee: Center for Scientific Review Special Emphasis Panel, Member Conflict: Energy Balance and the Brain.
Date: August 4, 2005.
Time: 12 p.m. to 1 p.m.
Agenda: To review and evaluate grant applications.
Place: National Institutes of Health, 6701 Rockledge Drive, Bethesda, MD 20892, (Telephone Conference Call).
Contact Person: Richard Marcus, PhD, Scientific Review Administrator, Center for Scientific Review, National Institutes of Health, 6701 Rockledge Drive, Room 5168, MSC 7844, Bethesda, MD 20892, 301–435–1245, *marcusr@csr.nih.gov.*

Name of Committee: Center for Scientific Review Special Emphasis Panel, Genetic Modifiers of Lung Cancer.
Date: August 8, 2005.
Time: 10 a.m. to 11:30 a.m.
Agenda: To review and evaluate grant applications.
Place: National Institutes of Health, 6701 Rockledge Drive, Bethesda, MD 20892, (Telephone Conference Call).
Contact Person: Morris I. Kelsey, PhD, Scientific Review Administrator, Center for Scientific Review, National Institutes of Health, 6701 Rockledge Drive, Room 6208, MSC 7804, Bethesda, MD 20892, 301–435–1718, *kelseym@csr.nih.gov.*

Name of Committee: Center for Scientific Review Special Emphasis Panel, Molecular Genetics Member Conflict.
Date: August 8, 2005.
Time: 1 p.m. to 3 p.m.
Agenda: To review and evaluate grant applications.
Place: National Institutes of Health, 6701 Rockledge Drive, Bethesda, MD 20892, (Telephone Conference Call).
Contact Person: Barbara Whitmarsh, PhD, Scientific Review Administrator, Center for Scientific Review, National Institutes of Health, 6701 Rockledge Drive, Room 2206, MSC 7890, Bethesda, MD 20892, 301–425–4511, *whitmarshb@csr.nih.gov.*

Name of Committee: Center for Scientific Review Special Emphasis Panel, Assays and Methods Development.
Date: August 8–9, 2005.
Time: 7:30 p.m. to 5 p.m.
Agenda: To review and evaluate grant applications.
Place: Bethesda Park Hotel, 8400 Wisconsin Avenue, Bethesda, MD 20814.
Contact Person: Ping Fan, PhD, MD, Scientific Review Administrator, Center for Scientific Review, National Institutes of Health, 6701 Rockledge Drive, Room 5154, MSC 7840, Bethesda, MD 20892, 301–435–1740, *fanp@csr.nih.gov.*

Name of Committee: Center for Scientific Review Special Emphasis Panel, Coccidioidal Vaccine Development.
Date: August 11, 2005.
Time: 11 a.m. to 12:30 p.m.
Agenda: To review and evaluate grant applications.
Place: National Institutes of Health, 6701 Rockledge Drive, Bethesda, MD 20892, (Telephone Conference Call).
Contact Person: Jin Huang, PhD, Scientific Review Administrator, Center for Scientific Review, National Institutes of Health, 6701 Rockledge Drive, Room 4095G, MSC 7812, Bethesda, MD 20892, 301–435–1187, *jh377p@nih.gov.*

Name of Committee: Center for Scientific Review Special Emphasis Panel, Leishmania Biology.
Date: August 11, 2005.
Time: 1 p.m. to 4 p.m.
Agenda: To review and evaluate grant applications.
Place: National Institutes of Health, 6701 Rockledge Drive, Bethesda, MD 20892, (Telephone Conference Call).
Contact Person: Joseph D. Mosca, PhD, Scientific Review Administrator, Center for Scientific Review, National Institutes of Health, 6701 Rockledge Drive, Room 5158, MSC 7808, Bethesda, MD 20892, 301–435–2344, *moscajos@csr.nih.gov.*

Name of Committee: Center for Scientific Review Special Emphasis Panel
Date: August 11, 2005.
Time: 1:30 p.m. to 3:30 p.m.
Agenda: To review and evaluate grant applications.
Place: National Institutes of Health, 6701 Rockledge Drive, Bethesda, MD 20892, (Telephone Conference Call).
Contact Person: Marian Wachtel, PhD, Scientific Review Administrator, Center for Scientific Review, National Institutes of Health, 6701 Rockledge Drive, Room 3208, MSC 7858, Bethesda, MD 20892, 301–435–1148, *wachtelm@csr.nih.gov.*

Name of Committee: Center for Scientific Review Special Emphasis Panel, Lymphocyte Signaling.
Date: August 11, 2005.
Time: 12 p.m. to 1 p.m.
Agenda: To review and evaluate grant applications.
Place: National Institutes of Health, 6701 Rockledge Drive, Bethesda, MD 20892, (Telephone Conference Call).
Contact Person: Angela Y. Ng, PhD, MBA, Scientific Review Administrator, Center for Scientific Review, National Institutes of Health, 6701 Rockledge Drive, Room 6200, MSC 7804, (For courier delivery, use MD 20817), Bethesda, MD 20892, 301–435–1715, *nga@csr.nih.gov.*

Name of Committee: Center for Scientific Review Special Emphasis Panel.
Date: August 12, 2005.
Time: 10 a.m. to 4 p.m.
Agenda: To review and evaluate grant applications.
Place: The River Inn, 924 25th Street, Washington, DC 20037.
Contact Person: J. Terrell Hoffeld, DDS, PhD, Dental Officer, USPHS, Center for Scientific Review, National Institutes of Health, 6701 Rockledge Drive, Room 4116, MSC 7816, Bethesda, MD 20892, 301–435–1781, *hoffeldt@csr.nih.gov.*

Name of Committee: Center for Scientific Review Special Emphasis Panel, E. coli Replication Control.
Date: August 12, 2005.
Time: 1 p.m. to 3 p.m.
Agenda: To review and evaluate grant applications.
Place: National Institutes of Health, 6701 Rockledge Drive, Bethesda, MD 20892, (Telephone Conference Call).
Contact Person: Joseph D. Mosca, PhD, Scientific Review Administrator Center for Scientific Review, National Institutes of Health, 6701 Rockledge Drive, Room 5158, MSC 7808, Bethesda, MD 20892, 301–435–2344, *moscajos@csr.nih.gov.*

(Catalogue of Federal Domestic Assistance Program Nos. 93.306, Comparative Medicine; 93.333, Clinical Research, 93.306, 93.333, 93.337, 93.393–93.396, 93.837–93.844, 93.846–93.878, 93.892, 93.893, National Institutes of Health, HHS)

Dated: July 7, 2005.

LaVerne Y. Stringfield,

Director, Office of Federal Advisory Committee Policy.

[FR Doc. 05–13807 Filed 7–12–05; 8:45 am]

BILLING CODE 4140–01–M

DEPARTMENT OF HEALTH AND HUMAN SERVICES

National Institutes of Health

Center for Scientific Review; Amended Notice of Meeting

Notice is hereby given of a change in the meeting of the Center for Scientific Review Special Emphasis Panel, July 14, 2005, 1 p.m. to July 14, 2005, 2 p.m., National Institutes of Health, 6701 Rockledge Drive, Bethesda, MD 20892, which was published in the **Federal Register** on June 29, 2005, 70 FR 37418–37421.

The meeting will be held July 26, 2005. The meeting time and location remain the same. The meeting is closed to the public.

Dated: July 7, 2005.

LaVerne Y. Stringfield,

Director, Office of Federal Advisory Committee Policy.

[FR Doc. 05–13808 Filed 7–12–05; 8:45 am]

BILLING CODE 4140–01–M

DEPARTMENT OF HEALTH AND HUMAN SERVICES

National Institutes of Health

Center for Scientific Review; Amended Notice of Meeting

Notice is hereby given of a change in the meeting of the Center for Scientific Review Special Emphasis Panel, July 11, 2005, 12 p.m. to July 11, 2005, 2 p.m., National Institutes of Health, 6701 Rockledge Drive, Bethesda, MD 20892 which was published in the **Federal Register** on June 22, 2005, 70 FR 36195–36197.

The meeting will be held July 19, 2005, from 4 p.m. to 6 p.m. The meeting location remains the same. The meeting is closed to the public.

Dated: July 7, 2005.

LaVerne Y. Stringfield,

Director, Office of Federal Advisory Committee Policy.

[FR Doc. 05–13809 Filed 7–12–05; 8:45 am]

BILLING CODE 4140–01–M

DEPARTMENT OF HEALTH AND HUMAN SERVICES

National Institutes of Health

Center for Scientific Review; Amended Notice of Meeting

Notice is hereby given of a change in the meeting of the Center for Scientific Review Special Emphasis Panel, July 15, 2005, 11 a.m. to July 15, 2005, 1 p.m., National Institutes of Health, 6701 Rockledge Drive, Bethesda, MD 20892 which was published in the **Federal Register** on June 29, 2005, 70 FR 37421–37423.

The meeting will be held on July 21, 2005. The meeting time and location remain the same. The meeting is closed to the public.

Dated: July 5, 2005.

LaVerne Y. Stringfield,

Director, Office of Federal Advisory Committee Policy.

[FR Doc. 05–13819 Filed 7–12–05; 8:45 am]

BILLING CODE 4140–01–M

DEPARTMENT OF HEALTH AND HUMAN SERVICES

National Institutes of Health

Center for Scientific Review; Amended Notice of Meeting

Notice is hereby given of a change in the meeting of the Center for Scientific Review Special Emphasis Panel, July 11, 2005, 1 p.m. to July 11, 2005, 2 p.m., National Institutes of Health, 6701 Rockledge Drive, Bethesda, MD 20892 which was published in the **Federal Register** on June 22, 2005, 70 FR 36198–36200.

The meeting will be held on July 13, 2005, from 3 p.m. to 4 p.m. The location remains the same. The meeting title has been changed to ''Member Conflict: Neuronal Motor Mechanisms''. The meeting is closed to the public.

Dated: July 5, 2005.

LaVerne Y. Stringfield,

Director, Office of Federal Advisory Committee Policy.

[FR Doc. 05–13820 Filed 7–12–05; 8:45 am]

BILLING CODE 4140–01–M

DEPARTMENT OF HEALTH AND HUMAN SERVICES

National Institutes of Health

Center for Scientific Review; Amended Notice of Meeting

Notice is hereby given of a change in the meeting of the Center for Scientific Review Special Emphasis Panel, July 12, 2005, 1 p.m. to July 12, 2005, 2 p.m., National Institutes of Health, 6701 Rockledge Drive, Bethesda, MD 20892 which was published in the **Federal Register** on June 29, 2005, 70 FR 37418–37421.

The meeting will held on July 22, 2005. The meeting time and location remain the same. The meeting is closed to the public.

Dated: July 5, 2005.

LaVerne Stringfield,

Director, Office of Federal Advisory Committee Policy.

[FR Doc. 05–13821 Filed 7–12–05; 8:45 am]

BILLING CODE 4140–01–M

DEPARTMENT OF HEALTH AND HUMAN SERVICES

National Institutes of Health

Center for Scientific Review; Amended Notice of Meeting

Notice is hereby given of a change in the meeting of the Center for Scientific Review Special Emphasis Panel, July 12, 2005, 1 p.m. to July 12, 2005, 2 p.m., Hyatt Regency Bethesda, One Bethesda Metro Center, 7400 Wisconsin Avenue, Bethesda, MD 20814 which was published in the **Federal Register** on June 22, 2005, 70 FR 36198–36200.

The meeting will be held on July 11, 2005, from 4:40 p.m. to 6 p.m. The meeting location remains the same. The meeting is closed to the public.

Dated: July 5, 2005.

LaVerne Y. Stringfield,

Director, Office of Federal Advisory Committee Policy.

[FR Doc. 05–13822 Filed 7–12–05; 8:45 am]

BILLING CODE 4140–01–M

DEPARTMENT OF HEALTH AND HUMAN SERVICES

National Institutes of Health

Center For Scientific Review; Notice of Closed Meetings

Pursuant to section 10(d) of the Federal Advisory Committee Act, as amended (5 U.S.C. Appendix 2), notice is hereby given of the following meetings.

The meetings will be closed to the public in accordance with the provisions set forth in sections 552b(c)(4) and 552b(c)(6), Title 5 U.S.C., as amended. The grant applications and the discussions could disclose confidential trade secrets or commercial property such as patentable material, and personal information concerning individuals associated with the grant applications, the disclosure of which would constitute a clearly unwarranted invasion of personal privacy.

Name of Committee: Center for Scientific Review Special Emphasis Panel, Kidney-Related SBIR Review.

Date: July 12, 2005.

Time: 2 p.m. to 6 p.m.

Agenda: To review and evaluate grant applications.

Place: Holiday Inn Georgetown, 2101 Wisconsin Avenue, NW., Washington, DC 20007.

Contact Person: M. Chris Langub, PHD, Scientific Review Administrator, Center for Scientific Review, National Institutes of Health, 6701 Rockledge Drive, Room 4112, MSC 7814, Bethesda, MD 20892, 301–496–8551, *langubm@csr.nih.gov.*

This notice is being published less than 15 days prior to the meeting due to the timing limitations imposed by the review and funding cycle.

Name of Committee: Center for Scientific Review Special Emphasis Panel, Member Conflict: Biology, Development and Aging.

Date: July 25, 2005.

Time: 3 p.m. to 5 p.m.

Agenda: To review and evaluate grant applications.

Place: Holiday Inn Georgetown, 2101 Wisconsin Avenue, NW., Washington, DC 20007.

Place: National Institutes of Health, 6701 Rockledge Drive, Bethesda, MD 20892, (Telephone Conference Call).

Contact Person: Sherry L. Dupere, PHD, Scientific Review Administrator, Center for Scientific Review, National Institutes of Health, 6701 Rockledge Drive, Room 5136, MSC 7843, Bethesda, MD, 20892, 301–435–1021, *duperes@csr.nih.gov.*

Name of Committee: Center for Scientific Review Special Emphasis Panel, Neurotech/Engineering.

Date: July 27, 2005.

Time: 8 a.m. to 6 p.m.

Agenda: To review and evaluate grant applications.

Place: Sofitel Hotel, 806 15th Street, NW., Washington, DC 20005.

Contact Person: Robert C. Elliott, PHD, Scientific Review Administrator, Center for Scientific Review, National Institutes of Health, 6701 Rockledge Drive, Room 3130, MSC 7850, Bethesda, MD, 20892, 301–435–3009, *elliotro@csr.nih.gov.*

Name of Committee: Center for Scientific Review Special Emphasis Panel, Ischemia and Mobilization of Stem Cells.

Date: July 28, 2005.

Time: 3 p.m. to 4 p.m.

Agenda: To review and evaluate grant applications.

Place: National Institutes of Health, 6701 Rockledge Drive, Bethesda, MD 20892, (Telephone Conference Call).

Contact Person: Rajiv Kumar, PHD, Scientific Review Administrator, Center for Scientific Review, National Institutes of Health, 6701 Rockledge Drive, Room 4122, MSC 7802, Bethesda, MD, 20892, 301–435–1212, *kummarra@csr.nih.gov.*

Name of Committee: Center for Scientific Review Special Emphasis Panel, MOSS Shared Instrumentation.

Date: July 29, 2005.

Time: 9 a.m. to 11 a.m.

Agenda: To review and evaluate grant applications.

Place: Jurys Washington Hotel, 1500 New Hampshire Avenue, NW., Washington, DC 20036.

Contact Person: Jean D. Sipe, PHD, Scientific Review Administrator, Center for Scientific Review, National Institutes of Health, 6701 Rockledge Drive, Room 4106, MSC 7814, Bethesda, MD, 20892, 301–435–1743, *sipej@csr.nih.gov.*

Name of Committee: Center for Scientific Review Special Emphasis Panel, Prosthesis Bioengineering Research Partnerships PAR 04–023.

Date: July 29, 2005.

Time: 11 a.m. to 5 p.m.

Agenda: To review and evaluate grant applications.

Place: Jurys Washington Hotel, 1500 New Hampshire Avenue, NW., Washington, DC 20036.

Contact Person: Jean D. Sipe, PHD, Scientific Review Administrator, Center for Scientific Review, National Institutes of Health, 6701 Rockledge Drive, Room 4106, MSC 7814, Bethesda, MD, 20892, 301–435–1743, *sipe@csr.nih.gov.*

Name of Committee: Center for Scientific Review Special Emphasis Panel, Drug Development.

Date: August 1, 2005.

Time: 8 a.m. to 6 p.m.

Agenda: To review and evaluate grant applications.

Place: Bethesda Marriott, 5151 Pooks Hill Road, Bethesda, MD 20814.

Contact Person: Mary Custer, PhD, Scientific Review Administrator, Center for Scientific Review, National Institutes of Health, 6701 Rockledge Drive, Room 4148, MSC 7850, Bethesda, MD 20892, (301) 435–1164, *custerm@csr.nih.gov.*

Name of Committee: Center for Scientific Review Special Emphasis Panel, Special Panel for Behavioral and Social Aspects of Preventing HIV/AIDS Applications.

Date: August 2, 2005.

Time: 1 p.m. to 3 p.m.

Agenda: To review and evaluate grant applications.

Place: National Institutes of Health, 6701 Rockledge Drive, Bethesda, MD 20892, (Telephone Conference Call).

Contact Person: Mark P. Rubert, PhD, Scientific Review Administrator, Center for Scientific Review, National Institutes of Health, 6701 Rockledge Drive, Room 5218, MSC 7852, Bethesda, MD 20892, (301) 435–1775, *rubertm@csr.nih.gov.*

Name of Committee: Center for Scientific Review Special Emphasis Panel, Behavioral Approach to Colorectal Cancer Screening.

Date: August 2, 2005.

Time: 2 p.m. to 3 p.m.

Agenda: To review and evaluate grant applications.

Place: National Institutes of Health, 6701 Rockledge Drive, Bethesda, MD 20892, (Telephone Conference Call).

Contact Person: Michael Micklin, PhD, Chief, RPHB IRG, Center for Scientific Review, National Institutes of Health, 6701 Rockledge Drive, Room 3136, MSC 7759, Bethesda, MD 20892, (301) 435–1258, *micklinm@csr.nih.gov.*

Name of Committee: Center for Scientific Review Special Emphasis Panel, Member Conflict: Social Science and Population Studies.

Date: August 2, 2005.

Time: 2 p.m. to 4 p.m.

Agenda: To review and evaluate grant applications.

Place: National Institutes of Health, 6705 Rockledge Drive, Bethesda, MD 20817, (Telephone Conference Call).

Contact Person: Valerie Durrant, PhD, Scientific Review Administrator, Center for Scientific Review, National Institutes of Health, 6701 Rockledge Drive, Room 3148, MSC 7770, Bethesda, MD 20892, (301) 435–3554, *durrantv@csr.nih.gov.*

Name of Committee: Center for Scientific Review Special Emphasis Panel, Cortical Circuitry/Axon Path Finding.

Date: August 3, 2005.

Time: 11 a.m. to 1 p.m.

Agenda: To review and evaluate grant applications.

Place: National Institutes of Health, 6701 Rockledge Drive, Bethesda, MD 20892, (Telephone Conference Call).

Contact Person: Syed Husain, PhD, Scientific Review Administrator, Center for Scientific Review, National Institutes of Health, 6701 Rockledge Drive, Room 5216, MSC 7850, Bethesda, MD 20892, (301) 435–1224, *husains@csr.nih.gov.*

(Catalogue of Federal Domestic Assistance Program Nos. 93.306, Comparative Medicine; 93.333, Clinical Research, 93.306, 93.333, 93.337, 93.393–93.396, 93.837–93.844, 93.846–93.878, 93.892, 93.893, National Institutes of Health, HHS)

Dated: July 5, 2005.

LaVerne Y. Stringfield,

Director, Office of Federal Advisory Committee Policy.

[FR Doc. 05–13823 Filed 7–12–05; 8:45 am]

BILLING CODE 4140–01–M

DEPARTMENT OF HOMELAND SECURITY

Office for Civil Rights and Civil Liberties; Interagency Coordinating Council on Individuals With Disabilities in Emergency Preparedness Quarterly Meeting

AGENCY: Office for Civil Rights and Civil Liberties, DHS.

ACTION: Notice of meeting.

SUMMARY: This provides notice of a forthcoming meeting of the Interagency Coordinating Council on Emergency Preparedness and individuals with Disabilities (ICC). Notice of this meeting is intended to inform members of the general public of their opportunity to attend the meeting. The ICC will engage in discussions related to the one year anniversary of Executive Order 13347 and review accomplishment and future goals of the ICC in implementation of this Executive Order. The meeting will be open and accessible to the general public.

DATES: Thursday, July 21, 2005, from 10 a.m.–Noon

ADDRESSES: Federal Communication Commission; 445 12th Street, SW., Washington, DC 20554. The meeting will be held in the Commission Meeting Room, Room #TW–C305.

FOR FURTHER INFORMATION CONTACT: Claudia Gordon, 202–358–2392 (TTY), 202–772–0910 or Debbie Fulmer, 202–401–5815.

SUPPLEMENTARY INFORMATION: The ICC was established under Executive Order 13347, Individuals with Disabilities in Emergency Preparedness signed by President Bush on July 22, 2004. This Executive Order calls on the Federal Government to:

(a) Consider during emergency planning the unique needs of agency employees with disabilities and individuals with disabilities whom the agency serves;

(b) Encourage consideration of the unique needs of employees and individuals with disabilities served by State, local, and tribal governments, private organizations and individuals in emergency preparedness planning; including the provision of technical assistance, as appropriate; and

(c) Facilitate cooperation among Federal, State, local, and tribal governments, private organizations and individuals in the implementation of emergency preparedness plans related to individuals with disabilities.

The Executive Order established the ICC to coordinate activities that ensure the Federal Government appropriately supports safety and security for individuals with disabilities in all hazard situations. The ICC is chaired by the Secretary of Department of Homeland Security.

The meeting site is fully accessible to people using wheelchairs or other mobility aids. Sign language interpreters, open captioning, and assistive listening devices will be provided on site. Request other reasonable accommodations for people with disabilities as early as possible. Last minute requests will be accepted, but may be impossible to fill. Send an e-mail to *fcc504@fcc.gov* or call the Consumer & Governmental Affairs Bureau at 202–418–0530 (voice), 202–418–0432 (TTY). Audio/Video coverage of the meeting will be broadcast live with open captioning over the Internet from the FCC's Audio/Video Events

Web page at *http://www.fcc.gov/realaudio.*

Daniel Sutherland,

Officer for Civil Rights and Civil Liberties.

[FR Doc. 05–13892 Filed 7–12–05; 8:45 am]

BILLING CODE 4410–10–P

DEPARTMENT OF HOMELAND SECURITY

Coast Guard

[USCG–2005–21777]

Towing Safety Advisory Committee

AGENCY: Coast Guard, DHS.

ACTION: Notice of meetings.

SUMMARY: The Towing Vessel Inspection Working Group of the Towing Safety Advisory Committee (TSAC) will meet to discuss matters relating to inspection issues for towing vessels. The meetings will be open to the public.

DATES: The Towing Vessel Inspection Working Group will meet on Tuesday, July 19, 2005 from 9 a.m. to 4:30 p.m. and on Wednesday, July 20, 2005 from 8:30 a.m. to 2:30 p.m. The meetings may close early if all business is finished. Written material and requests to make oral presentations should reach the Coast Guard on or before July 15, 2005. Requests to have a copy of your material distributed to each member of the Working Group should reach the Coast Guard on or before July 15, 2005.

ADDRESSES: The Working Group will meet at George Mason University, Arlington Campus, 3301 Fairfax Drive, Arlington, VA 22201. Please bring a government-issued ID with photo (*e.g.*, driver's license). Send written material and requests to make oral presentations to Mr. Gerald Miante, Commandant (G–MSO–1), U.S. Coast Guard Headquarters, 2100 Second Street SW., Washington, DC 20593–0001. This notice and related documents are available on the Internet at *http://dms.dot.gov* under the docket number USCG–2004–21777.

FOR FURTHER INFORMATION CONTACT: Mr. Gerald Miante, Assistant Executive Director of TSAC, telephone 202–267–0214, fax 202–267–4570, or e-mail *gmiante@comdt.uscg.mil.*

SUPPLEMENTARY INFORMATION: Notice of these meetings is given under the Federal Advisory Committee Act, 5 U.S.C. App. 2 (Pub. L. 92–463, 86 Stat. 770, as amended).

Agenda of Working Group Meetings: The agenda for the Towing Vessel Inspection Working Group tentatively includes the following items:

(1) What personnel standards, if any, should be included in a subchapter devoted to the inspection for certification of towing vessels; and

(2) What standards, if any, regarding use of third parties, including auditing of third parties, should be included in a subchapter devoted to the inspection for certification of towing vessels?

Procedural

The meetings are open to the public. Please note that the meetings may close early if all business is finished. At the Chair's discretion, members of the public may make oral presentations during the meeting. If you would like to make an oral presentation at the meeting, please notify the Assistant Executive Director (as provided above in **FOR FURTHER INFORMATION CONTACT**) no later than July 15, 2005. Written material for distribution at the meeting should reach the Coast Guard no later than July 15, 2005.

Information on Services for Individuals with Disabilities: For information on facilities or services for individuals with disabilities or to request special assistance at the meeting, contact Mr. Miante at the number listed in **FOR FURTHER INFORMATION CONTACT** as soon as possible.

Dated: July 6, 2005.

Howard L. Hime,

Acting Director of Standards, Marine Safety, Security and Environmental Protection.

[FR Doc. 05–13759 Filed 7–12–05; 8:45 am]

BILLING CODE 4910–15–P

DEPARTMENT OF THE INTERIOR

Fish and Wildlife Service

Upper Ouachita National Wildlife Refuge

AGENCY: Fish and Wildlife Service, Department of the Interior.

ACTION: Notice of intent to prepare a Comprehensive Conservation Plan and Environmental Assessment for Upper Ouachita National Wildlife Refuge in Union and Morehouse Parishes, Louisiana.

SUMMARY: This notice advises the public that the fish and Wildlife Service, Southeast Region, intends to gather information necessary to prepare a Comprehensive Conservation Plan and Environmental Assessment for Upper Ouachita National Wildlife Refuge, pursuant to the National Environmental Policy Act and its implementing regulations.

The National Wildlife Refuge System Administration Act of 1966, as amended by the National Wildlife Refuge System Improvement Act of 1997, requires the Service to develop a comprehensive conservation plan for each national wildlife refuge. The purpose in developing a comprehensive conservation plan is to provide refuge managers with a 15-year strategy for achieving refuge purposes and contributing toward the mission of the National Wildlife Refuge System, consistent with sound principles of fish and wildlife management, conservation, legal mandates, and Service policies. In addition to outlining broad management direction on conserving wildlife and their habitats, plans identify wildlife-dependent recreational opportunities available to the public, including opportunities for hunting, fishing, wildlife observation, wildlife photography, and environmental education and interpretation.

The purpose of this notice is to achieve the following:

1. Advise other agencies and the public of our intentions, and

2. Obtain suggestions and information on the scope of issues to include in the environmental document.

DATES: An open house style meeting will be held during the scoping phase and public draft phase of the comprehensive conservation plan development process. Special mailings, newspaper articles, and other media announcements will be used to inform the public and state and local government agencies of the dates and opportunities for input throughout the planning process.

ADDRESSES: Comments and requests for more information regarding Upper Ouachita National Wildlife Refuge's planning process should be sent to Lindy Garner, Planning Biologist, North Louisiana National Wildlife Refuge Complex, 11372 Highway 143, Farmerville, Louisiana 71241; Telephone: (318) 726–4222; Fax: (318) 726–4667; Electronic-mail: *northlarefuges@fws.gov.* To ensure consideration, written comments must be received no later than August 29, 2005. Our practice is to make comments, including names and addresses of respondents, available for public review during regular business hours. Individual respondents may request that we withhold their home addresses from the record, which we will honor to the extent allowable by law.

SUPPLEMENTARY INFORMATION: Upper Ouachita National Wildlife Refuge was established in November 1978. The

purposes of the refuge are ''for use as an inviolate sanctuary, or for any other management purpose, for migratory birds'' (Migratory Bird Conservation Act, 16 U.S.C. 715d); ''* * * the conservation of the wetlands of the nation in order to maintain the public benefits they provide and to help fulfill international obligations contained in various migratory bird treaties and conventions. * * *'' (16 U.S.C. 3901(b)).

Upper Ouachita Refuge is located in northeastern Louisiana. The northern boundary lies on the Louisiana-Arkansas State line. The refuge borders both sides of the Ouachita River for 13.7 miles and extends 3.3 miles to the east and 13 miles to the west. The refuge extends approximately 20 miles in a north-south direction, and its widest east-west dimension is approximately 16 miles. The southernmost point on the refuge is approximately 20 miles north of Monroe, Louisiana. The refuge lies within the Ouachita River Basin, which encompasses much of southwest Arkansas and northeast Louisiana.

The refuge consists of 4,540 acres of pine and pine/hardwood mix, 19,767 acres of bottomland hardwoods, 2,000 acres of shrub-scrub, 1,182 acres of moist soil, 2,540 acres of agricultural fields, 9,236 acres of reforested bottomlands, 474 acres of fallow agricultural fields, and 2,907 acres of open water. Wildlife species found on the refuge are typical of forested wetlands, moist soils, early successional forests, and upland hardwood/pine habitats. The refuge provides habitat for thousands of wintering ducks and geese and year-round habitat for nesting wood ducks. Although no large rookeries are located on the refuge, thousands of wading and water birds, such as white ibis, herons, egrets, wood storks, cormorants, and anhingas, forage in the sloughs, bayous, and Mollicy Unit. Many neotropical migratory birds breed on the refuge while other species use the refuge during migration, especially along the Ouachita River. Resident game species include fox and gray squirrels, rabbits, and deer. Furbearers present include muskrat, nutria, mink, river otter, beaver, red and gray fox, and racoon.

Three threatened and endangered species utilize the refuge. Currently, there is one active group of the endangered red-cockaded woodpecker on the refuge. Threatened Louisiana black bear have become more common on the refuge recently. Many threatened bald eagles are seen during the year, mainly winter, on the refuge. Bald eagles have also begun to nest successfully on the refuge within the last three years.

Hunting and fishing opportunities are permitted on most areas of the refuge, and is open year-round for wildlife observation, nature photography, and hiking.

The Service will conduct a comprehensive conservation planning process that will provide opportunity for State and local governments, agencies, organizations, and the public to participate in issue scoping and public comment. Comments received by the Planning Team will be used as part of the planning process.

Authority: This notice is published under the authority of the National Wildlife Refuge System Improvement Act of 1997, Public Law 105–57.

Dated: June 17, 2005.

Cynthia K. Dohner,

Acting Regional Director.

[FR Doc. 05–13730 Filed 7–12–05; 8:45 am]

BILLING CODE 4310–55–M

DEPARTMENT OF THE INTERIOR

Bureau of Indian Affairs

Submission of Information Collection to the Office of Management and Budget for Review

AGENCY: Bureau of Indian Affairs, Interior.

ACTION: Notice of submission of information collection to the Office of Management and Budget.

SUMMARY: The Bureau of Indian Affairs (BIA) is submitting the information collection on Indian Service Population and Labor Force Estimates for review and renewal as required by the Paperwork Reduction Act of 1995. The OMB Control Number is 1076–0147.

DATES: Submit comments on or before August 12, 2005.

ADDRESSES: You may submit comments on the information collection to the Desk Officer for Department of the Interior at the Office of Management and Budget, by facsimile to (202) 395–6566 or you may send an e-mail to: *OIRA_DOCKET@ omb.eop.gov*.

Please send copy of your comments to Mr. Harry Rainbolt, Assistant to the Deputy Bureau Director, Tribal Services, Bureau of Indian Affairs, Department of the Interior, 1951 Constitution Avenue, Mail Stop 320–SIB, NW., Washington, DC 20240; Telephone (202) 513–7640, Facsimile (202) 208–3112.

FOR FURTHER INFORMATION CONTACT: You may request further information or obtain copies of the information collection request submission from Mr. Rainbolt, as identified in the **ADDRESSES** section.

SUPPLEMENTARY INFORMATION: Information is mandated by Congress through Public Law 102–477, Indian Employment, Training and Related Services Demonstration Act (Act) of 1992, section 17. The Bureau of Indian Affairs (BIA) is submitting the information collection for renewal. The Act requires the Secretary to develop, maintain and publish, not less than biennially, a report on the population by gender, income level, age, and availability for work. The report will be submitted to the Senate Indian Affairs Committee, as required by the Act, other Federal agencies and will be available to tribes and the general public upon request.

A request for comments on this information collection request appeared in the **Federal Register** on March 9, 2005 (70 FR 11687). No comments were received in response to the announcement.

Request for Comments

The Bureau of Indian Affairs requests you to send your comments on this collection to the two locations listed in the **ADDRESSES** section. Your comments should address:

(a) The necessity of this information collection for the proper performance of the functions of the agency, including whether the information will have practical utility;

(b) The accuracy of the agency's estimate of the burden (hours and cost) of the collection of information, including the validity of the methodology and assumptions used;

(c) Ways we could enhance the quality, utility and clarity of the information to be collected; and

(d) Ways we could minimize the burden of the collection of the information on the respondents, such as through the use of automated collection techniques or other forms of information technology.

Please note that an agency may not sponsor or request, and an individual need not respond to, a collection of information unless it has a valid OMB Control Number.

It is our policy to make all comments available to the public for review at the location listed in the **ADDRESSES** section, room 320–SIB, during the hours of 8 a.m. to 4 p.m., e.s.t., Monday through Friday, except for legal holidays. If you wish to have your name and/or address withheld, you must state this prominently at the beginning of your comments. We will honor your request according to the requirements of the

law. All comments from organizations or representatives will be available for review. We may withhold comments from review for other reasons.

OMB has up to 60 days to make a decision on the submission for renewal, but may make the decision after 30 days. Therefore, to receive the best consideration of your comments, you should submit them closer to 30 days than 60 days.

Information Collection Abstract

OMB Control Number: 1076–0147.

Type of review: Renewal.

Title: Department of the Interior, Bureau of Indian Affairs, Indian Service Population and Labor Force Estimates.

Brief Description of collection: The Office of Tribal Services contacted 10 of the 562 federally recognized Indian tribes. The 10 tribes contacted ranged in size from small (less than 500 members) to large tribes (more than 20,000 members). The estimated time it took each tribe to respond to the biennial report was between 1 hour and 4 days depending on the sophistication of the tribal government. All things considered, it takes each tribe an estimated 8 hours to complete the survey.

Respondents: American Indian Tribes.

Number of Respondents: 562.

Estimated Time per Response: 8 hours.

Frequency of Response: Biennially.

Total Annual Burden to Respondents: 4496 hours biennially.

Total Annual Cost to Respondents: N/A.

Dated: July 5, 2005.

Michael D. Olsen,

Acting Principal Deputy Assistant Secretary—Indian Affairs.

[FR Doc. 05–13761 Filed 7–12–05; 8:45 am]

BILLING CODE 4310–4J–P

DEPARTMENT OF THE INTERIOR

Bureau of Land Management

[WY–070–1232–DA]

Notice of Temporary Closure of Public Lands to Motorized Vehicle Use

AGENCY: Bureau of Land Management, Interior.

ACTION: Notice of temporary closure of certain public lands to all types of motor vehicle use in Sheridan County, Wyoming.

SUMMARY: Pursuant to 43 Code of Federal Regulations (CFR) Subpart 8364, the Bureau of Land Management (BLM) announces its intentions to temporarily close certain BLM-administered public lands to all types of motor vehicle use during the period of time the Buffalo Field Office develops, completes, and approves a management plan for recently acquired lands. These lands are hereafter referred to as ''Welch Management Area.'' This temporary closure is needed to protect public lands and resources from the effects of unauthorized use and motorized vehicle use of existing roads and two-track trails that were present when the land was transferred to the United States Government.

DATES: This temporary closure will be effective the date this notice is published in the **Federal Register** and will continue to either December 31, 2006, or when a management plan for the Welch Management Area is completed and approved, whichever comes first.

FOR FURTHER INFORMATION CONTACT: Chris Hanson, Buffalo Field Manager, or Jim Sparks, Assistant Field Manager, Buffalo Field Office, 1425 Fort Street, Buffalo, Wyoming 82834. Mr. Hanson and Mr. Sparks may also be contacted by telephone: (307) 684–1100.

SUPPLEMENTARY INFORMATION: The BLM-administered public lands affected by this closure include approximately 1,745 acres, more or less, in Sheridan County, Wyoming. These lands are:

T. 57 N., R. 84 W., 6th PM, Wyoming section 1, S½NE¼, SE¼NW¼, N½SW¼, SW¼SW¼; section 2, lots 2, 3, S½N½, S½; section 3, lots 3, 4, S½N½, N½S½, SE¼SE¼; section 4, lots 1 through 4, S½NE¼, SE¼NW¼, N½SE¼.

This area was known as ''the Welch lands'' and is further described in the Final Environmental Impact Statement for the Pittsburg and Midway Coal Mining Company Coal Exchange Proposal; (July 2003) and it's Record of Decision (November 2004). In exchange for Federal coal and other lands, the Welch lands were transferred to the United States Government from private ownership. Prior to the completion of the transfer, the area was subject to limited and controlled motorized vehicle use. The existing roads were neither constructed nor designed for unlimited vehicular traffic in all types of weather conditions.

Excessive use of the roads by motorized vehicles during wet weather conditions would be detrimental to the area and its associated natural resources. Soils in the area are highly erodible. Any motorized vehicular travel during certain conditions could greatly increase soil erosion and potentially increase sedimentation into the Tongue River, especially when off-road vehicles are used as the means of transport.

The BLM is in the process of developing a management plan for the area hereafter referred to as the Welch Management Area. The use of these lands; including use by motorized vehicles, will be addressed in the plan. During development of the management plan, the public will be invited to participate in its formation through their provision of comments and resource information.

Upon completion of the management plan, actions addressed in the plan will be implemented and the temporary closure will no longer be necessary. Maps of the planning area and information on land-use planning progress may be obtained from the Buffalo Field Office.

Main entry points to the area will be signed and posted as closed to travel by all types of motorized vehicles used by the public (*i.e.* any motorized vehicle including cars, trucks, sport utility vehicles, motorcycles, snowmobiles, all-terrain vehicles, etc.).

Information as to when the area would no longer be closed to motorized vehicular travel would be posted at the Buffalo Field Office. In addition, the BLM plans to announce the lifting of the closure through the media including but not limited to, announcement in local newspapers.

Temporary closure orders may be implemented as provided in 43 CFR, subparts 8341.2 and 8364.1. Violations of this closure are punishable by a fine not to exceed $1,000, and/or imprisonment; not to exceed 12 months.

Persons who are administratively exempt from this closure include: Any Federal, State or local officer or employee acting within the scope of their duties, members of any organized rescue or fire-fighting force in performance of an official duty, and any person holding written authorization from the Bureau of Land Management.

Dated: March 25, 2005.

Robert A. Bennett,

State Director.

[FR Doc. 05–13787 Filed 7–12–05; 8:45 am]

BILLING CODE 4310–22–P

DEPARTMENT OF JUSTICE

Antitrust Division

Notice Pursuant to the National Cooperative Research and Production Act of 1993—Advanced Electric Systems & Aerodynamics for Efficiency Improvement in Heavy Duty Trucks

Notice is hereby given that, on June 21, 2005, pursuant to Section 6(a) of the National Cooperative Research and Production Act of 1993, 15 U.S.C. 4301 *et seq.* (''the Act''), Advanced Electric Systems & Aerodynamics for Efficiency Improvements in Heavy Duty Trucks (''AES'') has filed written notifications simultaneously with the Attorney General and the Federal Trade Commission disclosing (1) the identities of the parties to the venture and (2) the nature and objectives of the venture. The notifications were filed for the purpose of involving the Act's provisions limiting the recovery of antitrust plaintiffs to actual damages under specified circumstances.

Pursuant to Section 6(b) of the Act, the identifies of the parties to the venture are: Caterpillar Inc., Peoria, IL; Emerson Electric Co., St. Louis, MO; and Engineered Machine Products, Inc., Escanaba, MI. The general area of AES's planned activity is to improve the fuel efficiency of heavy-duty trucks while in the ''long haul'' driving mode through improvements in cooling system performance, air system management, and advanced power management. The activities of this consortium project will be partially funded by an award from the U.S. Department of Energy/National Energy Technology Laboratory.

Dorothy B. Fountain,

Deputy Director of Operations, Antitrust Division.

[FR Doc. 05–13727 Filed 7–12–05; 8:45 am]

BILLING CODE 4410–11–M

DEPARTMENT OF JUSTICE

Antitrust Division

Notice Pursuant to the National Cooperative Research and Production Act of 1993—DVD Copy Control Association

Notice is hereby given that, on June 27, 2005, pursuant to Section 6(a) of the National Cooperative Research and Production Act of 1993, 15 U.S.C. 4301 *et seq.* (''the Act''), DVD Copy Control Association (''DVD CCA'') has filed written notifications simultaneously with the Attorney General and the Federal Trade Commission disclosing changes in its membership. The notifications were filed for the purpose of extending the Act's provisions limiting the recovery of antitrust plaintiffs to actual damages under specified circumstances. Specifically, Advance & Beyond Tech. Co., Ltd., Guandong, People's Republic of China; Aplus Technics Co., Ltd, Taipei Hsien, Taiwan; Cal-Comp Electronics (Thailand) Public Co., Ltd., Bangkok, Thailand; Chunglam Digital Co., Ltd., Gyunggi-do, Republic of Korea; Cosmic Digital Technology Ltd., Hong Kong, Hong Kong-China; Digital Moon Music + Video, Inc., Markham, Ontario, Canada; EnCentrus Systems, Inc., Pointe-Claire, Quebec, Canada; Enseo, Inc., Richardson, TX; Ever Best Industrial (H.K.), Limited, Hong Kong, Hong Kong-China; Favor Digital Technology Co., Ltd., Jiang Xi, People's Republic of China; Fly Ring Digital Technology, Ltd., Hong Kong, Hong Kong-China; Global Brands Manufacture, Ltd., Guangdong, People's Republic of China; Goodsino Technology Development, Ltd., Hong Kong, Hong Kong-China; Guang Zhou Gang Ju Electronics, Ltd., Guangdong, People's Republic of China; Hagiwara Electric Co., Ltd., Aichi, Japan; Harbour Team Technologies, Ltd., Shenzhen, People's Republic of China; Industrial Technology Research Institute, Hsinchu, Taiwan; Jabil Circuit Hong Kong, Ltd., Hong Kong, Hong Kong-China; Lynic Technology PLC, Slough, Berkshire, United Kingdom; Maxi World Technology, Limited, Hong Kong, Hong Kong-China; Micro-Star Int'l Co., Ltd., Taipei Hsien, Taiwan; MJTel Co., Ltd., Incheon, Republic of Korea; Onken Corporation, Tokyo, Japan; PHD Electronics Technology Company, Hong Kong, Hong Kong-China; Scientific-Atlanta, Inc., Lawrenceville, GA; Sea Star Industry Co., Ltd., Shenzhen, People's Republic of China; Shantou Hi-Tech Zone Indall Enterprise Co., Ltd., Guangdong, People's Republic of China; Shenzhen Sobon Digital Technology Dev. Co., Ltd., Shenzhen, People's Republic of China; Silicon Application Company, Limited, Shenzhen, People's Republic of China; TCL Technoly Electronics (HuiZhou) Co., Ltd., Guangdong, People's Republic of China; Tecobest Digital Ltd., Hong Kong, Hong Kong-China; UAV Corporation, Fort Mill, SC; and Winbase Electronics Co., Ltd., Guangdong, People's Republic of China have been added as parties to this venture.

Also, BK DGTEC Co., Ltd., Seoul, Republic of Korea; Digital & Digital, Inc., Seoul, Republic of Korea; Molino Networks, Inc., Santa Cruz, CA; OSM, LLC, Rochester, NY; and Ultra Source Technology Corp., Hong Kong, Hong Kong-China have withdrawn as parties to this venture. The following member has changed its name: Time Group, Ltd. to Granville Technology Group, Ltd., Burnley, Lancashire, United Kingdom.

No other changes have been made in either the membership or planned activity of the group research project. Membership in this group research project remains open, and DVD CCA intends to file additional written notification disclosing all changes in membership.

On April 11, 2001, DVD CCA filed its original notification pursuant to Section 6(a) of the Act. The Department of Justice published a notice in the **Federal Register** pursuant to Section 6(b) of the Act on August 3, 2001 (66 FR 40727).

The last notification was filed with the Department on March 29, 2005. A notice was published in the **Federal Register** pursuant to Section 6(b) of the Act on April 26, 2005 (70 FR 21443).

Dorothy B. Fountain,

Deputy Director of Operations, Antitrust Division.

[FR Doc. 05–13725 Filed 7–12–05; 8:45 am]

BILLING CODE 4410–11–M

DEPARTMENT OF JUSTICE

Antitrust Division

Notice Pursuant to the National Cooperative Research and Production Act of 1993—Flexible Display Center at Arizona State University

Notice is hereby given that, on June 17, 2005, pursuant to Section 6(a) of the National Cooperative Research and Production Act of 1993, 15 U.S.C. 4301 *et seq.* (''the Act''), Flexible Display Center at Arizona State University (''Center'') has filed written notifications simultaneously with the Attorney General and the Federal Trade Commission disclosing changes in its membership. The notifications were filed for the purpose of extending the Act's provisions limiting the recovery of antitrust plaintiffs to actual damages under specified circumstances. Specifically, General Dynamics Corporation, Falls Church, VA; Raytheon Company, Waltham, MA; and Surface Science Integration, Inc., Paradise Valley, AZ have been added as parties to this venture.

No other changes have been made in either the membership or planned activity of the group research project. Membership in this group research project remains open, and Center intends to file additional written

notification disclosing all changes in membership.

On March 3, 2005, Center filed its original notification pursuant to Section 6(a) of the Act. The Department of Justice published a notice in the **Federal Register** pursuant to Section 6(b) of the Act on March 25, 2005 (70 FR 15350).

Dorothy B. Fountain,

Deputy Director of Operations, Antitrust Division.

[FR Doc. 05–13728 Filed 7–12–05; 8:45 am]

BILLING CODE 4410–11—M

DEPARTMENT OF JUSTICE

Antitrust Division

Notice Pursuant to the National Cooperative Research and Production Act of 1993—Southwest Research Institute: Clean Diesel IV

Notice is hereby given that, on June 28, 2005, pursuant to Section 6(a) of the National Cooperative Research and Production Act of 1993, 15 U.S.C. 4301 *et seq.* (''the Act''), Southwest Research Institute: Clean Diesel IV (''SwRI: Clean Diesel IV'') has filed written notifications simultaneously with the Attorney General and the Federal Trade Commission disclosing changes in its membership. The notifications were filed for the purpose of extending the Act's provisions limiting the recovery of antitrust plaintiffs to actual damages under specified circumstances. Specifically, Toyota Motor Corporation, Aichi, Japan and its subsidiary, Hino Motors, Ltd., Tokyo, Japan have been added as parties to this venture.

No other changes have been made in either the membership or planned activity of the group research project. Membership in this group research project remains open, and SwRI: Clean Diesel IV intends to file additional written notification disclosing all changes in membership.

On April 6, 2004, SwRI: Clean Diesel IV filed its original notification pursuant to Section 6(a) of the Act. The Department of Justice published a notice in the **Federal Register** pursuant to Section 6(b) of the Act on May 10, 2004 (69 FR 25923).

The last notification was filed with the Department on March 31, 2005. A notice was published in the **Federal Register** pursuant to Section 6(b) of the Act on April 19, 2005 (70 FR 20401).

Dorothy B. Fountain,

Deputy Director of Operations, Antitrust Division.

[FR Doc. 05–13726 Filed 7–12–05; 8:45 am]

BILLING CODE 4410–11–M

DEPARTMENT OF LABOR

Employment and Training Administration

Proposed Information Collection Request Submitted for Public Comment and Recommendations; Data Collection and Reporting for Wagner-Peyser Act Funded Public Labor Exchange and Veterans' Employment and Training Service Funded Labor Exchange

ACTION: Notice.

SUMMARY: The Department of Labor, as part of its continuing effort to reduce paperwork and respondent burden, conducts a pre-clearance consultation program to provide the general public and Federal agencies with an opportunity to comment on proposed and/or continuing collections of information in accordance with the Paperwork Reduction Act of 1995 (PRA95) (44 U.S.C. 3506(c)(2)(A)). This program helps to ensure that requested data can be provided in the desired format, reporting burden (time and financial resources) is minimized, collection instruments are clearly understood, and the impact of collection requirements on respondents can be properly assessed. The Employment and Training Administration (ETA) and the Veterans' Employment and Training Service (VETS) are soliciting comments on revised reporting requirements for the Labor Exchange Reporting System (LERS). These changes are necessary to reflect program and service changes implemented under the Jobs for Veterans Act and include data elements necessary for assessing state progress against a set of common performance measures beginning July 1, 2005.

DATES: Submit comments on or before September 12, 2005.

ADDRESSES: Send comments to: Dr. Esther R. Johnson, Administrator, Performance and Technology Office, Employment and Training Administration, U.S. Department of Labor, 200 Constitution Avenue NW., Room S–5206, Washington, DC 20210; telephone: (202) 693–3420 (this is not a toll-free number); fax: (202) 693–3490; e-mail: *ETAperforms@dol.gov*.

FOR FURTHER INFORMATION CONTACT: Ms. Karen A. Staha, Performance and Technology Office, Employment and Training Administration, U.S. Department of Labor, 200 Constitution Avenue NW., Room S–5206, Washington, DC 20210; telephone: (202) 693–3420 (this is not a toll-free number); fax: (202) 693–3490; e-mail: *ETAperforms@dol.gov*.

Copies of the Paperwork Reduction Act Submission Package may be obtained directly at the Web site: *http://www.doleta.gov/performance/guidance/ombcontrolnumber.cfm*.

SUPPLEMENTARY INFORMATION:

I. Background

States submit quarterly performance data for the Wagner-Peyser-funded public labor exchange services through ETA 9002 reports and for Veterans' Employment and Training Services (VETS)-funded labor exchange services through VETS 200 reports. The Employment and Training (ET) Handbook No. 406 contains the report forms and provides instructions for completing these reports. The ET Handbook No. 406 contains a total of eight reports (ETA 9002 A, B, C, D, E; VETS 200 A, B, C). The ETA 9002 and VETS 200 reports collect data on individuals who receive core employment and workforce information services through the public labor exchange and VETS-funded labor exchange of the states' One-Stop delivery systems.

In 2001, under the President's Management Agenda, the Office of Management and Budget (OMB) and other Federal agencies developed a set of common performance measures to be applied to certain Federally-funded employment and training programs with similar strategic goals. As part of this initiative, ETA initially issued Training and Employment Guidance Letter (TEGL) 15–03 and has more recently issued TEGL 28–04, Common Measures Policy, which rescinded TEGL 15–03 and reflected updates to the policy. The value of implementing common measures is the ability to describe in a similar manner the core purposes of the workforce system—how many people found jobs; whether they kept their jobs; and what their earnings were. Multiple sets of performance measures have burdened states and grantees, as they are required to report performance outcomes based on varying definitions and methodologies. By minimizing the different reporting and performance requirements, implementing a set of common performance measures can facilitate the integration of service delivery, reduce barriers to cooperation among programs, and enhance the ability to assess the effectiveness and impact of the workforce investment system, including the performance of the system in serving individuals facing significant barriers to employment.

The common measures are an integral part of ETA's performance accountability system, and ETA will continue to collect from grantees the

data on program activities, participants, and outcomes that are necessary for program management and to convey full and accurate information on the performance of workforce programs to policymakers and stakeholders.

This revision to the LERS identifies a minimum level of information collection that is necessary to comply with Equal Opportunity requirements, holds states appropriately accountable for the Federal funds they receive, assesses progress against the common performance measures, and allows the Department to fulfill its oversight and management responsibilities.

The Employment and Training Administration is proposing similar changes to the reporting requirements for the Workforce Investment Act (WIA) title 1B and Trade Adjustment Assistance programs. Please note that ETA will seek comments regarding changes to information collection for these programs in separate **Federal Register** notices.

The following three adult common performance measures apply to the Wagner-Peyser Act and VETS-funded public labor exchange programs:

- Entered Employment
- Retention
- Six Months Earnings Increase

Implementation of common measures will involve the following modifications to the LERS:

- Registration year will be eliminated. States will track participant outcomes following the quarter in which the participant exited the program.
- States will track individuals as ''participants'' and ''exiters.''
- The measurement period for entry into employment will change to the first quarter following the quarter of exit.
- The measurement period for employment retention will change to both the second and third quarters following the quarter of exit.
- States will be required to calculate and report on six-month pre- to post-program earnings, a new measure for the Wagner-Peyser Act and VETS-funded public labor exchange programs.
- To integrate its employment and workforce information services, ETA and VETS will collect data on the provision of workforce information services to job seekers.
- ''Transitioning Service Member'' will be introduced as a covered category in accordance with the Jobs for Veterans Act, Public Law 107–288. States will be required to submit data regarding services to and outcomes for Transitioning Service Members.

The following modifications affect only the Wagner-Peyser Act funded program:

- States will be required to sub-aggregate outcome data for job seekers who receive workforce information services.
- States will no longer be required to collect and report on employer and job seeker customer satisfaction for Wagner-Peyser Act funded programs.

The following modifications affect only the VETS-funded programs:

- States will be required to report aggregate counts of participants who receive a Transitional Assistance Program (TAP) Workshop.
- ''Homeless Veteran'' will be introduced as a covered category in accordance with the Homeless Veterans' Comprehensive Assistance Act of 2001 (Pub. L. 107–95).
- States will be required to submit data on services and outcomes to homeless veteran job seekers only on the VETS 200 C report.

The ET Handbook No. 406, which contains the report forms and provides instructions for completing the ETA 9002 and the VETS 200 reports, has been modified to reflect these changes.

States will continue to submit performance information through the existing rolling-four quarters methodology. The first revised quarterly report, which includes common performance measures, will be due November 15, 2005. ETA and the states will negotiate expected levels of performance for the Wagner-Peyser-Act funded program beginning in Program Year 2006 (July 1, 2006), using information and outcomes from Program Year 2005 as a baseline.

II. Desired Focus of Comments

Currently, the Department is soliciting comments concerning the proposed revised collection of data for the Wagner-Peyser Act-funded public labor exchange and VETS-funded labor exchange in order to:

- Evaluate whether the proposed collection of information is necessary for the proper performance of the functions of the agency, including whether the information will have practical utility;
- Evaluate the accuracy of the agency's estimate of the burden of the proposed collection of information, including the validity of the methodology and assumptions used;
- Enhance the quality, utility, and clarity of the information to be collected; and
- Minimize the burden of the collection of information on those who are to respond, including through the use of appropriate automated, electronic, mechanical, or other technological collection techniques or other forms of information technology, *e.g.*, permitting electronic submissions of responses.

A copy of the proposed ICR can be obtained by contacting the office listed above in the addressee section of this notice.

III. Current Actions

Type of Review: Revision.

Agency: Department of Labor, Employment and Training Administration.

Title: Labor Exchange Reporting System (LERS).

OMB Number: 1205–0240.

Affected Public: State, local, or tribal Governments.

Cite/Reference/Form/etc: Wagner-Peyser Act (29 U.S.C. 49) and Jobs for Veterans Act (Pub. L. 107–288).

Total Respondents: 54 states and territories.

Frequency: Quarterly.

Total Responses: 1,728 submissions annually—each state submits reports each quarter.

Estimated Total Burden Hours:

Form/activity	Total respondents	Frequency	Total responses	Average time per response	Total annual burden hours
ETA 9002 A	54	Quarterly	216	346	74,641
ETA 9002 B	54	Quarterly	216	346	74,641
ETA 9002 C	54	Quarterly	216	346	74,641
ETA 9002 D	54	Quarterly	216	346	74,641
ETA 9002 E	54	Quarterly	216	21	4,536
VETS 200 A	54	Quarterly	216	346	74,641
VETS 200 B	54	Quarterly	216	346	74,641
VETS 200 C	54	Quarterly	216	346	74,641

Form/activity	Total respondents	Frequency	Total responses	Average time per response	Total annual burden hours
Totals	54		1,728		527,020

Total Burden Cost (capital/startup): $1,825,200.

Total Burden Cost (operating/maintaining): $17,128,164.

Comments submitted in response to this notice will be summarized and/or included in the request for OMB approval of the information collection request; they will also become a matter of public record.

Signed in Washington, DC, on June 7, 2005.

Emily Stover DeRocco,

Assistant Secretary for Employment and Training.

[FR Doc. 05–13711 Filed 7–12–05; 8:45 am]

BILLING CODE 4510–30–P

DEPARTMENT OF LABOR

Employment and Training Administration

Proposed Information Collection Request Submitted for Public Comment and Recommendations; Data Collection and Reporting for Workforce Investment Act Title 1B Programs

ACTION: Notice.

SUMMARY: The Department of Labor, as part of its continuing effort to reduce paperwork and respondent burden, conducts a pre-clearance consultation program to provide the general public and Federal agencies with an opportunity to comment on proposed and/or continuing collections of information in accordance with the Paperwork Reduction Act of 1995 (PRA95) [44 U.S.C. 3506(c)(2)(A)]. This program helps to ensure that requested data can be provided in the desired format, reporting burden (time and financial resources) is minimized, collection instruments are clearly understood, and the impact of collection requirements on respondents can be properly assessed. The Employment and Training Administration (ETA) is soliciting comments on the revised reporting requirements for the Workforce Investment Act (WIA) Management Information and Reporting System. These changes are necessary to include data elements necessary for tracking state progress against a set of common performance measures beginning July 1, 2005.

DATES: Submit comments on or before September 12, 2005.

ADDRESSES: Send comments to: Dr. Esther R. Johnson, Administrator, Performance and Technology Office, Employment and Training Administration, U.S. Department of Labor, 200 Constitution Avenue NW., Room S–5206, Washington, DC 20210; telephone: (202) 693–3420 (this is not a toll-free number); fax: (202) 693–3490; e-mail: *ETAperforms@dol.gov.*

FOR FURTHER INFORMATION CONTACT: Ms. Karen A. Staha, Performance and Technology Office, Employment and Training Administration, U.S. Department of Labor, 200 Constitution Avenue NW., Room S–5206, Washington, DC 20210; telephone: (202) 693–3420 (this is not a toll-free number); fax: (202) 693–3490; e-mail: *ETAperforms@dol.gov.*

Copies of the Paperwork Reduction Act Submission Package may be obtained directly at the Web site: *http://www.doleta.gov/performance/guidance/ombcontrolnumber.cfm.*

SUPPLEMENTARY INFORMATION:

I. Background

Each state administering a grant under the WIA adult, dislocated worker, and youth programs is required to submit quarterly (ETA 9090) and annual (ETA 9091) reports containing information related to levels of participation and performance outcomes for each program. In addition, each state submits a file of individual records on all participants who exit the programs, formally called the Workforce Investment Act Title I–B Standardized Record Data (WIASRD). These participant records are submitted once a year based on a July-to-June program period.

In 2001, under the President's Management Agenda, the Office of Management and Budget (OMB) and other Federal agencies developed a set of common performance measures to be applied to certain Federally-funded employment and training programs with similar strategic goals. As part of this initiative, ETA initially issued Training and Employment Guidance Letter (TEGL) 15–03 and has more recently issued TEGL 28–04, Common Measures Policy, which rescinded TEGL 15–03 and reflected updates to the policy.

The value of implementing a set of common performance measures is the ability to describe in a similar manner the core purposes of the workforce system—how many people found jobs; did they keep their jobs; and what were their earnings. Multiple sets of performance measures have burdened states and grantees as they are required to report performance outcomes based on varying definitions and methodologies. By minimizing the different reporting and performance requirements, implementing a set of common performance measures can facilitate the integration of service delivery, reduce barriers to cooperation among programs, and enhance the ability to assess the effectiveness and impact of the workforce investment system, including the performance of the system in serving individuals facing significant barriers to employment.

The common performance measures are an integral part of ETA's performance accountability system, and ETA will continue to collect from grantees the data on program activities, participants, and outcomes that are necessary for program management and to convey full and accurate information on the performance of workforce programs to policymakers and stakeholders.

This modification to the WIA Management Information and Reporting System identifies a minimum level of information collection that is necessary to comply with Equal Opportunity requirements, holds states appropriately accountable for the Federal funds they receive, assesses progress against the common performance measures, and allows the Department to fulfill its oversight and management responsibilities.

The Employment and Training Administration is proposing similar changes to the reporting requirements for labor exchange programs funded under the Wagner-Peyser Act and by the Veterans' Employment and Training Service and the Trade Adjustment Assistance program. Please note that ETA will seek comments regarding changes to the information collection for these programs in separate **Federal Register** notices.

The WIA performance accountability system, authorized by section 136 of WIA, establishes a set of performance measures, and states report outcomes against these measures on a quarterly and annual basis. States establish negotiated levels for each of the

measures, and these results are used by ETA for various purposes, including budget justifications, program reviews, and determination of exceeding performance or performance failure. These performance measures will continue to comprise the WIA performance accountability system.

Adult Performance Measures

The following three common performance measures apply to the WIA adult and dislocated worker programs:

- Entered Employment
- Retention
- Earnings Increase.

For the WIA adult and dislocated worker programs, the common performance measures will be incorporated into the WIA performance accountability system by adjusting the methodology for calculating the results. (The approach for the WIA youth program is different, and is discussed later in this notice.) The ETA proposes to implement changes to WIA reporting requirements beginning on July 1, 2005 (Program Year 2005) to be able to calculate the adult common measures for the WIA programs. Specific changes to the definitions include:

- The measurement period for employment retention measure will now include both the second and third quarters following the quarter of exit.
- States will now be required to calculate and report on six-months' pre- to post-program earnings for dislocated workers using the same methodology as the current WIA Adult earnings increase measure. The outcome will be expressed as a dollar amount, which reflects the difference between pre- and post-program earnings.

Although the definitions for the measures will be the same, states will continue to report performance outcomes for the WIA adult and dislocated worker programs separately. Additionally, states will continue to report outcomes for the credential measure and customer satisfaction.

Youth Performance Measures

The following three common performance measures apply to Youth programs:

- Placement in employment or education
- Degree or certificate attainment
- Literacy/numeracy gains measure

It is important to note that results for the above three measures are to be collected in addition to results for the current seven youth measures that are part of the WIA performance accountability system.

In PY 2005, ETA proposes to collect data necessary to calculate the placement in employment or education and degree or certificate attainment measures. ETA encourages states to collect and report data necessary to calculate the literacy/numeracy gains measure in PY 2005. States will be required to report the information on literacy/numeracy gains beginning in PY 2006. There are no new data elements required in order to report on the placement and employment or degree or certificate attainment measure.

In addition, a new data element, youth in foster care, has been added, which is consistent with ETA's new strategic vision for the delivery of youth services under WIA outlined in TEGL 3–04, ETA's New Strategic Vision for the Delivery of Youth Services Under the Workforce Investment Act (WIA).

Changes to Reporting Requirements

Revisions to the WIA reporting requirements are necessary to calculate the common performance measures. A few other revisions have been proposed to enhance ETA's management and oversight of the programs.

Changes to the *WIA Quarterly Report* include:

- Aggregate participant and exiter counts for adults who access self-service information and for adults who receive training services, individuals receiving services through National Emergency Grants (NEGs), and in-school and out-of-school youth participants.
- States will no longer be required to report on employer and job seeker customer satisfaction on a quarterly basis. This information will now be reported only on the WIA Annual Report.
- Additional reporting elements to capture outcomes for the youth common performance measures.
- Additional reporting elements to capture performance outcomes for participants served through NEGs.
- The reporting methodology for the WIA Quarterly Report now captures performance results for the most recent four quarter period; rather than only on a Program Year (PY) period (July-to-June).

Changes to the *WIA Annual Progress Report* include:

- A new section, Table H.1, to capture outcomes for the youth common measures.
- A revised Table M, Participation Levels, to report on adults who access self-services only. National Emergency Grant participant counts will not be included in the Annual Report.
- Table O includes a new section to capture outcomes for the youth common performance measures.

Changes to the *WIASRD* include:

- Revisions to definitions and specifications for capturing certain participant characteristics, such as equal opportunity data, eligible veterans' status, and employment status.
- Expansion of existing data collection on individuals who are homeless or offenders to the WIA adult program participants receiving intensive and training services.
- Addition of fields in the services section to capture receipt of disaster relief assistance, self-services, workforce information services, pre-vocational services, dates entered and completed training services, and type of training received.
- For youth, addition of a field that tracks whether the participant was enrolled in education, which is used to calculate the attainment of degree or certificate measure.
- Revisions to existing fields for the state to specify the method used to determine the individual's employment status in each of the first, second, third and fourth quarters after program exit.
- Change in definition in two fields for dislocated workers that tracked wages in the second and third quarters prior to the date of dislocation; these fields will now be used to track wages in the second and third quarters prior to participation to be able to calculate the six months earnings increase measure.
- Change in reporting instructions to indicate that states are required to report whether WIA participants were co-enrolled in the Trade Adjustment Assistance (TAA) or Wagner-Peyser Act programs.

II. Desired Focus of Comments

Currently, the Department is soliciting comments concerning the proposed revised information collection request (ICR) for Workforce Investment Act title IB programs in order to:

- evaluate whether the proposed collection of information is necessary for the proper performance of the functions of the agency, including whether the information will have practical utility;
- evaluate the accuracy of the agency's estimate of the burden of the proposed collection of information, including the validity of the methodology and assumptions used;
- enhance the quality, utility, and clarity of the information to be collected; and
- minimize the burden of the collection of information on those who are to respond, including through the use of appropriate automated, electronic, mechanical, or other technological collection techniques or other forms of information technology,

e.g., permitting electronic submissions of responses.

A copy of the proposed ICR can be obtained by contacting the office listed above in the addressee section of this notice.

III. Current Actions

Type of Review: Revision.

Agency: Department of Labor, Employment and Training Administration.

Title: Workforce Investment Act (WIA) Management Information and Reporting System.

OMB Number: 1205–0420.

Affected Public: State, local, or tribal Governments.

Cite/Reference: Workforce Investment Act of 1998 (Pub. L. 105–220) sections 136, 172, 185, and 189.

Total Respondents: 53 states and territories.

Frequency: Quarterly and Annual.

Estimated Total Burden Hours:

Form/activity	Total respondents	Average annual hours/respondent	Total annual burden/hours
WIASRD record	53 states	11,415	604,982
Quarterly summary report	53 states	640	33,920
Annual summary report	53 states	400	21,200
Customer satisfaction	53 states	925	49,043
Total	53 states	13,380	709,145

Total Burden Cost (capital/startup): $1,791,400.

Total Burden Cost (operating/maintaining): $22,237,916.

Comments submitted in response to this notice will be summarized and/or included in the request for OMB approval of the information collection request; they will also become a matter of public record.

Signed in Washington, DC, on July 6, 2005.

Emily Stover DeRocco,

Assistant Secretary for Employment and Training.

[FR Doc. E5–3693 Filed 7–12–05; 8:45 am]

BILLING CODE 4510–30–P

DEPARTMENT OF LABOR

Employment And Training Administration

Proposed Information Collection Request Submitted for Public Comment and Recommendations; Trade Act Participant Report (TAPR)

ACTION: Notice.

SUMMARY: The Department of Labor, as part of its continuing effort to reduce paperwork and respondent burden, conducts a preclearance consultation program to provide the general public and Federal agencies with an opportunity to comment on proposed and/or continuing collections of information in accordance with the Paperwork Reduction Act of 1995 (PRA95) [44 U.S.C. 3506(c)(2)(A)]. This program helps to ensure that requested data can be provided in the desired format, reporting burden (time and financial resources) is minimized, collection instruments are clearly understood, and the impact of collection requirements on respondents can be properly assessed. The Employment and Training Administration (ETA) is soliciting comments on revised reporting requirements for the Trade Adjustment Assistance (TAA) program. These changes are necessary to collect data to comply with the Trade Reform Act of 2002 and to be able to calculate a set of common performance measures of the outcomes achieved by the TAA program.

DATES: Submit comments on or before September 12, 2005.

ADDRESSES: Send comments to: Dr. Esther R. Johnson, Administrator, Performance and Technology Office, Employment and Training Administration, U.S. Department of Labor, 200 Constitution Avenue, NW., Room S–5206, Washington, DC 20210; telephone: (202) 693–3420 (this is not a toll-free number); fax: (202) 693–3490; e-mail: *ETAperforms@dol.gov.*

FOR FURTHER INFORMATION CONTACT: Ms. Karen A. Staha, Performance and Technology Office, Employment and Training Administration, U.S. Department of Labor, 200 Constitution Avenue, NW., Room S–5206, Washington, DC 20210; telephone: (202) 693–3420 (this is not a toll-free number); fax: (202) 693–3490; e-mail: *ETAperforms@dol.gov.*

Copies of the Paperwork Reduction Act Submission Package may be obtained directly at the Web site: *http://www.doleta.gov/performance/guidance/ombcontrolnumber.cfm.*

SUPPLEMENTARY INFORMATION:

I. Background

On June 16, 1998, the Office of Management and Budget (OMB) approved a Government Performance and Results Act (GPRA) compliant performance and participant outcomes data system for the TAA Program; this system was revised in 2000 and is known as the Trade Act Participant Report (TAPR). States implemented use of the TAPR beginning with the first quarter of the fiscal year 1999 (October through December, 1998), and have continued to collect and report data every quarter since then.

In 2001, under the President's Management Agenda, OMB and other Federal agencies developed a set of common performance measures to be applied to certain Federally-funded employment and training programs with similar strategic goals. As part of this initiative, ETA initially issued Training and Employment Guidance Letter (TEGL) 15–03 and has more recently issued TEGL 28–04, Common Measures Policy, which rescinded TEGL 15–03 and reflected updates to the policy. The value of implementing common measures is the ability to describe in a similar manner the core purposes of the workforce system—how many people found jobs; did they keep their jobs; and what were their earnings. Multiple sets of performance measures have burdened states and grantees as they are required to report performance outcomes based on varying definitions and methodologies. By minimizing the different reporting and performance requirements, implementing a set of common performance measures can facilitate the integration of service delivery, reduce barriers to cooperation among programs, and enhance the ability to assess the effectiveness and impact of the workforce investment system, including the performance of the system in serving individuals facing significant barriers to employment.

The common measures are an integral part of ETA's performance accountability system, and ETA will continue to collect from grantees the data on program activities, participants, and outcomes that are necessary for program management and to convey full and accurate information on the performance of workforce programs to policymakers and stakeholders.

This revision to the TAA program reporting system identifies a minimum level of information collection that is necessary to comply with Equal Opportunity requirements, holds states appropriately accountable for the Federal funds they receive, assesses progress against a set of common performance measures, and allows the Department to fulfill its oversight and management responsibilities.

The Employment and Training Administration is proposing similar changes to the reporting requirements for the Workforce Investment Act (WIA) title 1B and Wagner-Peyser Act programs. Please note that ETA will seek comments regarding changes to information collection for these programs in separate **Federal Register** notices.

The following three adult common performance measures apply to the TAA program:

- Entered Employment
- Employment Retention
- Six Months Earnings Increase

States are currently required to submit data according to measures established under the GPRA, which include entered employment, retention, and wage replacement. While the GPRA measures for TAA were similar to the common measures, the data elements that are needed to do the calculations are slightly different, requiring modifications to the definitions and record layout of the TAPR. Changes to the TAPR include:

- Addition of a field that tracks employment status at participation, because the entered employment rate under the common performance measures is calculated only for those participants who were not employed when they began participating in the program.
- Addition of a field that tracks the reason the individual exited the program, because individuals who exited due to certain reasons, such as becoming institutionalized, are excluded from calculations of common measures.
- Addition of a field tracking whether the individual was employed in the second quarter after program exit, which is used to calculate the retention rate measure.
- Addition of fields for the state to specify the method used to determine the individual's employment status in each of the first, second, and third quarters after program exit.
- Change in definition in two fields that tracked wages in the second and third quarters prior to separation under the GPRA measures; these fields will be used to track wages in the second and third quarters prior to participation to be able to calculate the six months earnings increase measure.
- Change in the field that tracks receipt of a training waiver from a yes/no field to one where one of the allowable reasons for granting a training waiver under the Trade Act of 2002 is specified.
- Change from one field that tracks whether the individual received basic Trade Readjustment Allowance (TRA), additional TRA, or both, to three fields where the number of weeks of each type of TRA is tracked. These fields will allow a closer look at whether the additional weeks of TRA provided under the Trade Act of 2002 are being utilized and whether they improve participant outcomes.
- Change in reporting instructions to indicate that states are required to report whether co-enrollment in Workforce Investment Act (WIA) or other partner programs has occurred for TAA program participants.

II. Desired Focus of Comments

Currently, the Department is soliciting comments concerning the revised information collection request for the TAA program in order to:

- Evaluate whether the proposed collection of information is necessary for the proper performance of the functions of the agency, including whether the information will have practical utility;
- Evaluate the accuracy of the agency's estimate of the burden of the proposed collection of information, including the validity of the methodology and assumptions used;
- Enhance the quality, utility, and clarity of the information to be collected; and
- Minimize the burden of the collection of information on those who are to respond, including through the use of appropriate automated, electronic, mechanical, or other technological collection techniques or other forms of information technology, *e.g.*, permitting electronic submissions of responses.

A copy of the proposed ICR can be obtained by contacting the office listed above in the addressee section of this notice.

III. Current Actions

Type of Review: Revision.

Agency: Department of Labor, Employment and Training Administration.

Title: Trade Act Participant Report (TAPR).

OMB Number: 1205–0392.

Recordkeeping: Three years for states.

Affected Public: State, local or tribal governments.

Cite/Reference/Form/etc: Trade Adjustment Assistance Reform Act of 2002, see table below for list of forms.

Total Respondents: 50 states.

Frequency: Quarterly.

Total Responses: 50 submissions annually—each state submits TAPR files each quarter.

Average Time per Response: 2.8 hours.

Estimated Total Burden Hours:

TAA burden	Annual national participants	Hours per TAPR record	Annual TAPR burden hours	Applicable hourly rate	Annual TAPR burden dollars
Data collection	30,000	0.3	9,000	$32.50	$292,500
TAPR submission	50	2.5	500	32.50	16,250
Total					308,750

Total Burden Cost (capital/startup): $0.

Total Burden Cost (operating/maintaining: $308,750.

Comments submitted in response to this notice will be summarized and/or included in the request for OMB approval of the information collection request; they will also become a matter of public record.

Signed in Washington, DC, on July 6, 2005.

Emily Stover DeRocco,

Assistant Secretary for Employment and Training.

[FR Doc. E5–3694 Filed 7–12–05; 8:45 am]

BILLING CODE 4510–30–P

NATIONAL AERONAUTICS AND SPACE ADMINISTRATION

[Notice 05–109]

NASA Aeronautics Research Advisory Committee, Airspace Systems Program Subcommittee; Meeting.

AGENCY: National Aeronautics and Space Administration

ACTION: Notice of meeting.

SUMMARY: The National Aeronautics and Space Administration announces a forthcoming meeting of the NASA Aeronautics Research Advisory Committee (ARAC), Airspace Systems Program Subcommittee (ASPS).

DATES: Wednesday, August 3, 2005, 9 a.m. to 5 p.m. and Thursday, August 4, 2005, 8:30 a.m. to 5 p.m.

ADDRESSES: Holiday Inn Washington-Capitol, 550 C Street, SW., Washington, DC; Room: Discovery II.

FOR FURTHER INFORMATION CONTACT: Mrs. Mary-Ellen McGrath, Aeronautics Research Mission Directorate, National Aeronautics and Space Administration, Washington, DC 20546, (202) 358–4729.

SUPPLEMENTARY INFORMATION: The meeting will be open to the public up to the seating capacity of the room. The agenda for the meeting is as follows:

—Opening Remarks
—Review of Joint Planning and Development Office (JPDO) Roadmap and R&D Requirements
—Review of Airspace Systems (AS) Program
—Comparative Analysis of the AS Program and the JPDO Requirements
—Discussion of the Airspace Systems Program
—Closing Comments

Attendees will be requested to sign a register. It is imperative that the meeting be held on these dates to accommodate the scheduling priorities of the key participants.

Dated: July 7, 2005.

P. Diane Rausch,

Advisory Committee Management Officer, National Aeronautics and Space Administration.

[FR Doc. 05–13802 Filed 7–12–05; 8:45 am]

BILLING CODE 7510–13–M

NATIONAL AERONAUTICS AND SPACE ADMINISTRATION

[Notice 05–110]

NASA Advisory Council, Aerospace Medicine and Occupational Health Advisory Committee

AGENCY: National Aeronautics and Space Administration (NASA).

ACTION: Notice of meeting.

SUMMARY: In accordance with the Federal Advisory Committee Act, Public Law 92–463, as amended, the National Aeronautics and Space Administration announces a meeting of the NASA Advisory Council, Aerospace Medicine and Occupational Health Advisory Committee.

DATES: Wednesday, August 10, 2005, 8:30 a.m. to 5 p.m.

ADDRESSES: National Aeronautics and Space Administration, 300 E Street, SW., Room 9H40, Washington, DC. Attendees must check in at the Visitor's Center located in the West Lobby (4th and E Streets).

FOR FURTHER INFORMATION CONTACT: Ms. Pamela Barnes, Mail Suite 5G35, National Aeronautics and Space Administration, Washington, DC, 20546, (202) 358–2390.

SUPPLEMENTARY INFORMATION: The meeting will be open to the public up to the seating capacity of the room. The agenda for the meeting is as follows:

—Opening Remarks by Chief Health and Medical Officer
—Aerospace Medicine and Occupational Health Advisory Committee Report from March 8, 2005, Meeting
—Aerospace Medicine Highlights and Issues
—Occupational Health Highlights and Issues
—Status Report of Independent Health and Medical Authority
—Open discussion and action assignments
—Closing Comments

Attendees will be requested to sign a register and to comply with NASA security requirements, including the presentation of a valid picture ID, before receiving an access badge. Foreign nationals attending this meeting will be required to provide the following information: Full name; gender; date/place of birth; citizenship; visa/green card information (number, type, expiration date); employer/affiliation information (name of institution, address, county, phone); and title/position of attendee. To expedite admittance, attendees can provide identifying information in advance by contacting Ms. Pamela R. Barnes via e-mail at *pamela.r.barnes@nasa.gov* or by telephone at (202) 358–2390. Persons with disabilities who require assistance should indicate this. It is imperative that the meeting be held on this date to accommodate the scheduling priorities of the key participants.

P. Diane Rausch,

Advisory Committee Management Officer, National Aeronautics and Space Administration.

[FR Doc. 05–13803 Filed 7–12–05; 8:45 am]

BILLING CODE 7510–13–M

NUCLEAR REGULATORY COMMISSION

[Docket No. 50–368]

Entergy Operations, Inc., Arkansas Nuclear One, Unit 2; Notice of Issuance of Renewed Facility Operating License No. NPF–6 for an Additional 20-Year Period

Notice is hereby given that the U.S. Nuclear Regulatory Commission (Commission) has issued Renewed Facility Operating License No. NPF–6 to Entergy Operations, Inc. (licensee), the operator of the Arkansas Nuclear One, Unit 2 (ANO–2). Renewed Facility Operating License No. NPF–6 authorizes operation of ANO–2 by the licensee at reactor core power levels not in excess of 3026 megawatts thermal (858 megawatts electric) in accordance with the provisions of the ANO–2 renewed license and its Technical Specifications.

The ANO–2 plant is a pressure water reactor located in Russellville, Arkansas.

The application for the renewed license complied with the standards and requirements of the Atomic Energy Act of 1954, as amended (the Act), and the Commission's regulations. As required by the Act and the Commission's regulations in Title 10 of the Code of Federal Regulations (10 CFR) Chapter 1, the Commission has made appropriate findings, which are set forth in the license. Prior public notice of the action involving the proposed issuance of the renewed license and of an opportunity for a hearing regarding the proposed issuance of this license was published in the **Federal Register** on November 24, 2003 (68 FR 65963).

For further details with respect to this action, see: (1) Entergy Operations, Inc.'s license renewal application for Arkansas Nuclear One, Unit 2, dated October 14, 2003, as supplemented by letters dated through May 2, 2005; (2) the Commission's safety evaluation report, NUREG–1828, dated June 20, 2005; (3) the licensee's updated safety analysis report; and (4) the Commission's final environmental impact statement, NUREG–1437, Supplement 19, for the Arkansas Nuclear One, Unit 2, dated April 22,

2005. These documents are available at the NRC's Public Document Room, One White Flint North, 11555 Rockville Pike, Rockville, Maryland 20852, and can be viewed from the NRC Public Electronic Reading Room at *http://www.nrc.gov/reading-rm/adams.html.*

Copies of Renewed Facility Operating License No. NPF–6, may be obtained by writing to the U.S. Nuclear Regulatory Commission, Washington, DC, 20555–0001, Attention: Director, Division of Regulatory Improvement Programs. Copies of the Arkansas Nuclear One, Unit 2 Safety Evaluation Report, NUREG–1828 and the final environmental impact statement, NUREG–1437, Supplement 19, may be purchased from the National Technical Information Service (NTIS), U.S. Department of Commerce, Springfield, VA 22161 (*http://www.ntis.gov*), 703–605–6000, or Attention: Superintendent of Documents, U.S. Government Printing Office, P.O. Box 371954, Pittsburgh, PA 15250–7954 (*http://www.gpoaccess.gov*), 202–512–1800. All orders should clearly identify the NRC publication number and the requestor's Government Printing Office deposit account number or VISA or MasterCard number and expiration date.

Dated at Rockville, Maryland, this 30th day of June, 2005.

For the Nuclear Regulatory Commission.

Pao-Tsin Kuo,

Program Director, License Renewal and Environmental Impacts Program, Division of Regulatory Improvement Programs, Office of Nuclear Reactor Regulation.

[FR Doc. 05–13723 Filed 7–12–05; 8:45 am]

BILLING CODE 7590–01–P

RAILROAD RETIREMENT BOARD

Actuarial Advisory Committee with Respect to the Railroad Retirement Account; Notice of Public Meeting

Notice is hereby given in accordance with Public Law 92–463 that the Actuarial Advisory Committee will hold a meeting on August 2, 2005, at 11 a.m., at the office of the Chief Actuary of the U.S. Railroad Retirement Board, 844 North Rush Street, Chicago, Illinois, on the conduct of the 23rd Actuarial Valuation of the Railroad Retirement System. The agenda for this meeting will include a discussion of the assumptions to be used in the 23rd Actuarial Valuation. A report containing recommended assumptions and the experience on which the recommendations are based will have been sent by the Chief Actuary to the Committee before the meeting.

The meeting will be open to the public. Persons wishing to submit written statements or make oral presentations should address their communications or notices to the RRB Actuarial Advisory Committee, c/o Chief Actuary, U.S. Railroad Retirement Board, 844 North Rush Street, Chicago, Illinois 60611–2092.

Dated: July 7, 2005.

Beatrice Ezerski,

Secretary to the Board.

[FR Doc. 05–13743 Filed 7–12–05; 8:45 am]

BILLING CODE 7905–01–M

SECURITIES AND EXCHANGE COMMISSION

Proposed Collection; Comment Request

Upon Written Request, Copies Available From: Securities and Exchange Commission, Office of Filings and Information Services, Washington, DC 20549

Extension:

Form N–8b–4, SEC File No. 270–180, OMB Control No. 3235–0247.

Notice is hereby given that, pursuant to the Paperwork Reduction Act of 1995 (44 U.S.C. 3501 *et seq.*) the Securities and Exchange Commission (''Commission'') is soliciting comments on the collection of information summarized below. The Commission plans to submit these existing collections of information to the Office of Management and Budget (''OMB'') for extension and approval.

• Form N–8b–4—Registration Statement of Face-Amount Certificate Companies

• Form N–8b–4 is the form used by face-amount certificate companies to comply with the filing and disclosure requirements imposed by section 8(b) of the Investment Company Act of 1940 (15 U.S.C. 80a–8(b)). Form N–8b–4 requires disclosure about the organization of a face-amount certificate company, its business and policies, its investment in securities, its certificates issued, the personnel and affiliated persons of the depositor, the distribution and redemption of securities, and financial statements. The Commission uses the information provided in the collection of information to determine compliance with section 8(b) of the Investment Company Act of 1940.

Based on the Commission's industry statistics, the Commission estimates that there would be approximately 1 annual filing on Form N–8b–4. The Commission estimates that each registrant filing a Form N–8b–4 would spend 171 hours in preparing and filing the Form and that the total hour burden for all Form N–8b–4 filings would be 171 hours. Estimates of the burden hours are made solely for the purposes of the PRA, and are not derived from a comprehensive or even a representative survey or study of the costs of SEC rules and forms.

The information provided on Form N–8b–4 is mandatory. The information provided on Form N–8b–4 will not be kept confidential. The Commission may not conduct or sponsor, and a person is not required to respond to, a collection of information unless it displays a currently valid OMB control number.

Written comments are invited on: (a) Whether the proposed collection of information is necessary for the proper performance of the functions of the agency, including whether the information will have practical utility; (b) the accuracy of the agency's estimate of the burden of the collection of information; (c) ways to enhance the quality, utility, and clarity of the information collected; and (d) ways to minimize the burden of the collection of information on respondents, including through the use of automated collection techniques or other forms of information technology. Consideration will be given to comments and suggestions submitted in writing within 60 days of this publication.

Please direct your written comments to R. Corey Booth, Director/Chief Information Officer, Office of Information Technology, Securities and Exchange Commission, 100 F Street, NE., Washington, DC 20549.

Dated: July 5, 2005.

J. Lynn Taylor,

Assistant Secretary.

[FR Doc. 05–13712 Filed 7–12–05; 8:45 am]

BILLING CODE 8010–01–P

SECURITIES AND EXCHANGE COMMISSION

Proposed Collection; Comment Request

Upon Written Request, Copies Available From: Securities and Exchange Commission, Office of Filings and Information Services, Washington, DC 20549.

Extension:

Rule 203A–2; SEC File No. 270–501; OMB Control No. 3235–0559.

Notice is hereby given that, pursuant to the Paperwork Reduction Act of 1995 (44 U.S.C. 3501 *et seq.*) (''PRA''), the Securities and Exchange Commission

(''Commission'') is soliciting comments on the collections of information summarized below. The Commission plans to submit these existing collections of information to the Office of Management and Budget (''OMB'') for extension and approval.

Rule 203A–2(f), which is entitled ''Internet Investment Advisers,'' exempts from the prohibition on Commission registration an Internet investment adviser who provides investment advice to all of its clients exclusively through computer software-based models or applications, termed under the rule as ''interactive websites.'' [1] These advisers generally would not meet the statutory thresholds set out in section 203A of the Advisers Act—they do not manage $25 million or more in assets and do not advise registered investment companies.[2] Eligibility under rule 203A–2(f) is conditioned on an adviser maintaining in an easily accessible place, for a period of not less than five years from the filing of Form ADV relying on the rule,[3] a record demonstrating that the adviser's advisory business has been conducted through an interactive website in accordance with the rule.

This record maintenance requirement is a ''collection of information'' for PRA purposes. The Commission believes that approximately 25 advisers are registered with the Commission under rule 203–2A(f), which involves a recordkeeping requirement manifesting in approximately four burden hours per year per adviser and results in an estimated 100 of total burden hours (4 × 25) for all advisers.

This collection of information is mandatory, as it is used by Commission staff in its examination and oversight program in order to determine continued Commission registration eligibility for advisers registered under this rule. Responses generally are kept confidential pursuant to section 210(b) of the Advisers Act.[4] Written comments are invited on: (a) Whether the proposed collection of information is necessary for the proper performance of the functions of the agency, including whether the information will have practical utility; (b) The accuracy of the agency's estimate of the burden of the collection of information; (c) Ways to enhance the quality, utility, and clarity of the information collected; and (d) Ways to minimize the burden of the collection of information on respondents, including through the use of automated collection techniques or other forms of information technology. Consideration will be given to comments and suggestions submitted in writing within 60 days of this publication.

Please direct your written comments to R. Corey Booth, Director/Chief Information Officer, Office of Information Technology, Securities and Exchange Commission, 100 F Street, NE., Washington, DC 20549.

Dated: June 29, 2005.

J. Lynn Taylor,

Assistant Secretary.

[FR Doc. 05–13715 Filed 7–12–05; 8:45 am]

BILLING CODE 8010–01–P

[1] 17 CFR 275.203A–2(f). Included in rule 203A–2(f) is a limited exception to the interactive website requirement which allows these advisers to provide investment advice to no more than 14 clients through other means on an annual basis. 17 CFR 275.203A–2(f)(1)(i). The rule also precludes advisers in a control relationship with the SEC-registered Internet adviser from registering with the Commission under the common control exemption provided by rule 203A–2(c) [17 CFR 275.203A–2(c)]. 17 CFR 275.203A–2(f)(1)(iii).

[2] 15 U.S.C. 80b–3a(a).

[3] The five-year record retention period is the same recordkeeping retention period for all advisers imposed under rule 204–2 of the Adviser Act. See rule 204–2 [17 CFR 275.204–2].

[4] 15 U.S.C. 80b–10(b).

SECURITIES AND EXCHANGE COMMISSION

Submission for OMB Review; Comment Request

Upon Written Request; Copies Available From: Securities and Exchange Commission, Office of Filings and Information Services, Washington, DC 20549.

Extension:

Regulation S–T; OMB Control No. 3235–0424; SEC File No. 270–375.

Notice is hereby given that, pursuant to the Paperwork Reduction Act of 1995 (44 U.S.C. 3501 *et seq.*), the Securities and Exchange Commission (''Commission'') has submitted to the Office of Management and Budget a request for extension of the previously approved collection of information discussed below.

Regulation S–T sets forth the general rules and regulations for electronic filings. Registrants who have to file electronically are the likely respondents. Regulation S–T is only assigned one burden hour for administrative convenience because it does not directly impose any information collection requirements. The electronic filing requirement is mandatory for all companies required to file electronically. All information provided to the Commission is available to the public for review.

An agency may not conduct or sponsor, and a person is not required to respond to, a collection of information unless it displays a currently valid control number.

Written comments regarding the above information should be directed to the following persons: (i) Desk Officer for the Securities and Exchange Commission, Office of Information and Regulatory Affairs, Office of Management and Budget, Room 10102 Executive Office Building, Washington, DC 20503 or send an e-mail to *David_Rostker@omb.eop.gov*; and (ii) R. Corey Booth, Director/Chief Information Officer, Office of Information Technology, Securities and Exchange Commission, 450 Fifth Street, NW., Washington DC 20549. Comments must be submitted to OMB within 30 days of this notice.

Dated: July 6, 2005.

J. Lynn Taylor,

Assistant Secretary.

[FR Doc. E5–3709 Filed 7–12–05; 8:45 am]

BILLING CODE 8010–01–P

SECURITIES AND EXCHANGE COMMISSION

Submission for OMB Review; Comment Request

Upon Written Request; Copies Available From: Securities and Exchange Commission, Office of Filings and Information Services, Washington, DC 20549.

Extension: Rule 236; OMB Control No. 3235–0095; SEC File No. 270–118.

Notice is hereby given that, pursuant to the Paperwork Reduction Act of 1995 (44 U.S.C. 3501 *et seq.*), the Securities and Exchange Commission (''Commission'') has submitted to the Office of Management and Budget a request for extension of the previously approved collection of information discussed below.

Rule 236 under the Securities Act of 1933 (''Securities Act'') requires issuers choosing to rely on an exemption from Securities Act registration for the issuance of fractional shares, scrip certificates or order forms, in connection with a stock dividend, stock split, reverse stock split, conversion, merger or similar transaction to furnish specified information to the Commission in writing at least ten days prior to the offering. The information is needed to provide public notice that an issuer is relying on the exemption. Public companies are the likely respondents. An estimated ten submissions are made pursuant to Rule 236 annually, resulting in an estimated annual total burden of 15 hours. The

information is needed to establish qualification for reliance on the exemption. The information provided by Rule 236 is required to obtain or retain benefits. All information provided to the Commission is available to the public for review upon request.

An agency may not conduct or sponsor, and a person is not required to respond to, a collection of information unless it displays a currently valid control number.

Written comments regarding the above information should be directed to the following persons: (i) Desk Officer for the Securities and Exchange Commission, Office of Information and Regulatory Affairs, Office of Management and Budget, Room 10102, New Executive Office Building, Washington, DC 20503 or send an e-mail to *David_Rostker@omb.eop.gov;* and

(ii) R. Corey Booth, Director/Chief Information Officer, Office of Information Technology, Securities and Exchange Commission, 450 Fifth Street, NW., Washington DC 20549. Comments must be submitted to OMB within 30 days of this notice.

Dated: July 6, 2005.

J. Lynn Taylor,

Assistant Secretary.

[FR Doc. E5–3710 Filed 7–12–05; 8:45 am]

BILLING CODE 8010–01–P

SECURITIES AND EXCHANGE COMMISSION

[Release No. 34–51975; File No. SR–Amex–2005–065]

Self-Regulatory Organizations; American Stock Exchange LLC; Notice of Filing and Immediate Effectiveness of Proposed Rule Change and Amendment No. 1 Thereto Relating to Odd-Lots in Nasdaq Securities

July 6, 2005.

Pursuant to Section 19(b)(1) of the Securities Exchange Act of 1934 (the ''Act''),[1] and Rule 19b–4 thereunder,[2] notice is hereby given that on June 16, 2005, the American Stock Exchange LLC (''Amex'' or ''Exchange'') filed with the Securities and Exchange Commission (''Commission'') the proposed rule change as described in Items I and II below, which Items have been prepared by Amex.[3] On June 28, 2005, Amex filed Amendment No. 1 to the proposed rule change.[4] The Exchange filed the proposed rule change pursuant to Section 19(b)(3)(A) of the Act[5] and Rule 19b–4(f)(6) thereunder,[6] which renders the proposed rule change effective upon filing with the Commission.[7] The Commission is publishing this notice to solicit comments on the proposed rule change, as amended, from interested persons.

I. Self-Regulatory Organization's Statement of the Terms of Substance of the Proposed Rule Change

Amex proposes to extend for an additional six-month period ending December 30, 2005, the Exchange's pilot program for odd-lot execution procedures for Nasdaq securities traded on the Exchange pursuant to unlisted trading privileges. There is no proposed rule text. Amex is making no changes to the pilot program as it currently operates, other than extending it through December 30, 2005.

II. Self-Regulatory Organization's Statement of the Purpose of, and Statutory Basis for, the Proposed Rule Change

In its filing with the Commission, Amex included statements concerning the purpose of and basis for the proposed rule change and discussed any comments it received on the proposed rule change. The text of these statements may be examined at the places specified in Item IV below. Amex has prepared summaries, set forth in Sections A, B, and C below, of the most significant aspects of such statements.

A. Self-Regulatory Organization's Statement of the Purpose of, and Statutory Basis for, the Proposed Rule Change

1. Purpose

The Commission approved, and the Exchange implemented, a pilot program for odd-lot order[8] executions in Nasdaq securities transacted on the Exchange pursuant to unlisted trading privileges. Paragraph (j) of Amex Rule 118 (''Trading in Nasdaq National Market Securities'') describes the Exchange's odd-lot execution procedures for Nasdaq securities, and Commentary .05 of Amex Rule 205 (''Manner of Executing Odd-Lot Orders'') references Amex Rule 118(j) odd-lot procedures. The pilot program was originally approved on August 2, 2002 for a six-month period,[9] and was extended four times, with the most recent extension due to expire on June 30, 2005.[10]

Under the Exchange's current pilot program, after the opening of trading in Nasdaq securities, odd-lot market orders and executable odd-lot limit orders are executed at the qualified national best bid or offer[11] at the time the order is received at the trading post or through Amex Order File. Odd-lot market orders and executable odd-lot limit orders entered before the opening of trading in Nasdaq securities are executed at the price of the first round-lot or part of round-lot transaction on the Exchange. Non-executable limit orders, stop orders, stop limit orders, orders filled after the close and non-regular way trades are executed in accordance with Amex Rule 205 A(2), A(3), A(4), C(1) and C(2), respectively. Orders to buy or sell ''at the close'' are filled at the price of the closing round-lot sale on the Exchange. In a locked market condition, odd-lot market orders and executable odd-lot limit orders are executed at the locked market price. In a crossed market condition, odd-lot market orders are

[1] 15 U.S.C. 78s(b)(1).

[2] 17 CFR 240.19b–4.

[3] The Commission has made minor technical changes to this notice with Amex's consent. Telephone conversation between Jan Woo, Attorney, Division of Market Regulation, Commission, and Laura Clare, Assistant General Counsel, Amex, dated July 5, 2005.

[4] Amendment No. 1 made technical and clarifying changes to the proposed rule change.

[5] 15 U.S.C. 78s(b)(3)(A).

[6] 17 CFR 240.19b–4(f)(6).

[7] The Exchange provided the Commission with written notice of its intention to file the proposed rule change on June 14, 2005. The Commission received the Exchange's submission, and asked the Exchange to file the instant proposed rule change, pursuant to Rule 19b–4(f)(6) under the Act. 17 CFR 240.19–4(f)(6).

[8] An odd-lot order is an order for less than 100 shares.

[9] *See* Securities Exchange Act Release No. 46304 (August 2, 2002), 67 FR 51903 (August 9, 2002)(SR–Amex–2002–56).

[10] *See* Securities Exchange Act Release Nos. 48174 (July 14, 2003), 68 FR 43409 (July 22, 2003)(SR–Amex–2003–56)(extending the pilot until December 27, 2003); 48995 (December 24, 2003), 68 FR 75670 (December 31, 2003)(SR–Amex–2003–102) (extending the pilot until June 27, 2004); 49855 (June 14, 2004), 69 FR 35399 (June 24, 2004)(SR–Amex–2004–30)(extending the pilot until December 27, 2004); and 50934 (December 27, 2004), 70 FR 412 (January 4, 2005)(SR–Amex–2004–108)(extending the pilot until June 30, 2005).

[11] In Amex Rule 118(j), the qualified national best bid and offer are defined as the highest bid and lowest offer, respectively, disseminated (A) by the Exchange or (B) by another market center participating in the Joint Self-Regulatory Organization Plan Governing the Collection, Consolidation and Dissemination of Quotation and Transaction Information for Nasdaq Listed Securities Traded on Exchanges on an Unlisted Trading Privileges Basis (''Plan''); provided, however, that the bid and offer in another such market center will be considered in determining the qualified national best bid or offer in a stock only if (i) the quotation conforms to the requirements of Amex Rule 127 (''Minimum Price Variations''), (ii) the quotation does not result in a locked or crossed market, (iii) the market center is not experiencing operational or system problems with respect to the dissemination of quotation information, and (iv) the bid or offer is ''firm,'' that is, members of the market center disseminating the bid or offer are not relieved of their obligations with respect to such bid or offer under paragraph (c)(2) of Rule 11Ac1–1 pursuant to the ''unusual market'' exception of paragraph (b)(3) of Rule 11Ac1–1 under the Act. 17 CFR 240.11Ac1–1.

executed at the mean of the bid and offer prices when the displayed national best bid is higher than the displayed national best offer by $.05 or less. When the displayed national best bid is higher than the displayed national best offer by more than $.05, odd-lot market orders are executed when the crossed market condition no longer exists. In addition, in a crossed market condition, executable odd-lot limit orders are executed at the crossed market bid price (in the case of an order to sell) or at the crossed market offer price (in the case of an order to buy). For example, if the bid and offer are 20.10 and 20.00, respectively, an executable odd-lot sell limit order priced at 20.10 or less will be executed at 20.10 and an executable odd-lot buy limit order priced at 20.00 or higher will be executed at 20.00.

The Exchange believes that the existing odd-lot execution procedures have operated efficiently. Furthermore, the Exchange has received no complaints from members or the public regarding odd-lot executions. Therefore, the Exchange seeks an extension to the pilot program for an additional six-month period ending December 30, 2005, providing the Exchange time to assess further enhancements to the odd-lot execution procedures.

2. Statutory Basis

The Exchange believes that the proposed rule change is consistent with Section 6(b) of the Act [12] in general and furthers the objectives of Section 6(b)(5) [13] in particular in that it is designed to prevent fraudulent and manipulative acts and practices, to promote just and equitable principles of trade, to foster cooperation and coordination with persons engaged in facilitating transactions in securities, to remove impediments to and perfect the mechanism of a free and open market and a national market system, to protect investors and the public interest and is not designed to permit unfair discrimination between customers, issuers, brokers, or dealers.

B. Self-Regulatory Organization's Statement on Burden on Competition

The Exchange does not believe that the proposed rule change will impose any burden on competition.

[12] 15 U.S.C. 78f(b).

[13] 15 U.S.C. 78f(b)(5).

C. Self-Regulatory Organization's Statement on Comments on the Proposed Rule Change Received From Members, Participants or Others

No written comments were solicited or received with respect to the proposed rule change.

III. Date of Effectiveness of the Proposed Rule Change and Timing for Commission Action

Because the foregoing proposed rule change: (1) Does not significantly affect the protection of investors or the public interest; (2) does not impose any significant burden on competition; and (3) by its terms does not become operative for 30 days after the date of this filing, or such shorter time as the Commission may designate if consistent with the protection of investors and the public interest, the proposed rule change has become effective pursuant to Section 19(b)(3)(A) [14] of the Act and Rule 19b–4(f)(6) thereunder.[15]

The Exchange requests that the Commission waive the 30-day operative delay, as specified in Rule 19b–4(f)(6)(iii),[16] and designate the proposed rule change to become operative immediately. The Commission believes that waiving the 30-day operative delay is consistent with the protection of investors and the public interest because such waiver would prevent the Amex's pilot program from expiring.[17]

At any time within 60 days of the filing of the amended proposed rule change, the Commission may summarily abrogate such rule change if it appears to the Commission that such action is necessary or appropriate in the public interest, for the protection of investors, or otherwise in furtherance of the purposes of the Act.[18]

IV. Solicitation of Comments

Interested persons are invited to submit written data, views, and arguments concerning the foregoing, including whether the proposed rule change, as amended, is consistent with the Act. Comments may be submitted by any of the following methods:

[14] 15 U.S.C. 78s(b)(3)(A).

[15] 17 CFR 240.19b–4(f)(6).

[16] 17 CFR 240.19b–4(f)(6)(iii).

[17] For purposes only of waiving the operative delay for this proposal, the Commission has considered the proposed rule's impact on efficiency, competition, and capital formation. *See* 15 U.S.C. 78c(f).

[18] The effective date of the original proposed rule is June 16, 2005. The effective date of Amendment No. 1 is June 28, 2005. For purposes of calculating the 60-day period within which the Commission may summarily abrogate the proposed rule change under Section 19(b)(3)(C) of the Act, the Commission considers the period to commence on June 28, 2005, the date on which Amex submitted Amendment No. 1. *See* 15 U.S.C. 78s(b)(3)(C).

Electronic Comments:

- Use the Commission's Internet comment form (*http://www.sec.gov/rules/sro.shtml*); or
- Send an e-mail to *rule-comments@sec.gov.* Please include File No. SR–Amex–2005–065 on the subject line.

Paper Comments

- Send paper comments in triplicate to Jonathan G. Katz, Secretary, Securities and Exchange Commission, Station Place, 100 F Street, NE., Washington, DC 20549–9303.

All submissions should refer to File Number SR–Amex–2005–065. This file number should be included on the subject line if e-mail is used. To help the Commission process and review your comments more efficiently, please use only one method. The Commission will post all comments on the Commissions Internet Web site (*http://www.sec.gov/rules/sro.shtml*). Copies of the submission, all subsequent amendments, all written statements with respect to the proposed rule change that are filed with the Commission, and all written communications relating to the proposed rule change between the Commission and any person, other than those that may be withheld from the public in accordance with the provisions of 5 U.S.C. 552, will be available for inspection and copying in the Commission's Public Reference Room. Copies of such filing also will be available for inspection and copying at the principal office of Amex. All comments received will be posted without change; the Commission does not edit personal identifying information from submissions. You should submit only information that you wish to make available publicly. All submissions should refer to File Number SR–NASD–2005–065 and should be submitted by August 3, 2005.

For the Commission, by the Division of Market Regulation, pursuant to delegated authority.[19]

J. Lynn Taylor,

Assistant Secretary.

[FR Doc. E5–3712 Filed 7–12–05; 8:45 am]

BILLING CODE 8010–01–P

[19] 17 CFR 200.30–3(a)(12).

SECURITIES AND EXCHANGE COMMISSION

[Release No. 34–51981; File No. SR–NASD–2005–079]

Self-Regulatory Organizations; National Association of Securities Dealers, Inc.; Notice of Filing of Proposed Rule Change to Provide for a 10-Day Notice Requirement Before a Party Issues a Subpoena to a Non-Party for Pre-Hearing Discovery

July 6, 2005.

Pursuant to Section 19(b)(1) of the Securities Exchange Act of 1934 (''Act'' or ''Exchange Act'')[1] and Rule 19b–4 thereunder,[2] notice is hereby given that on June 17, 2005, the National Association of Securities Dealers, Inc. (''NASD'') filed with the Securities and Exchange Commission (''SEC'' or ''Commission'') the proposed rule change as described in Items I, II, and III below, which Items have been prepared by NASD. The Commission is publishing this notice to solicit comments on the proposed rule change from interested persons.

I. Self-Regulatory Organization's Statement of the Terms of Substance of the Proposed Rule Change

NASD is proposing to amend the NASD Code of Arbitration Procedure (''Code'') primarily to provide for a 10-day notice requirement before a party issues a subpoena to a non-party for pre-hearing discovery.

Below is the text of the proposed rule change.[3] Proposed new language is in italics; proposed deletions are in brackets.

* * * * *

10322. Subpoenas and Power to Direct Appearances

(a) [Subpoenas]

The arbitrators and any counsel of record to the proceeding shall have the power of the subpoena process as provided by law. All parties shall be given a copy of a subpoena upon its issuance. Parties shall produce witnesses and present proofs to the fullest extent possible without resort to the subpoena process.] *To the extent possible, parties should produce documents and make witnesses available to each other without the use of subpoenas. Arbitrators and any counsel of record may issue subpoenas as provided by law.*

(b) No subpoenas seeking discovery shall be issued to or served upon non-parties to an arbitration unless, at least 10 days prior to the issuance or service of the subpoena, the party seeking to issue or serve the subpoena sends notice of intention to serve the subpoena, together with a copy of the subpoena, to all parties to the arbitration.

(c) If a subpoena is issued, the issuing party must cause a copy of the request or subpoena to be served on the same day to all parties and the entity receiving the subpoena.

(d) In the event a party receiving such a notice objects to the scope or propriety of the subpoena, that party shall, within 10 days of service of the notice, file with the Director, with copies to all other parties, written objections. The party seeking to issue or serve the subpoena may respond thereto. The arbitrator appointed pursuant to this Code shall rule promptly on the issuance and scope of the subpoena.

(e) In the event an objection to a subpoena is filed under paragraph (d), the subpoena may only be issued or served prior to the arbitrator's ruling if the party seeking to issue or serve the subpoena advises the subpoenaed party of the existence of the objection at the time the subpoena is served, and instructs the subpoenaed party that it should preserve the subpoenaed documents, but not deliver them until a ruling is made by the arbitrator.

(f) Paragraphs (b) and (d) above do not apply to subpoenas addressed to parties or non-parties to appear at a hearing before the arbitrators.

(g) The arbitrator(s) shall have the power to quash or limit the scope of any subpoena.

(b) [Power to Direct Appearances and Production of Documents]

(*h*) The arbitrator(s) shall be empowered without resort to the subpoena process to direct the appearance of any person employed or associated with any member of the Association and/or the production of any records in the possession or control of such persons or members. Unless the arbitrator(s) directs otherwise, the party requesting the appearance of a person or the production of documents under this Rule shall bear all reasonable costs of such appearance and/or production.

* * * * *

II. Self-Regulatory Organization's Statement of the Purpose of, and Statutory Basis for, the Proposed Rule Change

In its filing with the Commission, NASD included statements concerning the purpose of and basis for the proposed rule change and discussed any comments it received on the proposed rule change. The text of these statements may be examined at the places specified in Item IV below. NASD has prepared summaries, set forth in Sections (A), (B), and (C) below, of the most significant aspects of such statements.

(A) Self-Regulatory Organization's Statement of the Purpose of, and Statutory Basis for, the Proposed Rule Change

1. Purpose

The primary purpose of the proposed rule change is to provide for a 10-day notice requirement before a party issues a subpoena to a non-party for pre-hearing discovery.

Under Rule 10322(a) of the Code of Arbitration Procedure (''Code''), an arbitrator and any counsel of record to the arbitration has the power to issue a subpoena, as provided by law. In the course of preparing their cases, attorneys sometimes issue subpoenas to non-parties requesting the production of documents in advance of an arbitration hearing. For example, an investor's attorney might subpoena account records for other investors at a broker's firm, or a brokerage firm's attorney might subpoena records from the investor's cell phone company. Disputes regarding the propriety or scope of these subpoenas to non-parties occasionally arise, raising the issue of whether the subpoenaed materials should be produced. Currently, the Code does not contain any rules that specifically address the issuance of subpoenas to non-parties or the resolution of disputes involving such subpoenas.

In order to make the pre-hearing discovery process more orderly and efficient, NASD is proposing to revise the Code to provide for a 10-day notice requirement before a party issues a subpoena to a non-party for pre-hearing discovery.[4] Specifically, the rule will require parties seeking to subpoena discovery-related documents from a non-party to send, at least 10 days prior to the issuance or service of the subpoena, notice of their intention to serve the subpoena, along with a copy of the subpoena, to all parties to the

[1] 15 U.S.C. 78s(b)(1).

[2] 17 CFR 240.19b–4.

[3] 3 The rules proposed in this filing will be renumbered as appropriate following Commission approval of the proposed revisions to the NASD Code of Arbitration Procedure for Customer Disputes published for comment on June 23, 2005 (SEC Rel. No. 34–51856, 70 FR 36442); and the NASD Code of Arbitration Procedure for Industry Disputes published for comment on June 23, 2005 (SEC Rel. No. 34–51857, 70 FR 36430).

[4] The subpoena notice and objections provisions of the proposed rule will apply only to pre-hearing discovery and not to subpoenas pertaining to appearances before the panel.

arbitration. If any party receiving the notice objects to the scope or propriety of the subpoena, that party may, within 10 days of service of the notice, file a written objection with the Director of Arbitration and provide copies of the written objection to all other parties at the same time. Thereafter, the arbitrator responsible for deciding discovery-related motions will rule promptly on the issuance and scope of the subpoena. The arbitrator will have the authority to approve the issuance of a subpoena as well as to quash or limit the scope of any subpoena. In those situations where a panel has not yet been appointed, the rule will allow parties to issue a subpoena only if they advise a subpoenaed party of the existence of the objection at the time the subpoena is served and instruct the subpoenaed party to preserve, but not deliver, the subpoenaed documents until directed to do so by an arbitrator.

Lastly, the proposed rule will clarify the requirements regarding the service of subpoenas. Currently, Rule 10322(a) provides only that all parties are to be given a copy of a subpoena upon its issuance. The proposed rule will require a party that issues a subpoena to serve a copy of the subpoena to all parties and the entity receiving the subpoena on the same day.[5]

2. Statutory Basis

NASD believes that the proposed rule change is consistent with the provisions of Section 15A(b)(6) of the Act, which requires, among other things, that NASD's rules must be designed to prevent fraudulent and manipulative acts and practices, to promote just and equitable principles of trade, and, in general, to protect investors and the public interest. NASD believes that the proposed rule will make the arbitration pre-hearing discovery process more orderly and efficient, thereby improving the forum for all parties.

(B) Self-Regulatory Organization's Statement on Burden on Competition

NASD does not believe that the proposed rule change will result in any burden on competition that is not necessary or appropriate in furtherance of the purposes of the Act, as amended.

(C) Self-Regulatory Organization's Statement on Comments on the Proposed Rule Change Received From Members, Participants, or Others

Written comments were neither solicited nor received.

[5] Rule 10314(c) describes how service may be effected.

III. Date of Effectiveness of the Proposed Rule Change and Timing for Commission Action

Within 35 days of the date of publication of this notice in the **Federal Register** or within such longer period (i) as the Commission may designate up to 90 days of such date if it finds such longer period to be appropriate and publishes its reasons for so finding or (ii) as to which the self-regulatory organization consents, the Commission will:

(A) By order approve such proposed rule change, or

(B) Institute proceedings to determine whether the proposed rule change should be disapproved.

IV. Solicitation of Comments

Interested persons are invited to submit written data, views and arguments concerning the foregoing, including whether the proposed rule change is consistent with the Act. The proposed rule change is based upon, but not identical to, Rule 23(c) of the Uniform Code of Arbitration adopted by the Securities Industry Conference on Arbitration (the ''SICA Rule''). The Commission particularly urges commenters to consider the proposed rule change in light of the SICA Rule.

Specifically, the NASD proposal and the SICA Rule differ in whether service or delivery of a subpoena is required to be provided to all parties and the entity receiving the subpoena on the same day. As discussed above, the NASD proposal would require that a subpoena be served on the same day to all parties and the entity receiving the subpoena. Under existing NASD rules, service is accomplished on the date of mailing either by first-class mail or by means of overnight mail service or, in the case of other means of service, on the date of delivery.[6] The SICA Rule, however, requires that upon issuance of a subpoena, the subpoena must be sent in a ''manner that is reasonably expected to cause'' the subpoena to be delivered to all parties and the entity receiving the subpoena on the same day. What advantages or disadvantages, if any, are associated with the service requirement under NASD proposal versus the delivery requirement under the SICA Rule?

Comments may be submitted by any of the following methods:

Electronic Comments

- Use the Commission's Internet comment form (*http://www.sec.gov/rules/sro.shtml*); or
- Send an e-mail to *rule-comments@sec.gov.* Please include File Number SR–NASD–2005–079 on the subject line.

Paper Comments

- Send paper comments in triplicate to Jonathan G. Katz, Secretary, Securities and Exchange Commission, 100 F Street, NE., Washington, DC 20549–9303.

All submissions should refer to File Number SR–NASD–2005–079. This file number should be included on the subject line if e-mail is used. To help the Commission process and review your comments more efficiently, please use only one method. The Commission will post all comments on the Commission's Internet Web site (*http://www.sec.gov/rules/sro.shtml*). Copies of the submission, all subsequent amendments, all written statements with respect to the proposed rule change that are filed with the Commission, and all written communications relating to the proposed rule change between the Commission and any person, other than those that may be withheld from the public in accordance with the provisions of 5 U.S.C. 552, will be available for inspection and copying in the Commission's Public Reference Room, 100 F Street, NE., Washington, DC 20549. Copies of such filing will also be available for inspection and copying at the principal office of NASD. All comments received will be posted without change; the Commission does not edit personal identifying information from submissions. You should submit only information that you wish to make available publicly. All submissions should refer to the File Number SR–NASD–2005–079 and should be submitted on or before August 3, 2005.

For the Commission, by the Division of Market Regulation, pursuant to delegated authority.[7]

J. Lynn Taylor,

Assistant Secretary.

[FR Doc. E5–3711 Filed 7–12–05; 8:45 am]

BILLING CODE 8010–01–P

[6] NASD Rule 10314(c).

[7] 17 CFR 200.30–3(a)(12).

SECURITIES AND EXCHANGE COMMISSION

[File No. SR–Phlx–2005–37]

Securities Exchange Act of 1934; Release No. 51984/July 7, 2005; In the Matter of: The Philadelphia Stock Exchange, Inc.; Order of Summary Abrogation

Notice is hereby given that the Securities and Exchange Commission (''Commission''), pursuant to Section 19(b)(3)(C) of the Securities Exchange Act of 1934 (''Act''),[1] is summarily abrogating a proposed rule change of the Philadelphia Stock Exchange, Inc. (''Phlx'' or ''Exchange'').

On June 2, 2005, the Phlx filed SR–Phlx–2005–37. The proposed rule change modified the Phlx's schedule of dues, fees, and charges to revise its equity option payment for order flow program to establish a payment for order flow program that takes into account Directed Orders [2] pursuant to Exchange Rule 1080(l). Pursuant to Exchange Rule 1080(l), Exchange specialists, Streaming Quote Traders (''SQTs''),[3] and Remote Streaming Quote Traders (''RSQTs'') [4] trading on the Exchange's electronic options trading platform, Phlx XL, may receive Directed Orders from Order Flow Providers.[5] In addition, the Exchange's proposal modified the time periods during which the specialists, SQTs, and RSQTs must notify the Exchange in connection with their election to participate or not to participate in the Exchange's payment for order flow program. The filing was immediately effective upon filing with the Commission pursuant to Section 19(b)(3)(A) of the Act.[6]

Pursuant to Section 19(b)(3)(C) of the Act, at any time within 60 days of the date of filing of a proposed rule change pursuant to Section 19(b)(1) of the Act,[7] the Commission may summarily abrogate the change in the rules of the self-regulatory organization and require that the proposed rule change be refiled in accordance with the provisions of Section 19(b)(1) of the Act and reviewed in accordance with Section 19(b)(2) of the Act,[8] if it appears to the Commission that such action is necessary or appropriate in the public interest, for the protection of investors, or otherwise in furtherance of the purposes of the Act.

The Commission finds that it is appropriate in the public interest, for the protection of investors, and otherwise in furtherance of the purposes of the Act, to abrogate the proposed rule change.

It is therefore ordered, pursuant to Section 19(b)(3)(C) of the Act, that File No. SR–Phlx–2005–37 be, and it hereby is, summarily abrogated. If the Phlx chooses to refile the proposed rule change, it must do so pursuant to Sections 19(b)(1) and 19(b)(2) of the Act.

For the Commission, by the Division of Market Regulation, pursuant to delegated authority.[9]

J. Lynn Taylor,

Assistant Secretary.

[FR Doc. E5–3708 Filed 7–12–05; 8:45 am]

BILLING CODE 8010–01–P

[1] 15 U.S.C. 78s(b)(3)(C).

[2] The Exchange states that the term ''Directed Order'' means any customer order to buy or sell which has been directed to a particular specialist, Remote Streaming Quote Trader (defined below), or Streaming Quote Trader (defined below) by an Order Flow Provider (defined below). The provisions of Phlx Rule 1080(l) are in effect for a one-year pilot period to expire on May 27, 2006.

[3] The Exchange states that an SQT is an Exchange Registered Options Trader (''ROT'') who has received permission from the Exchange to generate and submit option quotations electronically through an electronic interface with AUTOM via an Exchange-approved proprietary electronic quoting device in eligible options to which such SQT is assigned. AUTOM is the Exchange's electronic order delivery, routing, execution, and reporting system, which provides for the automatic entry and routing of equity option and index option orders to the Exchange trading floor. *See* Exchange Rules 1014(b)(ii) and 1080.

[4] The Exchange states that an RSQT is an Exchange ROT that is a member or member organization of the Exchange with no physical trading floor presence who has received permission from the Exchange to generate and submit option quotations electronically through AUTOM in eligible options to which such RSQT has been assigned. An RSQT may only submit such quotations electronically from off the floor of the Exchange. An RSQT may only trade in a market making capacity in classes of options in which he is assigned. *See* Exchange Rule 1014(b)(ii)(B).

[5] The term ''Order Flow Provider'' means any member or member organization that submits, as agent, customer orders to the Exchange. *See* Exchange Rule 1080(l).

[6] 15 U.S.C. 78s(b)(3)(A).

[7] 15 U.S.C. 78s(b)(1).

[8] 15 U.S.C. 78s(b)(2).

[9] 17 CFR 200.30–3(a)(58).

SMALL BUSINESS ADMINISTRATION

[Disaster Declaration # 10134]

Maine Disaster # ME–00003

AGENCY: U.S. Small Business Administration.

ACTION: Notice.

SUMMARY: This is a Notice of the Presidential declaration of a major disaster for Public Assistance Only for the State of Maine (FEMA—1591—DR), dated 06/29/2005.

Incident: Severe Storms, Flooding, Snow Melt, and Ice Jams.

Incident Period: 03/29/2005 through 05/03/2005.

Effective Date: 06/29/2005.

Physical Loan Application Deadline Date: 08/29/2005.

ADDRESSES: Submit completed loan applications to: U.S. Small Business Administration, Disaster Area Office 3, 14925 Kingsport Road Fort Worth, TX 76155.

FOR FURTHER INFORMATION CONTACT: A. Escobar, Office of Disaster Assistance, U.S. Small Business Administration, 409 3rd Street, Suite 6050, Washington, DC 20416.

SUPPLEMENTARY INFORMATION: Notice is hereby given that as a result of the President's major disaster declaration on 06/29/2005, applications for Private Non-Profit organizations that provide essential services of a governmental nature may file disaster loan applications at the address listed above or other locally announced locations.

The following areas have been determined to be adversely affected by the disaster:

Primary Counties: Androscoggin, Franklin, Hancock, Kennebec, Knox, Lincoln, Oxford, Piscataquis, Somerset, Waldo, and Washington.

The Interest Rates are:

Other (Including Non-Profit Organizations) With Credit Available Elsewhere 4.750.

Businesses and Non-Profit Organizations Without Credit Available Elsewhere 4.000.

The number assigned to this disaster for physical damage is 10134

(Catalog of Federal Domestic Assistance Number 59008)

Herbert L. Mitchell,

Associate Administrator for Disaster Assistance.

[FR Doc. 05–13753 Filed 7–12–05; 8:45 am]

BILLING CODE 8025–01–P

SMALL BUSINESS ADMINISTRATION

Interest Rates

The Small Business Administration publishes an interest rate called the optional ''peg'' rate (13 CFR 120.214) on a quarterly basis. This rate is a weighted average cost of money to the government for maturities similar to the average SBA direct loan. This rate may be used as a base rate for guaranteed fluctuating interest rate SBA loans. This rate will be 4.625 (4 5/8) percent for the July–September quarter of FY 2005.

James E. Rivera,

Associate Administrator for Financial Assistance.

[FR Doc. 05–13754 Filed 7–11–05; 8:45 am]

BILLING CODE 8025–01–P

SMALL BUSINESS ADMINISTRATION

National Advisory Board, Small Business Development Center, Public Meeting

The U.S. Small Business Administration, National Advisory Board of the Office of Small Business Development Centers, will be hosting a public meeting via conference call to discuss such matters that may be presented by members, the staff of the U.S. Small Business Administration, or interested others. The conference will take place on Tuesday, July 19, 2005 at 1 p.m. eastern standard time.

Anyone wishing to participate or make an oral presentation to the Board must contact Erika Fischer, Senior Program Analyst, U.S. Small Business Administration, Office of Small Business Development Centers, 409 3rd Street, SW., Washington, DC 20416, telephone (202) 205–7045 or fax (202) 481–0681.

Matthew K. Becker,

Committee Management Officer.

[FR Doc. 05–13757 Filed 7–12–05; 8:45 am]

BILLING CODE 8025–01–P

DEPARTMENT OF STATE

[Public Notice 5134]

Culturally Significant Objects Imported for Exhibition Determinations: ''Cezanne in Provence''

AGENCY: Department of State.

ACTION: Notice.

SUMMARY: Notice is hereby given of the following determinations: Pursuant to the authority vested in me by the Act of October 19, 1965 (79 Stat. 985; 22 U.S.C. 2459), Executive Order 12047 of March 27, 1978, the Foreign Affairs Reform and Restructuring Act of 1998 (112 Stat. 2681, *et seq.*; 22 U.S.C. 6501 note, *et seq.*), Delegation of Authority No. 234 of October 1, 1999, Delegation of Authority No. 236 of October 19, 1999, as amended, and Delegation of Authority No. 257 of April 15, 2003 [68 FR 19875], I hereby determine that the objects to be included in the exhibition ''Cezanne in Provence'', imported from abroad for temporary exhibition within the United States, are of cultural significance. The objects are imported pursuant to loan agreements with the foreign owners or custodians. I also determine that the exhibition or display of the exhibit objects at the National Gallery of Art, from on or about January 29, 2006, until on or about May 7, 2006, and at possible additional venues yet to be determined, is in the national interest. Public Notice of these Determinations is ordered to be published in the **Federal Register**.

FOR FURTHER INFORMATION CONTACT: For further information, including a list of the exhibit objects, contact Richard Lahne, Attorney-Adviser, Office of the Legal Adviser, U.S. Department of State (telephone: 202/453–8058). The address is U.S. Department of State, SA–44, 301 4th Street, SW., Room 700, Washington, DC 20547–0001.

Dated: July 7, 2005.

C. Miller Crouch,

Principal Deputy Assistant Secretary for Educational and Cultural Affairs, Department of State.

[FR Doc. 05–13797 Filed 7–12–05; 8:45 am]

BILLING CODE 4710–08–P

DEPARTMENT OF STATE

[Public Notice 5102]

Announcement of Meetings of the International Telecommunication Advisory Committee

SUMMARY: The International Telecommunication Advisory Committee announces various meetings of the ITAC Study Groups for the remainder of the calendar year in preparation for technical and advisory group meetings of the International Telecommunication Union, Telecommunication Standardization Sector (ITU–T), and the OAS Inter American Telecommunication Commission (CITEL). Members of the public will be admitted to the extent that seating is available, and may join in the discussions, subject to the instructions of the Chair.

The International Telecommunication Advisory Committee (ITAC) will meet to prepare for ITU–T Study Group 3, Charging and Accounting Principles, on Thursday, July 28; Wednesday, August 17; and August 24, 2005, both from 2–4 p.m. in the Washington, DC metro area. Directions to the meeting location and conference bridge information (if any) may be obtained from Julian Minard: *minardje@state.gov*.

The International Telecommunication Advisory Committee (ITAC) will meet to prepare for ITU–T Study Group 17, Security, by e-mail between July 29 and August 3 and between September 5 and 10, 2005. An additional SG17 preparatory meeting will be held in the Washington, DC area on Thursday August 11, 2005. Access to these meetings may be arranged by contacting Julian Minard at *minardje@state.gov*.

The International Telecommunication Advisory Committee (ITAC) will meet to prepare for the ITU–T Advisory Group on Thursday, September 8; Thursday September 29; and Thursday, October 13, 2005, all from 2–4 p.m. Access to these meetings may be arranged by contacting Julian Minard at *minardje@state.gov*.

The International Telecommunication Advisory Committee (ITAC) will meet to prepare for the meeting of CITEL Permanent Consultative Committee I, Telecommunication Standardization, on Friday, July 29, from 9 a.m. –noon, and Tuesday, August 16, from 2–4 p.m. Access to these meetings may be arranged by contacting Julian Minard at *minardje@state.gov*.

The International Telecommunication Advisory Committee (ITAC) will meet to prepare for the meeting of the CITEL Permanent Executive Committee (COM/CITEL) on Wednesday, September 7; Wednesday, October 12; Wednesday, November 16; and Wednesday, November 30, all from 2–4 p.m. Access to these meetings may be arranged by contacting Julian Minard at *minardje@state.gov*.

Dated: July 6, 2005.

Anne Jillson,

Foreign Affairs Officer, International Communications & Information Policy, Department of State.

[FR Doc. 05–13789 Filed 7–12–05; 8:45 am]

BILLING CODE 4710–07–P

DEPARTMENT OF STATE

[Public Notice 5101]

U.S. Advisory Commission on Public Diplomacy; Notice of Meeting

The U.S. Advisory Commission on Public Diplomacy will hold a meeting at the U.S. Department of State at 2201 C Street, NW., Washington, DC on July 21, 2005 at 10 a.m to 11 a.m. The Commissioners will discuss public diplomacy issues with senior officials of the department.

The Commission was reauthorized pursuant to Pub. L. 106–113 (H.R. 3194, Consolidated Appropriations Act, 2000). The U.S. Advisory Commission on Public Diplomacy is a bipartisan Presidentially appointed panel created by Congress in 1948 to provide oversight of U.S. Government activities intended to understand, inform and influence foreign publics. The Commission reports its findings and recommendations to the President, the Congress and the Secretary of State and the American people. Current Commission members include Barbara M. Barrett of Arizona, who is the Chairman; Harold Pachios of Maine;

Ambassador Penne Percy Korth of Washington, DC; Ambassador Elizabeth Bagley of Washington, DC; Charles ''Tre'' Evers of Florida; Jay T. Snyder of New York; and Maria Sophia Aguirre of Washington, DC.

For more information, please contact Athena Katsoulos at (202) 203–7880.

Dated: July 6, 2005.

Athena Katsoulos,

Executive Director, Advisory Commission on Public Diplomacy, Department of State.

[FR Doc. 05–13788 Filed 7–12–05; 8:45 am]

BILLING CODE 4710–11–P

DEPARTMENT OF TRANSPORTATION

Office of the Secretary

Aviation Proceedings, Agreements Filed the Week Ending June 24, 2005

The following Agreements were filed with the Department of Transportation under the provisions of 49 U.S.C. 412 and 414. Answers may be filed within 21 days after the filing of the application.

Docket Number: OST–2005–21689.

Date Filed: June 22, 2005.

Parties: Members of the International Air Transport Association.

Subject: Passenger Agency Conference held in Singapore on 07–09 June 2005.

Adopted Resolutions for Expedited Implementation.

Intended effective date: 1 August 2005.

Andrea M. Jenkins,

Program Manager, Docket Operations, Federal Register Liaison.

[FR Doc. 05–13786 Filed 7–12–05; 8:45 am]

BILLING CODE 4910–62–P

DEPARTMENT OF TRANSPORTATION

Federal Aviation Administration

Change Notice for RTCA Program Management Committee

AGENCY: Federal Aviation Administration (FAA), DOT.

ACTION: Notice of RTCA Program Management Committee meeting.

SUMMARY: The FAA is issuing this notice to advise the public of a meeting of the RTCA Program Management Committee.

DATES: The meeting will be held August 3, 2005 starting at 9 a.m.

ADDRESSES: The meeting will be held at RTCA, Inc., 1828 L Street, NW., Suite 805, Washington, DC 20036.

FOR FURTHER INFORMATION CONTACT: RTCA Secretariat, 1828 L Street, NW., Suite 850, Washington, DC 20036; telephone (202) 833–9339; fax (202) 833–9434; Web site *http://www.rtca.org.*

SUPPLEMENTARY INFORMATION: Pursuant to section 10(a)(2) of the Federal Advisory Committee Act (Pub. L. 92–463, 5 U.S.C., Appendix 2), notice is hereby given for a Program Management Committee meeting. The revised agenda will include:

- August 3:
- Opening Session (Welcome and Introductory Remarks, Review/Approve Summary of Previous Meeting)
- Publication Consideration/Approval:
- Final Draft, Revised DO–224A, Signal-in-Space Minimum Aviation System Performance Standards (MASPS) for Advanced VHF Digital Data Communications Including Compatibility and Digital Voice Techniques, RTCA Paper No. 114–05/PMC–397, prepared by SC–172.
- Final Draft, Revised DO–272, User Requirements for Aerodrome Mapping Information, RTCA Paper No. 129–05/PMC–400, prepared by SC–193.
- Final Draft, Revised DO–276, User Requirements for Terrain and Obstacle Data, RTCA Paper No. 130–05/PMC–401, prepared by SC–193.
- Discussion:
- SC–205—Software Considerations in Airborne Systems and Equipment Certification.
- Discuss/Approve revised Terms of Reference for additional work to modify RTCA DO–278—Guidelines for Communications, Navigation, Surveillance and Air Traffic Management Systems Software Integrity Assurance.
- PMC Membership Review
- Special Committee chairman's Reports
- Action Item Review:
- Review Status—All open action items
- Closing Session (Other Business, Document Production, Date and Place of Next Meeting, Adjourn)

Attendance is open to the interested public but limited to space availability. With the approval of the chairmen, members of the public may present oral statements at the meeting. Persons wishing to present statements or obtain information should contact the person listed in the **FOR FURTHER INFORMATION CONTACT** Seciton. Members of the public may present a written statement to the committee at any time.

Issued in Washington, DC, on July 8, 2005.

Natalie Ogletree,

FAA General Engineer, RTCA Advisory Committee.

RTCA Program Management Committee

Date: August 3, 2005.

Time: 9 a.m.

Place: RTCA, Inc., 1828 L Street, NW., Suite 805, Washington, DC 20036.

Agenda

1. Welcome and Introductions
2. Review/Approve Summary of April 7, 2005 PMC Meeting
3. Publication Consideration/Approval
   A. Final Draft, Revised DO–224A, Signal-in-Space Minimum Aviation System Performance Standards (MASPS) for Advanced VHF Digital Data Communications Including Compatibility with Digital Voice Techniques, RTCA Paper No. 114–05/PMC–397, prepared by SC–172.
   B. Final Draft, Revised DO–272, User Requirements for Aerodrome Mapping Information, RTCA Paper No. 129–05/PMC–400, prepared by SC–193.
   C. Final Draft, Revised DO–276, User Requirements for Terrain and Obstacle Data, RTCA Paper No. 130–05/PMC–401, prepared by SC–193.
4. Discussion
   A. SC–205—Software Considerations in Airborne Systems and Equipment Certification.
   —Discuss/Approve revised Terms of Reference for additional work to modify RTCA DO–278—Guidelines for Communications, Navigation, Surveillance, and Air Traffic Management Systems Software Integrity Assurance.
   B. PMC Membership Review
   C. Special Committee Chairman's Reports.
5. Action Item Review
6. Other Business
7. Document Production and PMC Meeting Schedule

[FR Doc. 05–13764 Filed 7–12–05; 8:45 am]

BILLING CODE 4910–13–M

DEPARTMENT OF TRANSPORTATION

Federal Aviation Administration

RTCA Special Committee 172: Future Air-Ground Communications in the Very High Frequency (VHF) Aeronautical Data Band (118–137 MHz)

AGENCY: Federal Aviation Administration (FAA), DOT.

ACTION: Notice of RTCA Special Committee 172 meeting.

SUMMARY: The FAA is issuing this notice to advise the public of a meeting of RTCA Special Committee 172: Future Air-Ground Communications in the VHF Aeronautical Data Band (118–137 MHz).

DATES: The meeting will be held July 18–21, 2005 from 9 a.m. to 5 p.m.

ADDRESSES: The meeting will be held at RTCA, Inc., 1828 L Street, NW., Suite 805, Washington, DC 20036.

FOR FURTHER INFORMATION CONTACT: RTCA Secretariat, 1828 L Street, SW., Washington, DC 20036; telephone (202) 833–9339; fax (202) 833–9434; Web site *http://www.rtca.org.*

SUPPLEMENTARY INFORMATION: Pursuant to section 10(a)(2) of the Federal Advisory Committee Act (Pub. L. 92–463, 5 U.S.C., Appendix 2), notice is hereby given for a Special Committee 172 meeting. The agenda will include:

- July 18:
- Opening Plenary Session (Welcome and Introductory Remarks, Review of Agenda, Review Summary of Previous Meeting)
- Resolve FRAC comments on draft DO–186B, Minimum Operational Performance Standards For Airborne Radio Communications Equipment Operating Within The Radio Frequency Range 117.975–137.000 MHz
- Resolve FRAC comments on draft DO–271C, Minimum Operational Performance Standards for Aircraft VDL Mode 3 Transceiver Operating in the Frequency Range 117.975–137.000 MHz
- Resolve FRAC comments on draft DO–281A, MINIMUM OPERATIONAL PERFORMANCE STANDARDS FOR AIRCRAFT VDL MODE 2 PHYSICAL, LINK, AND NETWORK LAYER
- July 19:
- Continue with resolution of FRAC comments on remaining draft DO–186B, DO–271C, DO–281A
- July 20:
- Continue with resolution of FRAC comments on remaining draft DO–186B, DO–271C. DP–281A (if needed)
- July 21:
- Continue with resolution of FRAC comments on remaining draft DO–186B, DO–271C, DO–281A (if needed)
- Closing Plenary Session (Other Business, Final Comments, Date and Place of Next Meeting, Adjourn)

Attendance is open to the interested public but limited to space availability. With the approval of the chairmen, members of the public may present oral statements at the meeting. Persons wishing to present statements or obtain information should contact the person listed in the **FOR FURTHER INFORMATION CONTACT** section. Members of the public may present a written statement to the committee at any time.

Issued in Washington, DC, on July 7, 2005.

Natalie Ogletree,

FAA General Engineer, RTCA Advisory Committee.

Fifty-Fourth Meeting: Special Committee SC–172, Future Air-Ground Communications in the VHF Aeronautical Data Band (118–137 MHz)

Date: July 18–21, 2005.

Times: 9 a.m.–5 p.m.

Place: RTCA, Inc., 1828 L St. NW., Suite 805, Washington, DC 20036.

Agenda

Monday, July 18, 2005

1. Plenary, Introductions, Remarks and Accept Agenda.

2. Review the 53rd Plenary Summary.

3. Resolve FRAC comments on draft DO–186B, Minimum Operational Performance Standards for Airborne Radio Communications Equipment Operating Within the Radio Frequency Range 117.975–137.000 MHz.

4. Resolve FRAC comments on draft DO–271C, Minimum Operational Performance Standards for Aircraft VDL Mode 3 Transceiver Operating in the Frequency Range 117.975–137.000 MHz.

5. Resolve FRAC comments on draft DO–281A, Minimum Operational Performance Standards for Aircraft VDL Mode 2 Physical, Link, and Network Layer

Tuesday, July 19, 2005

6. Continue with resolution of FRAC comments on remaining draft DO–186B, DO–271C, DO–281A.

Wednesday, July 20, 2005

7. Continue with resolution of FRAC comments on remaining draft DO–186B, DO–271C, DO–281A (if needed).

Thursday, July 21, 2005

8. Continue with resolution of FRAC comments on remaining draft DO–186B, DO–271C, DO–281A (if needed).

9. Other business.

10. Final comments and thank you to all who participated in SC–172.

11. Adjournment of SC–172.

[FR Doc. 05–13763 Filed 7–12–05; 8:45 am]

BILLING CODE 4910–13–M

DEPARTMENT OF TRANSPORTATION

National Highway Traffic Safety Administration

[Docket No. NHTSA–2005–21784]

Trends in the Static Stability Factor of Passenger Cars, Light Trucks, and Vans Technical Report

AGENCY: National Highway Traffic Safety Administration (NHTSA), Department of Transportation.

ACTION: Request for comments on technical report.

SUMMARY: This notice announces NHTSA's publication of a technical report evaluating the changes over time in static stability factor in passenger vehicles. The report's title is: *Trends in the Static Stability Factor of Passenger Cars, Light Trucks, and Vans.*

DATES: Comments must be received no later than November 10, 2005.

ADDRESSES: *Report:* The entire report is available on the Internet for viewing online in HTML and PDF format at *http://www.nhtsa.dot.gov/cars/rules/regrev/evaluate/809868/pages/index.html.* You may also obtain copies of the reports free of charge by sending a self-addressed mailing label to Marie C. Walz (NPO–131), National Highway Traffic Safety Administration, 400 Seventh Street, SW., Washington, DC 20590.

Comments: You may submit comments [identified by DOT DMS Docket Number NHTSA–2005–21784] by any of the following methods:

- Web site: *http://dms.dot.gov.* Follow the instructions for submitting comments on the DOT electronic docket site.
- Fax: 1–202–493–2251.
- Mail: Docket Management Facility; U.S. Department of Transportation, 400 Seventh Street, SW., Nassif Building, Room PL–401, Washington, DC 20590–001.
- Hand Delivery: Room PL–401 on the plaza level of the Nassif Building, 400 Seventh Street, SW., Washington, DC, between 9 a.m. and 5 p.m., Monday through Friday, except Federal Holidays.

You may call Docket Management at 202–366–9324 and visit the Docket from 10 a.m. to 5 p.m., Monday through Friday.

FOR FURTHER INFORMATION CONTACT: Marie Walz, Evaluation Division, NPO–131, National Center for Statistics and Analysis, National Highway Traffic Safety Administration, Room 5208, 400 Seventh Street, SW., Washington, DC 20590. Telephone: 202–366–5377. FAX:

202–366–2559. E-mail: *mailto: MWalz@nhtsa.dot.gov*.

For information about NHTSA's evaluations of the effectiveness of existing regulations and programs: Visit the NHTSA Web site at *http://www.nhtsa.dot.gov/cars/rules/regrev/evaluate.*

SUPPLEMENTARY INFORMATION: Rollover crashes kill more than 10,000 occupants of passenger vehicles each year. As part of its mission to reduce fatalities and injuries, since model year 2001 NHTSA has included rollover information as part of its New Car Assessment Program ratings. One of the primary means of assessing rollover risk is the static stability factor (SSF), a measurement of a vehicle's resistance to rollover. The higher the SSF, the lower the rollover risk. This report tracks the trend in SSF over time, looking in particular at changes in various passenger vehicle types.

Data are presented for average SSFs by vehicle type over a number of model years. Passenger cars, as a group, have the highest average SSF, and these have remained high. SUVs have substantially improved their SSF values over time, especially after model year 2000, whereas those of pickup trucks have remained consistent over the years. Minivans showed considerable improvement since they were first introduced, while full-size vans showed a small but steady improvement. In model year 2003, the sales-weighted average SSF was 1.41 for passenger cars, 1.17 for SUVs, 1.18 for pickup trucks, 1.24 for minivans, and 1.12 for full-size vans.

How Can I Influence NHTSA's Thinking on This Subject?

NHTSA welcomes public review of the technical report and invites reviewers to submit comments about the data and the statistical methods used in the analyses. NHTSA will submit to the Docket a response to the comments and, if appropriate, additional analyses that supplement or revise the technical report.

How Do I Prepare and Submit Comments?

Your comments must be written and in English. To ensure that your comments are correctly filed in the Docket, please include the Docket number of this document (NHTSA–2005–21784) in your comments.

Your primary comments must not be more than 15 pages long (49 CFR 553.21). However, you may attach additional documents to your primary comments. There is no limit on the length of the attachments.

Please send two paper copies of your comments to Docket Management, submit them electronically, or fax them. The mailing address is U. S. Department of Transportation Docket Management, Room PL–401, 400 Seventh Street, SW., Washington, DC 20590. If you submit your comments electronically, log onto the Dockets Management System Web site at *http://dms.dot.gov* and click on ''Help'' to obtain instructions. The fax number is 1–202–493–2251.

We also request, but do not require you to send a copy to Marie Walz, Evaluation Division, NPO–131, National Highway Traffic Safety Administration, Room 5208, 400 Seventh Street, SW., Washington, DC 20590 (alternatively, FAX to 202–366–2559 or e-mail to *MWalz@nhtsa.dot.gov*). She can check if your comments have been received at the Docket and she can expedite their review by NHTSA.

How Can I Be Sure That My Comments Were Received?

If you wish Docket Management to notify you upon its receipt of your comments, enclose a self-addressed, stamped postcard in the envelope containing your comments. Upon receiving your comments, Docket Management will return the postcard by mail.

How Do I Submit Confidential Business Information?

If you wish to submit any information under a claim of confidentiality, send three copies of your complete submission, including the information you claim to be confidential business information, to the Chief Counsel, NCC–01, National Highway Traffic Safety Administration, Room 5219, 400 Seventh Street, SW., Washington, DC 20590. Include a cover letter supplying the information specified in our confidential business information regulation (49 CFR Part 512).

In addition, send two copies from which you have deleted the claimed confidential business information to Docket Management, Room PL–401, 400 Seventh Street, SW., Washington, DC 20590, or submit them electronically.

Will the Agency Consider Late Comments?

In our response, we will consider all comments that Docket Management receives before the close of business on the comment closing date indicated above under **DATES**. To the extent possible, we will also consider comments that Docket Management receives after that date.

Please note that even after the comment closing date, we will continue to file relevant information in the Docket as it becomes available. Further, some people may submit late comments. Accordingly, we recommend that you periodically check the Docket for new material.

How Can I Read the Comments Submitted by Other People?

You may read the comments by visiting Docket Management in person at Room PL–401, 400 Seventh Street, SW., Washington, DC from 10 a.m. to 5 p.m., Monday through Friday.

You may also see the comments on the Internet by taking the following steps:

A. Go to the Docket Management System (DMS) Web page of the Department of Transportation (*http://dms.dot.gov*).

B. On that page, click on ''Simple Search.''

C. On the next page ((*http://dms.dot.gov/search/searchFormSimple.cfm/*) type in the five-digit Docket number shown at the beginning of this Notice (21784). Click on ''Search.''

D. On the next page, which contains Docket summary information for the Docket you selected, click on the desired comments. You may also download the comments.

Authority: 49 U.S.C. 30111, 30168; delegation of authority at 49 CFR 1.50 and 501.8.

Dennis Utter,

Acting Associate Administrator for the National Center for Statistics and Analysis.

[FR Doc. 05–13714 Filed 7–12–05; 8:45 am]

BILLING CODE 4910–59–P

DEPARTMENT OF THE TREASURY

Submission for OMB Review; Comment Request

July 5, 2005.

The Department of Treasury has submitted the following public information collection requirement(s) to OMB for review and clearance under the Paperwork Reduction Act of 1995, Public Law 104–13. Copies of the submission(s) may be obtained by calling the Treasury Bureau Clearance Officer listed. Comments regarding this information collection should be addressed to the OMB reviewer listed and to the Treasury Department Clearance Officer, Department of the Treasury, Room 11000, 1750 Pennsylvania Avenue, NW., Washington, DC 20220.

DATES: Written comments should be received on or before August 12, 2005 to be assured of consideration.

Internal Revenue Service (IRS)

OMB Number: 1545–1488.

Regulation Project Number: REG–209837–96 Final.

Type of Review: Extension.

Title: Requirements Respecting the Adoption or Change of Accounting Method; Extensions of Time to Make Elections.

Description: The regulations provide the standards the Commissioner will use to determine whether to grant an extension of time to make certain elections.

Respondents: Business and other for-profit, Individuals or households, not-for-profit institutions, farms.

Estimated Number of Respondents: 500.

Estimated Burden Hours Respondent: 10 hours.

Frequency of Response: On occasion.

Estimated Total Reporting Burden: 5,000 hours.

Clearance Officer: Glenn P. Kirkland, (202) 622–3428, Internal Revenue Service, Room 6516, 1111 Constitution Avenue, NW., Washington, DC 20224.

OMB Reviewer: Alexander T. Hunt, (202) 395–7316, Office of Management and Budget, Room 10235, New Executive Office Building, Washington, DC 20503.

Lois K. Holland,

Treasury PRA Clearance Officer.

[FR Doc. 05–13746 Filed 7–12–05; 8:45 am]

BILLING CODE 4830–01–P

DEPARTMENT OF THE TREASURY

Submission for OMB Review; Comment Request

July 7, 2005.

The Department of Treasury has submitted the following public information collection requirement(s) to OMB for review and clearance under the Paperwork Reduction Act of 1995, Public Law 104–13. Copies of the submission(s) may be obtained by calling the Treasury Bureau Clearance Officer listed. Comments regarding this information collection should be addressed to the OMB reviewer listed and to the Treasury Department Clearance Officer, Department of the Treasury, Room 11000, 1750 Pennsylvania Avenue, NW., Washington, DC 20220.

DATES: Written comments should be received on or before August 12, 2005, to be assured of consideration.

Internal Revenue Service (IRS)

OMB Number: 1545–1005.

Regulation Project Number: PS–62–87 Final.

Type of Review: Extension.

Title: Low-Income Housing Credit for Federally-Assisted Buildings.

Description: The rule requires the taxpayer (low-income building owner) to seek a waiver in writing from the IRS concerning low-income buildings acquired during a special 10-year period in order to avert a claim against a Federal mortgage insurance fund.

Respondents: Business and other for-profit, individuals or households, not-for-profit institutions, Federal government, State, local or tribal government.

Estimated Number of Respondents: 1,000.

Estimated Burden Hours Respondent: 3 hours.

Frequency of Response: On occasion.

Estimated Total Reporting Burden: 3,000 hours.

Clearance Officer: Glenn P. Kirkland, (202) 622–3428, Internal Revenue Service, Room 6516, 1111 Constitution Avenue, NW., Washington, DC 20224.

OMB Reviewer: Alexander T. Hunt, (202) 395–7316, Office of Management and Budget, Room 10235, New Executive Office Building, Washington, DC 20503.

Lois K. Holland,

Treasury PRA Clearance Officer.

[FR Doc. 05–13747 Filed 7–12–05; 8:45 am]

BILLING CODE 4830–01–P

Federal Register

Wednesday,
July 13, 2005

Part II

Environmental Protection Agency

40 CFR Parts 85, 86, et al.

Test Procedures for Testing Highway and Nonroad Engines and Omnibus Technical Amendments; Final Rule

ENVIRONMENTAL PROTECTION AGENCY

40 CFR Parts 85, 86, 89, 90, 91, 92, 94, 1039, 1048, 1051, 1065, and 1068

[AMS–FRL–7922–5]

RIN 2060–AM35

Test Procedures for Testing Highway and Nonroad Engines and Omnibus Technical Amendments

AGENCY: Environmental Protection Agency (EPA).

ACTION: Final Rule.

SUMMARY: This regulation revises and harmonizes test procedures from the various EPA programs for controlling engine emissions. It does not change emission standards, nor is it intended to change the emission reductions expected from these EPA programs. Rather, it amends the regulations that describe laboratory specifications for equipment and test fuels, instructions for preparing engines and running tests, calculations for determining final emission levels from measured values, and instructions for running emission tests using portable measurement devices outside the laboratory. These updated testing regulations currently apply to land-based nonroad diesel engines, land-based nonroad spark-ignition engines over 19 kilowatts, and recreational vehicles. The revisions in this final rule will update the regulations to deal more effectively with the more stringent standards recently promulgated by EPA and will also clarify and better define certain elements of the required test procedures. In particular, the amendments better specify the procedures applicable to field testing under the regulations.

This action also applies the updated testing regulations to highway heavy-duty diesel engine regulations. This action is appropriate because EPA has historically drafted a full set of testing specifications for each vehicle or engine category subject to emission standards as each program was developed over the past three decades. This patchwork approach has led to some variation in test parameters across programs, which we hope to address by adopting a common set of test requirements. The primary goal of this effort is to create unified testing requirements for all engines, which when implemented will streamline laboratory efforts for EPA and industry.

This action will also include other technical changes intended to clarify and better define requirements for several different EPA engine programs. These changes are relatively minor and are technical in scope.

DATES: This final rule is effective September 12, 2005.

The incorporation by reference of certain publications listed in this regulation is approved by the Director of the Federal Register as of September 12, 2005.

ADDRESSES: EPA has established a docket for this action under Docket ID No. OAR–2004–0017. All documents in the docket are listed in the EDOCKET index at *http://www.epa.gov/edocket.* Although listed in the index, some information is not publicly available, *i.e.*, CBI or other information whose disclosure is restricted by statute. Certain other material, such as copyrighted material, is not placed on the Internet and will be publicly available only in hard copy form. Publicly available docket materials are available either electronically in EDOCKET or in hard copy at the Air Docket in the EPA Docket Center, EPA/DC, EPA West, Room B102, 1301 Constitution Ave., NW., Washington, DC. The Public Reading Room is open from 8:30 a.m. to 4:30 p.m., Monday through Friday, excluding legal holidays. The telephone number for the Public Reading Room is (202) 566–1744, and the telephone number for the Air Docket is (202) 566–1742.

FOR FURTHER INFORMATION CONTACT: Alan Stout, U.S. EPA, Voice-mail (734) 214–4636; E-mail: *stout.alan@epa.gov.*

SUPPLEMENTARY INFORMATION:

A. Regulated Entities

This action affects companies that manufacture or sell engines. Regulated categories and entities include:

Category	NAICS codes [a]	Examples of potentially regulated entities
Industry	333618 ...	Manufacturers of new engines.

[a] North American Industry Classification System (NAICS)

This list is not intended to be exhaustive, but rather provides a guide regarding entities likely to be regulated by this action. To determine whether particular activities may be regulated by this action, you should carefully examine the regulations. You may direct questions regarding the applicability of this action to the person listed in **FOR FURTHER INFORMATION CONTACT.**

B. How Can I Get Copies of This Document and Other Related Information?

1. Docket. EPA has established an official public docket for this action under Docket ID No. OAR–2004–0017. The official public docket consists of the documents specifically referenced in this action, any public comments received, and other information related to this action. Although a part of the official docket, the public docket does not include Confidential Business Information (CBI) or other information whose disclosure is restricted by statute. Documents in the official public docket are listed in the index list in EPA's electronic public docket and comment system, EDOCKET. Documents may be available either electronically or in hard copy. Electronic documents may be viewed through EDOCKET. Hard copy documents may be viewed at the EPA Docket Center, (EPA/DC) EPA West, Room B102, 1301 Constitution Ave., NW., Washington, DC. Docket in The EPA Docket Center Public Reading Room is open from 8:30 a.m. to 4:30 p.m., Monday through Friday, excluding legal holidays. The telephone number for the Public Reading Room is (202) 566–1744.

This rule relies in part on information related to our November 2002 final rule, which can be found in Public Docket A–2000–01. This docket is incorporated by reference into the docket for this action, OAR–2004–0017.

2. Electronic Access. You may access this **Federal Register** document electronically through the EPA Internet under the ''**Federal Register**'' listings at *http://www.epa.gov/fedrgstr/* Or you can go to the federal-wide eRulemaking site at *www.regulations.gov.*

An electronic version of the public docket is available through EDOCKET. You may use EDOCKET at *http://www.epa.gov/edocket/* to view public comments, access the index listing of the contents of the official public docket, and to access those documents in the public docket that are available electronically. Once in the system, select ''search,'' then key in the appropriate docket identification number.

Table of Contents

I. Modified Test Procedures for Highway and Nonroad Engines
  A. Incorporation of Nonroad Test Procedures for Heavy Duty Highway Engines
  B. Revisions to Part 1065
II. Technical Amendments
  A. Standard-Setting Changes that Apply to Multiple Categories

B. Nonroad general compliance provisions (40 CFR part 1068)
C. Land-based nonroad diesel engines (40 CFR parts 89 and 1039)
D. Marine diesel engines (40 CFR part 94)
E. Small nonroad spark-ignition engines (40 CFR part 90)
F. Marine spark-ignition engines (40 CFR part 91)
G. Large nonroad spark-ignition engines (40 CFR part 1048)
H. Recreational vehicles (40 CFR part 1051)
I. Locomotives (40 CFR part 92)
J. Highway engines and vehicles (40 CFR part 86)
III. Public Participation
IV. Statutory and Executive Order Reviews
V. Statutory Provisions and Legal Authority

I. Modified Test Procedures for Highway and Nonroad Engines

A. Incorporation of Nonroad Test Procedures for Heavy Duty Highway Engines

As part of our initiative to update the content, organization and writing style of our regulations, we are revising our test procedures.[1] We have grouped all of our engine dynamometer and field testing test procedures into one part entitled, ''Part 1065: Test Procedures.'' For each engine or vehicle sector for which we have recently promulgated standards (such as land-based nonroad diesel engines or recreational vehicles), we identified an individual part as the standard-setting part for that sector. These standard-setting parts then refer to one common set of test procedures in part 1065. We intend in this rule to continue this process of having all our engine programs refer to a common set of procedures by applying part 1065 to all heavy-duty highway engines.

In the past, each engine or vehicle sector had its own set of testing procedures. There are many similarities in test procedures across the various sectors. However, as we introduced new regulations for individual sectors, the more recent regulations featured test procedure updates and improvements that the other sectors did not have. As this process continued, we recognized that a single set of test procedures would allow for improvements to occur simultaneously across engine and vehicle sectors. A single set of test procedures is easier to understand than trying to understand many different sets of procedures, and it is easier to move toward international test procedure harmonization if we only have one set of test procedures. We note that procedures that are particular for different types of engines or vehicles, for example, test schedules designed to reflect the conditions expected in use for particular types of vehicles or engines, will remain separate and will be reflected in the standard-setting parts of the regulations.

In addition to reorganizing and rewriting the test procedures for improved clarity, we are making a variety of changes to improve the content of the testing specifications, including the following:

- Writing specifications and calculations in international units
- Adding procedures by which manufacturers can demonstrate that alternate test procedures are equivalent to specified procedures.
- Including specifications for new measurement technology that has been shown to be equivalent or more accurate than existing technology; procedures that improve test repeatability, calculations that simplify emissions determination; new procedures for field testing engines, and a more comprehensive set of definitions, references, and symbols.
- Defining calibration and accuracy specifications that are scaled to the applicable standard, which allows us to adopt a single specification that applies to a wide range of engine sizes and applications.

Some emission-control programs already rely on the test procedures in part 1065. These programs regulate land-based nonroad diesel engines, recreational vehicles, and nonroad spark-ignition engines over 19 kW.

We are adopting the lab-testing and field-testing specifications in part 1065 for all heavy-duty highway engines, as described in Section II.J. These procedures replace those currently published in subpart N in 40 CFR part 86. We are making a gradual transition from the part 86 procedures. For several years, manufacturers will be able to optionally use the part 1065 procedures. By the 2010 model year, part 1065 procedures will be required for any new testing. For all testing completed for 2009 and earlier model years, manufacturers may continue to rely on carryover test data based on part 86 procedures to certify engine families in later years. In addition, other subparts in part 86, as well as regulations for many different nonroad engines refer to the test procedures in part 86. We are including updated references for all these other programs to refer instead to the appropriate cite in part 1065.

Part 1065 is also advantageous for in-use testing because it specifies the same procedures for all common parts of field testing and laboratory testing. It also contains new provisions that help ensure that engines are tested in a laboratory in a way that is consistent with how they operate in use. These new provisions will ensure that engine dynamometer lab testing and field testing are conducted in a consistent way.

In the future, we may apply the test procedures specified in part 1065 to other types of engines, so we encourage companies involved in producing or testing other engines to stay informed of developments related to these test procedures. For example, we expect to propose in the near future new regulations for locomotives, marine engines, and several types of nonroad SI engines. We are likely to consider some changes to part 1065 in each of these rulemakings.

B. Revisions to Part 1065

Part 1065 was originally adopted on November 8, 2002 (67 FR 68242), and was initially applicable to standards regulating large nonroad spark-ignition engines and recreational vehicles under 40 CFR parts 1048 and 1051. The recent rulemaking adopting emission standards for nonroad diesel engines has also made part 1065 optional for Tier 2 and Tier 3 standards and required for Tier 4 standards. The test procedures initially adopted in part 1065 were sufficient to conduct testing, but in this final rule we have reorganized these procedures and added content to make various improvements. In particular, we have reorganized part 1065 by subparts as shown below:

Subpart A: general provisions; global information on applicability, alternate procedures, units of measure, etc.
Subpart B: equipment specifications; required hardware for testing
Subpart C: measurement instruments
Subpart D: calibration and verifications; for measurement systems
Subpart E: engine selection, preparation, and maintenance
Subpart F: test protocols; step-by-step sequences for laboratory testing and test validation
Subpart G: calculations and required information
Subpart H: fuels, fluids, and analytical gases
Subpart I: oxygenated fuels; special test procedures
Subpart J: field testing and portable emissions measurement systems
Subpart K: definitions, references, and symbols

The regulations now prescribe scaled specifications for test equipment and measurement instruments by parameters such as engine power, engine speed and the emission standards to which an engine must comply. That way this single set of specifications will cover the

[1] For an overview of our new regulatory organization, refer to our fact sheet entitled, ''Plain-Language Format of Emission Regulations for Nonroad Engines,'' EPA420–F–02–046, September 2002, *http://www.epa.gov/otaq/largesi.htm.*

full range of engine sizes and our full range of emission standards. Manufacturers will be able to use these specifications to determine what range of engines and emission standards may be tested using a given laboratory or field testing system.

The new content for part 1065 is mostly a combination of content from our most recent updates to other test procedures and from test procedures specified by the International Organization for Standardization (ISO). In some cases, however, there is new content that never existed in previous regulations. This new content addresses very recent issues such as measuring very low concentrations of emissions, using new measurement technology, using portable emissions measurement systems, and performing field testing. A full description of the changes is in the Technical Support Document that accompanies this final rule (this document is available in the docket for this rulemaking).

The new content also reflects a shift in our approach for specifying measurement performance. In the past we specified numerous calibration accuracies for individual measurement instruments, and we specified some verifications for individual components, such as NO_2 to NO converters. We have shifted our focus away from individual instruments and toward the overall performance of complete measurement systems. We did this for several reasons. First, some of what we specified in the past precluded the implementation of new measurement technologies. These new technologies, sometimes called ''smart analyzers'', combine signals from multiple instruments to compensate for interferences that were previously tolerable at higher emissions levels. These analyzers are useful for detecting low concentrations of emissions. They are also useful for detecting emissions from raw exhaust, which can contain high concentrations of interferences, such as water vapor. This is particularly important for field testing, which will most likely rely upon raw exhaust measurements. Second, this new ''systems approach'' challenges complete measurement systems with a series of periodic verifications, which we feel will provide a more robust assurance that a measurement system as a whole is operating properly. Third, the systems approach provides a direct pathway to demonstrate that a field test system performs similarly to a laboratory system. This is explained in more detail in item 10 below. Finally, we feel that our systems approach will lead to a more efficient way of assuring measurement performance in the laboratory and in the field. We believe that this efficiency will stem from less frequent individual instrument calibrations, and higher confidence that a complete measurement system is operating properly.

We have organized the new content relating to measurement systems performance into subparts C and D. We specify measurement instruments in subpart C and calibrations and periodic system verifications in subpart D. These two subparts apply to both laboratory and field testing. We have organized content specific to running a laboratory emissions test in subpart F, and we separated content specific to field testing in subpart J.

In subpart C we specify the types of acceptable instruments, but we only recommend individual instrument performance. We provide these recommendations as guidance for procuring new instruments. We feel that the periodic verifications that we require in subpart D will sufficiently evaluate the individual instruments as part of their respective overall measurement systems. In subpart F we specify performance validations that must be conducted as part of every laboratory test. In subpart J we specify similar performance validations for field testing that must be conducted as part of every field test. We feel that the periodic verifications in subpart D and the validations for every test that we prescribed in subparts F and J ensure that complete measurement systems are operating properly.

In subpart J we also specify an additional overall verification of portable emissions measurement systems (PEMS). This verification is a comprehensive comparison of a PEMS versus a laboratory system, and it may take several days of laboratory time to set up, run, and evaluate. However, we only require that this particular verification must be performed at least once for a given make, model, and configuration of a field test system.

Below is a brief description of the content of each subpart, highlighting some of the new content. We also highlight the more significant changes from the regulatory language that was proposed in our responses to public comments. See the TSD for a more complete listing of the changes and comments to our proposed part 1065.

1. Subpart A: General Provisions

In Subpart A we identify the applicability of part 1065 and describe how procedures other than those in part 1065 may be used to comply with a standard-setting part. In § 1065.10(c)(1), we specify that testing must be conducted in a way that represents in-use engine operation, such that in the rare case where provisions in part 1065 result in unrepresentative testing, other procedures would be used. We have revised the proposed regulatory language for this requirement to clarify the manufacturers' requirements and the process that we would use to make changes to the test procedures in these cases.

Other information in this subpart includes a description of the conventions we use regarding units and certain measurements and we discuss recordkeeping. We also provide an overview of how emissions and other information are used to determine final emission results. The regulations in § 1065.15 include a figure illustrating the different ways we allow brake-specific emissions to be calculated.

In this same subpart, we describe how continuous and batch sampling may be used to determine total emissions. We also describe the two ways of determining total work that we approve. Note that the figure indicates our default procedures and those procedures that require additional approval before we will allow them.

2. Subpart B: Equipment Specifications

Subpart B first describes engine and dynamometer related systems. Many of these specifications are scaled to an engine's size, speed, torque, exhaust flow rate, etc. We specify the use of in-use engine subsystems such as air intake systems wherever possible in order to best represent in-use operation when an engine is tested in a laboratory.

Subpart B also describes sampling dilution systems. These include specifications for the allowable components, materials, pressures, and temperatures. We describe how to sample crankcase emissions. We also now allow limited use of partial-flow dilution for PM sampling. Subpart B also specifies environmental conditions for PM filter stabilization and weighing. Although these provisions mostly come from our recent update to part 86, subpart N, we also describe some new aspects in detail.

The regulations in § 1065.101 include a diagram illustrating all the available equipment for measuring emissions.

3. Subpart C: Measurement Instruments

Subpart C specifies the requirements for the measurement instruments used for testing. In subpart C we recommend accuracy, repeatability, noise, and response time specifications for individual measurement instruments, but note that we require that overall

measurement systems meet the calibrations and verifications Subpart D.

In some cases we allow new instrument types to be used where we previously did not allow them. For example, we now allow the use of a nonmethane cutter for NMHC measurement, a nondispersive ultraviolet analyzers for NO_X measurement, zirconia sensors for O_2 measurement, various raw-exhaust flow meters for laboratory and field testing measurement, and an ultrasonic flow meter for CVS systems. We had proposed to also allow zirconia sensors for NO_X measurement, but we are not finalizing that option at this time because of manufacturer concerns about drift and sensor response to NO_2 and NH_3.

4. Subpart D: Calibrations and Verifications

Subpart D describes what we mean when we specify accuracy, repeatability and other parameters in subpart C. We are adopting calibrations and verifications that scale with engine size and with the emission standards to which an engine is certified. We are replacing some of what we have called ''calibrations'' in the past with a series of verifications, such as a linearity verification, which essentially verifies the calibration of an instrument without specifying how the instrument must be initially calibrated. Because new instruments have built-in routines that linearize signals and compensate for various interferences, our existing calibration specifications sometimes conflicted with an instrument manufacturer's instructions. In addition, there are new verifications in subpart D to ensure that the new instruments we specify in subpart C are used correctly. The most significant changes in this subpart from the proposal are that we split the language for continuous gas analyzer verification into two sections (§§ 1065.308 and 1065.309), we provide more detailed descriptions for the FID O_2 interference verifications (§ 1065.362) and NMHC cutter setups (§ 1065.365), and we added § 1065.395 for inertial PM balance verification.

5. Subpart E: Engine Selection, Preparation, and Maintenance

Subpart E describes how to select, prepare, and maintain a test engine. We updated these provisions to include both gasoline and diesel engines. This subpart is relatively short, and we did not make many changes to its proposed content.

6. Subpart F Test Protocols

Subpart F describes the step-by-step protocols for engine mapping, test cycle generation, test cycle validation, pre-test preconditioning, engine starting, emission sampling, and post-test validations. We proposed an improved way to map and generate cycles for constant-speed engines that would better represent in-use engine operation. We have modified this language slightly to reflect the different ways in which constant-speed test cycles can be specified. We are adopting a more streamlined set of test cycle and validation criteria. We allow modest corrections for drift of emission analyzer signals within a certain range. We are also adopting a recommended procedure for weighing PM samples. We are not finalizing our proposed procedure to correct for instrument noise because after receiving many comments, we now acknowledge that the procedure is not robust and applicable to all emissions.

7. Subpart G Calculations and Required Information

Subpart G includes all the calculations required in part 1065. We are adopting definitions of statistical quantities such as mean, standard deviation, slope, intercept, t-test, F-test, etc. By defining these quantities mathematically we intend to resolve any potential mis-communication when we discuss these quantities in other subparts. We have written all calculations for calibrations and emission calculations in international units to comply with 15 CFR part 1170, which removes the voluntary aspect of the conversion to international units for federal agencies. Furthermore, Executive Order 12770 (56 FR 35801, July 29, 1991) reinforces this policy by providing Presidential authority and direction for the use of the metric system of measurement by Federal agencies and departments. For our standards that are not completely in international units (*i.e.,* grams/horsepower-hour, grams/mile), we specify in part 1065 the correct use of internationally recognized conversion factors.

We also specify emission calculations based on molar quantities for flow rates, instead of volume or mass. This change eliminates the frequent confusion caused by using different reference points for standard pressure and standard temperature. Instead of declaring standard densities at standard pressure and standard temperature to convert volumetric concentration measurements to mass-based units, we declare molar masses for individual elements and compounds. Since these values are independent of all other parameters, they are known to be universally constant.

We have added some detail to the calculations relative to the proposed calculations to make them clearer. We also made changes in response to comments from manufacturers.

8. Subpart H Fuels, Fluids, and Analytical Gases

Subpart H specifies test fuels, lubricating oils and coolants, and analytical gases for testing. We are eliminating the Cetane Index specification for all diesel fuels, because the existing specification for Cetane Number sufficiently determines the cetane levels of diesel test fuels. We are not identifying any detailed specification for service accumulation fuel. Instead, we specify that service accumulation fuel may be a test fuel or a commercially available in-use fuel. This helps ensure that testing is representative of in-use engine operation. We are adding a list of ASTM specifications for in-use fuels as examples of appropriate service accumulation fuels. Compared to the proposed regulatory language, we have clarified that § 1065.10(c)(1) does not require test fuels to be more representative than the specified test fuels. We have added an allowance to use similar test fuels that do not meet all of the specifications, provided they do not compromise the manufacturer's ability to demonstrate compliance. We also now allow the use of ASTM test methods specified in 40 CFR part 80 in lieu of those specified in part 1065. We did this because we more frequently review and update the ASTM methods in 40 CFR part 80 versus those in part 1065.

We proposed purity specifications for analytical gases that scale with the standards that an engine must meet. In the final regulations, we have clarified the requirement to use good engineering judgment to maintain the stability of these gases, and have tightened the purity specification for FID fuel in response to comment.

9. Subpart I Oxygenated Fuels

Subpart I describes special procedures for measuring certain hydrocarbons whenever oxygenated fuels are used. We updated the calculations for these procedures in Subpart G. We have made some revisions to the proposed text to make it consistent the original content of the comparable provisions in 40 CFR part 86. We have also added an allowance to use the California NMOG

test procedures to measure alcohols and carbonyls.

10. Subpart J Field Testing and Portable Emissions Measurement Systems

We are adopting a wide range of changes to subpart J Field Testing. Portable Emissions Measurement Systems (PEMS) must generally meet the same specifications and verifications that laboratory instruments must meet, according to subparts B, C, and D. However, allow some deviations from laboratory specifications. In addition to meeting many of the laboratory system requirements, a PEMS must meet an overall verification relative to a laboratory measurements. This verification involves repeating a duty cycle several times. The duty cycle itself must have several individual field-test intervals (*e.g.,* NTE events) against which a PEMS is compared to the laboratory system. This is a comprehensive verification of a PEMS. We are also adopting a procedure for preparing and conducting a field test, and we are adopting drift corrections for emission analyzers. Given the evolving state of PEMS technology, the field-testing procedures provide for a number of known measurement techniques. We have added provisions and conditions for the use of PEMS in an engine dynamometer laboratory to conduct laboratory testing.

11. Subpart K Definitions, References, and Symbols

In subpart K we are adopting new and revised definitions of terms frequently used in part 1065. For example we have revised our definitions of ''brake power'', ''constant-speed engine'', and ''aftertreatment'' to provide more clarity, and we have added new definitions for things such as ''300 series stainless steel'', ''barometric pressure'', and ''operator demand''. There are new definitions such as ''duty cycle'' and ''test interval'' to distinguish the difference between a single interval over which brake-specific emissions are calculated and the complete cycle over which emissions are evaluated in a laboratory. We also present a thorough and consistent set of symbols, abbreviations, and acronyms.

II. Technical Amendments

A. Standard-Setting Changes That Apply to Multiple Categories

1. Definitions

We are revising several definitions that apply over more than one part of our regulations. These changes are designed to harmonize our regulations.

We are changing the definition of Marine engine and Marine vessel to harmonize our approach to amphibious vehicles and clarify other issues. We have treated amphibious vehicles differently whether they had a diesel engine or a spark-ignition engine. We are harmonizing our treatment of amphibious vehicles by consistently treating these as land-based products. We are also adding a provision defining amphibious vehicles are those that are designed primarily for operation on land to clarify that we don't consider hovercraft to be amphibious vehicles. This is consistent with our intent and our analyses in the rulemaking to initially set standards for these products. See the Technical Support Document for additional information related to these definitions. In particular, note that we describe our interpretation of what it means for an engine to be ''installed in a marine vessel.'' Manufacturers have raised several questions related to this issue, especially as it relates to portable engines installed on barges.

2. Penalties

The Clean Air Act specifies maximum penalty amounts corresponding to each prohibited Act. These maximum penalty amounts are periodically adjusted for inflation, based on the provisions of the Debt Collection Improvement Act. These maximum penalties have been updated under 40 CFR part 19. The new maximum penalties are $32,500 for introducing noncompliant engines into commerce and for manufacturers guilty of tampering, and $2,750 for non-manufacturers guilty of tampering. In addition, the maximum penalty we can recover using administrative procedures is $270,000. We are extending these revised penalties into each of our emission-control programs.

3. Deterioration Factors for $HC+NO_X$ Standards

Manufacturers requested that we allow them to calculate a single deterioration factor for engines that are subject to combined $HC+NO_X$ emission standards, rather than calculating separate deterioration factors for each pollutant. We proposed for some engines to clarify that separate deterioration factors were appropriate. In the case of spark-ignition engines, it is especially true that changing carburetor calibrations and other things affecting air-fuel ratios have a direct inverse relationship on HC and NO_X emissions. Where deterioration factors are based on service accumulation through the entire useful life, we believe it is therefore appropriate to base deterioration factors for spark-ignition engines subject to $HC+NO_X$ emission standards on a single deterioration factor for the combined pollutants. However, if deteriortion factors are based on service accumulation over less than the full useful life, we want to avoid the situation where a manufacturer is extrapolating values that presume further improvement in the emission levels of any particular pollutant. For such testing, we therefore specify that separate deterioration factors for each pollutant are appropriate. We are making a related, additional change to clarify that manufacturers must include both low-hour and deteriorated emission measurements for each pollutant, even if the regulations allow for a single deterioration factor for $HC+NO_X$ emissions together. Compression-ignition engines have different wear mechanisms and generally have much longer useful-life values, so it is not clear that this approach to allowing combined deterioration factor is appropriate for these engines. We may further consider applying this change to compression-ignition engines in a future rulemaking.

4. Emission Warranty Related to Extended Service Contracts

Manufacturers objected to our proposal to apply emission-related warranty requirements to components for which a consumer pays for an extended performance warranty. We agree with the point raised by the manufacturers that these service contracts do not necessarily imply that the part should last longer, but rather that the manufacturer (or a third-party provider) has made a calculation regarding the financial and customer service benefits of offering contracts that provide free or reduced-cost coverage for certain components after collecting an up-front charge. We will remove this provision across all engine categories.

5. Exemption for Staged Assembly

Some manufacturers pointed out that they were facing difficulties with production processes that required them to ship nearly completed engines to one or more different facilities for final assembly. Without an exemption, this would violate the applicable prohibited acts, since it involves the introduction into commerce an engine that is not in its certified configuration. To address this concern, we have adopted an exemption that allows manufacturers to assemble engines at multiple facilities, as long as they maintain control of the engines at all times before final assembly. Manufacturers would need to

request approval for such an arrangement. EPA approval may be conditioned on the manufacturer taking reasonable additional steps to ensure that engines end up in their certified configuration. This exemption applies to all the engine categories that are subject to 40 CFR part 1068 (as described in the next section), and to locomotives and marine diesel engines.

B. Nonroad General Compliance Provisions (40 CFR Part 1068)

In addition to the changing test procedures described above, we are making various changes to the general compliance provisions in 40 CFR part 1068, which currently applies to land-based nonroad diesel engines, recreational vehicles, and nonroad spark-ignition engines over 19 kW. We encourage manufacturers of other engines to take note of these changes, since we intend eventually to apply the provisions of part 1068 to all engines subject to EPA emission standards.

There was extensive comment related to the existing provisions in § 1068.260 related to the exemption that allows engine manufacturers to arrange for shipment of aftertreatment devices separately from engines that are intended to rely on aftertreatment. Commenters suggested that we relax some of the provisions that were intended to prevent noncompliance. We continue to believe the provisions adopted in § 1068.260 are appropriate for nonroad engines. The more extensive oversight and control mechanisms are important to ensuring that engines are assembled correctly, since there are so many possible equipment manufacturers and so many different business relationships among companies. Given that we are requiring engine manufacturers to include the cost of aftertreatment components in the price of the engine, we believe it is implicitly clear that the engine manufacturer is responsible for shipping costs, so we have removed the proposal to restate that in the regulations. We are making three other adjustments to the proposal. First, we are removing the requirement for engine manufacturers to arrange for direct shipment of aftertreatment components from the supplier to the equipment manufacturer, since a third party may appropriately be involved to produce system assemblies for integration into equipment. Second, we are adding a paragraph to clarify that integrated manufacturers can meet their auditing requirements by maintaining a database for matching up engines with the appropriate aftertreatment components. Third, we are adopting the staged-assembly exemption, as described above, which would streamline the production process for integrated engine and equipment manufacturers and address a wide range of production scenarios in addition to separate shipment of aftertreatment components.

The changes to part 1068 include several other minor adjustments and corrections. These changes are described in the Technical Support Document.

C. Land-Based Nonroad Diesel Engines (40 CFR Parts 89 and 1039)

We recently adopted a new tier of emission standards for nonroad diesel engines, codifying these standards in 40 CFR part 1039. This rulemaking led us to make several regulatory changes to the existing tiers of standards for these engines in 40 CFR part 89. In cases where we discovered the need for changes after publishing the proposed rule, but we did not make those changes to part 89 in the final rule out of concern that the public had not had an opportunity for comment. Similarly, we are adopting some adjustments to part 1039, based on information that surfaced late in that rulemaking. See the Technical Support Document for a complete discussion of the rulemaking changes for these engines.

We proposed to add a constraint for averaging, banking, and trading to prevent manufacturers from including credits earned in California or another state if there would ever be a situation in which manufacturers would be making engines with lower emissions to meet more stringent state standards or to earn emission credits under the state program. In the case of nonroad diesel engines, California has adopted our Tier 4 standards without an emission-credit program that does not involve California-specific credit calculations. The proposed provision would therefore have no effect for the foreseeable future. We have decided not to adopt the proposed provision, but expect to pursue this if California adopts more stringent standards or creates a California-specific emission-credit program for these engines (see 40 CFR 1051.701(d)(4)).

D. Marine Diesel Engines (40 CFR Part 94)

We are making several changes to our marine diesel engine program, in 40 CFR part 94. These changes are intended to clarify several aspects of the program. These changes are described in detail in the Technical Support Document. This discussion also elaborates on our interpretation of various provisions. For example, we describe how to determine which standards apply to amphibious vehicles and hovercraft. We also explain how we interpret the term ''marine diesel engine'' with respect to auxiliary applications in which it may not be clear whether the engine is ''installed'' on the vessel or not.

E. Small Nonroad Spark-Ignition Engines (40 CFR Part 90)

We are adding a new § 90.913 to better define the responsibilities for manufacturers choosing to certify their engines below 19 kW to the emission standards for Large SI engines in 40 CFR part 1048. We are also revising § 90.1 to cross-reference provisions in parts 86, 1048, and 1051 that allow highway motorcycle engines and nonroad engines above 19 kW to meet the requirements in part 90 under certain conditions.

We are making several amendments to the test procedures, such as improving calculations for humidity corrections, adding clarifying language, and adjusting reporting provisions. We are also updating current references to test procedures in 40 CFR part 86 by pointing instead to 40 CFR part 1065. In addition, we are making a variety of minor corrections and clarifications. See the Technical Support Document for a discussion of all these changes.

F. Marine Spark-Ignition Engines (40 CFR Part 91)

We are adopting only minimal changes for Marine SI engines in 40 CFR part 91. These changes are primarily to update current references to test procedures in 40 CFR part 86 by pointing instead to 40 CFR part 1065. We are also updating various definitions, as described in Section II.A. Manufacturers raised some issues in the comment period that resulted in further minor corrections and adjustments for the final rule. We also corrected equations for typographical errors.

G. Large Nonroad Spark-Ignition Engines (40 CFR Part 1048)

We adopted emission standards for nonroad spark-ignition engines over 19 kW in November 2002 (67 FR 68242). The regulations in 40 CFR part 1048 were our first attempt to draft emission-control regulations in plain-language format. In the recent final rule for nonroad diesel engines, we went through a similar process, including extensive interaction with a different set of manufacturers. This process led us to adopt regulatory provisions in 40 CFR part 1039 that differ somewhat from those in part 1048. Since the process of meeting standards, applying for

certificates, and complying with other emission-related requirements has a lot of commonality across programs, we have a strong interest in adopting consistent provisions and uniform terminology where possible. As a result, we are making extensive changes in part 1048 to align with the regulations in part 1039.

For discussion of these changes, see the Technical Support Document.

H. Recreational Vehicles (40 CFR Part 1051)

We adopted emission standards for recreational vehicles in November 2002 (67 FR 68242). The regulations in 40 CFR part 1051 were our first attempt to draft emission-control regulations in plain-language format. In the recent final rule for nonroad diesel engines, we went through a similar process, including extensive interaction with a different set of manufacturers. This process led us to adopt regulatory provisions in 40 CFR part 1039 that differ from those in part 1051. Since the process of meeting standards, applying for certificates, and complying with other emission-related requirements has a lot of commonality across programs, we have a strong interest in adopting consistent provisions and uniform terminology as much as possible. As a result, we are making extensive changes in part 1051 to align with the regulations in part 1039. These provisions are all discussed in more detail in the Technical Support Document.

We proposed to add a constraint for averaging, banking, and trading to prevent manufacturers from including credits earned in California or another state if there would ever be a situation in which manufacturers would be making engines with lower emissions to meet more stringent state standards or to earn emission credits under the state program. We are adopting this provision in the final rule to require exclusion of California sales from federal ABT calculations if a company is subject to more stringent state standards, or if a company generates or uses emissions credits to show that it meets California standards. This provision is necessary to prevent double-counting of emission credits. In the case of recreational vehicles, California adopted emission standards that predate the EPA rulemaking. The California emission standards are based on a similar technology assessment, but are in a different form. For example, California specifies different numerical standards that apply to hydrocarbon emissions only, while EPA's standards apply to $HC+NO_x$ emissions. Given the difficulty in comparing these two sets of standards, we are making the judgment that, for the purposes of ABT calculations, California's current exhaust emission standards are equivalent to the EPA standards. Under the current requirements, companies would therefore exclude their California products from federal ABT calculations only if those products generate or use emission credits under the California program. If California adopts new standards for recreational vehicles, we will again make a judgment regarding the relative stringency of the two programs for ABT purposes.

I. Locomotives (40 CFR Part 92)

We proposed a variety of changes for our locomotive regulations in 40 CFR part 92 to correct various technical references and typographical errors. We are finalizing those changes. We are also finalizing other changes in response to comments. The large majority of the comments received regarding locomotives came from the Engine Manufacturers Association (EMA). See the Technical Support Document for additional information. In addition to the changes being finalized, we are also publishing the following clarifications in response to public comments.

EMA asked that remanufacturers be allowed to limit the practice of not replacing every power assembly with remanufactured power assemblies at the time of engine remanufacture. Remanufacturers already can limit this practice just as original manufacturers limit the parts that are used in their locomotives. In fact, remanufacturers would be expected to limit this practice to only those cases in which they can be certain that the previously used power assembly will not cause an engine to exceed an emission standard. By allowing an engine to be remanufactured under its certificate, the remanufacturer is assuming responsibility for the emission performance of that remanufactured engine. We define remanufactured locomotives to be ''new'', and the certificate holder has the same responsibilities as the manufacturer of a freshly manufactured locomotive. The remanufacturer is thus expected to maintain some degree of control over the remanufacturing process to ensure that the remanufactured locomotive. For example, the remanufacturer might limit the certificate to only those engines remanufactured by installers that has been properly trained. It must be noted, however, that while certificate holders have responsibility for the emission performance of locomotives remanufactured under their certificates, 40 CFR 92.209 also assigns responsibility to others involved in the remanufacturing process.

EMA asked that EPA not use the term ''offer for sale'' in the prohibited acts (40 CFR 92.1103). They are concerned that this would be problematic because locomotives are generally manufactured only after a sales agreement has been completed. The manufacturer offers to manufacture and sell a locomotive at least several months before it actually has obtained a certificate of conformity for the locomotive. Given this confusion, we are clarifying that EPA does not interpret the phrase ''offer to sell'' to apply to products that have not yet been manufactured (or remanufactured, as applicable).

EMA asked that EPA exempt replacement engines as we do in other nonroad engine programs. However, such exemption is not necessary with locomotives. Long after the manufacturer has stopped manufacturing brand new engines, that manufacturer (along with other remanufacturers) will be certifying remanufacturing systems. Thus, we believe that the cases in which a brand new engine will be needed will be rare. Nevertheless, we are finalizing a regulatory change in 40 CFR 92.204 to explicitly allow manufacturers to include freshly manufactured locomotive engines in the same engine family as remanufactured locomotives. We believe that this will resolve the issue, since manufacturers would merely need to certify a remanufacturing system for each engine it manufactures.

Finally, we are adopting a provision that will allow manufacturers to certify locomotives that have total power less than 750 kW. This provision will allow manufacturers of hybrid locomotives to certify under 40 CFR part 92. EMA commented that if we do this, we should specify test procedures and duty-cycle weightings for such hybrids. We agree that this would be appropriate in the long term, but do not believe that this rulemaking would be the proper place for such provisions. Instead, we expect to rely on the testing and calculation flexibility of 40 CFR 92.207 and 92.132(e) to certify hybrids on a case-by-case basis.

J. Highway Engines and Vehicles (40 CFR Parts 85 and 86)

Most of the changes we are adopting in parts 85 and 86 apply uniquely to different types of vehicles or engines. We are, however, adopting changes to the program for Independent Commercial Importers that affect all the different applications. The Technical

Support Document describes how we are limiting the importation of products where the applicable standards are based on the year of original production. We continue to allow unlimited importation of products where the applicable standards are based on the year of modification.

The following paragraphs provide an overview of the changes for each type of engine or vehicle. See the Technical Support Document for a more detailed discussion of these changes.

1. Light-Duty Vehicles

For light-duty vehicles, we are adopting a variety of clarifications and corrections, especially related to test procedures.

2. Highway Motorcycles

For highway motorcycles, we are correcting fuel specifications, clarifying the requirements related to engine labels, fixing the provisions related to using nonroad certificates for highway motorcycles below 50 cc (consistent with similar changes in other programs), and making a variety of other minor corrections.

3. Heavy-Duty Highway Engines

As discussed above, we are adopting the lab-testing and field-testing specifications in part 1065 for heavy-duty highway engines, including both diesel and Otto-cycle engines. These procedures replace those currently published in 40 CFR part 86, subpart N.

We proposed to complete the migration of heavy-duty highway test procedures to part 1065 by the 2008 model year. Manufacturers pointed out that it would be most appropriate to move this date back to 2010 to correspond with the implementation of the new emission standards in that year. We agree that it would be appropriate to make this transition over several model years to fully migrate to part 1065, no later than model year 2010. Manufacturers do not need to conduct new testing if they are able to use carryover data, but any new testing for 2010 and later model years must be done using the part 1065 procedures. Migrating heavy-duty highway engines to the part 1065 procedures allows us to include all the testing-related improvements in the HD2007 rule, including those we have adopted through guidance.[2] In addition, part 1065 incorporates revisions based on updated procedures for sampling low concentrations of PM.

[2] ''Guidance Regarding Test Procedures for Heavy-Duty On-Highway and Non-Road Engines,'' December 3, 2002.

Another question was raised about how EPA should conduct testing during this transition stage. We intend to incorporate near-term upgrades that would make our testing facilities capable of meeting the requirements in part 1065. Most of the testing methods in part 1065 result in better measurements and should therefore not pose problems, even if manufacturers based their certification on the test procedures specified in part 86. Three exceptions to this include the steps for mapping an engine, denormalizing test cycles, and evaluating cycle-validation criteria. Changing the specified procedure for these three items would involve different engine operation that could cause an engine to have higher or lower emission levels.For all other parameters, the new procedures would be equivalent, or would give more accurate or more precise results. We are therefore specifying that we will follow the manufacturer's procedures for these three items related to engine operation, but will otherwise consider our tests valid if we use procedures from either part 86 or part 1065, regardless of the procedures used by the manufacturer.

EMA responded to our request for comment related to a provision that would allow engine manufacturers to ship certified engines without applicable aftertreatment components, while providing for separate shipment of those components to equipment manufacturers. EMA commented that such a provision would be appropriate, and that it should be set up to require either that the component cost be included in the price of the engine, or auditing requirements for engine manufacturers, but not both, since the equipment manufacturer has enough incentive to make the final installation without additional oversight. We agree with manufacturers that these more flexible arrangements are appropriate for the prevailing business relationships for heavy-duty highway engines. There are far fewer manufacturers producing heavy-duty trucks and buses than nonroad equipment. Engine manufacturers are therefore expected to be able to maintain control with an approach that requires them either to include the price of the aftertreatment in the engine price or to conduct periodic audits of vehicle manufacturers, but not both. In the periodic audit we require manufacturers to confirm the number of aftertreatment component shipped is sufficient for the applicable vehicle production. This confirmation is intended to show that the vehicle manufacturers have purchasing and manufacturing processes in place to ensure that they are ordering and receiving enough aftertreatment components and that each vehicles is equipped with the correct components. To reduce the risk of noncompliance where the engine and aftertreatment components are not priced together, we require that engine manufacturers have a written confirmation that the vehicle manufacturer has ordered the appropriate aftertreatment before shipping engines without the otherwise required aftertreatment components.

We are adopting a test-related provision that was described in the proposal. We requested comment on approaches to address the concern that some engines experience significant overspeed excursions when following the proposed approach to defining maximum test speed and denormalizing duty cycles. As described in the Technical Support Document, we are finalizing a provision to define maximum test speed at the highest speed point at which engines are expected to operate in use.

III. Public Participation

In the proposed rule, we invited public participation in a public hearing, a public workshop, and a comment period for written comments. No one responded to indicate in interest in the public hearing, but we held the public workshop to talk through a wide range of issues. We also received written comments from about 20 organizations, mostly representing manufacturers. Several principle issues raised by commenters are described in the individual sections above. The Final Technical Support Document addresses the full range of comments.

IV. Statutory and Executive Order Reviews

A. Executive Order 12866: Regulatory Planning and Review

Under Executive Order 12866 the Agency must determine whether the regulatory action is ''significant'' and therefore subject to review by the Office of Management and Budget (OMB) and the requirements of this Executive Order. The Executive Order defines a ''significant regulatory action'' as any regulatory action that is likely to result in a rule that may:

- Have an annual effect on the economy of $100 million or more or adversely affect in a material way the economy, a sector of the economy, productivity, competition, jobs, the environment, public health or safety, or State, Local, or Tribal governments or communities;

• Create a serious inconsistency or otherwise interfere with an action taken or planned by another agency;

• Materially alter the budgetary impact of entitlements, grants, user fees, or loan programs, or the rights and obligations of recipients thereof; or

• Raise novel legal or policy issues arising out of legal mandates, the President's priorities, or the principles set forth in the Executive Order.

The Office of Management and Budget reviewed this rule under the provisions of Executive Order 12866. Any new costs associated with this rule will be minimal. In addition, some of the changes will substantially reduce the burden associated with testing, as described in the Regulatory Support Document.

B. Paperwork Reduction Act

This rule does not include any new collection requirements, as it merely revises the measurement methods and makes a variety of technical amendments to existing programs.

C. Regulatory Flexibility Act

EPA has determined that it is not necessary to prepare a regulatory flexibility analysis in connection with this final rule.

For purposes of assessing the impacts of this final rule on small entities, a small entity is defined as: (1) A small business as defined in the underlying rulemakings for each individual category of engines; (2) a small governmental jurisdiction that is a government of a city, county, town, school district or special district with a population of less than 50,000; and (3) a small organization that is any not-for-profit enterprise which is independently owned and operated and is not dominant in its field.

After considering the economic impacts of this final rule on small entities, EPA has concluded that this action will not have a significant economic impact on a substantial number of small entities. The small entities directly regulated by this rule are small businesses that produce nonroad engines. We have determined that no small entities will be negatively affected as a result of this rule. This rule merely revises the measurement methods and makes a variety of technical amendments to existing programs. This rule, therefore, does not require a regulatory flexibility analysis.

Although this rule will not have a significant economic impact on a substantial number of small entities, EPA nonetheless has tried to reduce the impact of this rule on small entities. For example, most of the changes clarify existing requirements, which will reduce the time needed to comply, and added flexibility, which may allow for a simpler effort to comply.

D. Unfunded Mandates Reform Act

Title II of the Unfunded Mandates Reform Act of 1995 (UMRA), Public Law. 104–4, establishes requirements for federal agencies to assess the effects of their regulatory actions on state, local, and tribal governments and the private sector. Under section 202 of the UMRA, EPA generally must prepare a written statement, including a cost-benefit analysis, for proposed and final rules with ''federal mandates'' that may result in expenditures to state, local, and tribal governments, in the aggregate, or to the private sector, of $100 million or more in any one year. Before promulgating an EPA rule for which a written statement is needed, section 205 of the UMRA generally requires EPA to identify and consider a reasonable number of regulatory alternatives and adopt the least costly, most cost-effective, or least burdensome alternative that achieves the objectives of the rule. The provisions of section 205 do not apply when they are inconsistent with applicable law. Moreover, section 205 allows EPA to adopt an alternative other than the least costly, most cost-effective, or least burdensome alternative if the Administrator publishes with the final rule an explanation of why that alternative was not adopted.

Before EPA establishes any regulatory requirements that may significantly or uniquely affect small governments, including tribal governments, it must have developed under section 203 of the UMRA a small government agency plan. The plan must provide for notifying potentially affected small governments, enabling officials of affected small governments to have meaningful and timely input in the development of EPA regulatory proposals with significant federal intergovernmental mandates, and informing, educating, and advising small governments on compliance with the regulatory requirements.

This rule contains no federal mandates for state, local, or tribal governments as defined by the provisions of Title II of the UMRA. The rule imposes no enforceable duties on any of these governmental entities. Nothing in the rule significantly or uniquely affects small governments. We have determined that this rule contains no federal mandates that may result in expenditures of more than $100 million to the private sector in any single year. This rule merely revises the measurement methods and makes a variety of technical amendments to existing programs. The requirements of UMRA therefore do not apply to this action.

E. Executive Order 13132: Federalism

Executive Order 13132, entitled ''Federalism'' (64 FR 43255, August 10, 1999), requires EPA to develop an accountable process to ensure ''meaningful and timely input by State and local officials in the development of regulatory policies that have federalism implications.'' ''Policies that have federalism implications'' is defined in the Executive Order to include regulations that have ''substantial direct effects on the states, on the relationship between the national government and the States, or on the distribution of power and responsibilities among the various levels of government.''

Under Section 6 of Executive Order 13132, EPA may not issue a regulation that has federalism implications, that imposes substantial direct compliance costs, and that is not required by statute, unless the Federal government provides the funds necessary to pay the direct compliance costs incurred by State and local governments, or EPA consults with State and local officials early in the process of developing the proposed regulation. EPA also may not issue a regulation that has federalism implications and that preempts State law, unless the Agency consults with State and local officials early in the process of developing the proposed regulation.

Section 4 of the Executive Order contains additional requirements for rules that preempt State or local law, even if those rules do not have federalism implications (*i.e.*, the rules will not have substantial direct effects on the States, on the relationship between the national government and the states, or on the distribution of power and responsibilities among the various levels of government). Those requirements include providing all affected State and local officials notice and an opportunity for appropriate participation in the development of the regulation. If the preemption is not based on express or implied statutory authority, EPA also must consult, to the extent practicable, with appropriate State and local officials regarding the conflict between State law and Federally protected interests within the agency's area of regulatory responsibility.

This rule does not have federalism implications. It will not have substantial direct effects on the States, on the relationship between the national government and the States, or on the

distribution of power and responsibilities among the various levels of government, as specified in Executive Order 13132.

F. Executive Order 13175: Consultation and Coordination With Indian Tribal Governments

Executive Order 13175, entitled ''Consultation and Coordination with Indian Tribal Governments'' (65 FR 67249, November 6, 2000), requires EPA to develop an accountable process to ensure ''meaningful and timely input by tribal officials in the development of regulatory policies that have tribal implications.''

This rule does not have tribal implications as specified in Executive Order 13175. This rule will be implemented at the Federal level and impose compliance costs only on engine manufacturers and ship builders. Tribal governments will be affected only to the extent they purchase and use equipment with regulated engines. Thus, Executive Order 13175 does not apply to this rule.

G. Executive Order 13045: Protection of Children From Environmental Health and Safety Risks

Executive Order 13045, ''Protection of Children from Environmental Health Risks and Safety Risks'' (62 FR 19885, April 23, 1997) applies to any rule that (1) is determined to be ''economically significant'' as defined under Executive Order 12866, and (2) concerns an environmental health or safety risk that EPA has reason to believe may have a disproportionate effect on children. If the regulatory action meets both criteria, Section 5–501 of the Order directs the Agency to evaluate the environmental health or safety effects of the planned rule on children, and explain why the planned regulation is preferable to other potentially effective and reasonably feasible alternatives considered by the Agency.

This rule is not subject to the Executive Order because it does not involve decisions on environmental health or safety risks that may disproportionately affect children.

H. Executive Order 13211: Actions That Significantly Affect Energy Supply, Distribution, or Use

This rule is not a ''significant energy action'' as defined in Executive Order 13211, ''Actions Concerning Regulations That Significantly Affect Energy Supply, Distribution, or Use'' (66 FR 28355 (May 22, 2001)), because it is not likely to have a significant effect on the supply, distribution, or use of energy.

I. National Technology Transfer Advancement Act

Section 12(d) of the National Technology Transfer and Advancement Act of 1995 (''NTTAA''), Public Law 104–113, section 12(d) (15 U.S.C. 272 note) directs EPA to use voluntary consensus standards in its regulatory activities unless doing so would be inconsistent with applicable law or otherwise impractical. Voluntary consensus standards are technical standards (*e.g.*, materials specifications, test methods, sampling procedures, and business practices) that are developed or adopted by voluntary consensus standards bodies. NTTAA directs EPA to provide Congress, through OMB, explanations when the Agency decides not to use available and applicable voluntary consensus standards.

This rule involves technical standards. The International Organization for Standardization (ISO) has a voluntary consensus standard that can be used to test engines. However, the test procedures in this final rule reflect a level of development that goes substantially beyond the ISO or other published procedures. The procedures incorporate new specifications for transient emission measurements, measuring PM emissions at very low levels, measuring emissions using field-testing procedures. The procedures we adopt in this rule will form the working template for ISO and national and state governments to define test procedures for measuring engine emissions. As such, we have worked extensively with the representatives of other governments, testing organizations, and the affected industries.

J. Congressional Review Act

The Congressional Review Act, 5 U.S.C. 801 *et seq.*, as added by the Small Business Regulatory Enforcement Fairness Act of 1996, generally provides that before a rule may take effect, the agency promulgating the rule must submit a rule report, which includes a copy of the rule, to each House of the Congress and to the Comptroller General of the United States. EPA will submit a report containing this rule and other required information to the U.S. Senate, the U.S. House of Representatives, and the Comptroller General of the United States prior to publication of the rule in the **Federal Register**. This rule is not a ''major rule'' as defined by 5 U.S.C. 804(2).

V. Statutory Provisions and Legal Authority

Statutory authority for the engine controls adopted in this rule is in 42 U.S.C. 7401—7671q.

List of Subjects

40 CFR Part 85

Confidential business information, Imports, Labeling, Motor vehicle pollution, Reporting and recordkeeping requirements, Research, Warranties.

40 CFR Part 86

Administrative practice and procedure, Confidential business information, Labeling, Motor vehicle pollution, Reporting and recordkeeping requirements.

40 CFR Part 89

Environmental protection, Administrative practice and procedure, Confidential business information, Imports, Labeling, Motor vehicle pollution, Reporting and recordkeeping requirements, Research, Vessels, Warranties.

40 CFR Part 90

Environmental protection, Administrative practice and procedure, Air pollution control, Confidential business information, Imports, Labeling, Reporting and recordkeeping requirements, Research, Warranties.

40 CFR Part 91

Environmental protection, Administrative practice and procedure, Air pollution control, Confidential business information, Imports, Labeling, Penalties, Reporting and recordkeeping requirements, Warranties

40 CFR Part 92

Administrative practice and procedure, Air pollution control, Confidential business information, Imports, Labeling, Railroads, Reporting and recordkeeping requirements, Warranties

40 CFR Part 94

Environmental protection, Administrative practice and procedure, Air pollution control, Confidential business information, Imports, Penalties, Reporting and recordkeeping requirements, Vessels, Warranties.

40 CFR Parts 1039, 1048, and 1051

Environmental protection, Administrative practice and procedure, Air pollution control, Confidential business information, Imports, Labeling, Penalties, Reporting and recordkeeping requirements, Warranties.

40 CFR Part 1065

Environmental protection, Administrative practice and procedure, Incorporation by reference, Reporting and recordkeeping requirements, Research.

40 CFR Part 1068

Environmental protection, Administrative practice and procedure, Confidential business information, Imports, Motor vehicle pollution, Penalties, Reporting and recordkeeping requirements, Warranties.

Dated: June 3, 2005.

Stephen L. Johnson,

Administrator.

■ For the reasons set out in the preamble, title 40, chapter I of the Code of Federal Regulations is amended as follows:

PART 85—CONTROL OF AIR POLLUTION FROM MOBILE SOURCES

■ 1. The authority citation for part 85 continues to read as follows:

Authority: 42 U.S.C. 7401–7671q.

■ 2. Section 85.1502 is amended by revising paragraph (a)(14) to read as follows:

§ 85.1502 Definitions.

(a) * * *

(14) *United States.* United States includes the States, the District of Columbia, the Commonwealth of Puerto Rico, the Commonwealth of the Northern Mariana Islands, Guam, American Samoa, and the U.S. Virgin Islands.

* * * * *

■ 3. Section 85.1503 is amended by revising the section heading and adding paragraphs (c), (d), and (e) to read as follows:

§ 85.1503 General requirements for importation of nonconforming vehicles and engines.

* * * * *

(c) In any one certificate year (*e.g.*, the current model year), an ICI may finally admit no more than the following numbers of nonconforming vehicles or engines into the United States under the provisions of § 85.1505 and § 85.1509, except as allowed by paragraph (e) of this section:

(1) 5 heavy-duty engines.

(2) A total of 50 light-duty vehicles, light-duty trucks, and medium-duty passenger vehicles.

(3) 50 highway motorcycles.

(d) For ICIs owned by a parent company, the importation limits in paragraph (c) of this section include importation by the parent company and all its subsidiaries.

(e) An ICI may exceed the limits outlined paragraphs (c) and (d) of this section, provided that any vehicles/engines in excess of the limits meet the emission standards and other requirements outlined in the provisions of § 85.1515 for the model year in which the motor vehicle/engine is modified (instead of the emission standards and other requirements applicable for the OP year of the vehicle/engine).

■ 4. Section 85.1513 is amended by revising paragraph (d) to read as follows:

§ 85.1513 Prohibited acts; penalties.

* * * * *

(d) Any importer who violates section 203(a)(1) of the Act is subject to a civil penalty under section 205 of the Act of not more than $32,500 for each vehicle or engine subject to the violation. In addition to the penalty provided in the Act, where applicable, under the exemption provisions of § 85.1511(b), or under § 85.1512, any person or entity who fails to deliver such vehicle or engine to the U.S. Customs Service is liable for liquidated damages in the amount of the bond required by applicable Customs laws and regulations.

* * * * *

■ 5. Section 85.1515 is amended by revising paragraphs (c)(1) and (c)(2) to read as follows:

§ 85.1515 Emission standards and test procedures applicable to imported nonconforming motor vehicles and motor vehicle engines.

* * * * *

(c)(1) Nonconforming motor vehicles or motor vehicle engines of 1994 OP model year and later conditionally imported pursuant to § 85.1505 or § 85.1509 shall meet all of the emission standards specified in 40 CFR part 86 for the OP year of the vehicle or motor vehicle engine. At the option of the ICI, the nonconforming motor vehicle may comply with the emissions standards in 40 CFR 86.1708–99 or 86.1709–99, as applicable to a light-duty vehicle or light light-duty truck, in lieu of the otherwise applicable emissions standards specified in 40 CFR part 86 for the OP year of the vehicle. The provisions of 40 CFR 86.1710–99 do not apply to imported nonconforming motor vehicles. The useful life specified in 40 CFR part 86 for the OP year of the motor vehicle or motor vehicle engine is applicable where useful life is not designated in this subpart.

(2)(i) Nonconforming light-duty vehicles and light light-duty trucks(LDV/LLDTs) originally manufactured in OP years 2004, 2005 or 2006 must meet the FTP exhaust emission standards of bin 9 in Tables S04–1 and S04–2 in 40 CFR 86.1811–04 and the evaporative emission standards for light-duty vehicles and light light-duty trucks specified in 40 CFR 86.1811–01(e)(5).

(ii) Nonconforming LDT3s and LDT4s (HLDTs) and medium-duty passenger vehicles (MDPVs) originally manufactured in OP years 2004 through 2006 must meet the FTP exhaust emission standards of bin 10 in Tables S04–1 and S04–2 in 40 CFR 86.1811–04 and the applicable evaporative emission standards specified in 40 CFR 86.1811–04(e)(5). For 2004 OP year HLDTs and MDPVs where modifications commence on the first vehicle of a test group before December 21, 2003, this requirement does not apply to the 2004 OP year. ICIs opting to bring all of their 2004 OP year HLDTs and MDPVs into compliance with the exhaust emission standards of bin 10 in Tables S04–1 and S04–2 in 40 CFR 86.1811–04 , may use the optional higher NMOG values for their 2004–2006 OP year LDT2s and 2004–2008 LDT4s.

(iii) Nonconforming LDT3s and LDT4s (HLDTs) and medium-duty passenger vehicles (MDPVs) originally manufactured in OP years 2007 and 2008 must meet the FTP exhaust emission standards of bin 8 in Tables S04–1 and S04–2 in 40 CFR 86.1811–04 and the applicable evaporative standards specified in 40 CFR 86.1811–04(e)(5).

(iv) Nonconforming LDV/LDTs originally manufactured in OP years 2007 and later and nonconforming HLDTs and MDPVs originally manufactured in OP years 2009 and later must meet the FTP exhaust emission standards of bin 5 in Tables S04–1 and S04–2 in 40 CFR 86.1811–04, and the evaporative standards specified in 40 CFR 86.1811(e)(1) through (e)(4).

(v) ICIs are exempt from the Tier 2 and the interim non-Tier2 phase-in intermediate percentage requirements for exhaust, evaporative, and refueling emissions described in 40 CFR 86.1811–04.

(vi) In cases where multiple standards exist in a given model year in 40 CFR part 86 due to phase-in requirements of new standards, the applicable standards for motor vehicle engines required to be certified to engine-based standards are the least stringent standards applicable to the engine type for the OP year.

* * * * *

■ 6. Section 85.1713 is added to subpart R to read as follows:

§ 85.1713 Delegated-assembly exemption.

The provisions of this section apply for manufacturers of heavy-duty

highway engines. (a) Shipping an engine separately from an aftertreatment component that you have specified as part of its certified configuration will not be a violation of the prohibitions in Clean Air Act section 203 (42 U.S.C. 7522), if you follow the provisions of paragraph (b) or (c) of this section.

(b) If you include the cost of all aftertreatment components in the cost of the engine and ship the aftertreatment components directly to the vehicle manufacturer, or arrange for separate shipment by the component manufacturer to the vehicle manufacturer, you must meet all the following conditions:

(1) Apply for and receive a certificate of conformity for the engine and its emission-control system before shipment.

(2) Provide installation instructions in enough detail to ensure that the engine will be in its certified configuration if someone follows these instructions.

(3) Have a contractual agreement with a vehicle manufacturer obligating the vehicle manufacturer to complete the final assembly of the engine so it is in its certified configuration when installed in the vehicle. This agreement must also obligate the vehicle manufacturer to provide the affidavits required under paragraph (b)(4) of this section.

(4) Take appropriate additional steps to ensure that all engines will be in their certified configuration when installed by the vehicle manufacturer. At a minimum, you must obtain annual affidavits from every vehicle manufacturer to whom you sell engines under this section. Include engines that you sell through distributors or dealers. The affidavits must list the part numbers of the aftertreatment devices that vehicle manufacturers install on each engine they purchase from you under this section.

(5) Describe in your application for certification how you plan to use the provisions of this section and any steps you plan to take under paragraph (b)(3) of this section.

(6) Keep records to document how many engines you produce under this exemption. Also, keep records to document your contractual agreements under paragraph (b)(3) of this section. Keep all these records for five years after the end of the model year and make them available to us upon request.

(7) Make sure the engine has the emission control information label we require under the standard-setting part.

(c) If you do not include the cost of all aftertreatment components in the cost of the engine, you must meet all the conditions described in paragraphs (b)(1) through (7) of this section, with the following additional provisions:

(1) The contractual agreement described in paragraph (b)(3) of this section must include a commitment that the vehicle manufacturer will do the following things:

(i) Separately purchase the aftertreatment components you have specified in your application for certification.

(ii) Perform audits as described in paragraph (c)(3) of this section.

(2) Before you ship an engine under the provisions of this paragraph (c), you must have written confirmation that the vehicle manufacturer has ordered the appropriate aftertreatment components.

(3) You must audit vehicle manufacturers as follows:

(i) If you sell engines to 16 or more vehicle manufacturers under the provisions of this section, you must annually audit four vehicle manufacturers to whom you sell engines under this section. To select individual vehicle manufacturers, divide all the affected vehicle manufacturers into quartiles based on the number of engines they buy from you; select a single vehicle manufacturer from each quartile each model year. Vary the vehicle manufacturers you audit from year to year, though you may repeat an audit in a later model year if you find or suspect that a particular vehicle manufacturer is not properly installing aftertreatment devices.

(ii) If you sell engines to fewer than 16 vehicle manufacturers under the provisions of this section, set up a plan to audit each vehicle manufacturer on average once every four model years.

(iii) Starting with the 2014 model year, if you sell engines to fewer than 40 vehicle manufacturers under the provisions of this section, you may ask us to approve a reduced auditing rate. We may approve an alternate plan that involves auditing each vehicle manufacturer on average once every ten model years, as long as you show that you have met the auditing requirements in preceding years without finding noncompliance or improper procedures.

(iv) Audits must involve the assembling companies' facilities, procedures, and production records to monitor their compliance with your instructions, must include investigation of some assembled engines, and must confirm that the number of aftertreatment devices shipped were sufficient for the number of engines produced. Where a vehicle manufacturer is not located in the United States, you may conduct the audit at a distribution or port facility in the United States.

(v) If you produce engines and use them to produce vehicles under the provisions of this section, you must take steps to ensure that your facilities, procedures, and production records are set up to ensure compliance with the provisions of this section, but you may meet your auditing responsibilities under this paragraph (c)(3) of this section by maintaining a database showing how you pair aftertreatment components with the appropriate engines.

(vi) You must keep records of these audits for five years after the end of the model year and provide a report to us describing any uninstalled or improperly installed aftertreatment components. Send us these reports within 90 days of the audit, except as specified in paragraph (f) of this section.

(4) In your application for certification, give a detailed plan for auditing vehicle manufacturers, as described in paragraph (c)(3) of this section.

(d) An engine you produce under this section becomes new when it is fully assembled, except for aftertreatment devices, for the first time. Use this date to determine the engine's model year.

(e) Once the vehicle manufacturer takes possession of an engine exempted under this section, the exemption expires and the engine is subject to all the prohibitions in CleanAir Act section 203 (42 U.S.C. 7522).

(f) You must notify us within 15 days if you find from an audit or another source that a vehicle manufacturer has failed to meet its obligations under this section.

(g) We may suspend, revoke, or void an exemption under this section, as follows:

(1) We may suspend or revoke your exemption for the entire engine family if we determine that any of the engines are not in their certified configuration after installation in the vehicle, or if you fail to comply with the requirements of this section. If we suspend or revoke the exemption for any of your engine families under this paragraph (g), this exemption will not apply for future certificates unless you demonstrate that the factors causing the nonconformity do not apply to the other engine families. We may suspend or revoke the exemption for shipments to a single facility where final assembly occurs.

(2) We may void your exemption for the entire engine family if you intentionally submit false or incomplete information or fail to keep and provide to EPA the records required by this section.

(h) You are liable for the in-use compliance of any engine that is exempt under this section.

(i) It is a violation of the Act for any person to complete assembly of the exempted engine without complying fully with the installation instructions.

(j) [Reserved]

(k) You may ask us to provide a temporary exemption to allow you to complete production of your engines at different facilities, as long as you maintain control of the engines until they are in their certified configuration. We may require you to take specific steps to ensure that such engines are in their certified configuration before reaching the ultimate purchaser. You may request an exemption under this paragraph (k) in your application for certification, or in a separate submission.

■ 7. Section 85.2111 is amended by revising the introductory text and adding paragraph (d) to read as follows:

§ 85.2111 Warranty enforcement.

The following acts are prohibited and may subject a manufacturer to up to a $32,500 civil penalty for each offense, except as noted in paragraph (d) of this section:

* * * * *

(d) The maximum penalty value listed in this section is shown for calendar year 2004. Maximum penalty limits for later years may be adjusted based on the Consumer Price Index. The specific regulatory provisions for changing the maximum penalties, published in 40 CFR part 19, reference the applicable U.S. Code citation on which the prohibited action is based.

■ 8. Appendix II to subpart V is amended by revising section 1 of part A to read as follows:

Appendix II to Subpart V of Part 85—Arbitration Rules

Part A—Pre-Hearing

Section 1: Initiation of Arbitration

Either party may commence an arbitration under these rules by filing at any regional office of the American Arbitration Association (the AAA) three copies of a written submission to arbitrate under these rules, signed by either party. It shall contain a statement of the matter in dispute, the amount of money involved, the remedy sought, and the hearing locale requested, together with the appropriate administrative fee as provided in the Administrative Fee Schedule of the AAA in effect at the time the arbitration is filed. The filing party shall notify the MOD Director in writing within 14 days of when it files for arbitration and provide the MOD Director with the date of receipt of the bill by the part manufacturer.

Unless the AAA in its discretion determines otherwise and no party disagrees, the Expedited Procedures (as described in Part E of these Rules) shall be applied in any case where no disclosed claim or counterclaim exceeds $32,500, exclusive of interest and arbitration costs. Parties may also agree to the Expedited Procedures in cases involving claims in excess of $32,500.

All other cases, including those involving claims not in excess of $32,500 where either party so desires, shall be administered in accordance with Parts A through D of these Rules.

* * * * *

PART 86—CONTROL OF EMISSIONS FROM NEW AND IN-USE HIGHWAY VEHICLES AND ENGINES

■ 9. The authority citation for part 86 continues to read as follows:

Authority: 42 U.S.C. 7401–7671q.

■ 10. Section 86.004–16 is amended by revising paragraph (d) to read as follows:

§ 86.004–16 Prohibition of defeat devices.

* * * * *

(d) For vehicle and engine designs designated by the Administrator to be investigated for possible defeat devices:

(1) *General.* The manufacturer must show to the satisfaction of the Administrator that the vehicle or engine design does not incorporate strategies that reduce emission control effectiveness exhibited during the applicable Federal emissions test procedures when the vehicle or engine is operated under conditions which may reasonably be expected to be encountered in normal operation and use, unless one of the specific exceptions set forth in the definition of ''defeat device'' in § 86.004–2 has been met.

(2) *Information submissions required.* The manufacturer will provide an explanation containing detailed information (including information which the Administrator may request to be submitted) regarding test programs, engineering evaluations, design specifications, calibrations, on-board computer algorithms, and design strategies incorporated for operation both during and outside of the applicable Federal emission test procedure.

■ 11. Section 86.004–26 is amended by revising paragraph (c)(4) to read as follows:

§ 86.004–26 Mileage and service accumulation; emission measurements.

* * * * *

(c) * * *

(4) The manufacturer shall determine, for each engine family, the number of hours at which the engine system combination is stabilized for emission-data testing. The manufacturer shall maintain, and provide to the Administrator if requested, a record of the rationale used in making this determination. The manufacturer may elect to accumulate 125 hours on each test engine within an engine family without making a determination. Any engine used to represent emission-data engine selections under § 86.094–24(b)(2) shall be equipped with an engine system combination that has accumulated at least the number of hours determined under this paragraph. Complete exhaust emission tests shall be conducted for each emission-data engine selection under § 86.094–24(b)(2). Evaporative emission controls must be connected, as described in 40 CFR part 1065, subpart F. The Administrator may determine under § 86.094–24(f) that no testing is required.

* * * * *

■ 12. Section 86.007–11 is amended by revising paragraphs (a)(2) and (a)(3)(i) and adding paragraph (g)(6) to read as follows:

§ 86.007–11 Emission standards and supplemental requirements for 2007 and later model year heavy-duty engines and vehicles.

* * * * *

(a) * * *

(2) The standards set forth in paragraph (a)(1) of this section refer to the exhaust emitted over the duty cycle specified in paragraphs (a)(2)(i) through (iii) of this section, where exhaust emissions are measured and calculated as specified in paragraphs (a)(2)(iv) and (v) of this section in accordance with the procedures set forth in 40 CFR part 1065, except as noted in § 86.007–23(c)(2):

(i) Perform the test interval set forth in paragraph (f)(2) of Appendix I of this part with a cold-start according to 40 CFR part 1065, subpart F. This is the cold-start test interval.

(ii) Shut down the engine after completing the test interval and allow 20 minutes to elapse. This is the hot-soak.

(iii) Repeat the test interval. This is the hot-start test interval.

(iv) Calculate the total emission mass of each constituent, m, and the total work, W, over each test interval according to 40 CFR 1065.650.

(v) Determine your engine's brake-specific emissions using the following calculation, which weights the emissions from the cold-start and hot-start test intervals:

$$\text{brake-specific emissions} = \frac{m_{\text{cold-start}} + 6\square m_{\text{hot-start}}}{W_{\text{cold-start}} + 6\square W_{\text{hot-start}}}$$

(3) * * *

(i) Exhaust emissions, as determined under § 86.1360–2007(b) pertaining to the supplemental emission test cycle, for each regulated pollutant shall not exceed 1.0 times the applicable emission standards or FELs specified in paragraph (a)(1) of this section.

* * * * *

(g) * * *

(6) Manufacturers may determine the number of engines and vehicles that are required to certify to the NO_X standard in this section (including the phase-out engines certified to the NO_X+NMHC standard referenced in this paragraph(g)) based on calendar years 2007, 2008, and 2009, rather than model years 2007, 2008, and 2009.

* * * * *

■ 13. Section 86.007–21 is amended by revising paragraph (o) to read as follows:

§ 86.007–21 Application for certification.

* * * * *

(o) For diesel heavy-duty engines, the manufacturer must provide the following additional information pertaining to the supplemental emission test conducted under § 86.1360–2007:

(1) Weighted brake-specific emissions data (*i.e.*, in units of g/bhp-hr), calculated according to 40 CFR 1065.650 for all pollutants for which a brake-specific emission standard is established in this subpart;

(2) For engines subject to the MAEL (see § 86.007–11(a)(3)(ii)), brake specific gaseous emission data for each of the 12 non-idle test points (identified under § 86.1360–2007(b)(1)) and the 3 EPA-selected test points (identified under § 86.1360–2007(b)(2));

(3) For engines subject to the MAEL (see § 86.007–11(a)(3)(ii)), concentrations and mass flow rates of all regulated gaseous emissions plus carbon dioxide;

(4) Values of all emission-related engine control variables at each test point;

(5) A statement that the test results correspond to the test engine selection criteria in 40 CFR 1065.401. The manufacturer also must maintain records at the manufacturer's facility which contain all test data, engineering analyses, and other information which provides the basis for this statement, where such information exists. The manufacturer must provide such information to the Administrator upon request;

(6) For engines subject to the MAEL (see § 86.007–11(a)(3)(ii)), a statement that the engines will comply with the weighted average emissions standard and interpolated values comply with the Maximum Allowable Emission Limits specified in § 86.007–11(a)(3) for the useful life of the engine where applicable. The manufacturer also must maintain records at the manufacturer's facility which contain a detailed description of all test data, engineering analyses, and other information which provides the basis for this statement, where such information exists. The manufacturer must provide such information to the Administrator upon request.

(7) [Reserved]

* * * * *

■ 14. Section 86.007–35 is amended by revising paragraph (c) to read as follows:

§ 86.007–35 Labeling.

* * * * *

(c) Vehicles powered by model year 2007 and later diesel-fueled engines must include permanent, readily visible labels on the dashboard (or instrument panel) and near all fuel inlets that state ''Use Ultra Low Sulfur Diesel Fuel Only''; or ''Ultra Low Sulfur DieselFuel Only''.

* * * * *

■ 15. Part 86 is amended by removing the first § 86.008–10, which was added on October 6, 2000.

■ 16. Section 86.084–2 is amended by revising the definition for ''Curb-idle'' to read as follows:

§ 86.084–2 Definitions.

* * * * *

Curb-idle means:

(1) For manual transmission code light-duty trucks, the engine speed with the transmission in neutral or with the clutch disengaged and with the air conditioning system, if present, turned off. For automatic transmission code light-duty trucks, curb-idle means the engine speed with the automatic transmission in the Park position (or Neutral position if there is no Park position), and with the air conditioning system, if present, turned off.

(2) For manual transmission code heavy-duty engines, the manufacturer's recommended engine speed with the clutch disengaged. For automatic transmission code heavy-duty engines, curb idle means the manufacturer's recommended engine speed with the automatic transmission in gear and the output shaft stalled. (Measured idle speed may be used in lieu of curb-idle speed for the emission tests when the difference between measured idle speed and curb idle speed is sufficient to cause a void test under 40 CFR 1065.530 but not sufficient to permit adjustment in accordance with 40 CFR part 1065, subpart E.

* * * * *

■ 17. Section 86.095–35 is amended by revising paragraph (a)(3)(iii)(B) to read as follows:

§ 86.095–35 Labeling.

* * * * *

(a) * * *

(3) * * *

(iii) * * *

(B) The full corporate name and trademark of the manufacturer; though the label may identify another company and use its trademark instead of the manufacturer's as long as the manufacturer complies with the provisions of 40CFR 1039.640.

* * * * *

■ 18. Section 86.096–38 is amended by revising paragraph (g)(19)(iii) to read as follows:

§ 86.096–38 Maintenance instructions.

* * * * *

(g) * * *

(19) * * *

(iii) Any person who violates a provision of this paragraph (g) shall be subject to a civil penalty of not more than $32,500 per day for each violation. This maximum penalty is shown for calendar year 2004. Maximum penalty limits for later years may be set higher based on the Consumer Price Index, as specified in 40 CFR part 19. In addition, such person shall be liable for all other remedies set forth in Title II of the Clean Air Act, remedies pertaining to provisions of Title II of the Clean Air Act, or other applicable provisions of law.

■ 19. Section 86.121–90 is amended by revising paragraph (d) introductory text to read as follows:

§ 86.121–90 Hydrocarbon analyzer calibration.

* * * * *

(d) *FID response factor to methane.* When the FID analyzer is to be used for the analysis of gasoline, diesel, methanol, ethanol, liquefied petroleum gas, and natural gas-fueled vehicle hydrocarbon samples, the methane

response factor of the analyzer must be established. To determine the total hydrocarbon FID response to methane, known methane in air concentrations traceable to the National Institute of Standards andTechnology (NIST) must be analyzed by the FID. Several methane concentrations must be analyzed by the FID in the range of concentrations in the exhaust sample. The total hydrocarbon FID response to methane is calculated as follows:

r_{CH4}=FIDppm/SAMppm

Where:

* * * * *

■ 20. Section 86.144–94 is amended by revising paragraph (c)(8)(vi) to read as follows:

§ 86.144–94 Calculations; exhaust emissions.

* * * * *

(c) * * *

(8) * * *

(vi) rCH4=HC FID response to methane as measured in § 86.121(d).

* * * * *

■ 21. Section 86.158–00 is amended by revising the introductory text to read as follows:

§ 86.158–00 Supplemental Federal Test Procedures; overview.

The procedures described in §§ 86.158–00, 86.159–00, 86.160–00, and 86.162–00 discuss the aggressive driving (US06) and air conditioning (SC03) elements of the Supplemental Federal Test Procedures (SFTP). These test procedures consist of two separable test elements: A sequence of vehicle operation that tests exhaust emissions with a driving schedule (US06) that tests exhaust emissions under high speeds and accelerations (aggressive driving); and a sequence of vehicle operation that tests exhaust emissions with a driving schedule (SC03) which includes the impacts of actual air conditioning operation. These test procedures (and the associated standards set forth in subpart S of this part) are applicable to light-duty vehicles and light-duty trucks.

* * * * *

■ 22. Section 86.159–00 is amended by revising paragraph (f)(2)(ix) to read as follows:

§ 86.159–00 Exhaust emission test procedure for US06 emissions.

* * * * *

(f) * * *

(2) * * *

(ix) Turn the engine off 2 seconds after the end of the last deceleration (i.e., engine off at 596 seconds).

* * * * *

■ 23. Section 86.160–00 is amended by revising the first sentence of paragraph (a), and paragraphs (c)(10), (c)(12), (d)(10), and (d)(13) to read as follows:

§ 86.160–00 Exhaust emission test procedure for SC03 emissions.

(a) Overview. The dynamometer operation consists of a single, 600 second test on the SC03 driving schedule, as described in appendix I, paragraph (h), of this part. * * *

* * * * *

(c) * * *

(10) Eighteen seconds after the engine starts, begin the initial vehicle acceleration of the driving schedule.

* * * * *

(12) Turn the engine off 2 seconds after the end of the last deceleration (i.e., engine off at 596 seconds).

* * * * *

(d) * * *

(10) Turn the engine off 2 seconds after the end of the last deceleration (i.e., engine off at 596 seconds).

* * * * *

(13) Immediately after the end of the sample period, turn off the cooling fan, disconnect the exhaust tube from the vehicle tailpipe(s), and drive the vehicle from dynamometer.

* * * * *

■ 24. Section 86.161–00 is amended by revising paragraph (b)(1) to read as follows:

§ 86.161–00 Air conditioning environmental test facility ambient requirements.

* * * * *

(b) * * *

(1) Ambient humidity is controlled, within the test cell, during all phases of the air conditioning test sequence to an average of 100 +/ − 5 grains of water/pound of dry air.

* * * * *

■ 25. Section 86.164–00 is amended by revising paragraph (c)(1)(i) introductory text to read as follows:

§ 86.164–00 Supplemental federal test procedure calculations.

* * * * *

(c)(1) * * *

(i) $Y_{WSFTP} = 0.35(Y_{FTP}) + 0.37(Y_{SC03}) + 0.28(Y_{US06})$

Where:

* * * * *

■ 26. Section 86.410–2006 is amended by adding paragraph (e)(3) to read as follows:

§ 86.410–2006 Emission standards for 2006 and later model year motorcycles.

* * * * *

(e) * * *

(3) Small-volume manufacturers are not required to comply with permeation requirements in paragraph (g) of this section until model year 2010.

* * * * *

■ 27. A new § 86.413–2006 is added to read as follows:

§ 86.413–2006 Labeling.

(a)(1) The manufacturer of any motorcycle shall, at the time of manufacture, affix a permanent, legible label, of the type and in the manner described in this section, containing the information provided in this section, to all production models of such vehicles available for sale to the public and covered by a certificate of conformity.

(2) A permanent, legible label shall be affixed in a readily accessible position. Multi-part labels may be used.

(3) The label shall be affixed by the vehicle manufacturer who has been issued the certificate of conformity for such vehicle, in such a manner that it cannot be removed without destroying or defacing the label, and shall not be affixed to any part which is easily detached from the vehicle or is likely to be replaced during the useful life of the vehicle.

(4) The label shall contain the following information lettered in the English language in block letters and numerals, which shall be of a color that contrasts with the background of the label:

(i) The label heading shall read: ''Vehicle Emission Control Information'';

(ii) Full corporate name and trademark of the manufacturer;

(iii) Engine displacement (in cubic centimeters or liters) and engine family identification;

(iv) Engine tuneup specifications and adjustments, as recommended by the manufacturer, including, if applicable: idle speed, ignition timing, and the idle air-fuel mixture setting procedure and value (*e.g.,* idle CO, idle air-fuel ratio, idle speed drop). These specifications shall indicate the proper transmission position during tuneup, and which accessories should be in operation and which systems should be disconnected during a tuneup;

(v) Any specific fuel or engine lubricant requirements (*e.g.,* lead content, research octane number, engine lubricant type);

(vi) Identification of the exhaust emission control system, using abbreviations in accordance with SAE J1930, June 1993, including the following abbreviations for items commonly appearing on motorcycles:

OC Oxidation catalyst;
TWC Three-way catalyst;
AIR Secondary air injection (pump);
PAIR Pulsed secondary air injection;
DFI Direct fuel injection;
O2S Oxygen sensor;
HO2S Heated oxygen sensor;
EM Engine modification;
CFI Continuous fuel injection;
MFI Multi-port (electronic) fuel injection; and
TBI Throttle body (electronic) fuel injection.

(viii) An unconditional statement of conformity to U.S. EPA regulations which includes the model year; for example, ''This Vehicle Conforms to U.S. EPA Regulations Applicable to____Model Year New Motorcycles'' (the blank is to be filled in with the appropriate model year). For all Class III motorcycles and for Class I and Class II motorcycles demonstrating compliance with the averaging provisions in 40 CFR 86.449 the statement must also include the phrase ''is certified to an $HC+NO_X$ emission standard of __ grams/kilometer'' (the blank is to be filled in with the Family Emission Limit determined by the manufacturer).

(b) The provisions of this section shall not prevent a manufacturer from also reciting on the label that such vehicle conforms to any other applicable Federal or State standards for new motorcycles or any other information that such manufacturer deems necessary for, or useful to, the proper operation and satisfactory maintenance of the vehicle.

■ 28. Section 86.447–2006 is revised to read as follows:

§ 86.447–2006 What provisions apply to motorcycle engines below 50 cc that are certified under the Small SI program or the Recreational-vehicle program?

(a) *General provisions.* If you are an engine manufacturer, this section allows you to introduce into commerce a new highway motorcycle (that is, a motorcycle that is a motor vehicle) if it has an engine below 50 cc that is already certified to the requirements that apply to engines or vehicles under 40 CFR part 90 or 1051 for the appropriate model year. If you comply with all the provisions of this section, we consider the certificate issued under 40 CFR part 90 or 1051 for each engine or vehicle to also be a valid certificate of conformity under this part 86 for its model year, without a separate application for certification under the requirements of this part 86. See § 86.448–2006 for similar provisions that apply to vehicles that are certified to chassis-based standards under 40CFR part 1051.

(b) *Vehicle-manufacturer provisions.* If you are not an engine manufacturer, you may produce highway motorcycles using nonroad engines below 50 cc under this section as long as you meet all the requirements and conditions specified in paragraph (d) of this section. If you modify the nonroad engine in any of the ways described in paragraph (d)(2) of this section for installation in a highway motorcycle, we will consider you a manufacturer of a new highway motorcycle. Such engine modifications prevent you from using the provisions of this section.

(c) *Liability.* Engines for which you meet the requirements of this section, and vehicles containing these engines, are exempt from all the requirements and prohibitions of this part, except for those specified in this section. Engines and vehicles exempted under this section must meet all the applicable requirements from 40 CFR part 90 or 1051. This applies to engine manufacturers, vehicle manufacturers who use these engines, and all other persons as if these engines were used in recreational vehicles or other nonroad applications. The prohibited acts of 42 U.S.C. 7522 apply to these new highway motorcycles; however, we consider the certificate issued under 40 CFR part 90 or 1051 for each engine to also be a valid certificate of conformity under this part 86 for its model year. If we make a determination that these engines do not conform to the regulations during their useful life, we may require you to recall them under 40 CFR part 86, 90, or 1068.

(d) *Specific requirements.* If you are an engine or vehicle manufacturer and meet all the following criteria and requirements regarding your new engine or vehicle, the highway motorcycle is eligible for an exemption under this section:

(1) Your engine must be below 50 cc and must be covered by a valid certificate of conformity for Class II engines issued under 40 CFR part 90 or for recreational vehicles under 40 CFR part 1051.

(2) You must not make any changes to the certified engine that could reasonably be expected to increase its exhaust emissions for any pollutant, or its evaporative emissions, if applicable. For example, if you make any of the following changes to one of these engines, you do not qualify for this exemption:

(i) Change any fuel system or evaporative system parameters from the certified configuration.

(ii) Change, remove, or fail to properly install any other component, element of design, or calibration specified in the engine manufacturer's application for certification. This includes aftertreatment devices and all related components.

(iii) Modify or design the engine cooling system so that temperatures or heat rejection rates are outside the original engine manufacturer's specified ranges.

(3) You must show that fewer than 50 percent of the engine family's total sales in the United States are used in highway motorcycles. This includes engines used in any application, without regard to which company manufactures the vehicle or equipment. In addition, if you manufacture highway motorcycles, you must show that fewer than 50 percent of the engine family's total sales in the United States are highway motorcycles. Show that you meet the engine-sales criterion as follows:

(i) If you are the original manufacturer of the engine, base this showing on your sales information.

(ii) In all other cases, you must get the original manufacturer of the engine to confirm the engine sales volumes based on its sales information.

(4) You must ensure that the engine has the label we require under 40 CFR part 90 or 1051.

(5) You must add a permanent supplemental label to the engine in a position where it will remain clearly visible after installation in the vehicle. In the supplemental label, do the following:

(i) Include the heading: ''HIGHWAY MOTORCYCLE ENGINE EMISSION CONTROL INFORMATION''.

(ii) Include your full corporate name and trademark. You may instead include the full corporate name and trademark of another company you choose to designate.

(iii) State: ''THIS ENGINE WAS ADAPTED FOR HIGHWAY USE WITHOUTAFFECTING ITS EMISSION CONTROLS.''.

(iv) State the date you finished installation (month and year), if applicable.

(6) Send the Designated Compliance Officer a signed letter by the end of each calendar year (or less often if we tell you) with all the following information:

(i) Identify your full corporate name, address, and telephone number.

(ii) List the engine or vehicle models you expect to produce under this exemption in the coming year.

(iii) State: ''We produce each listed [engine or vehicle] model for without making any changes that could increase its certified emission levels, as described in 40 CFR 86.447–2006.''.

(e) *Failure to comply.* If your highway motorcycles do not meet the criteria listed in paragraph (d) of this section, they will be subject to the standards,

requirements, and prohibitions of this part 86 and the certificate issued under 40 CFR part 90 or 1051 will not be deemed to also be a certificate issued under this part 86. Introducing these engines into commerce without a valid exemption or certificate of conformity under this part violates the prohibitions in 40 CFR part 85.

(f) *Data submission.* We may require you to send us emission test data on any applicable nonroad duty cycles.

(g) *Participation in averaging, banking and trading.* Engines or vehicles adapted for recreational use under this section may not generate or use emission credits under this part 86. These engines or vehicles may generate credits under the ABT provisions in 40 CFR part 90 or 1051. These engines or vehicles must use emission credits under 40 CFR part 90 or 1051 if they are certified to an FEL that exceeds an applicable standard.

■ 29. Section 86.448–2006 is revised to read as follows:

§ 86.448–2006 What provisions apply to vehicles certified under the Recreational-vehicle program?

(a) *General provisions.* If you are a highway-motorcycle manufacturer, this section allows you to introduce into commerce a new highway motorcycle with an engine below 50 cc if it is already certified to the requirements that apply to recreational vehicles under 40 CFR parts 1051. A highway motorcycle is a motorcycle that is a motor vehicle. If you comply with all of the provisions of this section, we consider the certificate issued under 40 CFR part 1051 for each recreational vehicle to also be a valid certificate of conformity for the motor vehicle under this part 86 for its model year, without a separate application for certification under the requirements of this part 86. See § 86.447–2006 for similar provisions that apply to nonroad engines produced for highway motorcycles.

(b) *Nonrecreational-vehicle provisions.* If you are not a recreational-vehicle manufacturer, you may produce highway motorcycles from recreational vehicles with engines below 50 cc under this section as long as you meet all the requirements and conditions specified in paragraph (d) of this section. If you modify the recreational vehicle or its engine in any of the ways described in paragraph (d)(2) of this section for installation in a highway motorcycle, we will consider you a manufacturer of a new highway motorcycle. Such modifications prevent you from using the provisions of this section.

(c) *Liability.* Vehicles for which you meet the requirements of this section are exempt from all the requirements and prohibitions of this part, except for those specified in this section. Engines and vehicles exempted under this section must meet all the applicable requirements from 40 CFR part 1051. This applies to engine manufacturers, vehicle manufacturers, and all other persons as if the highway motorcycles were recreational vehicles. The prohibited acts of 42 U.S.C. 7522 apply to these new highway motorcycles; however, we consider the certificate issued under 40 CFR part 1051 for each recreational vehicle to also be a valid certificate of conformity for the highway motorcycle under this part 86 for its model year. If we make a determination that these engines or vehicles do not conform to the regulations during their useful life, we may require you to recall them under 40 CFR part 86 or 40 CFR 1068.505.

(d) *Specific requirements.* If you are a recreational-vehicle manufacturer and meet all the following criteria and requirements regarding your new highway motorcycle and its engine, the highway motorcycle is eligible for an exemption under this section:

(1) Your motorcycle must have an engine below 50 cc and it must be covered by a valid certificate of conformity as a recreational vehicle issued under 40 CFR part 1051.

(2) You must not make any changes to the certified recreational vehicle that we could reasonably expect to increase its exhaust emissions for any pollutant, or its evaporative emissions if it is subject to evaporative-emission standards. For example, if you make any of the following changes, you do not qualify for this exemption:

(i) Change any fuel system parameters from the certified configuration.

(ii) Change, remove, or fail to properly install any other component, element of design, or calibration specified in the vehicle manufacturer's application for certification. This includes aftertreatment devices and all related components.

(iii) Modify or design the engine cooling system so that temperatures or heat rejection rates are outside the original vehicle manufacturer's specified ranges.

(3) You must show that fewer than 50 percent of the engine family's total sales in the United States are used in highway motorcycles. This includes highway and off-highway motorcycles, without regard to which company completes the manufacturing of the highway motorcycle. Show this as follows:

(i) If you are the original manufacturer of the vehicle, base this showing on your sales information.

(ii) In all other cases, you must get the original manufacturer of the vehicle to confirm this based on their sales information.

(4) The highway motorcycle must have the vehicle emission control information we require under 40 CFR part 1051.

(5) You must add a permanent supplemental label to the highway motorcycle in a position where it will remain clearly visible. In the supplemental label, do the following:

(i) Include the heading: ''HIGHWAY MOTORCYCLE ENGINE EMISSION CONTROL INFORMATION''.

(ii) Include your full corporate name and trademark. You may instead include the full corporate name and trademark of another company you choose to designate.

(iii) State: ''THIS VEHICLE WAS ADAPTED FOR HIGHWAY USE WITHOUT AFFECTING ITS EMISSION CONTROLS.''.

(iv) State the date you finished modifying the vehicle (month and year), if applicable.

(6) Send the Designated Compliance Officer a signed letter by the end of each calendar year (or less often if we tell you) with all the following information:

(i) Identify your full corporate name, address, and telephone number.

(ii) List the highway motorcycle models you expect to produce under this exemption in the coming year.

(iii) State: ''We produced each listed highway motorcycle without making any changes that could increase its certified emission levels, as described in 40 CFR 86.448–2006.''.

(e) *Failure to comply.* If your highway motorcycles do not meet the criteria listed in paragraph (d) of this section, they will be subject to the standards, requirements, and prohibitions of this part 86 and 40 CFR part 85, and the certificate issued under 40 CFR part 1051 will not be deemed to also be a certificate issued under this part 86. Introducing these motorcycles into commerce without a valid exemption or certificate of conformity under this part violates the prohibitions in 40 CFR part 85.

(f) *Data submission.* We may require you to send us emission test data on the duty cycle for Class I motorcycles.

(g) *Participation in averaging, banking and trading.* Recreational vehicles adapted for use as highway motorcycles under this section may not generate or use emission credits under this part 86. These engines may generate credits under the ABT provisions in 40 CFR part 1051. These engines must use emission credits under 40 CFR part

1051 if they are certified to an FEL that exceeds an applicable standard.

■ 30. In § 86.513–2004, Table 1 in paragraph (a)(1) is revised to read as follows:

§ 86.513–2004 Fuel and engine lubricant specifications.

* * * * *

(a) * * *

(1) * * *

TABLE 1 OF § 86.513–2004—GASOLINE TEST FUEL SPECIFICATIONS

Item	Procedure	Value
Distillation Range:		
1. Initial boiling point, °C	ASTM D 86–97	23.9—35.0 [1]
2. 10% point, °C	ASTM D 86–97	48.9—57.2
3. 50% point, °C	ASTM D 86–97	93.3—110.0
4. 90% point, °C	ASTM D 86–97	148.9—162.8
5. End point, °C	ASTM D 86–97	212.8
Hydrocarbon composition:		
1. Olefins, volume %	ASTM D 1319–98	10 maximum
2. Aromatics, volume %	ASTM D 1319–98	35 maximum
3. Saturates	ASTM D 1319–98	Remainder
Lead (organic), g/liter	ASTM D 3237	0.013 maximum
Phosphorous, g/liter	ASTM D 3231	0.0013 maximum
Sulfur, weight %	ASTM D 1266	0.008 maximum
Volatility (Reid Vapor Pressure), kPa	ASTM D 323	55.2 to 63.4 [1]

[1] For testing at altitudes above 1,219 m, the specified volatility range is 52 to 55 kPa and the specified initial boiling point range is (23.9 to 40.6) °C.

* * * * *

■ 31. Section 86.884–8 is amended by revising paragraph (c) introductory text to read as follows:

§ 86.884–8 Dynamometer and engine equipment.

* * * * *

(c) An exhaust system with an appropriate type of smokemeter placed no more than 32 feet from the exhaust manifold(s), turbocharger outlet(s), exhaust aftertreatment device(s), or crossover junction (on Vee engines), whichever is farthest downstream. The smoke exhaust system shall present an exhaust backpressure within ±0.2 inch Hg of the upper limit at maximum rated horsepower, as established by the engine manufacturer in his sales and service literature for vehicle application. The following options may also be used:

* * * * *

■ 32. Section 86.884–10 is amended by revising paragraph (a) introductory text to read as follows:

§ 86.884–10 Information.

* * * * *

(a) Engine description and specifications. A copy of the information specified in this paragraph must accompany each engine sent to the Administrator for compliance testing. If the engine is submitted to the Administrator for testing under subpart N of this part or 40 CFR part 1065, only the specified information need accompany the engine. The manufacturer need not record the information specified in this paragraph for each test if the information, with the exception of paragraphs (a)(3), (a)(12), and (a)(13) of this section, is included in the manufacturer's part I.

* * * * *

■ 33. Section 86.884–12 is amended by revising paragraph (c)(2) to read as follows:

§ 86.884–12 Test run.

* * * * *

(c) * * *

(2) Warm up the engine by the procedure described in 40 CFR 1065.530.

* * * * *

■ 34. Section 86.1005–90 is amended by revising paragraphs (a)(1)(i), (a)(1)(ii), (a)(2)(vi)(A), and (a)(2)(vi)(B) to read as follows:

§ 86.1005–90 Maintenance of records; submittal of information.

(a) * * *

(1) * * *

(i) If testing heavy-duty gasoline-fueled or methanol-fueled Otto-cycle engines, the equipment requirements specified in 40 CFR part 1065, subparts B and C;

(ii) If testing heavy-duty petroleum-fueled or methanol-fueled diesel engines, the equipment requirements specified in 40 CFR part 1065, subparts B and C;

* * * * *

(2) * * *

(vi) * * *

(A) If testing gasoline-fueled or methanol-fueled Otto-cycle heavy-duty engines, the record requirements specified in 40 CFR 1065.695;

(B) If testing petroleum-fueled or methanol-fueled diesel heavy-duty engines, the record requirements specified in 40 CFR 1065.695;

* * * * *

■ 35. Section 86.1108–87 is amended by revising paragraphs (a)(1)(i), (a)(1)(ii), (a)(2)(vi)(A), and (a)(2)(vi)(B) to read as follows:

§ 86.1108–87 Maintenance of records.

(a) * * *

(1) * * *

(i) If testing heavy-duty gasoline engines, the equipment requirements specified in 40 CFR part 1065, subparts B and C;

(ii) If testing heavy-duty diesel engines, the equipment requirements specified in 40 CFR part 1065, subparts B and C;

* * * * *

(2) * * *

(vi) * * *

(A) If testing heavy-duty gasoline engines, the record requirements specified in 40 CFR 1065.695;

(B) If testing heavy-duty diesel engines, the record requirements specified in 40 CFR 1065.695;

* * * * *

■ 36. A new § 86.1213–08 is added to read as follows:

§ 86.1213–08 Fuel specifications.

The test fuels listed in 40 CFR part 1065, subpart H, shall be used for evaporative emission testing.

■ 37. Section 86.1301–90 is redesignated as § 86.1301 and revised to read as follows:

§ 86.1301 Scope; applicability.

This subpart specifies gaseous emission test procedures for Otto-cycle and diesel heavy-duty engines, and particulate emission test procedures for diesel heavy-duty engines, as follows:

(a) For model years 1990 through 2003, manufacturers must use the test procedures specified in § 86.1305–90.

(b) For model years 2004 through 2009, manufacturers may use the test procedures specified in § 86.1305–2004 or § 86.1305–2010. For any EPA testing before the 2010 model year, EPA will use the manufacturer's selected procedures for mapping engines, generating duty cycles, and applying cycle-validation criteria. For any other parameters,EPA may conduct testing using either of the specified procedures.

(c) For model years 2010 and later, manufacturers must use the test procedures specified in § 86.1305–2010.

(d) As allowed under subpart A of this part, manufacturers may use carryover data from previous model years to demonstrate compliance with emission standards, without regard to the provisions of this section.

■ 38. Section 86.1304–90 is redesignated as § 86.1304 and amended by revising paragraph (a) to read as follows:

§ 86.1304 Section numbering; construction.

(a) *Section numbering*. The model year of initial applicability is indicated by the section number. The digits following the hyphen designate the first model year for which a section is applicable. The section continues to apply to subsequent model years unless a later model year section is adopted. (Example: § 86.13xx–2004 applies to the 2004 and subsequent model years. If a § 86.13xx–2007 is promulgated it would apply beginning with the 2007 model year; § 86.13xx–2004 would apply to model years 2004 through 2006.)

* * * * *

■ 39. A new § 86.1305–2010 is added to read as follows:

§ 86.1305–2010 Introduction; structure of subpart.

(a) This subpart specifies the equipment and procedures for performing exhaust-emission tests on Otto-cycle and diesel-cycle heavy-duty engines. Subpart A of this part sets forth the emission standards and general testing requirements to comply with EPA certification procedures.

(b) Use the applicable equipment and procedures for spark-ignition or compression-ignition engines in 40 CFR part 1065 to determine whether engines meet the duty-cycle emission standards in subpart A of this part. Measure the emissions of all regulated pollutants as specified in 40 CFR part 1065. Use the duty cycles and procedures specified in § 86.1333–2007, § 86.1360–2007, and § 86.1362–2007. Adjust emission results from engines using aftertreatment technology with infrequent regeneration events as described in § 86.004–28.

(c) The provisions in § 86.1370–2007 and § 86.1372–2007 apply for determining whether an engine meets the applicable not-to-exceed emission standards.

(d) Measure smoke using the procedures in subpart I of this part for evaluating whether engines meet the smoke standards in subpart A of this part.

(e) Use the fuels specified in 40 CFR part 1065 to perform valid tests, as follows:

(1) For service accumulation, use the test fuel or any commercially available fuel that is representative of the fuel that in-use engines will use.

(2) For diesel-fueled engines, use the ultra low-sulfur diesel fuel specified in 40 CFR part 1065 for emission testing.

(f) You may use special or alternate procedures to the extent we allow them under 40 CFR 1065.10.

(g) This subpart applies to you as a manufacturer, and to anyone who does testing for you.

■ 40. Section 86.1321–90 is amended by revising paragraph (a)(3)(ii) to read as follows:

§ 86.1321–90 Hydrocarbon analyzer calibration.

* * * * *

(a) * * *

(3) * * *

(ii) The HFID optimization procedures outlined in § 86.331–79(c).

* * * * *

■ 41. Section 86.1321–94 is amended by revising paragraph (a)(3)(ii) to read as follows:

§ 86.1321–94 Hydrocarbon analyzer calibration.

* * * * *

(a) * * *

(3) * * *

(ii) The procedure listed in § 86.331–79(c).

* * * * *

■ 42. A new § 86.1333–2010 is added to read as follows:

§ 86.1333–2010 Transient test cycle generation.

(a) *Generating transient test cycles*. The heavy-duty transient engine cycles for Otto-cycle and diesel engines are listed in Appendix I((f) (1), (2) and (3)) to this part. These second-by-second listings represent torque and rpm maneuvers characteristic of heavy-duty engines. Both rpm and torque are normalized (expressed as a percentage of maximum) in these listings.

(1) To unnormalize rpm, use the following equations:

(i) For diesel engines:

$$\text{Actualrpm} = \frac{\%\text{rpm} \cdot (\text{MaxTestSpeed} - \text{CurbIdleSpeed})}{112} + \text{CurbIdleSpeed}$$

Where:

MaxTestSpeed = the maximum test speed as calculated in 40 CFR part 1065.

(ii) For Otto-cycle engines:

$$\text{Actualrpm} = \frac{\%\text{rpm} \cdot (\text{MaxTestSpeed} - \text{CurbIdleSpeed})}{112} + \text{CurbIdleSpeed}$$

Where:

MaxTestSpeed = the maximum test speed as calculated in 40 CFR part 1065.

(2) Torque is normalized to the maximum torque at the rpm listed with it. Therefore, to unnormalize the torque values in the cycle, the maximum torque curve for the engine in question must be used. The generation of the

maximum torque curve is described in 40 CFR part 1065.

(b) *Example of the unnormalization procedure.* Unnormalize the following test point, given Maximum Test speed = 3800 rpm and Curb Idle Speed = 600 rpm.

PercentRPM	PercentTorque
43	82

(1) Calculate actual rpm:

$$\text{Actualrpm} = \frac{43 \cdot (3800 - 600)}{112} + 600 = 1{,}829\text{rpm}$$

(2) Determine actual torque: Determine the maximum observed torque at 1829 rpm from the maximum torque curve. Then multiply this value (e.g., 358 ft-lbs) by 0.82. This results in an actual torque of 294 ft-lbs.

(c) *Clutch operation.* Manual transmission engines may be tested with a clutch. If used, the clutch shall be disengaged at all zero percent speeds, zero percent torque points, but may be engaged up to two points preceding a non-zero point, and may be engaged for time segments with zero percent speed and torque points of durations less than four seconds. (See 40 CFR 1065.514 for allowances in the cycle validation criteria.)

■ 43. Section 86.1360–2007 is amended by revising paragraph (b), removing and reserving paragraphs (c) and (e), and removing paragraphs (h) and (i) to read as follows:

§ 86.1360–2007 Supplemental emission test; test cycle and procedures.

* * * * *

(b) *Test cycle.* (1) Perform testing as described in § 86.1362–2007 for determining whether an engine meets the applicable standards when measured over the supplemental emission test.

(2) For engines not certified to a NO_X standard or FEL less than 1.5 g/bhp-hr, EPA may select, and require the manufacturer to conduct the test using, up to three discrete test points within the control area defined in paragraph (d) of this section. EPA will notify the manufacturer of these supplemental test points in writing in a timely manner before the test. Emission sampling for these discrete test modes must include all regulated pollutants except particulate matter.

* * * * *

■ 44. A new § 86.1362–2007 is added to read as follows:

§ 86.1362–2007 Steady-state testing with a ramped-modal cycle.

This section describes how to test engines under steady-state conditions. Manufacturers may alternatively use the procedures specified in § 86.1363–2007 through the 2009 model year.

(a) Start sampling at the beginning of the first mode and continue sampling until the end of the last mode. Calculate emissions as described in 40 CFR 1065.650 and cycle statistics as described in 40 CFR 1065.514.

(b) Measure emissions by testing the engine on a dynamometer with the following ramped-modal duty cycle to determine whether it meets the applicable steady-state emission standards:

RMC mode	Time in mode (seconds)	Engine speed[1,2]	Torque (percent)[2,3]
1a Steady-state	170	Warm Idle	0
1b Transition	20	Linear Transition	Linear Transition
2a Steady-state	170	A	100
2b Transition	20	A	Linear Transition
3a Steady-state	102	A	25
3b Transition	20	A	Linear Transition
4a Steady-state	100	A	75
4b Transition	20	A	Linear Transition
5a Steady-state	103	A	50
5b Transition	20	Linear Transition	Linear Transition
6a Steady-state	194	B	100
6b Transition	20	B	Linear Transition
7a Steady-state	219	B	25
7b Transition	20	B	Linear Transition
8a Steady-state	220	B	75
8b Transition	20	B	Linear Transition
9a Steady-state	219	B	50
9b Transition	20	Linear Transition	Linear Transition
10a Steady-state	171	C	100
10b Transition	20	C	Linear Transition
11a Steady-state	102	C	25
11b Transition	20	C	Linear Transition
12a Steady-state	100	C	75
12b Transition	20	C	Linear Transition
13a Steady-state	102	C	50
13b Transition	20	Linear Transition	Linear Transition
14 Steady-state	168	Warm Idle	0

[1] Speed terms are defined in 40 CFR part 1065.

[2] Advance from one mode to the next within a 20-second transition phase. During the transition phase, command a linear progression from the speed or torque setting of the current mode to the speed or torque setting of the next mode.

[3] The percent torque is relative to maximum torque at the commanded engine speed.

(c) During idle mode, operate the engine with the following parameters:

(1) Hold the speed within your specifications.

(2) Set the engine to operate at its minimum fueling rate.

(3) Keep engine torque under 5 percent of maximum test torque.

(d) For full-load operating modes, operate the engine at its maximum fueling rate.

(e) See 40 CFR part 1065 for detailed specifications of tolerances and calculations.

(f) Perform the ramped-modal test with a warmed-up engine. If the ramped-modal test follows directly after testing over the Federal Test Procedure, consider the engine warm. Otherwise, operate the engine to warm it up as described in 40 CFR part 1065, subpart F.

■ 45. A new § 86.1363–2007 is added to read as follows:

§ 86.1363–2007 Steady-state testing with a discrete-mode cycle.

This section describes an alternate procedure for steady-state testing that manufacturers may use through the 2009 model year.

(a) Use the following 13-mode cycle in dynamometer operation on the test engine:

Mode number	Engine speed [1]	Percent load [2]	Weighting factors	Mode length (minutes) [3]
1	Idle	.....	0.15	4
2	A	100	0.08	2
3	B	50	0.10	2
4	B	75	0.10	2
5	A	50	0.05	2
6	A	75	0.05	2
7	A	25	0.05	2
8	B	100	0.09	2
9	B	25	0.10	2
10	C	100	0.08	2
11	C	25	0.05	2
12	C	75	0.05	2
13	C	50	0.05	2

[1] Speed terms are defined in 40 CFR part 1065.
[2] The percent torque is relative to the maximum torque at the commanded test speed.
[3] The percent torque is relative to maximum torque at the commanded engine speed.

(b) Prior to beginning the test sequence, the engine must be warmed-up according to the procedures in § 86.1332–90(d)(3)(i) through (iv).

(c) The test must be performed in the order of the mode numbers in paragraph (a) of this section. Where applicable, the EPA-selected test points identified under § 86.1360–2007(b)(2) must be performed immediately upon completion of mode 13. The engine must be operated for the prescribed time in each mode, completing engine speed and load changes in the first 20 seconds of each mode. The specified speed must be held to within±50 rpm and the specified torque must be held to within plus or minus two percent of the maximum torque at the test speed.

(d) One filter shall be used for sampling PM over the 13-mode test procedure. The modal weighting factors specified in paragraph (a) of this section shall be taken into account by taking a sample proportional to the exhaust mass flow during each individual mode of the cycle. This can be achieved by adjusting sample flow rate, sampling time, and/or dilution ratio, accordingly, so that the criterion for the effective weighting factors is met. The sampling time per mode must be at least 4 seconds per 0.01 weighting factor. Sampling must be conducted as late as possible within each mode. Particulate sampling shall be completed no earlier than 5 seconds before the end of each mode.

(e) The test must be conducted with all emission-related engine control variables in the highest brake-specific NO_X emissions state which could be encountered for a 30 second or longer averaging period at the given test point and for the conditions under which the engine is being tested.

(f) Manufacturers must follow the exhaust emissions sample analysis procedures under § 86.1340, and the calculation formulas and procedures under § 86.1342, for the 13-mode cycle and the 3 EPA-selected test points as applicable for steady-state testing, including the NO_X correction factor for humidity.

(g) Calculate the weighted average emissions as follows:

(1) For each regulated gaseous pollutant, calculate the weighted average emissions using the following equation:

$$A_{WA} = 1 - \frac{\sum_{i=1}^{N}\left[A_{Mi} \cdot WF_i\right]}{\sum_{i=2}^{N}\left[A_{Pi} - WF_i\right]}$$

Where:

A_{WA} = Weighted average emissions for each regulated gaseous pollutant, in grams per brake horse-power hour.

A_M = Modal average mass emissions level, in grams per hour. Mass emissions must be calculated as described in § 86.1342.

A_P = Modal average power, in brake horse-power. Any power measured during the idle mode (mode 1) is not included in this calculation.

W_F = Weighting factor corresponding to each mode of the steady-state test cycle, as defined in paragraph (a) of this section.

i = The modes of the steady-state test cycle defined in paragraph (a) of this section.

n = 13, corresponding to the 13 modes of the steady-state test cycle defined in paragraph (a) of this section.

(2) For PM measurements, a single filter must be used to measure PM over the 13 modes. The brake-specific PM emission level for the test must be calculated as described for a transient hot start test in § 86.1343. Only the power measured during the sampling period shall be used in the calculation.

(h) The test fuel used for supplemental steady-state testing under this section must meet the requirements of § 86.1313.

(i) Ambient conditions, charge cooling specifications, and intake and exhaust restrictions for supplemental steady-state testing and maximum allowable emission limit testing under this section must meet the requirements of § 86.1330.

■ 46. Section 86.1370–2007 is amended by revising paragraph (a) to read as follows:

§ 86.1370–2007 Not-To-Exceed test procedures.

(a) *General.* The purpose of this test procedure is to measure in-use emissions of heavy-duty diesel engines while operating within a broad range of speed and load points (the Not-To-Exceed Control Area) and under conditions which can reasonably be expected to be encountered in normal vehicle operation and use. Emission results from this test procedure are to be compared to the Not-To-Exceed Limits specified in § 86.007–11(a)(4), or to later Not-To-Exceed Limits. The Not-To-Exceed Limits do not apply for engine-starting conditions. Tests conducted using the procedures specified in § 86.1301 are considered valid Not-To-Exceed tests (**Note:** duty cycles and limits on ambient conditions do not apply for Not-To-Exceed tests).

■ 47. Section 86.1509–84 is amended by revising paragraphs (c) and (d) to read as follows:

§ 86.1509–84 Exhaust gas sampling system.

* * * * *

(c) A CVS sampling system with bag or continuous analysis as specified in 40 CFR part 1065 is permitted as applicable. The inclusion of an additional raw carbon dioxide (CO_2) analyzer as specified in 40 CFR part 1065 is required if the CVS system is used, in order to accurately determine the CVS dilution factor. The heated sample line specified in 40CFR part 1065 for raw emission requirements is not required for the raw (CO_2) measurement.

(d) A raw exhaust sampling system as specified in 40 CFR part 1065 is permitted.

■ 48. Section 86.1511–84 is amended by revising paragraphs (a)(1) and (b) to read as follows:

§ 86.1511–84 Exhaust gas analysis system.

(a) * * *

(1) The analyzer used shall conform to the accuracy provisions of 40 CFR part 1065, subparts C, D, and F.

* * * * *

(b) The inclusion of a raw CO_2 analyzer as specified in 40 CFR part 1065 is required in order to accurately determine the CVS dilution factor.

■ 49. Section 86.1513–90 is revised to read as follows:

§ 86.1513–90 Fuel specifications.

The requirements of this section are set forth in § 86.1313–94 for heavy-duty engines, and in § 86.113–90(a) for light-duty trucks.

■ 50. Section 86.1513–94 is revised to read as follows:

§ 86.1513–94 Fuel specifications.

The requirements of this section are set forth in 40 CFR part 1065, subpart H, for heavy-duty engines and in § 86.113–94 for light-duty trucks.

■ 51. Section 86.1514–84 is amended by revising paragraphs (b) and (c) to read as follows:

§ 86.1514–84 Analytical gases.

* * * * *

(b) If the raw CO sampling system specified in 40 CFR part 1065 is used, the analytical gases specified in 40 CFR part 1065, subpart H, shall be used.

(c) If a CVS sampling system is used, the analytical gases specified in 40 CFR part 1065, subpart H, shall be used.

■ 52. Section 86.1519–84 is revised to read as follows:

§ 86.1519–84 CVS calibration.

If the CVS system is used for sampling during the idle emission test, the calibration instructions are specified in 40 CFR part 1065, subpart D, for heavy-duty engines, and § 86.119–78 for light-duty trucks.

■ 53. Section 86.1524–84 is revised to read as follows:

§ 86.1524–84 Carbon dioxide analyzer calibration.

(a) The calibration requirements for the dilute-sample CO_2 analyzer are specified in 40 CFR part 1065, subpart D, for heavy-duty engines and § 86.124–78 for light-duty trucks.

(b) The calibration requirements for the raw CO_2 analyzer are specified in 40 CFR part 1065, subpart D.

■ 54. Section 86.1530–84 is amended by revising paragraph (b) to read as follows:

§ 86.1530–84 Test sequence; general requirements.

* * * * *

(b) Ambient test cell conditions during the test shall be those specified in § 86.130–78 or 40 CFR part 1065, subpart F.

■ 55. Section 86.1537–84 is amended by revising paragraphs (c), (e)(6), and (f) to read as follows:

§ 86.1537–84 Idle test run.

* * * * *

(c) Achieve normal engine operating condition. The transient engine or chassis dynamometer test is an acceptable technique for warm-up to normal operating condition for the idle test. If the emission test is not performed prior to the idle emission test, a heavy-duty engine may be warmed up according to 40 CFR part 1065, subpart F. A light-duty truck may be warmed up by operation through one Urban Dynamometer Driving Schedule test procedure (see § 86.115–78 and appendix I to this part).

* * * * *

(e) * * *

(6) For bag sampling, sample idle emissions long enough to obtain a sufficient bag sample, but in no case shorter than 60 seconds nor longer than 6 minutes. Follow the sampling and exhaust measurements requirements of 40 CFR part 1065, subpart F, for conducting the raw CO_2 measurement.

* * * * *

(f) If the raw exhaust sampling and analysis technique specified in 40 CFR part 1065 is used, the following procedures apply:

(1) Warm up the engine or vehicle per paragraphs (c) and (d) of this section. Operate the engine or vehicle at the conditions specified in paragraph (e)(4) of this section.

(2) Follow the sampling and exhaust measurement requirements of 40 CFR part 1065, subpart F. The idle sample shall be taken for 60 seconds minimum, and no more than 64 seconds. The chart reading procedures of 40 CFR part 1065, subpart F, shall be used to determine the analyzer response.

* * * * *

■ 56. Section 86.1540–84 is amended by revising paragraphs (b) and (c) to read as follows:

§ 86.1540–84 Idle exhaust sample analysis.

* * * * *

(b) If the CVS sampling system is used, the analysis procedures for dilute CO and CO_2 specified in 40 CFR part 1065 apply. Follow the raw CO_2 analysis procedure specified in 40 CFR part 1065, subpart F, for the raw CO_2 analyzer.

(c) If the continuous raw exhaust sampling technique specified in 40 CFR part 1065 is used, the analysis procedures for CO specified in 40 CFR part 1065, subpart F, apply.

■ 57. Section 86.1542–84 is amended by revising paragraph (a) introductory text to read as follows:

§ 86.1542–84 Information required.

(a) *General data—heavy-duty engines.* Information shall be recorded for each idle emission test as specified in 40 CFR part 1065, subpart G. The following test data are required:

* * * * *

■ 58. Section 86.1544–84 is amended by revising paragraphs (b)(1), (b)(2), and (c) to read as follows:

§ 86.1544–84 Calculation; idle exhaust emissions.

* * * * *

(b) * * *

(1) Use the procedures, as applicable, in 40 CFR 1065.650 to determine the dilute wet-basis CO and CO_2 in percent.

(2) Use the procedure, as applicable, in 40 CFR 1065.650 to determine the raw dry-basis CO_2 in percent.

* * * * *

(c) If the raw exhaust sampling and analysis system specified in 40 CFR part 1065 is used, the percent for carbon monoxide on a dry basis shall be calculated using the procedure, as applicable, in 40 CFR 1065.650.

* * * * *

■ 59. Section 86.1708–99 is amended by revising Tables R99–5 and R99–6 to read as follows:

§ 86.1708–99 Exhaust emission standards for 1999 and later light-duty vehicles.

* * * * *

(c) * * *

(2) * * *

TABLE R99–5.—INTERMEDIATE USEFUL LIFE (50,000 MILE) IN-USE STANDARDS (G/MI) FOR LIGHT-DUTY VEHICLES

Vehicle emission category	Model year	NMOG	CO	NO_X	HCHO
LEV	1999	0.100	3.4	0.3	0.015
ULEV	1999–2002	0.055	2.1	0.3	0.008

TABLE R99–6.—FULL USEFUL LIFE (100,000 MILE) IN-USE STANDARDS (G/MI) FOR LIGHT-DUTY VEHICLES

Vehicle emission category	Model year	NMOG	CO	NO_X	HCHO
LEV	1999	0.125	4.2	0.4	0.018
ULEV	1999–2002	0.075	3.4	0.4	0.011

* * * * *

■ 60. Section 86.1709–99 is amended by revising paragraph (c)(1) introductory text and by revising Table R99–14.2, to read as follows:

§ 86.1709–99 Exhaust emission standards for 1999 and later light light-duty trucks.

* * * * *

(c) * * *

(1) 1999 model year light light-duty trucks certified as LEVs and 1999 through 2002 model year light light-duty trucks certified as ULEVs shall meet the applicable intermediate and full useful life in-use standards in paragraph (c)(2) of this section, according to the following provisions:

* * * * *

(e) * * *

(2) * * *

TABLE R99–14.2.—SFTP EXHAUST EMISSION STANDARDS (G/MI) FOR LEVS AND ULEVS

	US06 Test		A/C Test	
Loaded vehicle weight (lbs)	MNHC + NO_X	CO	NMHC + NO_X	CO
0–3750	0.14	8.0	0.20	2.7
3751–5750	0.25	10.5	0.27	3.5

* * * * *

■ 61. Section 86.1710–99 is amended by revising paragraph (c)(8) introductory text to read as follows:

§ 86.1710–99 Fleet average non-methane organic gas exhaust emission standards for light-duty vehicles and light light-duty trucks.

* * * * *

(c) * * *

(8) Manufacturers may earn and bank credits in the NTR for model years 1997 and 1998. In states without a Section 177 Program effective in model year 1997 or 1998, such credits will be calculated as set forth in paragraphs (a) and (b) of this section, except that the applicable fleet average NMOG standard shall be 0.25 g/mi NMOG for the averaging set for light light-duty trucks from 0–3750 lbs LVW and light-duty vehicles or 0.32 g/mi NMOG for the averaging set for light light-duty trucks from 3751–5750 lbs LVW. In states that opt into National LEV and have a Section 177Program effective in model year 1997 or 1998, such credits will equal the unused credits earned in those states.

* * * * *

■ 62. Section 86.1711–99 is amended by revising the section heading and paragraph (a) to read as follows:

§ 86.1711–99 Limitations on sale of Tier 1 vehicles and TLEVs.

(a) In the 2001 and subsequent model years, manufacturers may sell Tier 1 vehicles and TLEVs in the NTR only if vehicles with the same engine families are certified and offered for sale in California in the same model year, except as provided under § 86.1707(d)(4).

* * * * *

■ 63. Section 86.1807–07 is amended by revising paragraph (h) to read as follows:

§ 86.1807–07 Vehicle labeling.

* * * * *

(h) Vehicles powered by model year 2007 and later diesel-fueled engines and other diesel vehicles certified using a test fuel with 15 ppm sulfur or less, must include permanent readily visible labels on the dashboard (or instrument panel) and near all fuel inlets that state ''Use Ultra Low Sulfur Diesel Fuel Only'' or ''Ultra Low Sulfur Diesel Fuel Only''.

■ 64. Section 86.1808–01 is amended by revising paragraph (f)(19)(iii) to read as follows:

§ 86.1808–01 Maintenance instructions.

* * * * *

(f) * * *

(19) * * *

(iii) Any person who violates a provision of this paragraph (f) shall be subject to a civil penalty of not more than $32,500 per day for each violation. This maximum penalty is shown for calendar year 2004. Maximum penalty limits for later years may be set higher based on the Consumer Price Index, as specified in 40 CFR part 19. In addition, such person shall be liable for all other remedies set forth in Title II of the Clean Air Act, remedies pertaining to provisions of Title II of the Clean Air Act, or other applicable provisions of law.

■ 65. Section 86.1808–07 is amended by revising paragraph (g) to read as follows:

§ 86.1808–07 Maintenance instructions.

* * * * *

(g) For each new diesel-fueled Tier 2 vehicle (certified using a test fuel with 15 ppm sulfur or less), the manufacturer shall furnish or cause to be furnished to the purchaser a statement that ''This vehicle must be operated only with ultra low sulfur diesel fuel (that is, diesel fuel meeting EPA specifications for highway diesel fuel, including a 15 ppm sulfur cap).''.

■ 66. Section 86.1811–04 is amended by revising Table S04–2 in paragraph (c)(6) to read as follows:

§ 86.1811–04 Emission standards for light-duty vehicles, light-duty trucks and medium-duty passenger vehicles.

* * * * *

(c) * * *

(6) * * *

TABLE S04–2.—TIER 2 AND INTERIM NON-TIER 2 INTERMEDIATE USEFUL LIFE (50,000 MILE) EXHAUST MASS EMISSION STANDARDS (GRAMS PER MILE)

Bin No.	NO_X	NMOG	CO	HCHO	PM	Notes
11	0.6	0.195	5.0	0.022		a c f h
10	0.4	0.125/0.160	3.4/4.4	0.015/0.018		a b d f g h
9	0.2	0.075/0.140	3.4	0.015		a b e f g h
8	0.14	0.100/0.125	3.4	0.015		b f h i
7	0.11	0.075	3.4	0.015		f h
6	0.08	0.075	3.4	0.015		f h
5	0.05	0.075	3.4	0.015		f h

Notes:

[a] This bin deleted at end of 2006 model year (end of 2008 model year for HLDTs and MDPVs).
[b] Higher NMOG, CO and HCHO values apply for HLDTs and MDPVs only.
[c] This bin is only for MDPVs.
[d] Optional NMOG standard of 0.195 g/mi applies for qualifying LDT4s and qualifying MDPVs only.
[e] Optional NMOG standard of 0.100 g/mi applies for qualifying LDT2s only.
[f] The full useful life PM standards from Table S04–1 also apply at intermediate useful life.
[g] Intermediate life standards of this bin are optional for diesels.
[h] Intermediate life standards are optional for vehicles certified to a useful life of 150,000 miles.
[i] Higher NMOG standard deleted at end of 2008 model year.

* * * * *

■ 67. Section 86.1816–08 is amended by revising paragraph (j)(2) to read as follows:

§ 86.1816–08 Emission standards for complete heavy-duty vehicles.

* * * * *

(j) * * *

(2) The in-use adjustments are:

(i) 0.1 g/mi for NO_X.

(ii) 0.100 g/mi NMHC.

(iii) 0.01 g/mi for PM.

■ 68. Section 86.1834–01 is amended by revising paragraph (b)(4) introductory text,(b)(6)(ii) introductory text, and (b)(6)(ii)(D) to read as follows:

§ 86.1834–01 Allowable maintenance.

* * * * *

(b) * * *

(4) For diesel-cycle light-duty vehicles and light-duty trucks, emission-related maintenance in addition to, or at shorter intervals than the following will not be accepted as technologically necessary, except as provided in paragraph (b)(7) of this section:

* * * * *

(6) * * *

(ii) All critical emission-related scheduled maintenance must have a reasonable likelihood of being performed in use. The manufacturer shall be required to show the reasonable likelihood of such maintenance being performed in use, and such showing shall be made prior to the performance of the maintenance on the durability data vehicle. Critical emission-related scheduled maintenance items which satisfy one of the following conditions will be accepted as having a reasonable likelihood of the maintenance item being performed in use:

* * * * *

(D) A manufacturer may desire to demonstrate through a survey that a critical maintenance item is likely to be performed without a visible signal on a maintenance item for which there is no prior in-use experience without the signal. To that end, the manufacturer may in a given model year market up to 200 randomly selected vehicles per critical emission-related maintenance item without such visible signals, and monitor the performance of the critical maintenance item by the owners to show compliance with paragraph(b)(6)(ii)(B) of this section. This option is restricted to two consecutive model years and may not be repeated until any previous survey has been completed.

If the critical maintenance involves more than one test group, the sample will be sales weighted to ensure that it is representative of all the groups in question.

* * * * *

■ 69. In Appendix I to Part 86, paragraph (a) is amended by revising the table entries for ''961'' and ''1345'', paragraph (b) is amended by revising the table entries for ''363,'' ''405,'' ''453,'' ''491,'' ''577,'' ''662,'' ''663,'' ''664,'' and ''932'', and paragraph (h) is amended by adding table entries for ''595,'' ''596,'' ''597,'' ''598,'' ''599,'' and ''600'' in numerical order to read as follows:

Appendix I to Part 86—Urban Dynamometer Schedules

(a) EPA Urban Dynamometer Driving Schedule for Light-Duty Vehicles and Light-Duty Trucks.

EPA URBAN DYNAMOMETER DRIVING SCHEDULE

[Speed versus Time Sequence]

Time (sec.)	Speed (m.p.h.)
* * * * *	
961	5.3
* * * * *	
1345	18.3
* * * * *	

(b) EPA Urban Dynamometer Driving Schedule for Light-Duty Vehicles, Light-Duty Trucks, and Motorcycles with engine displacements equal to or greater than 170 cc (10.4 cu. in.).

SPEED VERSUS TIME SEQUENCE

Time (seconds)	Speed (kilometers per hour)
* * * * *	
363	52.8
* * * * *	
405	14.8
* * * * *	
453	31.9
* * * * *	
491	55.5
* * * * *	
577	27.4
* * * * *	
662	42.0
663	42.2
664	42.2
* * * * *	
932	40.2
* * * * *	

* * * * *

(h) EPA SC03 Driving Schedule for Light-Duty Vehicles and Light-Duty Trucks.

EPA SC03 DRIVING SCHEDULE

[Speed versus Time Sequence]

Time (sec)	Speed (mph)
* * * * *	
595	0.0
596	0.0
597	0.0
598	0.0
599	0.0
600	0.0

PART 89—CONTROL OF EMISSIONS FROM NEW AND IN-USE NONROAD COMPRESSION-IGNITION ENGINES

■ 70. The authority citation for part 89 is revised to read as follows:

Authority: 42 U.S.C. 7401–7671q.

■ 71. Section 89.1 is amended by revising paragraph (b)(4)(ii) and adding paragraph (c) to read as follows:

§ 89.1 Applicability.

* * * * *

(b) * * *

(4) * * *

(ii) Are exempted from the requirements of 40 CFR part 94 by exemption provisions of 40 CFR part 94 other than those specified in 40 CFR 94.907 or 94.912.

* * * * *

(c) In certain cases, the regulations in this part 89 apply to engines at or above 250 kW that would otherwise be covered by 40 CFR part 1048. See 40 CFR 1048.620 for provisions related to this allowance.

■ 72. Section 89.2 is amended by removing the definitions for ''Marine diesel engine'' and ''Vessel'', revising the definition of ''United States'', and adding definitions for ''Amphibious vehicle'', ''Marine engine'', and ''Marine vessel'' to read as follows:

§ 89.2 Definitions.

* * * * *

Amphibious vehicle means a vehicle with wheels or tracks that is designed primarily for operation on land and secondarily for operation in water.

* * * * *

Marine engine means a nonroad engine that is installed or intended to be installed on a marine vessel. This includes a portable auxiliary marine engine only if its fueling, cooling, or exhaust system is an integral part of the vessel. There are two kinds of marine engines:

(1) Propulsion marine engine means a marine engine that moves a vessel through the water or directs the vessel's movement.

(2) Auxiliary marine engine means a marine engine not used for propulsion.

Marine vessel has the meaning given in 1 U.S.C. 3, except that it does not include amphibious vehicles. The definition in 1 U.S.C. 3 very broadly includes every craft capable of being used as a means of transportation on water.

* * * * *

United States means the States, the District of Columbia, the Commonwealth of Puerto Rico, the Commonwealth of the Northern Mariana Islands, Guam, American Samoa, and the U.S. Virgin Islands.

* * * * *

■ 73. Section 89.102 is amended by revising paragraph (d)(1)(i) to read as follows:

§ 89.102 Effective dates, optional inclusion, flexibility for equipment manufacturers.

* * * * *

(d) * * *

(1) * * *

(i) Equipment rated at or above 37 kW. For nonroad equipment and vehicles with engines rated at or above 37 kW, a manufacturer may take any of the actions identified in § 89.1003(a)(1) for a portion of its U.S.-directed production volume of such equipment and vehicles during the seven years immediately following the date on which Tier 2 engine standards first apply to engines used in such equipment and vehicles, provided that the seven-year sum of these portions in each year, as expressed as a percentage for each year, does not exceed 80, and provided that all such equipment and vehicles or equipment contain Tier 1 or Tier 2 engines;

* * * * *

■ 74. Section 89.110 is amended by revising paragraph (b)(2) to read as follows:

§ 89.110 Emission control information label.

* * * * *

(b) * * *

(2) The full corporate name and trademark of the manufacturer; though the label may identify another company and use its trademark instead of the manufacturer's if the provisions of § 89.1009 are met.

* * * * *

■ 75. Section 89.112 is amended by revising paragraph (f)(3) to read as follows:

§ 89.112 Oxides of nitrogen, carbon monoxide, hydrocarbon, and particulate matter exhaust emission standards.

* * * * *

(f) * * *

(3) *Test procedures.* NO_X, NMHC, and PM emissions are measured using the procedures set forth in 40 CFR part 1065, in lieu of the procedures set forth in subpartE of this part. CO emissions may be measured using the procedures set forth either in 40 CFR part 1065 or in subpart E of this part. Manufacturers may use an alternate procedure to demonstrate the desired level of emission control if approved in advance by the Administrator. Engines meeting the requirements to qualify as Blue Sky

Series engines must be capable of maintaining a comparable level of emission control when tested using the procedures set forth in paragraph (c) of this section and subpart E of this part. The numerical emission levels measured using the procedures from subpartE of this part may be up to 20 percent higher than those measured using the procedures from 40 CFR part 1065 and still be considered comparable.

* * * * *

■ 76. Section 89.114 is amended by revising paragraph (b)(3) and adding paragraph (b)(4) to read as follows:

§ 89.114 Special and alternate test procedures.

* * * * *

(b) * * *

(3) A manufacturer may elect to use the test procedures in 40 CFR part 1065 as an alternate test procedure without advance approval by the Administrator. The manufacturer must identify in its application for certification that the engines were tested using the procedures in 40 CFR part 1065. For any EPA testing with Tier 2 orTier 3 engines, EPA will use the manufacturer's selected procedures for mapping engines, generating duty cycles, and applying cycle-validation criteria. For any other parameters, EPA may conduct testing using either of the specified procedures.

(4) Where we specify mandatory compliance with the procedures of 40 CFR part 1065, such as in § 89.419, manufacturers may elect to use the procedures specified in 40 CFR part 86, subpart N, as an alternate test procedure without advance approval by the Administrator.

■ 77. Section 89.130 is revised to read as follows:

§ 89.130 Rebuild practices.

The provisions of 40 CFR 1068.120 apply to rebuilding of engines subject to the requirements of this part 89, except Tier 1 engines rated at or above 37 kW.

■ 78. Section 89.301 is amended by revising paragraph (d) to read as follows:

§ 89.301 Scope; applicability.

* * * * *

(d) Additional information about system design, calibration methodologies, and so forth, for raw gas sampling can be found in 40 CFR part 1065. Examples for system design, calibration methodologies, and so forth, for dilute exhaust gas sampling can be found in 40 CFR part 1065.

■ 79. Section 89.319 is amended by revising paragraphs (b)(2)(ii) and (c) introductory text to read as follows:

§ 89.319 Hydrocarbon analyzer calibration.

(b) * * *

(2) * * *

(ii) The HFID optimization procedures outlined in 40 CFR part 1065, subpart D.

* * * * *

(c) *Initial and periodic calibration.* Prior to introduction into service, after any maintenance which could alter calibration, and monthly thereafter, the FID or HFID hydrocarbon analyzer shall be calibrated on all normally used instrument ranges using the steps in this paragraph (c). Use the same flow rate and pressures as when analyzing samples. Calibration gases shall be introduced directly at the analyzer, unless the ''overflow'' calibration option of 40 CFR part 1065, subpart F, for the HFID is taken. New calibration curves need not be generated each month if the existing curve can be verified as continuing to meet the requirements of paragraph (c)(3) of this section.

* * * * *

■ 80. Section 89.320 is amended by revising paragraph (d) to read as follows:

§ 89.320 Carbon monoxide analyzer calibration.

* * * * *

(d) The initial and periodic interference, system check, and calibration test procedures specified in 40 CFR part 1065 may be used in lieu of the procedures specified in this section.

■ 81. Section 89.321 is amended by revising paragraph (d) to read as follows:

§ 89.321 Oxides of nitrogen analyzer calibration.

* * * * *

(d) The initial and periodic interference, system check, and calibration test procedures specified in 40 CFR part 1065 may be used in lieu of the procedures specified in this section.

■ 82. Section 89.322 is amended by revising paragraph (b) to read as follows:

§ 89.322 Carbon dioxide analyzer calibration.

* * * * *

(b) The initial and periodic interference, system check, and calibration test procedures specified in 40 CFR part 1065 may be used in lieu of the procedures in this section.

■ 83. Section 89.410 is amended by adding paragraph (e) to read as follows:

§ 89.410 Engine test cycle.

* * * * *

(e) Manufacturers may optionally use the ramped-modal duty cycles corresponding to the discrete-mode duty cycles specified in this section, as described in 40 CFR 1039.505.

■ 84. Section 89.419 is amended by revising paragraphs (a) introductory text, (a)(3)(i),(b)(1) introductory text, (b)(2)(i), (b)(2)(v)(B), (b)(4)(ii), and (b)(4)(iii) to read as follows:

§ 89.419 Dilute gaseous exhaust sampling and analytical system description.

(a) *General.* The exhaust gas sampling system described in this section is designed to measure the true mass of gaseous emissions in the exhaust of petroleum-fueled nonroad compression-ignition engines. This system utilizes the CVS concept (described in 40CFR part 1065, subparts A and B) of measuring mass emissions of HC, CO, and CO_2. A continuously integrated system is required for HC and NO_X measurement and is allowed for all CO and CO_2 measurements. The mass of gaseous emissions is determined from the sample concentration and total flow over the test period. As an option, the measurement of total fuel mass consumed over a cycle may be substituted for the exhaust measurement of CO_2. General requirements are as follows:

* * * * *

(3) * * *

(i) Bag sampling (see 40 CFR part 1065) and analytical capabilities (see 40 CFR part 1065), as shown in Figure 2 and Figure 3 in appendix A to this subpart; or

* * * * *

(b) * * *

(1) *Exhaust dilution system.* The PDP–CVS shall conform to all of the requirements listed for the exhaust gas PDP–CVS in 40 CFR part 1065. The CFV–CVS shall conform to all the requirements listed for the exhaust gas CFV–CVS in 40 CFR part 1065. In addition, the CVS must conform to the following requirements:

* * * * *

(2) * * *

(i) The continuous HC sample system (as shown in Figure 2 or 3 in appendix A to this subpart) uses an ''overflow'' zero and span system. In this type of system, excess zero or span gas spills out of the probe when zero and span checks of the analyzer are made. The ''overflow'' system may also be used to calibrate the HC analyzer according to 40 CFR part 1065, subpart F, although this is not required.

* * * * *

(v) * * *

(B) Have a wall temperature of 191 °C ±11 °C over its entire length. The temperature of the system shall be demonstrated by profiling the thermal characteristics of the system where possible at initial installation and after

any major maintenance performed on the system. The profiling shall be accomplished using the insertion thermocouple probing technique. The system temperature will be monitored continuously during testing at the locations and temperature described in 40 CFR 1065.145.

* * * * *

(4) * * *

(ii) The continuous NO_X, CO, or CO_2 sampling and analysis system shall conform to the specifications of 40 CFR 1065.145 with the following exceptions and revisions:

(A) The system components required to be heated by 40 CFR 1065.145 need only be heated to prevent water condensation, the minimum component temperature shall be 55 °C.

(B) The system response shall meet the specifications in 40 CFR part 1065, subpart C.

(C) Alternative NO_X measurement techniques outlined in 40 CFR part 1065, subpart D, are not permitted for NO_X measurement in this subpart.

(D) All analytical gases must conform to the specifications of § 89.312.

(E) Any range on a linear analyzer below 155 ppm must have and use a calibration curve conforming to § 89.310.

(iii) The chart deflections or voltage output of analyzers with non-linear calibration curves shall be converted to concentration values by the calibration curve(s) specified in § 89.313 before flow correction (if used) and subsequent integration takes place.

■ 85. Section 89.421 is amended by revising paragraphs (b) and (c) to read as follows:

§ 89.421 Exhaust gas analytical system; CVS bag sample.

* * * * *

(b) *Major component description.* The analytical system, Figure 4 in appendix A to this subpart, consists of a flame ionization detector (FID) (heated for petroleum-fueled compression-ignition engines to 191 °C ±6 °C) for the measurement of hydrocarbons, nondispersive infrared analyzers (NDIR) for the measurement of carbon monoxide and carbon dioxide, and a chemiluminescence detector (CLD) (or HCLD) for the measurement of oxides of nitrogen. The exhaust gas analytical system shall conform to the following requirements:

(1) The CLD (or HCLD) requires that the nitrogen dioxide present in the sample be converted to nitric oxide before analysis. Other types of analyzers may be used if shown to yield equivalent results and if approved in advance by the Administrator.

(2) If CO instruments are used which are essentially free of CO_2 and water vapor interference, the use of the conditioning column may be deleted. (See 40 CFR part 1065, subpart D.)

(3) A CO instrument will be considered to be essentially free of CO_2 and water vapor interference if its response to a mixture of 3 percent CO_2 in N2, which has been bubbled through water at room temperature, produces an equivalent CO response, as measured on the most sensitive CO range, which is less than 1 percent of full scaleCO concentration on ranges above 300 ppm full scale or less than 3 ppm on ranges below 300 ppm full scale. (See 40 CFR part 1065, subpart D.)

(c) *Alternate analytical systems.* Alternate analysis systems meeting the specifications of 40 CFR part 1065, subpart A, may be used for the testing required under this subpart. Heated analyzers may be used in their heated configuration.

* * * * *

■ 86. Section 89.424 is amended by revising the note at the end of paragraph (d)(3) to read as follows:

§ 89.424 Dilute emission sampling calculations.

* * * * *

(d) * * *

(3) * * *

(Note: If a CO instrument that meets the criteria specified in 40 CFR part 1065, subpart C, is used without a sample dryer according to 40 CFR 1065.145, CO_{em} must be substituted directly for CO_e and CO_{dm} must be substituted directly for CO_d.)

* * * * *

■ 87. Appendix A to Subpart F is amended by revising Table 1 to read as follows:

Appendix A to Subpart F of Part 89—Sampling Plans for Selective Enforcement Auditing of Nonroad Engines

TABLE 1.—SAMPLING PLAN CODE LETTER

Annual engine family sales	Code letter
20–50	AA [1]
20–99	A
100–299	B
300–499	C
500 or greater	D

[1] A manufacturer may optionally use either the sampling plan for code letter "AA" or sampling plan for code letter "A" for Selective Enforcement Audits of engine families with annual sales between 20 and 50 engines. Additionally, the manufacturer may switch between these plans during the audit.

* * * * *

■ 88. Section 89.603 is amended by adding paragraph (e) to read as follows:

§ 89.603 General requirements for importation of nonconforming nonroad engines.

* * * * *

(e)(1) The applicable emission standards for engines imported by an ICI under this subpart are the emission standards applicable to the Original Production (OP) year of the engine.

(2) Where engine manufacturers have choices in emission standards for one or more pollutants in a given model year, the standard that applies to the ICI is the least stringent standard for that pollutant applicable to the OP year for the appropriate power category.

(3) ICIs may not generate, use or trade emission credits or otherwise participate in any way in the averaging, banking and trading program.

(4) An ICI may import no more than a total of five engines under this part for any given model year, except as allowed by paragraph (e)(5) of this section. For ICIs owned by a parent company, the importation limit includes importation by the parent company and all its subsidiaries.

(5) An ICI may exceed the limit outlined in paragraph (e)(4) of this section, provided that any engines in excess of the limit meet the emission standards and other requirements outlined in the applicable provisions of Part 89 or 1039 of this chapter for the model year in which the engine is modified (instead of the emission standards and other requirements applicable for the OP year of the vehicle/engine).

■ 89. Section 89.611 is amended by revising paragraph (b)(1) to read as follows:

§ 89.611 Exemptions and exclusions.

* * * * *

(b) * * *

(1) *Exemption for repairs or alterations.* A person may conditionally import under bond a nonconforming engine solely for purpose of repairs or alterations. The engine may not be operated in the United States other than for the sole purpose of repair or alteration or shipment to the point of repair or alteration and to the port of export. It may not be sold or leased in the United States and is to be exported upon completion of the repairs or alterations.

* * * * *

■ 90. Section 89.612 is amended by revising paragraph (d) to read as follows:

§ 89.612 Prohibited acts; penalties.

* * * * *

(d) An importer who violates section 213(d) and section 203 of the Act is subject to the provisions of section 209 of the Act and is also subject to a civil penalty under section 205 of the Act of not more than $32,500 for each nonroad engine subject to the violation.

In addition to the penalty provided in the Act, where applicable, a person or entity who imports an engine under the exemption provisions of § 89.611(b) and, who fails to deliver the nonroad engine to the U.S. Customs Service is liable for liquidated damages in the amount of the bond required by applicable Customs laws and regulations. The maximum penalty value listed in this paragraph (d) is shown for calendar year 2004. Maximum penalty limits for later years may be adjusted based on the Consumer Price Index. The specific regulatory provisions for changing the maximum penalties, published in 40 CFR part 19, reference the applicable U.S. Code citation on which the prohibited action is based.

* * * * *

■ 91. A new § 89.614 is added to subpart G to read as follows:

§ 89.614 Importation of partially complete engines.

The provisions of 40 CFR 1068.330 apply for importation of partially complete engines, or engines that will be modified for applications other than those covered by this part 89.

■ 92. A new § 89.913 is added to subpart J to read as follows:

§ 89.913 What provisions apply to engines certified under the motor-vehicle program?

You may use the provisions of 40 CFR 1039.605 to introduce new nonroad engines into commerce if they are already certified to the requirements that apply to compression-ignition engines under 40 CFR parts 85 and 86. However, when using the provisions of 40 CFR 1039.605, references to this part 89 or sections in this part shall be used instead of references to 40 CFR part 1039 or sections in that part.

■ 93. A new § 89.914 is added to subpart J to read as follows:

§ 89.914 What provisions apply to vehicles certified under the motor-vehicle program?

You may use the provisions of 40 CFR 1039.610 to introduce new nonroad engines or equipment into commerce if the vehicle is already certified to the requirements that apply under 40 CFR parts 85 and 86. However, when using the provisions of 40 CFR 1039.610, references to this part 89 or sections in this part shall be used instead of references to 40 CFR part 1039 or sections in that part.

■ 94. A new § 89.915 is added to subpart J to read as follows:

§ 89.915 Staged-assembly exemption.

You may ask us to provide a temporary exemption to allow you to complete production of your engines at different facilities, as long as you maintain control of the engines until they are in their certified configuration. We may require you to take specific steps to ensure that such engines are in their certified configuration before reaching the ultimate purchaser. You may request an exemption under this section in your application for certification, or in a separate submission.

■ 95. Section 89.1003 is amended by removing and reserving paragraphs (b)(5) and (b)(6), redesignating (b)(7)(iv) as (b)(7)(vii), revising paragraphs (a)(3)(iii), (b)(7)(ii), and(b)(7)(iii), and adding paragraphs (b)(7)(iv) and (b)(7)(viii) to read as follows:

§ 89.1003 Prohibited acts.

(a) * * *

(3) * * *

(iii) For a person to deviate from the provisions of § 89.130 when rebuilding an engine (or rebuilding a portion of an engine or engine system). Such a deviation violates paragraph (a)(3)(i) of this section.

* * * * *

(b) * * *

(7) * * *

(ii) The engine manufacturer or its agent takes ownership and possession of the engine being replaced or confirms that the engine has been destroyed; and

(iii) If the engine being replaced was not certified to any emission standards under this part, the replacement engine must have a permanent label with your corporate name and trademark and the following language, or similar alternate language approved by the Administrator: THIS ENGINE DOES NOT COMPLY WITH FEDERAL NONROAD OR ON-HIGHWAY EMISSION REQUIREMENTS. SALE OR INSTALLATION OF THIS ENGINE FOR ANY PURPOSE OTHER THAN AS A REPLACEMENT ENGINE FOR AN ENGINE MANUFACTURED PRIOR TO JANUARY 1 [INSERT APPROPRIATE YEAR] IS A VIOLATION OF FEDERAL LAW SUBJECT TO CIVIL PENALTY.

(iv) If the engine being replaced was certified to emission standards less stringent than those in effect when you produce the replacement engine, the replacement engine must have a permanent label with your corporate name and trademark and the following language, or similar alternate language approved by the Administrator: THIS ENGINE COMPLIES WITH U.S. EPA NONROAD EMISSIONREQUIREMENTS FOR [Insert appropriate year reflecting when the Tier 1 or Tier 2 standards for the replaced engine began to apply] ENGINES UNDER 40 CFR 89.1003(b)(7). SELLING OR INSTALLING THIS ENGINE FOR ANY PURPOSE OTHER THAN TO REPLACE A NONROAD ENGINE BUILT BEFORE JANUARY 1, [Insert appropriate year reflecting when the next tier of emission standards began to apply] MAY BE A VIOLATION OF FEDERAL LAW SUBJECT TO CIVIL PENALTY.

* * * * *

(viii) The provisions of this section may not be used to circumvent emission standards that apply to new engines under this part.

■ 96. Section 89.1006 is amended by revising paragraphs (a)(1), (a)(2), (a)(5), and (c)(1) and adding paragraph (a)(6) to read as follows:

§ 89.1006 Penalties.

(a) * * *

(1) A person who violates § 89.1003(a)(1), (a)(4), or (a)(6), or a manufacturer or dealer who violates § 89.1003(a)(3)(i), is subject to a civil penalty of not more than $32,500 for each violation.

(2) A person other than a manufacturer or dealer who violates § 89.1003(a)(3)(i) or any person who violates § 89.1003(a)(3)(ii) is subject to a civil penalty of not more than $2,750 for each violation.

* * * * *

(5) A person who violates § 89.1003(a)(2) or (a)(5) is subject to a civil penalty of not more than $32,500 per day of violation.

(6) The maximum penalty values listed in this section are shown for calendar year 2004. Maximum penalty limits for later years may be adjusted based on the Consumer Price Index. The specific regulatory provisions for changing the maximum penalties, published in 40 CFR part 19, reference the applicable U.S. Code citation on which the prohibited action is based.

* * * * *

(c) * * *

(1) Administrative penalty authority. In lieu of commencing a civil action under paragraph (b) of this section, the Administrator may assess any civil penalty prescribed in paragraph (a) of this section, except that the maximum amount of penalty sought against each violator in a penalty assessment proceeding shall not exceed $270,000, unless the Administrator and the Attorney General jointly determine that a matter involving a larger penalty

amount is appropriate for administrative penalty assessment. Any such determination by the Administrator and the Attorney General is not subject to judicial review. Assessment of a civil penalty shall be by an order made on the record after opportunity for a hearing held in accordance with the procedures found at part 22 of this chapter. The Administrator may compromise, or remit, with or without conditions, any administrative penalty which may be imposed under this section.

* * * * *

■ 97. A new § 89.1009 is added to subpart K to read as follows:

§ 89.1009 What special provisions apply to branded engines?

A manufacturer identifying the name and trademark of another company on the emission control information label, as provided by § 89.110(b)(2), must comply with the provisions of 40 CFR 1039.640.

PART 90—CONTROL OF EMISSIONS FROM NONROAD SPARK-IGNITION ENGINES AT OR BELOW 19 KILOWATTS

■ 98. The authority citation for part 90 is revised to read as follows:

Authority: 42 U.S.C. 7401—7671q.

■ 99. Section 90.1 is amended by revising paragraphs (b) and (d)(5) and adding text to paragraph (c) to read as follows:

§ 90.1 Applicability.

* * * * *

(b) In certain cases, the regulations in this part 90 also apply to new engines with a gross power output above 19 kW that would otherwise be covered by 40 CFR part 1048 or 1051. See 40 CFR 1048.615 or 1051.145(a)(3) for provisions related to this allowance.

(c) In certain cases, the regulations in this part 90 apply to new engines below 50 cc used in motorcycles that are motor vehicles. See 40 CFR 86.447–2006 for provisions related to this allowance.

(d) * * *

(5) Engines certified to meet the requirements of 40 CFR part 1048, subject to the provisions of § 90.913.

* * * * *

■ 100. Section 90.3 is amended by revising the definitions for *Marine engine, Marine vessel,* and *United States* and adding definitions for *Amphibious vehicle, Good engineering judgment,* and *Maximum engine power* in alphabetical order to read as follows:

§ 90.3 Definitions.

* * * * *

Amphibious vehicle means a vehicle with wheels or tracks that is designed primarily for operation on land and secondarily for operation in water.

* * * * *

Good engineering judgment has the meaning given in 40 CFR 1068.30. See 40 CFR 1068.5 for the administrative process we use to evaluate good engineering judgment.

* * * * *

Marine engine means a nonroad engine that is installed or intended to be installed on a marine vessel. This includes a portable auxiliary marine engine only if its fueling, cooling, or exhaust system is an integral part of the vessel. There are two kinds of marine engines:

(1) Propulsion marine engine means a marine engine that moves a vessel through the water or directs the vessel's movement.

(2) Auxiliary marine engine means a marine engine not used for propulsion.

Marine vessel has the meaning given in 1 U.S.C. 3, except that it does not include amphibious vehicles. The definition in 1 U.S.C. 3 very broadly includes every craft capable of being used as a means of transportation on water.

Maximum engine power means the maximum value of gross power at rated speed.

* * * * *

United States means the States, the District of Columbia, the Commonwealth of Puerto Rico, the Commonwealth of the Northern Mariana Islands, Guam, American Samoa, and the U.S. Virgin Islands.

* * * * *

■ 101. Section 90.119 is amended by revising paragraph (a)(1)(i) to read as follows:

§ 90.119 Certification procedure—testing.

(a) * * *

(1) * * *

(i) Class I and II engines must use the test cycle that is appropriate for their application. Engines that operate only at intermediate speed must use Test Cycle A, which is described in Table 2 of Appendix A to subpart E of this part. Engines that operate only at rated speed must use Test Cycle B, which is described in Table 2 of Appendix A to subpart E of this part. If an engine family includes engines used in both rated-speed and intermediate-speed applications, the manufacturer must select the duty cycle that will result in worst-case emission results for certification. For any testing after certification, the engine must be tested using the most appropriate test cycle based on the engine's installed governor.

* * * * *

■ 102. Section 90.120 is amended by adding and reserving paragraph (b)(3) and adding paragraph (b)(4) to read as follows:

§ 90.120 Certification procedure—use of special test procedures.

* * * * *

(b) * * *

(3) [Reserved]

(4) Where we specify mandatory compliance with the procedures of 40 CFR part 1065, manufacturers may elect to use the procedures specified in 40 CFR part 86, subpart N, as an alternate test procedure without advance approval by the Administrator.

* * * * *

■ 103. Section 90.301 is amended by revising paragraphs (c) and (d) to read as follows:

§ 90.301 Applicability.

* * * * *

(c) Additional information about system design, calibration methodologies, and so forth, for raw gas sampling can be found in 40 CFR part 1065. Examples for system design, calibration methodologies, and so forth, for dilute exhaust gas sampling can be found in 40 CFR part 1065.

(d) For Phase 2 Class I, Phase 2 Class I–B, and Phase 2 Class II natural gas fueled engines, use the procedures of 40 CFR part 1065 to measure nonmethane hydrocarbon (NMHC) exhaust emissions from Phase 2 Class I, Phase 2 Class I–B, and Phase 2 Class II natural gas fueled engines.

■ 104. Section 90.308 is amended by revising paragraph (b)(1) to read as follows:

§ 90.308 Lubricating oil and test fuels.

* * * * *

(b) * * *

(1) The manufacturer must use gasoline having the specifications, or substantially equivalent specifications approved by the Administrator, as specified in Table 3 in Appendix A of this subpart for exhaust emission testing of gasoline fueled engines. As an option, manufacturers may use the fuel specified in 40 CFR part 1065, subpart H, for gasoline-fueled engines.

* * * * *

■ 105. Section 90.316 is amended by revising paragraphs (b)(2)(ii) and (c) introductory text to read as follows:

§ 90.316 Hydrocarbon analyzer calibration.

* * * * *

(b) * * *

(2) * * *

(ii) The HFID optimization procedures outlined in 40 CFR part 1065, subpart D.

* * * * *

(c) *Initial and periodic calibration.* Prior to initial use and monthly thereafter, or within one month prior to the certification test, the FID or HFID hydrocarbon analyzer must be calibrated on all normally used instrument ranges using the steps in this paragraph. Use the same flow rate and pressures as when analyzing samples. Introduce calibration gases directly at the analyzer. An optional method for dilute sampling described in 40 CFR part 1065, subpart F, may be used.

* * * * *

■ 106. Section 90.318 is amended by revising paragraph (d) to read as follows:

§ 90.318 Oxides of nitrogen analyzer calibration.

* * * * *

(d) The initial and periodic interference, system check, and calibration test procedures specified in 40 CFR part 1065, subpart D, may be used in lieu of the procedures specified in this section.

■ 107. Section 90.320 is amended by revising paragraph (b) to read as follows:

§ 90.320 Carbon dioxide analyzer calibration.

* * * * *

(b) The initial and periodic interference, system check, and calibration test procedures specified in 40 CFR part 1065, subparts C and D, may be used in lieu of the procedures in this section.

■ 108. Section 90.324 is amended by revising paragraphs (a)(3) and (b) to read as follows:

§ 90.324 Analyzer leakage check.

(a) * * *

(3) The sample probe and the connection between the sample probe and valve V2, see Figure 1 in Appendix B of subpart E of this part, may be excluded from the leak check.

(b) *Pressure-side leak check.* Substantial leaks of the sample on the pressure side of the system may impact sample integrity if the leaks are of sufficient magnitude. As a safety precaution, good engineering practice would require that manufacturers perform periodic pressure-side leak checks of the sampling system. The recommended maximum leakage rate on the pressure side is five percent of the in-use flow rate.

■ 109. Section 90.326 is amended by revising the introductory text, and paragraphs (a) and (e)(4) to read as follows:

§ 90.326 Pre- and post-test analyzer calibration.

Calibrate only the range of each analyzer used during the engine exhaust emission test prior to and after each test in accordance with the following:

(a) Make the calibration by using a zero gas and a span gas. The span gas value must be between 75 and 100 percent of the highest range used.

* * * * *

(e) * * *

(4) If the response of the zero gas or span gas differs more than one percent of full scale at the highest range used, then repeat paragraphs (e)(1) through (3) of this section.

■ 110. Section 90.401 is amended by revising paragraph (d) to read as follows:

§ 90.401 Applicability.

* * * * *

(d) For Phase 2 Class I, Phase 2 Class I–B, and Phase 2 Class II natural gas fueled engines, use the equipment specified in 40 CFR part 1065, subparts D and E, to measure nonmethane hydrocarbon (NMHC) exhaust emissions from Phase 2 Class I, Phase 2 Class I–B, and Phase 2 Class II natural gas fueled engines.

■ 111. Section 90.405 is amended by removing paragraph (d)(10).

■ 112. Section 90.408 is amended by revising paragraph (b)(2) to read as follows:

§ 90.408 Pre-test procedures.

* * * * *

(b) * * *

(2) An evaluation of the effects of test measurement systems on engine emissions shall be conducted using good engineering judgment to ensure that such test systems do not significantly impact exhaust emissions from the engine. For example, this would require evaluation of all types of emission sampling systems, and of fuel- and air-flow measurement systems for raw sampling. This can be accomplished by operating the engine at the highest engine torque value that will be encountered on the test cycle before and after such test systems are installed to ensure that the impact on measured torque is less than 5 percent. This may also be accomplished by measuring air-to-fuel ratio using a zirconia universal exhaust gas oxygen (UEGO) sensor to ensure that the impact on measured air-to-fuel ratio is less than 5 percent at the highest engine torque value that will be encountered on the test cycle before and after such test systems are installed. The impact of air- and fuel-flow measurement systems may be evaluated based on an engineering analysis of the impact of the change in pressure induced on air-intake pressure and fuel supply pressure by these measurement systems. While this would typically be done before testing, it may also be done as a post-test verification.

* * * * *

■ 113. Section 90.409 is amended by revising paragraph (c)(6) to read as follows:

§ 90.409 Engine dynamometer test run.

* * * * *

(c) * * *

(6) If, during the emission measurement portion of a mode, the value of the gauges downstream of the NDIR analyzer(s) G3 or G4 (see Figure 1 in Appendix B of this subpart), differs by more than ±0.5kPa from the pretest value, the test mode is void.

■ 114. Section 90.417 is revised to read as follows:

§ 90.417 Fuel flow measurement specifications.

(a) Fuel flow measurement is required only for raw testing. Fuel flow is allowed for dilute testing.

(b) The fuel flow measurement instrument must have a minimum accuracy of one percent of full-scale flow rate for each measurement range used. An exception is allowed for the idle mode. For this mode, the minimum accuracy is ± five percent of full-scale flow rate for the measurement range used. The controlling parameters are the elapsed time measurement of the event and the weight or volume measurement. You may apply the accuracy specifications of 40 CFR part 1065, subpart C, instead of those in this paragraph(b).

■ 115. Section 90.418 is revised to read as follows:

§ 90.418 Data evaluation for gaseous emissions.

For the evaluation of the gaseous emissions recording, record the last two minutes of each mode and determine the average values for HC, CO, CO_2 and NO_X during each mode from the average concentration readings determined from the corresponding calibration data. Longer averaging times are acceptable, but the reported sampling period must be a continuous set of data.

■ 116. Section 90.419 is amended by removing paragraph (e) and revising the equations for K_H and H in paragraphs (b) and (c) to read as follows:

§ 90.419 Raw emission sampling calculations—gasoline fueled engines.

* * * * *

(b) * * *

K_H = Factor for correcting the effects of humidity on NO_2 formation for 4-

stroke gasoline small engines, as follows:

$K_H = (9.953 \times H + 0.832)$

Where:

H = the amount of water in an ideal gas; 40 CFR 1065.645 describes how to determine this value (referred to as x_{H_2O}).

K_H = 1 for two-stroke gasoline engines.

(c) * * *

K_H = Factor for correcting the effects of humidity on NO_2 formation for 4-stroke gasoline small engines, as follows:

$K_H = (9.953 \times H + 0.832)$

Where:

H = the amount of water in an ideal gas; 40 CFR 1065.645 describes how to determine this value (referred to as x_{H_2O}).

K_H = 1 for two-stroke gasoline engines.

* * * * *

■ 117. Section 90.421 is amended by revising paragraph (b) introductory text and (b)(4)(ii) introductory text to read as follows:

§ 90.421 Dilute gaseous exhaust sampling and analytical system description.

* * * * *

(b) *Component description.* The components necessary for exhaust sampling must meet the following requirements:

* * * * *

(4) * * *

(ii) Conform to the continuous NO_X, CO, or CO_2 sampling and analysis system to the specifications of 40 CFR 1065.145, with the following exceptions and revisions:

* * * * *

■ 118. Section 90.426 is amended by removing and reserving paragraphs (f) and (g) and revising paragraph (e) to read as follows:

§ 90.426 Dilute emission sampling calculations—gasoline fueled engines.

* * * * *

(e) The humidity correction factor K_H is an adjustment made to measured NO_X values. This corrects for the sensitivity that a spark-ignition engine has to the humidity of its combustion air. The following formula is used to determine K_H for NO_X calculations:

$K_H = (9.953\ H + 0.832)$

Where:

H = the amount of water in an ideal gas; 40 CFR 1065.645 describes how to determine this value (referred to as x_{H_2O}).

K_H = 1 for two-stroke gasoline engines.

(f) [Reserved]

(g) [Reserved]

* * * * *

■ 119. Section 90.612 is amended by revising paragraph (b)(1) to read as follows:

§ 90.612 Exemptions and exclusions.

* * * * *

(b) * * *

(1) *Exemption for repairs or alterations.* A person may conditionally import under bond a nonconforming engine solely for purpose of repairs or alterations. The engine may not be operated in the United States other than for the sole purpose of repair or alteration or shipment to the point of repair or alteration and to the port of export. It may not be sold or leased in the United States and is to be exported upon completion of the repairs or alterations.

* * * * *

■ 120. Section 90.613 is amended by revising paragraph (d) to read as follows:

§ 90.613 Prohibited acts; penalties.

* * * * *

(d) An importer who violates section 213(d) and section 203 of the Act is subject to a civil penalty under section 205 of the Act of not more than $32,500 for each engine subject to the violation. In addition to the penalty provided in the Act, where applicable, under the exemption provisions of § 90.612(b), a person or entity who fails to deliver the engine to the U.S. Customs Service is liable for liquidated damages in the amount of the bond required by applicable Customs laws and regulations. The maximum penalty value listed in this paragraph (d) is shown for calendar year 2004. Maximum penalty limits for later years may be adjusted based on the Consumer Price Index. The specific regulatory provisions for changing the maximum penalties, published in 40 CFR part 19, reference the applicable U.S. Code citation on which the prohibited action is based.

■ 121. A new § 90.615 is added to subpart G to read as follows:

§ 90.615 Importation of partially complete engines.

The provisions of 40 CFR 1068.330 apply for importation of partially complete engines, or engines that will be modified for applications other than those covered by this part 90.

■ 122. Section 90.706 is amended by revising the equation for N in paragraph (b)(1) to read as follows:

§ 90.706 Engine sample selection.

* * * * *

(b) * * *

$$N = \left[\frac{(t_{95} \times \sigma)}{(x - FEL)}\right]^2 + 1$$

* * * * *

■ 123. A new § 90.913 is added to subpart J to read as follows:

§ 90.913 Exemption for engines certified to standards for large SI engines.

(a) An engine is exempt from the requirements of this part if it is in an engine family that has a valid certificate of conformity showing that it meets emission standards and other requirements under 40 CFR part 1048 for the appropriate model year.

(b) The only requirements or prohibitions from this part that apply to an engine that is exempt under this section are in this section.

(c) If your engines do not have the certificate required in paragraph (a) of this section, they will be subject to the provisions of this part. Introducing these engines into commerce without a valid exemption or certificate of conformity violates the prohibitions in § 90.1003.

(d) Engines exempted under this section are subject to all the requirements affecting engines under 40 CFR part 1048. The requirements and restrictions of 40 CFR part 1048 apply to anyone manufacturing these engines, anyone manufacturing equipment that uses these engines, and all other persons in the same manner as if these were nonroad spark-ignition engines above 19 kW.

(e) Engines exempted under this section may not generate or use emission credits under this part 90.

■ 124. Section 90.1006 is amended by revising paragraphs (a)(1), (a)(2), (a)(5), and (c)(1) and adding paragraph (a)(6) to read as follows:

§ 90.1006 Penalties.

(a) * * *

(1) A person who violates § 90.1003(a)(1), (a)(4), or (a)(5), or a manufacturer or dealer who violates § 90.1003(a)(3)(i), is subject to a civil penalty of not more than $32,500 for each violation.

(2) A person other than a manufacturer or dealer who violates § 90.1003(a)(3)(i) or any person who violates § 90.1003(a)(3)(ii) is subject to a civil penalty of not more than $2,750 for each violation.

* * * * *

(5) A person who violates § 90.1003(a)(2) or (a)(6) is subject to a civil penalty of not more than $32,500 per day of violation.

(6) The maximum penalty values listed in this section are shown for

calendar year 2004. Maximum penalty limits for later years may be adjusted based on the Consumer Price Index. The specific regulatory provisions for changing the maximum penalties, published in 40 CFR part 19, reference the applicable U.S. Code citation on which the prohibited action is based.

* * * * *

(c) * * *

(1) Administrative penalty authority. In lieu of commencing a civil action under paragraph (b) of this section, the Administrator shall assess any civil penalty prescribed in paragraph (a) of this section, except that the maximum amount of penalty sought against each violator in a penalty assessment proceeding can not exceed $270,000, unless the Administrator and the Attorney General jointly determine that a matter involving a larger penalty amount is appropriate for administrative penalty assessment. Any such determination by the Administrator and the Attorney General is not subject to judicial review. Assessment of a civil penalty is made by an order made on the record after opportunity for a hearing held in accordance with the procedures found at part 22 of this chapter. The Administrator may compromise, or remit, with or without conditions, any administrative penalty which may be imposed under this section.

* * * * *

PART 91—CONTROL OF EMISSIONS FROM MARINE SPARK-IGNITION ENGINES

■ 125. The authority citation for part 91 is revised to read as follows:

Authority: 42 U.S.C. 7401—7671q.

■ 126. Section 91.3 is amended by revising the definitions for ''Marine spark-ignition engine'', ''Marine vessel'', and ''United States'', adding definitions for ''Amphibious vehicle'', ''Marine engine'', and ''Spark-ignition'' in alphabetical order to read as follows:

§ 91.3 Definitions.

* * * * *

Amphibious vehicle means a vehicle with wheels or tracks that is designed primarily for operation on land and secondarily for operation in water.

* * * * *

Marine engine means a nonroad engine that is installed or intended to be installed on a marine vessel. This includes a portable auxiliary marine engine only if its fueling, cooling, or exhaust system is an integral part of the vessel. There are two kinds of marine engines:

(1) Propulsion marine engine means a marine engine that moves a vessel through the water or directs the vessel's movement.

(2) Auxiliary marine engine means a marine engine not used for propulsion.

* * * * *

Marine spark-ignition engine means a spark-ignition marine engine that propels a marine vessel.

Marine vessel has the meaning given in 1 U.S.C. 3, except that it does not include amphibious vehicles. The definition in 1 U.S.C. 3 very broadly includes every craft capable of being used as a means of transportation on water.

* * * * *

Spark-ignition means relating to a gasoline-fueled engine or any other type of engine with a spark plug (or other sparking device) and with operating characteristics significantly similar to the theoretical Otto combustion cycle. Spark-ignition engines usually use a throttle to regulate intake air flow to control power during normal operation.

* * * * *

United States means the States, the District of Columbia, the Commonwealth of Puerto Rico, the Commonwealth of the Northern Mariana Islands, Guam, American Samoa, and the U.S. Virgin Islands.

* * * * *

■ 127. Section 91.119 is amended by adding and reserving paragraph (b)(3) and adding paragraph (b)(4) to read as follows:

§ 91.119 Certification procedure—use of special test procedures.

* * * * *

(b) * * *

(3) [Reserved]

(4) Where we specify mandatory compliance with the procedures of 40 CFR part 1065, manufacturers may elect to use the procedures specified in 40 CFR part 86, subpart N, as an alternate test procedure without advance approval by the Administrator.

■ 128. Section 91.207 is amended by revising the second equation for S(t) in paragraph (a) to read as follows:

§ 91.207 Credit calculation and manufacturer compliance with emission standards.

(a) * * *

$$S(t) = \exp -(0.906 \times t/\mu_{life})^4$$

* * * * *

■ 129. Section 91.301 is amended by revising paragraph (c) to read as follows:

§ 91.301 Scope; applicability.

* * * * *

(c) Additional information about system design, calibration methodologies, and so forth, for raw gas sampling can be found in 40 CFR part 1065. Examples for system design, calibration methodologies, and so forth, for dilute sampling can be found in 40 CFR part 1065.

■ 130. Section 91.316 is amended by revising paragraphs (b)(2)(ii) and (c) introductory text, and the first equation in paragraph (d)(6) to read as follows:

§ 91.316 Hydrocarbon analyzer calibration.

* * * * *

(b) * * *

(2) * * *

(ii) The HFID optimization procedures outlined in 40 CFR part 1065, subpart D.

* * * * *

(c) Initial and periodic calibration. Prior to introduction into service and monthly thereafter, or within one month prior to the certification test, calibrate the FID or HFID hydrocarbon analyzer on all normally used instrument ranges, using the steps in this paragraph. Use the same flow rate and pressures as when analyzing samples. Introduce calibration gases directly at the analyzer. An optional method for dilute sampling described in 40 CFR part 1065, subpart F, may be used.

* * * * *

(d) * * *

(6) * * *

$$\text{percent } O_2 \text{ I} = (B - \text{Analyzer response (ppm C)})/B \times 100$$

* * * * *

■ 131. Section 91.318 is amended by revising paragraph (d) and the equation in paragraph (b)(11) to read as follows:

§ 91.318 Oxides of nitrogen analyzer calibration.

* * * * *

(b) * * *

(11) * * *

$$\text{percent efficiency} = (1 + (a - b)/(c - d)) \times 100$$

* * * * *

(d) The initial and periodic interference, system check, and calibration test procedures specified in 40 CFR part 1065, subparts C and D, may be used in lieu of the procedures specified in this section.

■ 132. Section 91.320 is amended by revising paragraph (b) to read as follows:

§ 91.320 Carbon dioxide analyzer calibration.

* * * * *

(b) The initial and periodic interference, system check, and calibration test procedures specified in 40 CFR part 1065, subparts C and D, may be used in lieu of the procedures in this section.

■ 133. Section 91.325 is amended by revising the equations in paragraphs

(c)(1)(iv) and (c)(2)(iii) and adding paragraph (c)(2)(iv) to read as follows:

§ 91.325 Analyzer interference checks.

* * * * *

(c) * * *

(1) * * *

(iv) * * *

percent CO_2 quench =100 − 100 × [c × a/(d × a − d × b)] × a/b

* * * * *

(2) * * *

(iii) * * *

D1 = D × (1 − Z1/100)

(iv)(A) The maximum raw or dilute exhaust water vapor concentration expected during testing (designated as Wm) can be estimated from the CO_2 span gas (or as defined in the equation in this paragraph and designated as A) criteria in paragraph (c)(1) of this section and the assumption of a fuel atom H/C ratio of 1.8:1 as:

Wm(%) = 0.9 × A(%)

Where:

A = maximum CO_2 concentration expected in the sample system during testing.

(B) Percent water quench shall not exceed 3 percent and shall be calculated by:

% Water Quench = 100 × (D1 − AR)/D1 × Wm/Z1

■ 134. Section 91.419 is amended by revising the entry defining ''M_{HCexh}'' in paragraph (b) to read as follows:

§ 91.419 Raw emission sampling calculations.

* * * * *

(b) * * *

M_{HCexh} = Molecular weight of hydrocarbons in the exhaust; see the following equation:

$M_{HCexh} = 12.01 + 1.008 \times \alpha$

* * * * *

■ 135. Section 91.421 is amended by revising paragraph (b)(4)(ii) and (b)(4)(iii) to read as follows:

§ 91.421 Dilute gaseous exhaust sampling and analytical system description.

* * * * *

(b) * * *

(4) * * *

(ii) Conform to the continuous NO_X, CO, or CO_2 sampling and analysis system to the specifications of 40 CFR 1065.145, with the following exceptions and revisions:

(A) Heat the system components requiring heating only to prevent water condensation, the minimum component temperature is 55 °C.

(B) Coordinate analysis system response time with CVS flow fluctuations and sampling time/test cycle offsets to meet the time-alignment and dispersion specifications in 40 CFR pat 1065, subpart C.

(C) Use only analytical gases conforming to the specifications of 40 CFR 1065.750 for calibration, zero, and span checks.

(D) Use a calibration curve conforming to 40 CFR part 1065, subparts C and D, for CO, CO_2, and NO_X for any range on a linear analyzer below 155 ppm.

(iii) Convert the chart deflections or voltage output of analyzers with non-linear calibration curves to concentration values by the calibration curve(s) specified in 40 CFR part 1065, subpart D, before flow correction (if used) and subsequent integration takes place.

■ 136. Section 91.705 is amended by revising paragraph (d) to read as follows:

§ 91.705 Prohibited acts; penalties.

* * * * *

(d) An importer who violates § 91.1103(a)(1), section 213(d) and section 203 of the Act is subject to a civil penalty under § 91.1106 and section 205 of the Act of not more than$32,500 for each marine engine subject to the violation. In addition to the penalty provided in the Act, where applicable, a person or entity who imports an engine under the exemption provisions of § 91.704(b) and, who fails to deliver the marine engine to the U.S. Customs Service by the end of the period of conditional admission is liable for liquidated damages in the amount of the bond required by applicable Customs laws and regulations. The maximum penalty value listed in this paragraph (d) is shown for calendar year 2004. Maximum penalty limits for later years may be adjusted based on the Consumer Price Index. The specific regulatory provisions for changing the maximum penalties, published in 40 CFR part 19, reference the applicable U.S. Code citation on which the prohibited action is based.

■ 137. A new § 91.707 is added to read as follows:

§ 91.707 Importation of partially complete engines.

The provisions of 40 CFR 1068.330 apply for importation of partially complete engines.

■ 138. Section 91.1106 is amended by revising paragraphs (a)(1), (a)(2), (a)(5), and (c)(1) and adding paragraph (a)(6) to read as follows:

§ 91.1106 Penalties.

(a) * * *

(1) A person who violates § 91.1103 (a)(1), (a)(4), or (a)(5), or a manufacturer or dealer who violates § 91.1103(a)(3)(i), is subject to a civil penalty of not more than $32,500 for each violation.

(2) A person other than a manufacturer or dealer who violates § 91.1103(a)(3)(i) or any person who violates § 91.1103(a)(3)(ii) is subject to a civil penalty of not more than $2,750 for each violation.

* * * * *

(5) A person who violates § 91.1103 (a)(2) or (a)(6) is subject to a civil penalty of not more than $32,500 per day of violation.

(6) The maximum penalty values listed in this section are shown for calendar year 2004. Maximum penalty limits for later years may be adjusted based on the Consumer Price Index. The specific regulatory provisions for changing the maximum penalties, published in 40 CFR part 19, reference the applicable U.S. Code citation on which the prohibited action is based.

* * * * *

(c) * * *

(1) Administrative penalty authority. In lieu of commencing a civil action under paragraph (b) of this section, the Administrator shall assess any civil penalty prescribed in paragraph (a) of this section, except that the maximum amount of penalty sought against each violator in a penalty assessment proceeding can not exceed $270,000, unless the Administrator and the Attorney General jointly determine that a matter involving a larger penalty amount is appropriate for administrative penalty assessment. Any such determination by the Administrator and the Attorney General is not subject to judicial review. Assessment of a civil penalty is made by an order made on the record after opportunity for a hearing held in accordance with the procedures found at part 22 of this chapter. The Administrator may compromise, or remit, with or without conditions, any administrative penalty which may be imposed under this section.

* * * * *

PART 92—CONTROL OF AIR POLLUTION FROM LOCOMOTIVES AND LOCOMOTIVE ENGINES

■ 139. The authority citation for part 92 is revised to read as follows:

Authority: 42 U.S.C. 7401–7671q.

■ 140. Section 92.1 is amended by revising paragraphs (a) introductory text, (b)(3), and (b)(4) and adding paragraph (d) to read as follows:

§ 92.1 Applicability.

(a) Except as noted in paragraphs (b) and (d) of this section, the provisions of this part apply to manufacturers, remanufacturers, owners and operators of:

* * * * *

(b) * * *

(3) Locomotive engines which provide only hotel power (see 40 CFR parts 89 and 1039 to determine if such engines are subject to EPA emission requirements); or

(4) Nonroad vehicles excluded from the definition of locomotive in § 92.2, and the engines used in such nonroad vehicles (see 40 CFR parts 86, 89, and 1039 to determine if such vehicles or engines are subject to EPA emission requirements).

* * * * *

(d) The provisions of subpart L of this part apply to all persons.

■ 141. Section 92.2 is amended in paragraph (b) by revising the definitions for ''Calibration'', ''Locomotive'', paragraph (5) of the definition for ''New locomotive or new locomotive engine'', ''Repower'', and ''United States'' to read as follows:

§ 92.2 Definitions.

* * * * *

(b) * * *

Calibration means the set of specifications, including tolerances, specific to a particular design, version, or application of a component, or components, or assembly capable of functionally describing its operation over its working range. This definition does apply to Subpart B of this part.

* * * * *

Locomotive means a self-propelled piece of on-track equipment designed for moving or propelling cars that are designed to carry freight, passengers or other equipment, but which itself is not designed or intended to carry freight, passengers (other than those operating the locomotive) or other equipment. The following other equipment are not locomotives (see 40 CFR parts 86 and 89 for this equipment):

(1) Equipment which is designed for operation both on highways and rails are not locomotives.

(2) Specialized railroad equipment for maintenance, construction, post accident recovery of equipment, and repairs; and other similar equipment, are not locomotives.

(3) Vehicles propelled by engines with total rated horsepower of less than 750 kW (1006 hp) are not locomotives (see 40 CFR parts 86 and 89 for this equipment), unless the owner (including manufacturers) chooses to have the equipment certified under the requirements of this part. Where equipment is certified as a locomotive pursuant to this paragraph (3), it shall be subject to the requirements of this part for the remainder of its service life. For locomotives propelled by two or more engines, the total rated horsepower is the sum of the rated horsepowers of each engine.

* * * * *

New locomotive or *new locomotive engine* means: * * *

(5) Notwithstanding paragraphs (1) through (3) of this definition, locomotives and locomotive engines which are owned by a small railroad and which have never been manufactured or remanufactured into a certified configuration are not new.

* * * * *

Repower means replacement of the engine in a previously used locomotive with a freshly manufactured locomotive engine. Replacing a locomotive engine with a freshly manufactured locomotive engine in a locomotive that has a refurbished or reconditioned chassis such that less than 25 percent of the parts of the locomotive were previously used(as weighted by dollar value) is not repowering.

* * * * *

United States means the States, the District of Columbia, the Commonwealth of Puerto Rico, the Commonwealth of the Northern Mariana Islands, Guam, American Samoa, and the U.S. Virgin Islands.

* * * * *

■ 142. Section 92.8 is amended by revising paragraph (b) to read as follows:

§ 92.8 Emission standards.

* * * * *

(b) No crankcase emissions shall be discharged directly into the ambient atmosphere from any new locomotive or new locomotive engine, except as allowed by paragraph (1) of this paragraph (b).

(1) Discharge of crankcase emissions into the engine exhaust complies with this prohibition, provided crankcase emissions are measured and included with exhaust emissions. Other discharge of crankcase emissions complies with this prohibition, provided crankcase emissions are measured in all certification, production-line, and in-use tests and the masses are added mathematically to the exhaust emissions.

(2) Compliance with this standard is required throughout the entire service life of the locomotive or locomotive engine.

* * * * *

■ 143. Section 92.12 is amended by adding paragraphs (g) and (h) to read as follows:

§ 92.12 Interim provisions.

* * * * *

(g) *Tier 0 locomotive labels.* Remanufacturers may use identical labels for locomotives and engines for Tier 0 locomotives, provided the remanufacturer demonstrates to EPA that they will supply two labels (one for the locomotive and one for the engine) only with those remanufacturing systems being applied to locomotives that have not been previously labeled (i.e., locomotives that have not been previously certified). For other locomotives, the remanufacturer may only supply one label.

(h) *Labels for calendar year 2005.* During calendar year 2005, manufacturers and remanufacturers may comply with the labeling requirements that were applicable during calendar year 2004, instead of the labeling requirements specified in § 92.212(c)(2)(v).

■ 144. Section 92.104 is amended by revising paragraph (b)(1)(i) to read as follows:

§ 92.104 Locomotive and engine testing; overview.

* * * * *

(b) * * *

(1) * * *

(i) Engine speed setpoints for each mode shall be within 2 percent of the speed of the engine when it is operated in the locomotive. Engine load setpoints for each mode shall be within 2 percent (or 3.0 horsepower, whichever is greater) of the load of the engine when it is operated in the locomotive.

* * * * *

■ 145. Section 92.105 is amended by revising paragraph (d) to read as follows:

§ 92.105 General equipment specifications.

* * * * *

(d) *Electrical measurements.* Instruments used to measure engine power output shall comply with the requirements of § 92.106.

* * * * *

■ 146. Section 92.106 is amended by revising paragraph (b)(1)(ii) to read as follows:

§ 92.106 Equipment for loading the engine.

* * * * *

(b) * * *

(1) * * *

(ii) Engine flywheel torque readout shall be accurate to within ±2 percent of the NIST ''true'' value torque at all power settings above 10 percent of full-

scale, and accurate to within ±5 percent of the NIST ''true'' value torque at power settings at or below 10 percent of full-scale.

■ 147. Section 92.109 is amended by revising paragraph (c)(3) to read as follows:

§ 92.109 Analyzer specifications.

* * * * *

(c) * * *

(3) *Alcohols and Aldehydes.* The sampling and analysis procedures for alcohols and aldehydes, where applicable, shall be approved by the Administrator prior to the start of testing. Procedures are allowed if they are consistent with the general requirements of 40 CFR part 1065, subpart I, for sampling and analysis of alcohols and aldehydes, and with good engineering practice.

* * * * *

■ 148. Section 92.114 is amended by revising paragraphs (a)(2)(ii), (d)(2) introductory text and (e)(1) to read as follows:

§ 92.114 Exhaust gas and particulate sampling and analytical system.

* * * * *

(a) * * *

(2) * * *

(ii) For locomotive testing where the locomotive has multiple exhaust stacks, proportional samples may be collected from each exhaust outlet instead of ducting the exhaust stacks together, provided that the CO_2 concentrations in each exhaust stream are shown (either prior to testing or during testing) to be within 5 percent of each other at notch 8.

* * * * *

(d) * * *

(2) For engine testing, either a locomotive-type or a facility-type exhaust system (or a combination system) may be used. The exhaust backpressure for engine testing shall be set between 90 and 100 percent of the maximum backpressure that will result with the exhaust systems of the locomotives in which the engine will be used. Backpressure less than 90 percent of the maximum value is also allowed, provided the backpressure is within 0.07 psi of the maximum value. The facility-type exhaust system shall meet the following requirements:

* * * * *

(e) * * *

(1) Dilution of the exhaust prior to sampling is allowed for gaseous emissions. The equipment and methods used for dilution, sampling and analysis shall comply with the requirements of 40 CFR part 1065, with the following exceptions and additional requirements:

(i) Proportional sampling and heat exchangers are not required;

(ii) Larger minimum dimensions for the dilution tunnel(s) shall be specified by the Administrator;

(iii) Other modifications may be made with written approval from the Administrator.

* * * * *

■ 149. Section 92.123 is amended by revising paragraph (a)(2) to read as follows:

§ 92.123 Test procedure; general requirements.

(a) * * *

(2) For locomotives with multiple exhaust stacks, smoke testing is required for only one of the exhaust stacks provided the following conditions are met:

(i) The stack that is not tested is not visibly smokier than the stack that is tested, and

(ii) None of the measured opacity values for the stack tested are greater than three-quarters of the level allowed by any of the applicable smoke standards.

* * * * *

■ 150. Section 92.124 is amended by revising paragraph (f) to read as follows:

§ 92.124 Test sequence; general requirements.

* * * * *

(f) The required test sequence is described in Table B124–1 of this section, as follows:

TABLE B124–1

Test sequence for locomotives and locomotive engines

Mode No.	Notch setting	Time in notch	Emissions measured [2]	Power, and fuel consumption measured
Warmup	Notch 8	5 ± 1 min	None	None
Warmup	Lowest Idle	15 min maximum (after engine speed reaches lowest idle speed).	None	None
1a	Low Idle[1]	6 min minimum	All	Both
1	Normal Idle	6 min minimum	All	Both
2	Dynamic Brake[1]	6 min minimum	All	Both
3	Notch 1	6 min minimum	All	Both
4	Notch 2	6 min minimum	All	Both
5	Notch 3	6 min minimum	All	Both
6	Notch 4	6 min minimum	All	Both
7	Notch 5	6 min minimum	All	Both
8	Notch 6	6 min minimum	All	Both
9	Notch 7	6 min minimum	All	Both
10	Notch 8	15 min minimum	All	Both

[1] Omit if not so equipped.

[2] The EPA test sequence for locomotives and locomotive engines may be performed once, with gaseous, particulate and smoke measurements performed simultaneously, or it may be performed twice with gaseous, and particulate measurements performed during one test sequence and smoke measurements performed during the other test sequence. The minimum time in notch is three minutes for test sequences in which only smoke is measured.

■ 151. Section 92.126 is amended by revising paragraph (b)(3) to read as follows:

§ 92.126 Test run.

* * * * *

(b) * * *

(3) Fuel flow rate shall be measured continuously. The value reported for the fuel flow rate shall be a one-minute average of the instantaneous fuel flow

measurements taken during the last minute of the minimum sampling period listed in Table B124–1 in § 92.124; except for testing during idle modes, where it shall be a three-minute average of the instantaneous fuel flow measurements taken during the last three minutes of the minimum sampling period listed in Table B124–1 in § 92.124. Sampling periods greater than one minute are allowed, consistent with good engineering practice. Fuel flow averaging periods should generally match the emission sampling periods as closely as is practicable.

* * * * *

■ 152. Section 92.131 is amended by revising paragraph (b)(3) to read as follows:

§ 92.131 Smoke, data analysis.

* * * * *

(b) * * *

(3) The ''steady-state'' value is either:

(i) The highest reading occurring more than two minutes after the notch change (excluding peaks lasting less than 5 seconds, caused by such random events as the cycling of an air compressor) if opacity measurements are recorded graphically; or

(ii) The average of the second by second values between 120 and 180 seconds after the notch change if opacity measurements are recorded digitally.

* * * * *

■ 153. Section 92.132 is amended by revising paragraphs (b)(3)(iii)(D)(*2*) and (d) to read as follows:

§ 92.132 Calculations.

* * * * *

(b) * * *

(3) * * *

(iii) * * *

(D) * * *

(*2*) If a CO instrument that meets the criteria specified in 40 CFR part 1065, subpart C, is used without a sample dryer according to 40 CFR 1065.145, CO_{em} must be substituted directly for CO_e and CO_{dm} must be substituted directly for CO_d.

* * * * *

(d) *NO_X correction factor.* (1) NO_X emission rates ($M_{NOx\ mode}$) shall be adjusted to account for the effects of humidity and temperature by multiplying each emission rate by K_{NOx}, which is calculated from the following equations:

$$K_{NOX} = (K)(1 + (0.25(\log K)^2)^{1/2})$$

$$K = (K_H)(K_T)$$

$$K_H = [C_1 + C_2\exp((-0.0143)(10.714))]/[C_1 + C_2\exp((-0.0143)(1000H))]$$

$$C_1 = -8.7 + 164.5\exp(-0.0218(A/F)_{wet})$$

$$C_2 = 130.7 + 3941\exp(-0.0248(A/F)_{wet})$$

Where:

$(A/F)_{wet}$ = Mass of moist air intake divided by mass of fuel intake.

$K_T = 1/[1 - 0.0107(T_{30} - T_A)]$ for tests conducted at ambient temperatures below 30 °C.

$K_T = 1.00$ for tests conducted at ambient temperatures at or above 30 °C.

T_{30} = The measured intake manifold air temperature in the locomotive when operated at 30 °C (or 100 °C, where intake manifold air temperature is not available).

T_A = The measured intake manifold air temperature in the locomotive as tested (or the ambient temperature (°C), where intake manifold air temperature is not available).

* * * * *

■ 154. Section 92.203 is amended by revising paragraph (d)(1)(i) to read as follows:

§ 92.203 Application for certification.

* * * * *

(d) *Required content.* Each application must include the following information:(1)(i) A description of the basic engine design including, but not limited to, the engine family specifications, the provisions of which are contained in § 92.204;

* * * * *

■ 155. Section 92.204 is amended by revising paragraph (a) to read as follows:

§ 92.204 Designation of engine families.

* * * * *

(a) Manufacturers and remanufacturers shall divide their locomotives and locomotive engines into groupings of locomotives and locomotive engines which are expected to have similar emission characteristics throughout their useful life. Each group shall be defined as a separate engine family. Freshly manufactured locomotives may not be included in the same engine family as remanufactured locomotives. Freshly manufactured engines may be included in the same engine family as remanufactured locomotives, provided such engines are used as replacement engines for locomotive models included in the engine family.

* * * * *

■ 156. Section 92.205 is amended by revising paragraph (a) introductory text to read as follows:

§ 92.205 Prohibited controls, adjustable parameters.

(a) Any system installed on, or incorporated in, a new locomotive or new locomotive engine to enable such locomotive or locomotive engine to conform to standards contained in this part:

* * * * *

■ 157. Section 92.208 is amended by revising paragraphs (a) and (b) to read as follows:

§ 92.208 Certification.

(a) Paragraph (a) of this section applies to manufacturers of new locomotives and new locomotive engines. If, after a review of the application for certification, test reports and data acquired from a freshly manufactured locomotive or locomotive engine or from a development data engine, and any other information required or obtained by EPA, the Administrator determines that the application is complete and that the engine family meets the requirements of the Act and this part, he/she will issue a certificate of conformity with respect to such engine family except as provided by paragraph (c)(3) of this section. The certificate of conformity is valid for each engine family from the date of issuance by EPA until 31 December of the model year or calendar year for which it is issued and upon such terms and conditions as the Administrator deems necessary or appropriate to assure that the production locomotives or engines covered by the certificate will meet the requirements of the Act and of this part.

(b) This paragraph (b) applies to remanufacturers of locomotives and locomotive engines. If, after a review of the application for certification, test reports and data acquired from a remanufactured locomotive or locomotive engine or from a development data engine, and any other information required or obtained by EPA, the Administrator determines that the engine family meets the requirements of the Act and of this subpart, he/she will issue a certificate of conformity with respect to such engine family except as provided by paragraph (c)(3) of this section. The certificate of conformity is valid for each engine family from the date of issuance by EPA until 31 December of the model year or calendar year for which it is issued and upon such terms and conditions as the Administrator deems necessary or appropriate to assure that the production locomotives or engines covered by the certificate will meet the requirements of the Act and of this part.

* * * * *

■ 158. Section 92.210 is amended by revising paragraphs (b)(1), (b)(2), (d)(2), and (d)(3) to read as follows:

§ 92.210 Amending the application and certificate of conformity.

* * * * *

(b) * * *

(1) A full description of the change to be made in production, or of the locomotives or engines to be added;

(2) Engineering evaluations or data showing that the locomotives or engines as modified or added will comply with all applicable emission standards; and

* * * * *

(d) * * *

(2) If the Administrator determines that the change or new locomotive(s) or engine(s) meets the requirements of this part and the Act, the appropriate certificate of conformity shall be amended.

(3) If the Administrator determines that the changed or new locomotive(s) or engine(s) does not meet the requirements of this part and the Act, the certificate of conformity will not be amended. The Administrator shall provide a written explanation to the manufacturer or remanufacturer of the decision not to amend the certificate. The manufacturer or remanufacturer may request a hearing on a denial.

* * * * *

■ 159. Section 92.212 is amended by revising paragraphs (b)(2)(ii), (b)(2)(v)(A), (b)(2)(v)(G), (c)(2)(v)(A), and(c)(2)(v)(D)(*2*) to read as follows:

§ 92.212 Labeling.

* * * * *

(b) * * *

(2) * * *

(ii) The label shall be attached to a locomotive chassis part necessary for normal operation and not normally requiring replacement during the service life of the locomotive. This label may not be attached to the engine.

* * * * *

(v) * * *

(A) The label heading: Original Locomotive Emission Control Information. Manufacturers and remanufacturers may add a subheading to distinguish this label from the engine label described in paragraph (c) of this section.

* * * * *

(G) The standards and/or FELs to which the locomotive was certified.

* * * * *

(c) * * *

(2) * * *

(v) * * *

(A) The label heading: Engine Emission Control Information. Manufacturers and remanufacturers may add a subheading to distinguish this label from the locomotive label described in paragraph (b) of this section.

* * * * *

(D) * * *

(*2*) This locomotive and locomotive engine conform to U.S. EPA regulations applicable to locomotives and locomotive engines originally manufactured on or after January 1, 2002 and before January 1, 2005; or

* * * * *

■ 160. Section 92.215 is amended by revising paragraphs (a)(2)(i)(A) and (b) to read as follows:

§ 92.215 Maintenance of records; submittal of information; right of entry.

(a) * * *

(2) * * *

(i) * * *

(A) In the case where a current production engine is modified for use as a certification engine or in a certification locomotive, a description of the process by which the engine was selected and of the modifications made. In the case where the certification locomotive or the engine for a certification locomotive is not derived from a current production engine, a general description of the buildup of the engine (*e.g.*, whether experimental heads were cast and machined according to supplied drawings). In the cases in the previous two sentences, a description of the origin and selection process for fuel system components, ignition system components, intake-air pressurization and cooling-system components, cylinders, pistons and piston rings, exhaust smoke control system components, and exhaust aftertreatment devices as applicable, shall be included. The required descriptions shall specify the steps taken to assure that the certification locomotive or certification locomotive engine, with respect to its engine, drivetrain, fuel system, emission-control system components, exhaust aftertreatment devices, exhaust smoke control system components or any other devices or components as applicable, that can reasonably be expected to influence exhaust emissions will be representative of production locomotives or locomotive engines and that either: All components and/or locomotive or engine, construction processes, component inspection and selection techniques, and assembly techniques employed in constructing such locomotives or engines are reasonably likely to be implemented for production locomotives or engines; or that they are as close as practicable to planned construction and assembly process.

* * * * *

(b) The manufacturer or remanufacturer of any locomotive or locomotive engine subject to any of the standards prescribed in this part shall submit to the Administrator, at the time of issuance by the manufacturer or remanufacturer, copies of all instructions orexplanations regarding the use, repair, adjustment, maintenance, or testing of such locomotive or engine, relevant to the control of crankcase, or exhaust emissions issued by the manufacturer or remanufacturer, for use by other manufacturers or remanufacturers, assembly plants, distributors, dealers, owners and operators. Any material not translated into the English language need not be submitted unless specifically requested by the Administrator.

* * * * *

■ 161. Section 92.216 is amended by removed by removing and reserving paragraph (a)(2).

§ 92.216 [Amended]

■ 162. Section 92.403 is amended by revising paragraph (b) to read as follows:

§ 92.403 Emission defect information report.

* * * * *

(b) Defect information reports required under paragraph (a) of this section must be submitted not more than 15 working days after the same emission-related defect is found to affect 10 or more locomotives or locomotive engines. Information required by paragraph (c) of this section that is either not available within 15 working days or is significantly revised must be submitted as it becomes available.

* * * * *

■ 163. Section 92.508 is amended by revising paragraph (e) introductory text to read as follows:

§ 92.508 Calculation and reporting of test results.

* * * * *

(e) Within 45 calendar days of the end of each quarter, each manufacturer or remanufacturer must submit to the Administrator a report which includes the following information:

* * * * *

■ 164. Section 92.511 is amended by revising paragraph (g) introductory text to read as follows:

§ 92.511 Remanufactured locomotives: installation audit requirements.

* * * * *

(g) Within 45 calendar days of the end of each quarter, each remanufacturer must submit to the Administrator a

report which includes the following information:

* * * * *

■ 165. Section 92.512 is amended by revising paragraph (e) to read as follows:

§ 92.512 Suspension and revocation of certificates of conformity.

* * * * *

(e) The Administrator shall notify the manufacturer or remanufacturer in writing of any suspension or revocation of a certificate of conformity in whole or in part; a suspension or revocation is effective upon receipt of such notification or thirty days from the time an engine family is deemed to be in noncompliance under §§ 92.508(d), 92.510(a), 92.510(b) or 92.511(f), whichever is earlier, except that the certificate is immediately suspended with respect to any failed locomotives or locomotive engines as provided for in paragraph (a) of this section.

* * * * *

■ 166. A new § 92.806 is added to read as follows:

§ 92.806 Importation of partially complete engines.

The provisions of 40 CFR 1068.330 apply for importation of partially complete engines, or engines that will be modified for applications other than those covered by this part 92.

■ 167. Section 92.906 is amended by revising paragraph (a) introductory text to read as follows:

§ 92.906 Manufacturer-owned, remanufacturer-owned exemption and display exemption.

(a) Any manufacturer-owned or remanufacturer-owned locomotive or locomotive engine is exempt from § 92.1103, without application, if the manufacturer complies with the following terms and conditions:

* * * * *

■ 168. Section 92.907 is amended by revising paragraphs (a)(3) and (b)(3) to read as follows:

§ 92.907 Non-locomotive-specific engine exemption.

(a) * * *

(3) The number of such engines exempted under this paragraph (a) does not exceed:

(i) 50 per manufacturer in any calendar year, where EPA determines that the use of the non-locomotive-specific engines will result in a significantly greater degree of emission control over the lifetime of the locomotive than using remanufactured engines certified under this part 92; or

(ii) 25 per manufacturer in any calendar year, where EPA has not determined that the use of the non-locomotive-specific engines will result in a significantly greater degree of emission control over the lifetime of the locomotive than using remanufactured engines certified under this part 92;

* * * * *

(b) * * *

(3) The number of such locomotives sold or leased by the locomotive manufacturer within any three-year period, and exempted under this paragraph (b) does not exceed 30; and

* * * * *

■ 169. A new § 92.912 is added to subpart J to read as follows:

§ 92.912 Staged-assembly exemption.

You may ask us to provide a temporary exemption to allow you to complete production of your engines at different facilities, as long as you maintain control of the engines until they are in their certified configuration. We may require you to take specific steps to ensure that such engines are in their certified configuration before reaching the ultimate purchaser. You may request an exemption under this section in your application for certification, or in a separate submission.

■ 170. Section 92.1106 is amended by revising paragraphs (a)(1), (a)(2), (a)(5), and (c)(1) and adding paragraph (a)(6) to read as follows:

§ 92.1106 Penalties.

(a) * * *

(1) A person who violates § 92.1103 (a)(1), (a)(4), or (a)(5), or a manufacturer, remanufacturer, dealer or railroad who violates § 92.1103(a)(3)(i) or (iii) is subject to a civil penalty of not more than $32,500 for each violation.

(2) A person other than a manufacturer, remanufacturer, dealer, or railroad who violates § 92.1103(a)(3)(i) or any person who violates § 92.1103(a)(3)(ii) is subject to a civil penalty of not more than $2,750 for each violation.

* * * * *

(5) A person who violates § 92.1103(a)(2) is subject to a civil penalty of not more than$32,500 per day of violation.

(6) The maximum penalty values listed in this section are shown for calendar year 2004. Maximum penalty limits for later years may be adjusted based on the Consumer Price Index. The specific regulatory provisions for changing the maximum penalties, published in 40 CFR part 19, reference the applicable U.S. Code citation on which the prohibited action is based.

* * * * *

(c) * * *

(1) *Administrative penalty authority.* In lieu of commencing a civil action under paragraph (b) of this section, the Administrator may assess any civil penalty prescribed in paragraph (a) of this section, except that the maximum amount of penalty sought against each violator in a penalty assessment proceeding shall not exceed $270,000, unless the Administrator and the Attorney General jointly determine that a matter involving a larger penalty amount is appropriate for administrative penalty assessment. Any such determination by the Administrator and the Attorney General is not subject to judicial review. Assessment of a civil penalty shall be by an order made on the record after opportunity for a hearing held in accordance with the procedures found at part 22 of this chapter. The Administrator may compromise, or remit, with or without conditions, any administrative penalty which may be imposed under this section.

* * * * *

■ 171. Appendix IV to part 92 is amended by revising paragraph (d)(1) to read as follows:

Appendix IV to Part 92—Guidelines for Determining Equivalency Between Emission Measurement Systems

* * * * *

(d) * * *

(1) Four locomotive or locomotive engine tests, conducted in accordance with the provisions of subpart B of this part; or

* * * * *

PART 94—CONTROL OF AIR POLLUTION FROM MARINE COMPRESSION-IGNITION ENGINES

■ 172. The authority citation for part 94 is revised to read as follows:

Authority: 42 U.S.C. 7401–7671q.

■ 173. Section 94.2 is amended in paragraph (b) by removing the definitions of *Auxiliary engine* and *Propulsion engine,* revising the definitions of *Marine engine, Marine vessel,* and *United States,* and adding a definition of *Amphibious vehicle* in alphabetical order to read as follows:

§ 94.2 Definitions.

* * * * *

Amphibious vehicle means a vehicle with wheels or tracks that is designed primarily for operation on land and secondarily for operation in water.

* * * * *

Marine engine means a nonroad engine that is installed or intended to be

installed on a marine vessel. This includes a portable auxiliary marine engine only if its fueling, cooling, or exhaust system is an integral part of the vessel. There are two kinds of marineengines:

(1) Propulsion marine engine means a marine engine that moves a vessel through the water or directs the vessel's movement.

(2) Auxiliary marine engine means a marine engine not used for propulsion.

Marine vessel has the meaning given in 1 U.S.C. 3, except that it does not include amphibious vehicles. The definition in 1 U.S.C. 3 very broadly includes every craft capable of being used as a means of transportation on water.

* * * * *

United States means the States, the District of Columbia, the Commonwealth of Puerto Rico, the Commonwealth of the Northern Mariana Islands, Guam, American Samoa, and the U.S. Virgin Islands.

* * * * *

■ 174. Section 94.9 is amended by revising paragraph (a)(3) to read as follows:

§ 94.9 Compliance with emission standards.

(a) * * *

(3) Manufacturers may request in the application for certification that we approve a shorter useful life for an engine family. We may approve a shorter useful life, in hours of engine operation but not in years, if we determine that these engines will rarely operate longer than the shorter useful life. If engines identical to those in the engine family have already been produced and are in use, the demonstration must include documentation from such in-use engines. In other cases, the demonstration must include an engineering analysis of information equivalent to such in-use data, such as data from research engines or similar engine models that are already in production. The demonstration must also include recommended overhaul intervals, any mechanical warranty offered for the engine or its components, and any relevant customer design specifications. The demonstration may include any other relevant information. The useful life value may not be shorter than any of the following:

(i) 1,000 hours of operation.

(ii) The recommended overhaul interval.

(iii) The mechanical warranty for the engine.

* * * * *

■ 175. Section 94.12 is amended by revising paragraph (h) to read as follows:

§ 94.12 Interim provisions.

* * * * *

(h) *Flexibility for small-volume boat builders.* Notwithstanding the other provisions of this part, manufacturers may sell uncertified recreational engines to small-volume boat builders during the first five years for which the emission standards in § 94.8 apply, subject to the following provisions:

(1) The U.S.-directed production volume of boats from any small-volume boat builder using uncertified engines during the total five-year period may not exceed 80 percent of the manufacturer's average annual production for the three years prior to the general applicability of the recreational engine standards in § 94.8, except as allowed in paragraph (h)(2) of this section.

(2) Small-volume boat builders may exceed the production limits in paragraph (h)(1) of this section, provided they do not exceed 20 boats during the five-year period or 10 boats in any single calendar year. This does not apply to boats powered by engines with displacement greater than 2.5 liters per cylinder.

(3) Small-volume boat builders must keep records of all the boats and engines produced under this paragraph (h), including boat and engine model numbers, serial numbers, and dates of manufacture. Records must also include information verifying compliance with the limits in paragraph (h)(1) or (2) of this section. Keep these records until at least two full years after you no longer use the provisions in this paragraph (h).

(4) Manufacturers must add a permanent, legible label, written in block letters in English, to a readily visible part of each engine exempted under this paragraph (h).

This label must include at least the following items:

(i) The label heading ''EMISSION CONTROL INFORMATION''.

(ii) Your corporate name and trademark.

(iii) Engine displacement (in liters), rated power, and model year of the engine or whom to contact for further information.

(iv) The statement ''THIS ENGINE IS EXEMPT UNDER 40 CFR 94.12(h)

FROM EMISSION STANDARDS AND RELATED REQUIREMENTS.''.

■ 176. Section 94.105 is amended by revising paragraph (b) before the table to read as follows:

§ 94.105 Duty cycles.

* * * * *

(b) *General cycle.* Propulsion engines that are used with (or intended to be used with) fixed-pitch propellers, propeller-law auxiliary engines, and any other engines for which the other duty cycles of this section do not apply, shall be tested using the duty cycle described in the following Table B–1:

* * * * *

■ 177. Section 94.106 is amended by revising paragraph (b)(3)(i) to read as follows:

§ 94.106 Supplemental test procedures for Category 1 and Category 2 marine engines.

* * * * *

(b) * * *

(3) * * *

(i) The Not to Exceed zone is the region above the curve power = $0.85SPD^4$, excluding all operation below 25% of maximum power at rated speed and excluding all operation below 63% of maximum test.

* * * * *

■ 178. Section 94.107 is amended by revising paragraph (b) to read as follows:

§ 94.107 Determination of maximum test speed.

* * * * *

(b) *Generation of lug curve.* Prior to beginning emission testing, generate maximum measured brakepower versus engine speed data points using the applicable method specified in 40 CFR 1065.510. These data points form the lug curve. It is not necessary to generate the entire lug curve. For the portion of the curve where power increases with increasing speed, it is not necessary to generate points with power less than 90 percent of the maximum power value. For the portion of the curve where power decreases with increasing speed, it is not necessary to generate points with power less than 75 percent of the maximum power value.

* * * * *

■ 179. Section 94.109 is amended by revising paragraph (b) to read as follows:

§ 94.109 Test procedures for Category 3 marine engines.

* * * * *

(b) Analyzers meeting the specifications of either 40 CFR part 1065, subpart C, or ISO 8178–1 (incorporated by reference in § 94.5) shall be used to measure THC and CO.

* * * * *

■ 180. Section 94.211 is amended by revising paragraph (k) to read as follows:

§ 94.211 Emission-related maintenance instructions for purchasers.

* * * * *

(k) For Category 3 engines, the manufacturer must provide the ultimate purchaser with a Technical File meeting the specifications of section 2.4 of the

Annex VI Technical Code(incorporated by reference in § 94.5). The maintenance instructions required by this part to be provided by manufacturer may be included in this Technical File. The manufacturer must provide a copy of this Technical File to EPA upon request.

* * * * *

■ 181. Section 94.212 is amended by revising paragraph (b)(6) and (b)(7) to read as follows:

§ 94.212 Labeling.

* * * * *

(b) * * *

(6) A prominent unconditional statement of compliance with U.S. Environmental Protection Agency regulations that apply to marine compression-ignition engines.

(7) The useful life of the engine, unless the applicable useful life is based on the provisions of § 94.9(a)(1).

* * * * *

■ 182. A new § 94.806 is added to read as follows:

§ 94.806 Importation of partially complete engines.

The provisions of 40 CFR 1068.330 apply for importation of partially complete engines, or engines that will be modified for applications other than those covered by this part 94.

■ 183. Section 94.904 is amended by revising paragraph (a) and adding a new paragraph (c) to read as follows:

§ 94.904 Exemptions.

(a) Except as specified otherwise in this subpart, the provisions of §§ 94.904 through 94.913 exempt certain new engines from the standards, other requirements, and prohibitions of this part, except for the requirements of this subpart and the requirements of § 94.1104. Additional requirements may apply for imported engines; these are described in subpart I of this part.

* * * * *

(c) If you want to take an action with respect to an exempted or excluded engine that is prohibited by the exemption or exclusion, such as selling it, you need to certify the engine. We will issue a certificate of conformity if you send us an application for certification showing that you meet all the applicable requirements from this part 94 and pay the appropriate fee. Also, in some cases, we may allow manufacturers to modify the engine as needed to make it identical to engines already covered by a certificate. We would base such an approval on our review of any appropriate documentation. Theseengines must have emission control information labels that accurately describe their status.

■ 184. Section 94.907 is revised to read as follows:

§ 94.907 Engine dressing exemption.

(a) *General provisions.* If you are an engine manufacturer, this section allows you to introduce new marine engines into commerce if they are already certified to the requirements that apply to compression-ignition engines under 40 CFR parts 85 and 86 or 40 CFR part 89, 92 or 1039 for the appropriate model year. If you comply with all the provisions of this section, we consider the certificate issued under 40 CFR part 86, 89, 92, or 1039 for each engine to also be a valid certificate of conformity under this part 94 for its model year, without a separate application for certification under the requirements of this part 94.

(b) *Boat-builder provisions.* If you are not an engine manufacturer, you may install an engine certified for the appropriate model year under 40 CFR part 86, 89, 92, or 1039 in a marine vessel as long as you do not make any of the changes described in paragraph(d)(3) of this section and you meet the requirements of paragraph (e) of this section. If you modify the non-marine engine in any of the ways described in paragraph (d)(3) of this section, we will consider you a manufacturer of a new marine engine. Such engine modifications prevent you from using the provisions of this section.

(c) *Liability.* Engines for which you meet the requirements of this section are exempt from all the requirements and prohibitions of this part, except for those specified in this section. Engines exempted under this section must meet all the applicable requirements from 40 CFR parts 85 and 86 or 40 CFR part 89, 92, or 1039. This paragraph (c) applies to engine manufacturers, boat builders who use such an engine, and all other persons as if the engine were used in its originally intended application. The prohibited acts of § 94.1103(a)(1) apply to these new engines and vessels; however, we consider the certificate issued under 40 CFR part 86, 89, 92, or 1039 for each engine to also be a valid certificate of conformity under this part 94 for its model year. If we make a determination that these engines do not conform to the regulations during their useful life, we may require you to recall them under this part 94 or under 40 CFR part 85, 89, 92, or 1039.

(d) *Specific requirements.* If you are an engine manufacturer and meet all the following criteria and requirements regarding your new marine engine, the engine is eligible for an exemption under this section:

(1) You must produce it by marinizing an engine covered by a valid certificate of conformity from one of the following programs:

(i) Heavy-duty highway engines (40 CFR part 86).

(ii) Land-based nonroad diesel engines (40 CFR part 89 or 1039).

(iii) Locomotive engines (40 CFR part 92).

(2) The engine must have the label required under 40 CFR part 86, 89, 92, or 1039.

(3) You must not make any changes to the certified engine that could reasonably be expected to increase its emissions. For example, if you make any of the following changes to one of these engines, you do not qualify for the engine dressing exemption:

(i) Change any fuel system parameters from the certified configuration, or change, remove, or fail to properly install any other component, element of design, or calibration specified in the engine manufacturer's application for certification. This includes aftertreatment devices and all related components.

(ii) Replacing an original turbocharger, except that small-volume manufacturers of recreational engines may replace an original turbocharger with one that matches the performance of the original turbocharger.

(iii) Modify or design the marine engine cooling or aftercooling system so that temperatures or heat rejection rates are outside the original engine manufacturer's specified ranges.

(4) You must show that fewer than 50 percent of the engine family's total sales in the United States are used in marine applications. This includes engines used in any application, without regard to which company manufactures the vessel orequipment. Show this as follows:

(i) If you are the original manufacturer of the engine, base this showing on your sales information.

(ii) In all other cases, you must get the original manufacturer of the engine to confirm this based on its sales information.

(e) If you are an engine manufacturer or boat builder using this exemption, you must do all of the following:

(1) Make sure the original engine label will remain clearly visible after installation in the vessel.

(2) Add a permanent supplemental label to the engine in a position where it will remain clearly visible after installation in the vessel. In your engine label, do the following:

(i) Include the heading: ''Marine Engine Emission Control Information''.

(ii) Include your full corporate name and trademark.

(iii) State: ''This engine was marinized without affecting its emission controls.''

(iv) State the date you finished marinizing the engine (month and year).

(3) Send a signed letter to the Designated Officer by the end of each calendar year (or less often if we tell you) with all the following information:

(i) Identify your full corporate name, address, and telephone number.

(ii) List the engine models for which you expect to use this exemption in the coming year and describe your basis for meeting the sales restrictions of paragraph (d)(4) of this section.

(iii) State: ''We prepare each listed engine model for marine application without making any changes that could increase its certified emission levels, as described in 40 CFR 94.907.''

(f) *Engine inventories.* In general you may use up your inventory of engines that are not certified to new marine emission standards if they were originally manufactured before the date of the new standards. However, stockpiling these engines is a violation of § 94.1103(a)(1)(i)(A).

(g) *Failure to comply.* If your engines do not meet the criteria listed in paragraph (d) of this section, they will be subject to the standards, requirements, and prohibitions of this part 94 and the certificate issued under 40 CFR part 86, 89, 92, or 1039 will not be deemed to also be a certificate issued under this part 94. Introducing these engines into commerce without a valid exemption or certificate of conformity under this part violates the prohibitions in 40 CFR 94.1103(a)(1).

(h) *Data submission.* (1) If you are the original manufacturer and marinizer of an exempted engine, you must send us emission test data on the appropriate marine duty cycles. You can include the data in your application for certification or in the letter described in paragraph (e)(3) of this section.

(2) If you are the original manufacturer of an exempted engine that is marinized by a post-manufacture marinizer, you may be required to send us emission test data on the appropriate marine duty cycles. If such data are requested you will be allowed a reasonable amount of time to collect the data.

(i) *Participation in averaging, banking and trading.* Engines adapted for marine use under this section may not generate or use emission credits under this part 94. These engines may generate credits under the ABT provisions in 40 CFR part 86, 89, 92, or 1039, as applicable. These engines must use emission credits under 40 CFR part 86, 89, 92, or 1039 as applicable if they are certified to an FEL that exceeds an applicable standard.

(j) *Operator requirements.* The requirements for vessel manufacturers, owners, and operators in subpart K of this part apply to these engines whether they are certified under this part 94 or another part as allowed by this section.

■ 185. A new § 94.912 is added to subpart J to read as follows:

§ 94.912 Optional certification to land-based standards for auxiliary marine engines.

This section applies to auxiliary marine engines that are identical to certified land-based engines. See § 94.907 for provisions that apply to propulsion marine engines or auxiliary marine engines that are modified for marine applications.

(a) *General provisions.* If you are an engine manufacturer, this section allows you to introduce new marine engines into commerce if they are already certified to the requirements that apply to compression-ignition engines under 40 CFR part 89 or 1039 for the appropriate model year. If you comply with all the provisions of this section, we consider the certificate issued under 40 CFR part 86 or 1039 for each engine to also be a valid certificate of conformity under this part 94 for its model year, without a separate application for certification under the requirements of this part 94.

(b) *Boat builder provisions.* If you are not an engine manufacturer, you may install an engine certified for land-based applications in a marine vessel as long as you meet all the qualifying criteria and requirements specified in paragraphs (d) and (e) of this section. If you modify the non-marine engine, we will consider you a manufacturer of a new marine engine. Such engine modifications prevent you from using the provisions of this section.

(c) *Liability.* Engines for which you meet the requirements of this section are exempt from all the requirements and prohibitions of this part, except for those specified in this section. Engines exempted under this section must meet all the applicable requirements from 40 CFR part 89 or 1039. This paragraph (c) applies to engine manufacturers, boat builders who use such an engine, and all other persons as if the engine were used in its originally intended application. The prohibited acts of § 94.1103(a)(1) apply to these new engines and vessels; however, we consider the certificate issued under 40 CFR part 89 or 1039 for each engine to also be a valid certificate of conformity under this part 94 for its model year. If we make a determination that these engines do not conform to the regulations during their useful life, we may require you to recall them under this part 94 or under 40 CFR part 89 or 1068.

(d) *Qualifying criteria.* If you are an engine manufacturer and meet all the following criteria and requirements regarding your new marine engine, the engine is eligible for an exemption under this section:

(1) The marine engine must be identical in all material respects to a land-based engine covered by a valid certificate of conformity for the appropriate model year showing that it meets emission standards for engines of that power rating under 40 CFR part 89 or 1039.

(2) The engines may not be used as propulsion marine engines.

(3) You must show that the number of auxiliary marine engines from the engine family must be smaller than the number of land-based engines from the engine family sold in the United States, as follows:

(i) If you are the original manufacturer of the engine, base this showing on your sales information.

(ii) In all other cases, you must get the original manufacturer of the engine to confirm this based on its sales information.

(e) *Specific requirements.* If you are an engine manufacturer or boat builder using this exemption, you must do all of the following:

(1) Make sure the original engine label will remain clearly visible after installation in the vessel. This label or a supplemental label must identify that the original certification is valid for marine auxiliary applications.

(2) Send a signed letter to the Designated Officer by the end of each calendar year (or less often if we tell you) with all the following information:

(i) Identify your full corporate name, address, and telephone number.

(ii) List the engine models you expect to produce under this exemption in the coming year.

(iii) State: ''We produce each listed engine model for marine application without making any changes that could increase its certified emission levels, as described in 40 CFR 94.907.''

(3) If you are the certificate holder, you must describe in your application for certification how you plan to produce engines for both land-based and auxiliary marine applications, including projected sales of auxiliary marine engines to the extent this can be determined. If the projected marine sales are substantial, we may ask for the

year-end report of production volumes to include actual auxiliary marine engine sales.

(f) *Failure to comply.* If your engines do not meet the criteria listed in paragraph (d) of this section, they will be subject to the standards, requirements, and prohibitions of this part 94 and the certificate issued under 40 CFR part 89 or 1039 will not be deemed to also be a certificate issued under this part 94. Introducing these engines into commerce without a valid exemption or certificate of conformity under this part violates the prohibitions in 40 CFR 94.1103(a)(1).

(g) *Participation in averaging, banking and trading.* Engines using this exemption may not generate or use emission credits under this part 94. These engines may generate credits under the ABT provisions in 40 CFR part 89 or 1039, as applicable. These engines must use emission credits under 40 CFR part 89 or 1039 as applicable if they are certified to an FEL that exceeds an applicable standard.

(h) *Operator requirements.* The requirements for vessel manufacturers, owners, and operators in subpart K of this part apply to these engines whether they are certified under this part 94 or another part as allowed by this section.

■ 186. A new § 94.913 is added to subpart J to read as follows:

§ 94.913 Staged-assembly exemption.

You may ask us to provide a temporary exemption to allow you to complete production of your engines at different facilities, as long as you maintain control of the engines until they are in their certified configuration. We may require you to take specific steps to ensure that such engines are in their certified configuration before reaching the ultimate purchaser. You may request an exemption under this section in your application for certification, or in a separate submission to the Designated Officer.

■ 187. Section 94.1004 is amended by revising paragraphs (b) and (c) introductory text to read as follows:

§ 94.1004 Maintenance, repair, adjustment, and recordkeeping.

* * * * *

(b) Unless otherwise approved by the Administrator, all maintenance, repair, adjustment,and alteration of Category 3 engines subject to the provisions of this part performed by any owner, operator or other maintenance provider that is not covered by paragraph (a) of this section shall be performed, using good engineering judgment, in such a manner that the engine continues (after the maintenance, repair, adjustment or alteration) to meet the emission standards it was certified as meeting prior to the need for service. Adjustmentsare limited to the range specified by the engine manufacturer in the approved application for certification.

(c) A Category 3 engine may not be adjusted or altered contrary to the requirements of § 94.11 or paragraph (b) of this section, except as allowed by § 94.1103(b)(2). If such an adjustment or alteration occurs, the engine must be returned to a configuration allowed by this part within two hours of operation. Each two-hour period during which there is noncompliance is a separate violation. The following provisions apply to adjustments oralterations made under § 94.1103(b)(2):

* * * * *

■ 188. Section 94.1103 is amended by revising paragraph (b)(3) and adding paragraphs (a)(8) and (b)(4) to read as follows:

§ 94.1103 Prohibited acts.

(a) * * *

(8) For an owner or operator of a vessel installing a replacement engine under the provisions of paragraph (b)(4) of this section to make modifications to significantly increase the value of the vessel within six months after installing the replacement engine.

(b) * * *

(3) Where the Administrator determines that no engine that is certified to the requirements of this part is produced by any manufacturer with the appropriate physical or performance characteristics to repower a vessel, the Administrator may allow an engine manufacturer to introduce into commerce a replacement engine without complying with all of the otherwise applicable requirements of this part. Such engine shall not be subject to the prohibitions of paragraph (a)(1) of this section, subject to all the following provisions:

(i) The engine requiring replacement is not certified or is certified to emission standards that are less stringent than those in effect when the replacement engine is built.

(ii) The engine manufacturer or its agent takes ownership and possession of the engine being replaced or confirms that the engine has been destroyed.

(iii) If the engine being replaced was not certified to any emission standards under this part, the replacement engine must have a permanent label with your corporate name and trademark and the following language, or similar alternate language approved by the Administrator:

THIS ENGINE DOES NOT COMPLY WITH U.S. EPA MARINE EMISSION REQUIREMENTS. SELLING OR INSTALLING THIS ENGINE FOR ANY PURPOSE OTHER THAN TO REPLACE A MARINE ENGINE BUILT BEFORE JANUARY 1, [Insert appropriate year reflecting when the earliest tier of standards began to apply to engines of that size and type] MAY BE A VIOLATION OF FEDERAL LAW SUBJECT TO CIVIL PENALTY.

(iv) If the engine being replaced was certified to emission standards less stringent than those in effect when you produce the replacement engine, the replacement engine must have a permanent label with your corporate name and trademark and the following language, or similar alternate language approved by the Administrator:

THIS ENGINE COMPLIES WITH U.S. EPA MARINE EMISSION REQUIREMENTS FOR [Insert appropriate year reflecting when the Tier 1 or Tier 2 standards for the replaced engine began to apply] ENGINES UNDER 40 CFR 94.1103(b)(3). SELLING OR INSTALLING THIS ENGINE FOR ANY PURPOSE OTHER THAN TO REPLACE A MARINE ENGINEBUILT BEFORE JANUARY 1, [Insert appropriate year reflecting when the next tier of emission standards began to apply] MAY BE A VIOLATION OF FEDERAL LAW SUBJECT TO CIVIL PENALTY.

(v) Where the replacement engine is intended to replace an engine that is certified to emission standards that are less stringent than those in effect when the replacement engine is built, the replacement engine shall be identical in all material respects to a certified configuration of the same or later model year as the engine being replaced.

(vi) Engines sold pursuant to the provisions of this paragraph will neither generate nor use emission credits and will not be part of any accounting under the averaging, banking and trading program.

(vii) In cases where an engine is to be imported for replacement purposes under the provisions of this paragraph (b)(3) of this section, the term ''engine manufacturer'' shall not apply to an individual or other entity that does not possess a current Certificate of Conformity issued by EPA under this part; and

(viii) The provisions of this section may not be used to circumventemission standards that apply to new engines under this part.

(4) An engine manufacturer may make the determination related to replacement engines described in paragraph (b)(3) of this section instead

of the Administrator, if the new engine is needed to replace an engine that has experienced catastrophic failure. The engine manufacturer must consider whether certified engines are available from its own product lineup or that of the manufacturer of the engine being replaced (if different). The engine manufacturer must keep records explaining why a certified engine was not available and make these records available upon request.

■ 189. Section 94.1106 is amended by revising the introductory text and paragraphs (a)(1), (a)(2), (c)(1), and (d) to read as follows:

§ 94.1106 Penalties.

This section specifies actions that are prohibited and the maximum civil penalties that we can assess for each violation. The maximum penalty values listed in paragraphs (a) and (c) of this section are shown for calendar year 2004. As described in paragraph (d) of this section, maximum penalty limits for later years are set forth in 40 CFR part 19.

(a) * * *

(1) A person who violates § 94.1103(a)(1), (a)(4), (a)(5), (a)(6), or (a)(7)(iv) or a manufacturer or dealer who violates § 94.1103(a)(3)(i) or (iii) or § 94.1103(a)(7) is subject to a civil penalty of not more than $32,500 for each violation.

(2) A person other than a manufacturer or dealer who violates § 94.1103(a)(3)(i) or (iii) or§ 94.1103(a)(7)(i), (ii), or (iii) or any person who violates § 94.1103(a)(3)(ii) is subject to a civil penalty of not more than $2,750 for each violation.

* * * * *

(c) * * *

(1) Administrative penalty authority. Subject to 42 U.S.C. 7524(c), in lieu of commencing a civil action under paragraph (b) of this section, the Administrator may assess any civil penalty prescribed in paragraph (a) of this section, except that the maximum amount of penalty sought against each violator in a penalty assessment proceeding shall not exceed $270,000, unless the Administrator and the Attorney General jointly determine that a matter involving a larger penalty amount is appropriate for administrative penalty assessment. Any such determination by the Administrator and the Attorney General is not subject to judicial review. Assessment of a civil penalty shall be by an order made on the record after opportunity for a hearing held in accordance with the procedures found at part 22 of this chapter. The Administrator may compromise, or remit, with or without conditions, any administrative penalty which may be imposed under this section.

* * * * *

(d) The maximum penalty values listed in paragraphs (a) and (c) of this section are shown for calendar year 2004. Maximum penalty limits for later years may be adjusted based on the Consumer Price Index. The specific regulatory provisions for changing the maximum penalties, published in 40 CFR part 19, reference the applicable U.S. Code citation on which the prohibited action is based.

PART 1039—CONTROL OF EMISSIONS FROM NEW AND IN-USE NONROADCOMPRESSION-IGNITION ENGINES

■ 190. The authority citation for part 1039 is revised to read as follows:

Authority: 42 U.S.C. 7401–7671q.

■ 191. Section 1039.1 is amended by revising paragraph (c) to read as follows:

§ 1039.1 Does this part apply for my engines?

* * * * *

(c) The definition of nonroad engine in 40 CFR 1068.30 excludes certain engines used in stationary applications. These engines are not required to comply with this part, except for the requirements in § 1039.20. In addition, if these engines are uncertified, the prohibitions in 40 CFR 1068.101 restrict their use as nonroad engines.

* * * * *

■ 192. Section 1039.5 is amended by revising paragraphs (b)(1)(iii) and (b)(2) to read as follows:

§ 1039.5 Which engines are excluded from this part's requirements?

* * * * *

(b) * * *

(1) * * *

(iii) Engines that are exempt from the standards of 40 CFR part 94 pursuant to the provisions of 40 CFR part 94 (except for the provisions of 40 CFR 94.907 or 94.912). For example, an engine that is exempt under 40 CFR 94.906 because it is a manufacturer-owned engine is not subject to the provisions of this part 1039.

* * * * *

(2) Marine engines are subject to the provisions of this part 1039 if they are exempt from 40 CFR part 94 based on the engine-dressing provisions of 40 CFR 94.907 or the common-family provisions of 40 CFR 94.912.

* * * * *

■ 193. Section 1039.10 is amended by revising the introductory text to read as follows:

§ 1039.10 How is this part organized?

The regulations in this part 1039 contain provisions that affect both engine manufacturers and others. However, the requirements of this part are generally addressed to the engine manufacturer. The term ''you'' generally means the engine manufacturer, as defined in § 1039.801. This part 1039 is divided into the following subparts:

* * * * *

■ 194. Section 1039.101 is amended by revising paragraph (g)(2) to read as follows:

§ 1039.101 What exhaust emission standards must my engines meet after the 2014 model year?

* * * * *

(g) * * *

(2) You may request in your application for certification that we approve a shorter useful life for an engine family. We may approve a shorter useful life, in hours of engine operation but not in years, if we determine that these engines will rarely operate longer than the shorter useful life. If engines identical to those in the engine family have already been produced and are in use, your demonstration must include documentation from such in-use engines. In other cases, your demonstration must include an engineering analysis of information equivalent to such in-use data, such as data from research engines or similar engine models thatare already in production. Your demonstration must also include any overhaul interval that you recommend, any mechanical warranty that you offer for the engine or its components, and any relevant customer design specifications. Your demonstration may include any other relevant information. The useful life value may not be shorter than any of the following:

(i) 1,000 hours of operation.

(ii) Your recommended overhaul interval.

(iii) Your mechanical warranty for the engine.

* * * * *

■ 195. Section 1039.104 is amended by revising paragraph (a)(4)(iii) to read as follows:

§ 1039.104 Are there interim provisions that apply only for a limited time?

* * * * *

(a) * * *

(4) * * *

(iii) All other offset-using engines must meet the standards and other provisions that apply in model year 2011 for engines in the 19–130 kW power categories, in model year 2010 for

engines in the 130–560 kW power category, or in model year 2014 for engines above 560 kW. Show that engines meet these emission standards by meeting all the requirements of § 1068.265. You must meet the labeling requirements in § 1039.135, but add the following statement instead of the compliance statement in § 1039.135(c)(12): ''THIS ENGINE MEETS U.S. EPA EMISSIONSTANDARDS UNDER 40 CFR 1039.104(a).'' For power categories witha percentage phase-in, these engines should be treated as phase-in engines for purposes of determining compliance with phase-in requirements.

* * * * *

■ 196. Section 1039.120 is amended by revising paragraph (b) before the table to read as follows:

§ 1039.120 What emission-related warranty requirements apply to me?

* * * * *

(b) *Warranty period.* Your emission-related warranty must be valid for at least as long as the minimum warranty periods listed in this paragraph (b) in hours of operation and years, whichever comes first. You may offer an emission-related warranty more generous than we require. The emission-related warranty for the engine may not be shorter than any published warranty you offer without charge for the engine. Similarly, the emission-related warranty for any component may not be shorter than any published warranty you offer without charge for that component. If an engine has no hour meter, we base the warranty periods in this paragraph (b) only on the engine's age (in years). The warranty period begins when the engine is placed into service. The minimum warranty periods are shown in the following table:

* * * * *

■ 197. Section 1039.125 is amended by revising paragraph (g) introductory text to readas follows:

§ 1039.125 What maintenance instructions must I give to buyers?

* * * * *

(g) *Payment for scheduled maintenance.* Owners are responsible for properly maintaining their engines. This generally includes paying for scheduled maintenance. However, manufacturers must pay for scheduled maintenance during the useful life if it meets all the following criteria:

* * * * *

■ 198. Section 1039.130 is amended by revising paragraph (b)(3) to read as follows:

§ 1039.130 What installation instructions must I give to equipment manufacturers?

* * * * *

(b) * * *

(3) Describe the instructions needed to properly install the exhaust system and any other components. Include instructions consistent with the requirements of § 1039.205(u).

* * * * *

■ 199. Section 1039.225 is amended by revising the section heading and adding paragraphs (a)(3) and (f) to read as follows:

§ 1039.225 How do I amend my application for certification to include new or modified engines or to change an FEL?

* * * * *

(a) * * *

(3) Modify an FEL for an engine family, as described in paragraph (f) of this section.

* * * * *

(f) You may ask to change your FEL in the following cases:

(1) You may ask to raise your FEL after the start of production. You may not apply the higher FEL to engines you have already introduced into commerce. Use the appropriate FELs with corresponding sales volumes to calculate your averageemission level, as described in subpart H of this part. In your request, you must demonstrate that you will still be able to comply with the applicable averageemission standards as specified in subparts B and H of this part.

(2) You may ask to lower the FEL for your engine family after the start of production only when you have test data from production engines indicating that your engines comply with the lower FEL. You may create a separate subfamily with the lower FEL. Otherwise, you must use the higher FEL for the family to calculate your average emission level under subpart H of this part.

(3) If you change the FEL during production, you must include the new FEL on the emission control information label for all engines produced after the change.

■ 200. Section 1039.240 is amended by revising paragraphs (a) and (b) to read as follows:

§ 1039.240 How do I demonstrate that my engine family complies with exhaust emission standards?

(a) For purposes of certification, your engine family is considered in compliance with the applicable numerical emission standards in § 1039.101(a) and (b), § 1039.102(a) and (b), § 1039.104, and § 1039.105 if all emission-data engines representing that family have test results showing deteriorated emission levels at or below these standards. (Note: if you participate in the ABT program in subpart H of this part, your FELs are considered to be the applicable emission standards with which you must comply.)

(b) Your engine family is deemed not to comply if any emission-data engine representing that family has test results showing a deteriorated emission level above an applicable FEL or emission standard from § 1039.101, § 1039.102, § 1039.104, or § 1039.105 for any pollutant.

* * * * *

§ 1039.260 [Removed]

■ 201. Section 1039.260 is removed.

■ 202. Section 1039.501 is amended by revising paragraph (a) to read as follows:

§ 1039.501 How do I run a valid emission test?

(a) Use the equipment and procedures for compression-ignition engines in 40 CFR part 1065 to determine whether engines meet the duty-cycle emission standards in § 1039.101(a) and (b). Measure the emissions of all the pollutants we regulate in § 1039.101 as specified in 40 CFR part 1065. Use the applicable duty cycles specified in §§ 1039.505 and 1039.510.

* * * * *

§ 1039.510 [Amended]

■ 203. Section 1039.510 is amended by removing paragraphs (c) and (d).

■ 204. Section 1039.605 is amended by revising the section heading and adding paragraph (g) to read as follows:

§ 1039.605 What provisions apply to engines certified under the motor-vehicle program?

* * * * *

(g) *Participation in averaging, banking and trading.* Engines adapted for nonroad use under this section may not generate or use emission credits under this part 1039. These engines may generate credits under the ABT provisions in 40 CFR part 86. These engines must use emission credits under 40 CFR part 86 if they are certified to an FEL that exceeds an applicable standard under 40 CFR part 86.

■ 205. Section 1039.610 is amended by revising the section heading and adding paragraph (g) to read as follows:

§ 1039.610 What provisions apply to vehicles certified under the motor-vehicle program?

* * * * *

(g) *Participation in averaging, banking and trading.* Vehicles adapted for nonroad use under this section may not generate or use emission credits under

this part 1039. These vehicles may generate credits under the ABT provisions in 40 CFR part 86. These vehicles must be included in the calculation of the applicable fleet average in 40 CFR part 86.

■ 206. Section 1039.625 is amended by revising the last entry in Table 1 and paragraph (j) to read as follows:

§ 1039.625 What requirements apply under the program for equipment-manufacturer flexibility?

* * * * *

(a) * * *

(1) * * *

TABLE 1 OF § 1039.625.—GENERAL AVAILABILITY OF ALLOWANCES

Power category	Calendar years
* * * * * * *	
kW > 560	2011–2017

* * * * *

(j) *Provisions for engine manufacturers.* As an engine manufacturer, you may produceexempted engines as needed under this section. You do not have to request thisexemption for your engines, but you must have written assurance from equipment manufacturers that they need a certain number of exempted engines under this section. Send us an annual report of the engines you produce under this section, as described in § 1039.250(a). For engines produced under the provisions of paragraph (a)(2) of this section, you must certify the engines under this part 1039. For all other exempt engines, the engines must meet the emission standards in paragraph (e) of this section and you must meet all the requirements of 40 CFR 1068.265. If you show under 40 CFR 1068.265(c) that the engines are identical in all material respects to engines that you have previously certified to one or more FELs above the standards specified in paragraph (e) of this section, you must supply sufficient credits for these engines. Calculate these credits under subpart H of this part using the previously certified FELs and the alternate standards. You must meet the labeling requirements in 40 CFR 89.110, but add the following statement instead of the compliance statement in 40 CFR 89.110(b)(10):

THIS ENGINE MEETS U.S. EPA EMISSION STANDARDS UNDER 40 CFR 1039.625. SELLING OR INSTALLING THIS ENGINE FOR ANY PURPOSEOTHER THAN FOR THE EQUIPMENT FLEXIBILITY PROVISIONS OF 40CFR 1039.625 MAY BE A VIOLATION OF FEDERAL LAW SUBJECT TOCIVIL PENALTY.

* * * * *

■ 207. Section 1039.655 is amended by revising paragraph (a)(3) to read as follows:

§ 1039.655 What special provisions apply to engines sold in Guam, American Samoa, or the Commonwealth of the Northern Mariana Islands?

(a) * * *

(3) You meet all the requirements of 40 CFR 1068.265.

* * * * *

■ 208. Section 1039.740 amended by adding paragraph (b)(4) to read as follows:

§ 1039.740 What restrictions apply for using emission credits?

* * * * *

(b) * * *

(4) If the maximum power of an engine generating credits under the Tier 2 standards in 40 CFR part 89 is at or above 37 kW and below 75 kW, you may use those credits for certifying engines under the Option #1 standards in § 1039.102.

* * * * *

■ 209. Section 1039.801 is amended by revising the definitions for *Aftertreatment*, *Brake power*, *Constant-speed operation*, *Exempted*, *Good engineering judgment*, *Marineengine*, *Marine vessel*, *Maximum test speed*, *Motor vehicle*, *Revoke*, *Suspend*,*United States*, and *Void* and adding a definition for *Amphibious vehicle* to read as follows:

§ 1039.801 What definitions apply to this part?

* * * * *

Aftertreatment means relating to a catalytic converter, particulate filter, or any other system, component, or technology mounted downstream of the exhaust valve (orexhaust port) whose design function is to decrease emissions in the engine exhaust before it is exhausted to the environment. Exhaust-gas recirculation (EGR) and turbochargers are not aftertreatment.

* * * * *

Amphibious vehicle means a vehicle with wheels or tracks that is designed primarily for operation on land and secondarily for operation in water.

* * * * *

Brake power means the usable power output of the engine, not including power required to fuel, lubricate, or heat the engine, circulate coolant to the engine, or to operateaftertreatment devices.

* * * * *

Constant-speed operation means engine operation with a governor that controls the operator input to maintain an engine at a reference speed, even under changing load. For example, an isochronous governor changes reference speed temporarily during a load change, then returns the engine to its original reference speed after the engine stabilizes. Isochronous governors typically allow speed changes up to 1.0%. Another example is a speed-droop governor, which has a fixed reference speed at zero load and allows the reference speed to decrease as load increases. With speed-droop governors, speed typically decreases (3 to 10)% below the reference speed at zero load, such that the minimum reference speed occurs near the engine's point of maximum power.

* * * * *

Exempted has the meaning we give in 40 CFR 1068.30.

* * * * *

Good engineering judgment has the meaning we give in 40 CFR 1068.30. See 40 CFR 1068.5 for the administrative process we use to evaluate good engineering judgment.

* * * * *

Marine engine means a nonroad engine that is installed or intended to be installed on a marine vessel. This includes a portable auxiliary marine engine only if its fueling, cooling, or exhaust system is an integral part of the vessel. There are two kinds of marineengines:

(1) Propulsion marine engine means a marine engine that moves a vessel

through the water or directs the vessel's movement.

(2) Auxiliary marine engine means a marine engine not used for propulsion.

Marine vessel has the meaning given in 1 U.S.C. 3, except that it does not include amphibious vehicles. The definition in 1 U.S.C. 3 very broadly includes every craft capable of being used as a means of transportation on water.

* * * * *

Maximum test speed has the meaning we give in 40 CFR 1065.1001.

* * * * *

Motor vehicle has the meaning we give in 40 CFR 85.1703(a).

* * * * *

Revoke has the meaning we give in 40 CFR 1068.30.

* * * * *

Suspend has the meaning we give in 40 CFR 1068.30.

* * * * *

United States has the meaning we give in 40 CFR 1068.30.

* * * * *

Void has the meaning we give in 40 CFR 1068.30.

* * * * *

■ 210. Appendix VI to part 1039 is amended in the table by adding a footnote to read as follows:

Appendix VI to Part 1039—Nonroad Compression-Ignition Composite TransientCycle

Time(s)	Normalized speed (percent)	Normalized torque (percent)[1]
* *	* *	* *

[1] The percent torque is relative to maximum torque at the commanded engine speed.

PART 1048—CONTROL OF EMISSIONS FROM NEW, LARGE NONROAD SPARK-IGNITION ENGINES

■ 211. The authority citation for part 1048 is revised to read as follows:

Authority: 42 U.S.C. 7401—7671q.

■ 212. The heading for subpart A is revised to read as follows:

Subpart A—Overview and Applicability

■ 213. Section 1048.1 is revised to read as follows:

§ 1048.1 Does this part apply to me?

(a) The regulations in this part 1048 apply for all new, spark-ignition nonroad engines (defined in § 1048.801) with maximum engine power above 19 kW, except as provided in § 1048.5.

(b) This part 1048 applies for engines built on or after January 1, 2004. You need not follow this part for engines you produce before January 1, 2004. *See* §§ 1048.101 through 1048.115, § 1048.145, and the definition of model year in § 1048.801 for more information about the timing of new requirements.

(c) The definition of nonroad engine in 40 CFR 1068.30 excludes certain engines used in stationary applications. These engines are not required to comply with this part, except for the requirements in § 1048.20. In addition, if these engines are uncertified, the prohibitions in 40 CFR 1068.101 restrict their use as nonroad engines.

(d) In certain cases, the regulations in this part 1048 apply to engines with maximum engine power at or below 19 kW that would otherwise be covered by 40 CFR part 90. *See* 40 CFR 90.913 for provisions related to this allowance.

■ 214. Section 1048.5 is revised to read as follows:

§ 1048.5 Which engines are excluded from this part's requirements?

This part does not apply to the following nonroad engines:

(a) Engines that are certified to meet the requirements of 40 CFR part 1051, or are otherwise subject to 40 CFR part 1051 (for example, engines used in snowmobiles and all-terrain vehicles).

(b) *Propulsion marine engines. See* 40 CFR part 91. This part applies with respect to auxiliary marine engines.

■ 215. Section 1048.10 is revised to read as follows:

§ 1048.10 How is this part organized?

The regulations in this part 1048 contain provisions that affect both engine manufacturers and others. However, the requirements of this part are generally addressed to the engine manufacturer. The term ''you'' generally means the engine manufacturer, as defined in § 1048.801. This part 1048 is divided into the following subparts:

(a) Subpart A of this part defines the applicability of part 1048 and gives an overview of regulatory requirements.

(b) Subpart B of this part describes the emission standards and other requirements that must be met to certify engines under this part. Note that § 1048.145 discusses certain interim requirements and compliance provisions that apply only for a limited time.

(c) Subpart C of this part describes how to apply for a certificate of conformity.

(d) Subpart D of this part describes general provisions for testing production-line engines.

(e) Subpart E of this part describes general provisions for testing in-use engines.

(f) Subpart F of this part describes how to test your engines (including references to other parts of the Code of Federal Regulations).

(g) Subpart G of this part and 40 CFR part 1068 describe requirements, prohibitions, and other provisions that apply to engine manufacturers, equipment manufacturers, owners, operators, rebuilders, and all others.

(h) [Reserved]

(i) Subpart I of this part contains definitions and other reference information.

■ 216. Section 1048.15 is revised to read as follows:

§ 1048.15 Do any other regulation parts affect me?

(a) Part 1065 of this chapter describes procedures and equipment specifications for testing engines. Subpart F of this part 1048 describes how to apply the provisions of part 1065 of this chapter to determine whether engines meet the emission standards in this part.

(b) The requirements and prohibitions of part 1068 of this chapter apply to everyone, including anyone who manufactures, imports, installs, owns, operates, or rebuilds any of the engines subject to this part 1048, or equipment containing these engines. Part 1068 of this chapter describes general provisions, including these seven areas:

(1) Prohibited acts and penalties for engine manufacturers, equipment manufacturers, and others.

(2) Rebuilding and other aftermarket changes.

(3) Exclusions and exemptions for certain engines.

(4) Importing engines.

(5) Selective enforcement audits of your production.

(6) Defect reporting and recall.

(7) Procedures for hearings.

(c) Other parts of this chapter apply if referenced in this part.

■ 217. Section 1048.20 is revised to read as follows:

§ 1048.20 What requirements from this part apply to excluded stationary engines?

(a) You must add a permanent label or tag to each new engine you produce or import that is excluded under § 1048.1(c) as a stationary engine. To meet labeling requirements, you must do the following things:

(1) Attach the label or tag in one piece so no one can remove it without destroying or defacing it.

(2) Secure it to a part of the engine needed for normal operation and not normally requiring replacement.

(3) Make sure it is durable and readable for the engine's entire life.

(4) Write it in English.

(5) Follow the requirements in § 1048.135(g) regarding duplicate labels if the engine label is obscured in the final installation.

(b) Engine labels or tags required under this section must have the following information:

(1) Include the heading ''EMISSION CONTROL INFORMATION''.

(2) Include your full corporate name and trademark. You may instead include the full corporate name and trademark of another company you choose to designate.

(3) State the engine displacement (in liters) and maximum engine power.

(4) State: ''THIS ENGINE IS EXCLUDED FROM THE REQUIREMENTS OF 40 CFR PART 1048 AS A ''STATIONARY ENGINE.'' INSTALLING ORUSING THIS ENGINE IN ANY OTHER APPLICATION MAY BE AVIOLATION OF FEDERAL LAW SUBJECT TO CIVIL PENALTY.''.

■ 218. Section 1048.101 is amended by revising the introductory text and paragraphs (a), (b), (c), (e), (g), and (h) to read as follows:

§ 1048.101 What exhaust emission standards must my engines meet?

The exhaust emission standards of this section apply by model year. You may certify engines earlier than we require. The Tier 1 standards apply only to steady-state testing, as described in paragraph (b) of this section. The Tier 2 standards apply to steady-state, transient, and field testing, as described in paragraphs (a), (b), and (c) of this section.

(a) *Emission standards for transient testing.* Starting in the 2007 model year, transient exhaust emissions from your engines may not exceed the Tier 2 emission standards, as follows:

(1) Measure emissions using the applicable transient test procedures described in subpart F of this part.

(2) The Tier 2 $HC+NO_X$ standard is 2.7 g/kW-hr and the Tier 2 CO standard is 4.4 g/kW-hr. For severe-duty engines, the Tier 2 $HC+NO_X$ standard is 2.7 g/kW-hr and the Tier 2 CO standard is 130.0 g/kW-hr. The following engines are not subject to the transient standards in this paragraph (a):

(i) High-load engines.

(ii) Engines with maximum engine power above 560 kW.

(iii) Engines with maximum test speed above 3400 rpm.

(3) You may optionally certify your engines according to the following formula instead of the standards in paragraph (a)(1) of this section: $(HC+NO_X) \times CO^{0.784} \leq 8.57$. The $HC+NO_X$ and CO emission levels you select to satisfy this formula, rounded to the nearest 0.1 g/kW-hr, become the emission standards that apply for those engines. You may not select an $HC+NO_X$ emission standard higher than 2.7 g/kW-hr or a CO emission standard higher than 20.6 g/kW-hr. The following table illustrates a range of possible values under this paragraph (a)(3):

TABLE 1 OF § 1048.101.—EXAMPLES OF POSSIBLE TIER 2 DUTY-CYCLE EMISSION STANDARDS

$HC+NO_X$ (g/kW-hr)	CO (g/kW-hr)
2.7	4.4
2.2	5.6
1.7	7.9
1.3	11.1
1.0	15.5
0.8	20.6

(b) *Standards for steady-state testing.* Except as we allow in paragraph (d) of this section, steady-state exhaust emissions from your engines may not exceed emission standards, as follows:

(1) Measure emissions using the applicable steady-state test procedures described in subpart F of this part:

(2) The following table shows the Tier 1 exhaust emission standards that apply to engines from 2004 through 2006 model years:

TABLE 2 OF § 1048.101.—TIER 1 EMISSION STANDARDS (G/KW–HR)

Testing	General emission standards		Alternate emission standards for severe-duty engines	
	$HC+NO_X$	CO	$HC+NO_X$	CO
Certification and production-line testing	4.0	50.0	4.0	130.0
In-use testing	5.4	50.0	5.4	130.0

(3) Starting in the 2007 model year, steady-state exhaust emissions from your engines may not exceed the numerical emission standards in paragraph (a) of this section. See paragraph (d) of this section for alternate standards that apply for certain engines.

(c) *Standards for field testing.* Starting in 2007, exhaust emissions may not exceed field-testing standards, as follows:

(1) Measure emissions using the field-testing procedures in subpart F of this part:

(2) The $HC+NO_X$ standard is 3.8 g/kW-hr and the CO standard is 6.5 g/kW-hr. For severe-duty engines, the $HC+NO_X$ standard is 3.8 g/kW-hr and the CO standard is 200.0 g/kW-hr. For natural gas-fueled engines, you are not required to measure nonmethane hydrocarbon emissions or total hydrocarbon emissions for testing to show that the engine meets the emission standards of this paragraph (c); that is, you may assume HC emissions are equal to zero.

(3) You may apply the following formula to determine alternate emission standards that apply to your engines instead of the standards in paragraph (c)(1) of this section: $(HC+NO_X) \times CO^{0.791} \leq 16.78$. $HC+NO_X$ emission levels may not exceed 3.8 g/kW-hr and CO emission levels may not exceed 31.0 g/kW-hr. The following table illustrates a range of possible values under this paragraph (c)(2):

TABLE 3 OF § 1048.101.—EXAMPLES OF POSSIBLE TIER 2 FIELD-TESTING EMISSION STANDARDS

$HC+NO_X$ (g/kW-hr)	CO (g/kW-hr)
3.8	6.5
3.1	8.5
2.4	11.7
1.8	16.8
1.4	23.1
1.1	31.0

* * * * *

(e) *Fuel types.* The exhaust emission standards in this section apply for engines using each type of fuel specified in 40 CFR part 1065, subpart H, on which the engines in the engine family are designed to operate, except for engines certified under § 1048.625. For engines certified under § 1048.625, the standards of this section apply to emissions measured using the specified test fuel. You must meet the numerical emission standards for hydrocarbons in this section based on the following types of hydrocarbon emissions for engines powered by the following fuels:

(1) Gasoline- and LPG-fueled engines: THC emissions.

(2) Natural gas-fueled engines: NMHC emissions.

(3) Alcohol-fueled engines: THCE emissions.

* * * * *

(g) *Useful life.* Your engines must meet the exhaust emission standards in paragraphs (a) through (c) of this section over their full useful life. For severe-duty engines, the minimum useful life is 1,500 hours of operation or seven years, whichever comes first. For all other engines, the minimum useful life is 5,000 hours of operation or seven years, whichever comes first.

(1) Specify a longer useful life in hours for an engine family under either of two conditions:

(i) If you design, advertise, or market your engine to operate longer than the minimum useful life (your recommended hours until rebuild may indicate a longer design life).

(ii) If your basic mechanical warranty is longer than the minimum useful life.

(2) You may request in your application for certification that we approve a shorter useful life for an engine family. We may approve a shorter useful life, in hours of engine operation but not in years, if we determine that these engines will rarely operate longer than the shorter useful life. If engines identical to those in the engine family have already been produced and are in use, your demonstration must include documentation from such in-use engines. In other cases, your demonstration must include an engineering analysis of information equivalent to such in-use data, such as data from research engines or similar engine models that are already in production. Your demonstration must also include any overhaul interval that you recommend, any mechanical warranty that you offer for the engine or its components, and any relevant customer design specifications. Your demonstration may include any other relevant information. The useful life value may not be shorter than any of the following:

(i) 1,000 hours of operation.

(ii) Your recommended overhaul interval.

(iii) Your mechanical warranty for the engine.

(h) *Applicability for testing.* The emission standards in this subpart apply to all testing, including certification, production-line, and in-use testing. For production-line testing, you must perform duty-cycle testing as specified in §§ 1048.505 and 1048.510. The field-testing standards of this section apply for those tests. You need not do additional testing of production-line engines to show that your engines meet the field-testing standards.

■ 219. Section 1048.105 is amended by revising the section heading and adding introductory text to read as follows:

§ 1048.105 What evaporative emission standards and requirements apply?

The requirements of this section apply to all engines that are subject to this part, except auxiliary marine engines.

* * * * *

■ 220. Section 1048.115 is amended by removing and reserving paragraph (d) and revising the introductory text and paragraphs (a), (b), (e), and (g) to read as follows:

§ 1048.115 What other requirements must my engines meet?

Engines subject to this part must meet the following requirements:

(a) *Crankcase emissions.* Crankcase emissions may not be discharged directly into the ambient atmosphere from any engine throughout its useful life, except as follows:

(1) Engines may discharge crankcase emissions to the ambient atmosphere if the emissions are added to the exhaust emissions (either physically or mathematically) during all emission testing. If you take advantage of this exception, you must do the following things:

(i) Manufacture the engines so that all crankcase emissions can be routed into the applicable sampling systems specified in 40 CFR part 1065.

(ii) Account for deterioration in crankcase emissions when determining exhaust deterioration factors.

(2) For purposes of this paragraph (a), crankcase emissions that are routed to the exhaust upstream of exhaust aftertreatment during all operation are not considered to be discharged directly into the ambient atmosphere.

(b) *Torque broadcasting.* Electronically controlled engines must broadcast their speed and output shaft torque (in newton-meters). Engines may alternatively broadcast a surrogate value for determining torque. Engines must broadcast engine parameters such that they can be read with a remote device, or broadcast them directly to their controller area networks. This information is necessary for testing engines in the field (see § 1048.515). This requirement applies beginning in the 2007 model year. Small-volume engine manufacturers may omit this requirement.

* * * * *

(e) *Adjustable parameters.* Engines that have adjustable parameters must meet all the requirements of this part for any adjustment in the physically adjustable range. An operating parameter is not considered adjustable if you permanently seal it or if it is not normally accessible using ordinary tools. We may require that you set adjustable parameters to any specification within the adjustable range during any testing, including certification testing, selective enforcement auditing, or in-use testing.

* * * * *

(g) *Defeat devices.* You may not equip your engines with a defeat device. A defeat device is an auxiliary emission-control device that reduces the effectiveness of emission controls under conditions that the engine may reasonably be expected to encounter during normal operation and use. This does not apply to auxiliary-emission control devices you identify in your certification application if any of the following is true:

(1) The conditions of concern were substantially included in the applicable test procedures described in subpart F of this part.

(2) You show your design is necessary to prevent engine (or equipment) damage or accidents.

(3) The reduced effectiveness applies only to starting the engine.

■ 221. Section 1048.120 is revised to read as follows:

§ 1048.120 What emission-related warranty requirements apply to me?

(a) *General requirements.* You must warrant to the ultimate purchaser and each subsequent purchaser that the new nonroad engine, including all parts of its emission-control system, meets two conditions:

(1) It is designed, built, and equipped so it conforms at the time of sale to the ultimate purchaser with the requirements of this part.

(2) It is free from defects in materials and workmanship that may keep it from meeting these requirements.

(b) *Warranty period.* Your emission-related warranty must be valid for at least 50 percent of the engine's useful life in hours of operation or at least three years, whichever comes first. In the case of a high-cost warranted part, the warranty must be valid for at least 70 percent of the engine's useful life in hours of operation or at least five years, whichever comes first. You may offer an emission-related warranty more generous than we require. The emission-related warranty for the engine may not be shorter than any published warranty you offer without charge for the engine. Similarly, the emission-related warranty for any component may not be shorter than any published warranty you offer without charge for that component. If an engine has no hour meter, we base the warranty periods in this paragraph (b) only on the engine's age (in years). The warranty period begins when the engine is placed into service.

(c) *Components covered.* The emission-related warranty covers all components whose failure would increase an engine's emissions of any pollutant. This includes components listed in 40 CFR part 1068, Appendix I, and components from any other system you develop to control emissions. The emission-related warranty covers these components even if another company produces the component. Your emission-related warranty does not cover components whose failure would not increase an engine's emissions of any pollutant.

(d) *Limited applicability.* You may deny warranty claims under this section if the operator caused the problem through improper maintenance or use, as described in 40 CFR 1068.115.

(e) *Owners manual.* Describe in the owners manual the emission-related warranty provisions from this section that apply to the engine.

■ 222. Section 1048.125 is revised to read as follows:

§ 1048.125 What maintenance instructions must I give to buyers?

Give the ultimate purchaser of each new nonroad engine written instructions for properly maintaining and using the engine, including the emission-control system. The maintenance instructions also apply to service accumulation on your emission-data engines, as described in 40 CFR part 1065.

(a) *Critical emission-related maintenance.* Critical emission-related maintenance includes any adjustment, cleaning, repair, or replacement of critical emission-related components. This may also include additional emission-related maintenance that you determine is critical if we approve it in advance. You may schedule critical emission-related maintenance on these components if you meet the following conditions:

(1) You demonstrate that the maintenance is reasonably likely to be done at the recommended intervals on in-use engines. We will accept scheduled maintenance as reasonably likely to occur if you satisfy any of the following conditions:

(i) You present data showing that, if a lack of maintenance increases emissions, it also unacceptably degrades the engine's performance.

(ii) You present survey data showing that at least 80 percent of engines in the field get the maintenance you specify at the recommended intervals.

(iii) You provide the maintenance free of charge and clearly say so in maintenance instructions for the customer.

(iv) You otherwise show us that the maintenance is reasonably likely to be done at the recommended intervals.

(2) You may not schedule critical emission-related maintenance more frequently than the following minimum intervals, except as specified in paragraphs (a)(3),

(b) and (c) of this section:

(i) For catalysts, fuel injectors, electronic control units, superchargers, and turbochargers: The useful life of the engine family.

(ii) For gaseous fuel-system components (cleaning without disassembly only) and oxygen sensors: 2,500 hours.

(3) If your engine family has an alternate useful life under § 1048.101(g) that is shorter than the period specified in paragraph (a)(2)(ii) of this section, you may not schedule critical emission-related maintenance more frequently than the alternate useful life, except as specified in paragraph (c) of this section.

(b) *Recommended additional maintenance.* You may recommend any additional amount of maintenance on the components listed in paragraph (a) of this section, as long as you state clearly that these maintenance steps are not necessary to keep the emission-related warranty valid. If operators do the maintenance specified in paragraph (a) of this section, but not the recommended additional maintenance, this does not allow you to disqualify those engines from in-use testing or deny a warranty claim. Do not take these maintenance steps during service accumulation on your emission-data engines.

(c) *Special maintenance.* You may specify more frequent maintenance to address problems related to special situations, such as substandard fuel or atypical engine operation. For example, you may specify more frequent cleaning of fuel system components for engines you have reason to believe will be using fuel that causes substantially more engine performance problems than commercial fuels of the same type that are generally available across the United States. You must clearly state that this additional maintenance is associated with the special situation you are addressing.

(d) *Noncritical emission-related maintenance.* You may schedule any amount of emission-related inspection or maintenance that is not covered by paragraph (a) of this section, as long as you state in the owners manual that these steps are not necessary to keep the emission-related warranty valid. If operators fail to do this maintenance, this does not allow you to disqualify those engines from in-use testing or deny a warranty claim. Do not take these inspection or maintenance steps during service accumulation on your emission-data engines.

(e) *Maintenance that is not emission-related.* For maintenance unrelated to emission controls, you may schedule any amount of inspection or maintenance. You may also take these inspection or maintenance steps during service accumulation on your emission-data engines, as long as they are reasonable and technologically necessary. This might include adding engine oil, changing air, fuel, or oil filters, servicing engine-cooling systems, and adjusting idle speed, governor, engine bolt torque, valve lash, or injector lash. You may perform this nonemission-related maintenance on emission-data engines at the least frequent intervals that you recommend to the ultimate purchaser (but not the intervals recommended for severe service).

(f) *Source of parts and repairs.* State clearly on the first page of your written maintenance instructions that a repair shop or person of the owner's choosing may maintain, replace, or repair emission-control devices and systems. Your instructions may not require components or service identified by brand, trade, or corporate name. Also, do not directly or indirectly condition your warranty on a requirement that the engine be serviced by your franchised dealers or any other service establishments with which you have a commercial relationship. You may disregard the requirements in this paragraph (f) if you do one of two things:

(1) Provide a component or service without charge under the purchase agreement.

(2) Get us to waive this prohibition in the public's interest by convincing us the engine will work properly only with the identified component or service.

(g) *Payment for scheduled maintenance.* Owners are responsible for properly maintaining their engines. This generally includes paying for scheduled maintenance. However, manufacturers must pay for scheduled maintenance during the useful life if it meets all the following criteria:

(1) Each affected component was not in general use on similar engines before January 1, 2004.

(2) The primary function of each affected component is to reduce emissions.

(3) The cost of the scheduled maintenance is more than 2 percent of the price of the engine.

(4) Failure to perform the maintenance would not cause clear problems that would significantly degrade the engine's performance.

(h) *Owners manual.* Explain the owner's responsibility for proper maintenance in the owners manual.

■ 223. Section 1048.130 is amended by revising paragraphs (a), (b)(3), (b)(7), and (b)(8); and adding paragraph (d) to read as follows:

§ 1048.130 What installation instructions must I give to equipment manufacturers?

(a) If you sell an engine for someone else to install in a piece of nonroad equipment, give the engine installer instructions for installing it consistent with the requirements of this part. Include all information necessary to ensure that an engine will be installed in its certified configuration.

(b) * * *

(3) Describe the instructions needed to properly install the exhaust system and any other components. Include instructions consistent with the requirements of § 1048.205(v).

* * * * *

(7) Describe any other instructions to make sure the installed engine will operate according to design specifications in your application for certification. This may include, for example, instructions for installing aftertreatment devices when installing the engines.

(8) State: ''If you install the engine in a way that makes the engine's emission control information label hard to read during normal engine maintenance, you must place a duplicate label on the equipment, as described in 40 CFR 1068.105.''.

* * * * *

(d) Provide instructions in writing or in an equivalent format. For example, you may post instructions on a publicly available Web site for downloading or printing. If you do not provide the instructions in writing, explain in your application for certification how you will ensure that each installer is informed of the installation requirements.

■ 224. Section 1048.135 is revised to read as follows:

§ 1048.135 How must I label and identify the engines I produce?

(a) Assign each engine a unique identification number and permanently affix, engrave, or stamp it on the engine in a legible way.

(b) At the time of manufacture, affix a permanent and legible label identifying each engine. The label must be—

(1) Attached in one piece so it is not removable without being destroyed or defaced.

(2) Secured to a part of the engine needed for normal operation and not normally requiring replacement.

(3) Durable and readable for the engine's entire life.

(4) Written in English.

(c) The label must—

(1) Include the heading ''EMISSION CONTROL INFORMATION''.

(2) Include your full corporate name and trademark. You may identify another company and use its trademark instead of yours if you comply with the provisions of § 1048.635.

(3) Include EPA's standardized designation for the engine family (and subfamily, where applicable).

(4) State the engine's displacement (in liters); however, you may omit this from the label if all the engines in the engine family have the same per-cylinder displacement and total displacement.

(5) State the date of manufacture [MONTH and YEAR]. You may omit this from the label if you keep a record of the engine-manufacture dates and provide it to us upon request.

(6) Identify the emission-control system. Use terms and abbreviations consistent with SAE J1930 (incorporated by reference in § 1048.810). You may omit this information from the label if there is not enough room for it and you put it in the owners manual instead.

(7) State: ''THIS ENGINE IS CERTIFIED TO OPERATE ON [specify operating fuel or fuels].''.

(8) Identify any requirements for fuel and lubricants. You may omit this information from the label if there is not enough room for it and you put it in the owners manual instead.

(9) List specifications and adjustments for engine tuneups; show the proper position for the transmission during tuneup and state which accessories should be operating. You may omit this information from the label if there is not enough room for it and you put it in the owners manual instead.

(10) State the useful life for your engine family if it has a longer useful life under § 1048.101(g)(1) or a shortened useful life under § 1048.101(g)(2).

(11) Identify the emission standards to which you have certified the engine.

(12) State: ''THIS ENGINE COMPLIES WITH U.S. EPA REGULATIONS FOR [MODEL YEAR] LARGE NONROAD SI ENGINES.''.

(13) If your engines are certified only for constant-speed operation, state: ''USE IN CONSTANT–SPEED APPLICATIONS ONLY''.

(14) If your engines are certified only for variable-speed operation, state: ''USE IN VARIABLE–SPEED APPLICATIONS ONLY''.

(15) If your engines are certified only for high-load engines, state: ''THIS ENGINE IS NOT INTENDED FOR OPERATION AT LESS THAN 75 PERCENT OF FULL LOAD.''.

(16) If you certify your engines under § 1048.101(d) (and show in your application for certification that in-use engines will experience infrequent high-load operation), state: ''THIS ENGINE IS NOT INTENDED FOR OPERATION AT MORE THAN__PERCENT OF FULL LOAD.''. Specify the appropriate percentage of full load based on the nature of the engine protection. You may add other statements to discourage operation in engine-protection modes.

(17) If your engines are certified to the voluntary standards in § 1048.140, state: ''BLUE SKY SERIES''.

(d) You may add information to the emission control information label to identify other emission standards that the engine meets or does not meet (such

as California standards). You may also add other information to ensure that the engine will be properly maintained and used.

(e) You may ask us to approve modified labeling requirements in this part 1048 if you show that it is necessary or appropriate. We will approve your request if your alternate label is consistent with the requirements of this part.

(f) If you obscure the engine label while installing the engine in the equipment such that the label will be hard to read during normal maintenance, you must place a duplicate label on the equipment. If others install your engine in their equipment in a way that obscures the engine label, we require them to add a duplicate label on the equipment (see 40 CFR 1068.105); in that case, give them the number of duplicate labels they request and keep the following records for at least five years:

(1) Written documentation of the request from the equipment manufacturer.

(2) The number of duplicate labels you send and the date you sent them.

■ 225. Section 1048.140 is amended by revising paragraph (c) to read as follows:

§ 1048.140 What are the provisions for certifying Blue Sky Series engines?

* * * * *

(c) For any model year, to receive a certificate of conformity as a ''Blue Sky Series'' engine family must meet all the requirements in this part while certifying to one of the sets of exhaust emission standards in the following table:

TABLE 1 OF § 1048.140.—LONG-TERM STANDARDS FOR BLUE SKY SERIES ENGINES (G/KW-HR)

Standards for steady-state and transient test procedures		Standards for field-testing procedures	
$HC+NO_X$	CO	$HC+NO_X$	CO
0.80	4.4	1.10	6.6
0.60	4.4	0.84	6.6
0.40	4.4	0.56	6.6
0.20	4.4	0.28	6.6
0.10	4.4	0.14	6.6

* * * * *

■ 226. Section 1048.145 is amended by revising the section heading and paragraph (a) and removing and reserving paragraph(c) to read as follows:

§ 1048.145 Are there interim provisions that apply only for a limited time?

* * * * *

(a) *Family banking.* This paragraph (a) allows you to reduce the number of engines subject to the Tier 2 standards by certifying some of your engines earlier than otherwise required, as follows:

(1) For early-compliant engines to generate offsets under this paragraph (a), you must meet the following general provisions:

(i) You must begin actual production of early-compliant engines by September 1, 2006.

(ii) Engines you produce after December 31, 2006 may not generate offsets.

(iii) Offset-generating engines must be certified to the Tier 2 standards and requirements under this part 1048.

(iv) If you certify engines under the voluntary standards of § 1048.140, you may not use them in your calculation under this paragraph (a).

(2) For every offset-generating engine certified to the Tier 2 standards, you may reduce the number of engines with the same maximum engine power that are required to meet the Tier 2 standards in later model years by one engine. You may calculate power-weighted offsets based on actual U.S.-directed sales volumes. For example, if you produce a total of 1,000 engines in 2005 and 2006 with an average maximum power of 60 kW certified to the Tier 2 standards, you may delay certification to that tier of standards for up to 60,000 kW-engine-years in any of the following ways:

(i) Delay certification of up to 600 engines with an average maximum power of 100 kW for one model year.

(ii) Delay certification of up to 200 engines with an average maximum power of 100 kW for three consecutive model years.

(iii) Delay certification of up to 400 engines with an average maximum power of 100 kW for one model year and up to 50 engines with an average maximum power of 200 kW for two model years.

(3) Offset-using engines (that is, those not required to certify to the Tier 2 standards) must be certified to the Tier 1 standards and requirements of this part 1048. You may delay compliance for up to three model years.

(4) By January 31 of each year in which you use the provisions of this paragraph (a), send us a report describing how many offset-generating or offset-using engines you produced in the preceding model year.

* * * * *

■ 227. Section 1048.201 is revised to read as follows:

§ 1048.201 What are the general requirements for obtaining a certificate of conformity?

(a) You must send us a separate application for a certificate of conformity for each engine family. A certificate of conformity is valid from the indicated effective date untilDecember 31 of the model year for which it is issued.

(b) The application must contain all the information required by this part and must not include false or incomplete statements or information (see § 1048.255).

(c) We may ask you to include less information than we specify in this subpart, as long as you maintain all the information required by § 1048.250.

(d) You must use good engineering judgment for all decisions related to your application (see 40 CFR 1068.5).

(e) An authorized representative of your company must approve and sign the application.

(f) See § 1048.255 for provisions describing how we will process your application.

(g) We may require you to deliver your test engines to a facility we designate for our testing (see § 1048.235(c)).

■ 228. Section 1048.205 is revised to read as follows:

§ 1048.205 What must I include in my application?

This section specifies the information that must be in your application, unless we ask you to include less information under § 1048.201(c). We may require you to provide additional information to evaluate your application.

(a) Describe the engine family's specifications and other basic parameters of the engine's design and emission controls. List the fuel types on

which your engines are designed to operate (for example, gasoline and natural gas). List each distinguishable engine configuration in the engine family.

(b) Explain how the emission-control system operates. Describe in detail all system components for controlling exhaust emissions, including all auxiliary-emission control devices (AECDs) and all fuel-system components you will install on any production or test engine. Describe the evaporative emission controls. Identify the part number of each component you describe. For this paragraph (b), treat as separate AECDs any devices that modulate or activate differently from each other. Include all the following:

(1) Give a general overview of the engine, the emission-control strategies, and all AECDs.

(2) Describe each AECD's general purpose and function.

(3) Identify the parameters that each AECD senses (including measuring, estimating, calculating, or empirically deriving the values). Include equipment-based parameters and state whether you simulate them during testing with the applicable procedures.

(4) Describe the purpose for sensing each parameter.

(5) Identify the location of each sensor the AECD uses.

(6) Identify the threshold values for the sensed parameters that activate the AECD.

(7) Describe the parameters that the AECD modulates (controls) in response to any sensed parameters, including the range of modulation for each parameter, the relationship between the sensed parameters and the controlled parameters and how the modulation achieves the AECD's stated purpose. Use graphs and tables, as necessary.

(8) Describe each AECD's specific calibration details. This may be in the form of data tables, graphical representations, or some other description.

(9) Describe the hierarchy among the AECDs when multiple AECDs sense or modulate the same parameter. Describe whether the strategies interact in a comparative or additive manner and identify which AECD takes precedence in responding, if applicable.

(10) Explain the extent to which the AECD is included in the applicable test procedures specified in subpart F of this part.

(11) Do the following additional things for AECDs designed to protect engines or equipment:

(i) Identify the engine and/or equipment design limits that make protection necessary and describe any damage that would occur without the AECD.

(ii) Describe how each sensed parameter relates to the protected components' design limits or those operating conditions that cause the need for protection.

(iii) Describe the relationship between the design limits/parameters being protected and the parameters sensed or calculated as surrogates for those design limits/parameters, if applicable.

(iv) Describe how the modulation by the AECD prevents engines and/or equipment from exceeding design limits.

(v) Explain why it is necessary to estimate any parameters instead of measuring them directly and describe how the AECD calculates the estimated value, if applicable.

(vi) Describe how you calibrate the AECD modulation to activate only during conditions related to the stated need to protect components and only as needed to sufficiently protect those components in a way that minimizes the emission impact.

(c) Explain how the engine diagnostic system works, describing especially the engine conditions (with the corresponding diagnostic trouble codes) that cause the malfunction-indicator light to go on. Propose what you consider to be extreme conditions under which the diagnostic system should disregard trouble codes, as described in § 1048.110.

(d) Describe the engines you selected for testing and the reasons for selecting them.

(e) Describe the test equipment and procedures that you used, including any special or alternate test procedures you used (see § 1048.501).

(f) Describe how you operated the emission-data engine before testing, including the duty cycle and the number of engine operating hours used to stabilize emission levels. Explain why you selected the method of service accumulation. Describe any scheduled maintenance you did.

(g) List the specifications of each test fuel to show that it falls within the required ranges we specify in 40 CFR part 1065, subpart H.

(h) Identify the engine family's useful life.

(i) Include the maintenance instructions you will give to the ultimate purchaser of each new nonroad engine (see § 1048.125).

(j) Include the emission-related installation instructions you will provide if someone else installs your engines in a piece of nonroad equipment (see § 1048.130).

(k) Identify each high-cost warranted part and show us how you calculated its replacement cost, including the estimated retail cost of the part, labor rates, and labor hours to diagnose and replace defective parts.

(l) Describe your emission control information label (see § 1048.135).

(m) Identify the emission standards to which you are certifying engines in the engine family.

(n) Identify the engine family's deterioration factors and describe how you developed them (see § 1048.240). Present any emission test data you used for this.

(o) State that you operated your emission-data engines as described in the application(including the test procedures, test parameters, and test fuels) to show you meet the requirements of this part.

(p) Present emission data to show that you meet emission standards, as follows:

(1) Present exhaust emission data for HC, NO_X, and CO on an emission-data engine to show your engines meet the applicable duty-cycle emission standards we specify in § 1048.101. Show emission figures before and after applying adjustment factors for deterioration factors for each engine. Include test data for each type of fuel from 40 CFR part 1065, subpart H, on which you intend for engines in the engine family to operate (for example, gasoline, liquefied petroleum gas, methanol, or natural gas). If we specify more than one grade of any fuel type (for example, a summer grade and winter grade of gasoline), you only need to submit test data for one grade, unless the regulations of this part specify otherwise for your engine. Note that § 1048.235 allows you to submit an application in certain cases without new emission data.

(2) If your engine family includes a volatile liquid fuel (and you do not use design-based certification under § 1048.245), present evaporative test data to show your vehicles meet the evaporative emission standards we specify in subpart B of this part. Show these figures before and after applying deterioration factors, where applicable.

(q) State that all the engines in the engine family comply with the field-testing emission standards we specify in § 1048.104 for all normal operation and use when tested as specified in § 1048.515. Describe any relevant testing, engineering analysis, or other information in sufficient detail to support your statement.

(r) For engines with maximum engine power above 560 kW, include information showing how your emission

controls will function during normal in-use transient operation. For example, this might include the following:

(1) Emission data from transient testing of engines using measurement systems designed for measuring in-use emissions.

(2) Comparison of the engine design for controlling transient emissions with that from engines for which you have emission data over the transient duty cycle for certification.

(3) Detailed descriptions of control algorithms and other design parameters for controlling transient emissions.

(s) Report all test results, including those from invalid tests or from any other tests, whether or not they were conducted according to the test procedures of subpart F of this part. If you measure CO_2, report those emission levels. We may ask you to send other information to confirm that your tests were valid under the requirements of this part and 40 CFR part 1065.

(t) Describe all adjustable operating parameters (see § 1048.115(e)), including production tolerances. Include the following in your description of each parameter:

(1) The nominal or recommended setting.

(2) The intended physically adjustable range.

(3) The limits or stops used to establish adjustable ranges.

(4) Information showing why the limits, stops, or other means of inhibiting adjustment are effective in preventing adjustment of parameters on in-use engines to settings outside your intended physically adjustable ranges.

(u) Provide the information to read, record, and interpret all the information broadcast by an engine's onboard computers and electronic control units. State that, upon request, you will give us any hardware, software, or tools we would need to do this. If you broadcast a surrogate parameter for torque values, you must provide us what we need to convert these into torque units. You may reference any appropriate publicly released standards that define conventions for these messages and parameters. Format your information consistent with publicly released standards.

(v) Confirm that your emission-related installation instructions specify how to ensure that sampling of exhaust emissions will be possible after engines are installed in equipment and placed in service. If this cannot be done by simply adding a 20-centimeter extension to the exhaust pipe, show how to sample exhaust emissions in a way that prevents diluting the exhaust sample with ambient air.

(w) State whether your engine will operate in variable-speed applications, constant-speed applications, or both. If your certification covers only constant-speed or only variable-speed applications, describe how you will prevent use of these engines in applications for which they are not certified.

(x) Unconditionally certify that all the engines in the engine family comply with the requirements of this part, other referenced parts of the CFR, and the Clean Air Act.

(y) Include estimates of U.S.-directed production volumes.

(z) Include other applicable information, such as information specified in this part or part 1068 of this chapter related to requests for exemptions.

(aa) Name an agent for service of process located in the United States. Service on this agent constitutes service on you or any of your officers or employees for any action by EPA or otherwise by the United States related to the requirements of this part.

■ 229. Section 1048.210 is revised to read as follows:

§ 1048.210 May I get preliminary approval before I complete my application?

If you send us information before you finish the application, we will review it and make any appropriate determinations, especially for questions related to engine family definitions, auxiliary emission-control devices, deterioration factors, testing for service accumulation, and maintenance. Decisions made under this section are considered to be preliminary approval, subject to final review and approval. We will generally not reverse a decision where we have given you preliminary approval, unless we find new information supporting a different decision. If you request preliminary approval related to the upcoming model year or the model year after that, we will make best-efforts to make the appropriate determinations as soon as practicable. We will generally not provide preliminary approval related to a future model year more than two years ahead of time.

§ 1048.215 [Removed]

■ 230. Section 1048.215 is removed.

■ 231. Section 1048.220 is revised to read as follows:

§ 1048.220 How do I amend the maintenance instructions in my application?

You may amend your emission-related maintenance instructions after you submit your application for certification, as long as the amended instructions remain consistent with the provisions of § 1048.125. You must send the Designated Compliance Officer a request to amend your application for certification for an engine family if you want to change the emission-related maintenance instructions in a way that could affect emissions. In your request, describe the proposed changes to the maintenance instructions. We will disapprove your request if we determine that the amended instructions are inconsistent with maintenance you performed on emission-data engines.

(a) If you are decreasing the specified maintenance, you may distribute the new maintenance instructions to your customers 30 days after we receive your request, unless we disapprove your request. We may approve a shorter time or waive this requirement.

(b) If your requested change would not decrease the specified maintenance, you may distribute the new maintenance instructions anytime after you send your request. For example, this paragraph (b) would cover adding instructions to increase the frequency of a maintenance step for engines in severe-duty applications.

(c) You need not request approval if you are making only minor corrections (such as correcting typographical mistakes), clarifying your maintenance instructions, or changing instructions for maintenance unrelated to emission control.

■ 232. Section 1048.225 is revised to read as follows:

§ 1048.225 How do I amend my application for certification to include new or modified engines?

Before we issue you a certificate of conformity, you may amend your application to include new or modified engine configurations, subject to the provisions of this section. After we have issued your certificate of conformity, you may send us an amended application requesting that we include new or modified engine configurations within the scope of the certificate, subject to the provisions of this section. You must amend your application if any changes occur with respect to any information included in your application.

(a) You must amend your application before you take either of the following actions:

(1) Add an engine (that is, an additional engine configuration) to an engine family. In this case, the engine added must be consistent with other engines in the engine family with respect to the criteria listed in § 1048.230.

(2) Change an engine already included in an engine family in a way that may affect emissions, or change any of the components you described in your application for certification. This includes production and design changes that may affect emissions any time during the engine's lifetime.

(b) To amend your application for certification, send the Designated Compliance Officer the following information:

(1) Describe in detail the addition or change in the engine model or configuration you intend to make.

(2) Include engineering evaluations or data showing that the amended engine family complies with all applicable requirements. You may do this by showing that the original emission-data engine is still appropriate with respect to showing compliance of the amended family with all applicable requirements.

(3) If the original emission-data engine for the engine family is not appropriate to show compliance for the new or modified nonroad engine, include new test data showing that the new or modified nonroad engine meets the requirements of this part.

(c) We may ask for more test data or engineering evaluations. You must give us these within 30 days after we request them.

(d) For engine families already covered by a certificate of conformity, we will determine whether the existing certificate of conformity covers your new or modified nonroad engine. You may ask for a hearing if we deny your request (see § 1048.820).

(e) For engine families already covered by a certificate of conformity, you may start producing the new or modified nonroad engine anytime after you send us your amended application, before we make a decision under paragraph (d) of this section. However, if we determine that the affected engines do not meet applicable requirements, we will notify you to cease production of the engines and may require you to recall the engines at no expense to the owner. Choosing to produce engines under this paragraph (e) is deemed to be consent to recall all engines that we determine do not meet applicable emission standards or other requirements and to remedy the nonconformity at no expense to the owner. If you do not provide information required under paragraph (c) of this section within 30 days, you must stop producing the new or modified nonroad engines.

■ 233. Section 1048.230 is revised to read as follows:

§ 1048.230 How do I select engine families?

(a) Divide your product line into families of engines that are expected to have similar emission characteristics throughout the useful life. Your engine family is limited to a single model year.

(b) Group engines in the same engine family if they are the same in all of the following aspects:

(1) The combustion cycle.

(2) The cooling system (water-cooled vs. air-cooled).

(3) Configuration of the fuel system (for example, fuel injection vs. carburetion).

(4) Method of air aspiration.

(5) The number, location, volume, and composition of catalytic converters.

(6) The number, arrangement, and approximate bore diameter of cylinders.

(7) Evaporative emission controls.

(c) You may subdivide a group of engines that is identical under paragraph (b) of this section into different engine families if you show the expected emission characteristics are different during the useful life.

(d) You may group engines that are not identical with respect to the things listed in paragraph (b) of this section in the same engine family if you show that their emission characteristics during the useful life will be similar.

(e) You may create separate families for exhaust emissions and evaporative emissions. If we do this, list both families on the emission control information label.

(f) Where necessary, you may divide an engine family into sub-families to meet different emission standards, as specified in § 1048.101(a)(2). For issues related to compliance and prohibited actions, we will generally apply decisions to the whole engine family. For engine labels and other administrative provisions, we may approve your request for separate treatment of sub-families.

■ 234. Section 1048.235 is revised to read as follows:

§ 1048.235 What emission testing must I perform for my application for a certificate of conformity?

This section describes the emission testing you must perform to show compliance with the emission standards in §§ 1048.101(a) and (b) and 1048.105 during certification. See § 1048.205(q) regarding emission testing related to the field-testing standards. See § 1048.240 and 40 CFR part 1065, subpart E, regarding service accumulation before emission testing.

(a) Test your emission-data engines using the procedures and equipment specified in subpart F of this part. For any testing related to evaporative emissions, use good engineering judgment to include a complete fuel system with the engine.

(b) Select emission-data engines according to the following criteria:

(1) *Exhaust testing.* For each fuel type from each engine family, select an emission-data engine with a configuration that is most likely to exceed the exhaust emission standards, using good engineering judgment. Consider the emission levels of all exhaust constituents over the full useful life of the engine when operated in a piece of equipment.

(2) *Evaporative testing.* For each engine family that includes a volatile liquid fuel, select a test fuel system with a configuration that is most likely to exceed the evaporative emission standards, using good engineering judgment.

(c) We may measure emissions from any of your test engines or other engines from the engine family, as follows:

(1) We may decide to do the testing at your plant or any other facility. If we do this, you must deliver the test engine to a test facility we designate. The test engine you provide must include appropriate manifolds, aftertreatment devices, electronic control units, and other emission-related components not normally attached directly to the engine block. If we do the testing at your plant, you must schedule it as soon as possible and make available the instruments, personnel, and equipment we need.

(2) If we measure emissions on one of your test engines, the results of that testing become the official emission results for the engine. Unless we later invalidate these data, we may decide not to consider your data in determining if your engine family meets applicable requirements.

(3) Before we test one of your engines, we may set its adjustable parameters to any point within the physically adjustable ranges (see § 1048.115(e)).

(4) Before we test one of your engines, we may calibrate it within normal production tolerances for anything we do not consider an adjustable parameter.

(d) You may ask to use emission data from a previous model year instead of doing new tests, but only if all the following are true:

(1) The engine family from the previous model year differs from the current engine family only with respect to model year.

(2) The emission-data engine from the previous model year remains the appropriate emission-data engine under paragraph (b) of this section.

(3) The data show that the emission-data engine would meet all the

requirements that apply to the engine family covered by the application for certification.

(e) We may require you to test a second engine of the same or different configuration in addition to the engine tested under paragraph (b) of this section.

(f) If you use an alternate test procedure under 40 CFR 1065.10 and later testing shows that such testing does not produce results that are equivalent to the procedures specified in subpart F of this part, we may reject data you generated using the alternate procedure.

■ 235. Section 1048.240 is revised to read as follows:

§ 1048.240 How do I demonstrate that my engine family complies with exhaust emission standards?

(a) For purposes of certification, your engine family is considered in compliance with the applicable numerical emission standards in § 1048.101(a) and (b) if all emission-data engines representing that family have test results showing deteriorated emission levels at or below these standards.

(b) Your engine family is deemed not to comply if any emission-data engine representing that family has test results showing a deteriorated emission level above an applicable emission standard from § 1048.101 for any pollutant.

(c) To compare emission levels from the emission-data engine with the applicable emission standards, apply deterioration factors to the measured emission levels for each pollutant. Specify the deterioration factors based on emission measurements using four significant figures, consistent with good engineering judgment. For example, your deterioration factors must take into account any available data from in-use testing with similar engines (see subpart E of this part). Small-volume engine manufacturers may use assigned deterioration factors that we establish. Apply deterioration factors as follows:

(1) *Multiplicative deterioration factor.* For engines that use aftertreatment technology, such as catalytic converters, use a multiplicative deterioration factor for exhaust emissions. A multiplicative deterioration factor is the ratio of exhaust emissions at the end of useful life to exhaust emissions at the low-hour test point. Adjust the official emission results for each tested engine at the selected test point by multiplying the measured emissions by the deterioration factor. If the factor is less than one, use one.

(2) *Additive deterioration factor.* For engines that do not use aftertreatment technology, use an additive deterioration factor for exhaust emissions. An additive deterioration factor is the difference between exhaust emissions at the end of useful life and exhaust emissions at the low-hour test point. Adjust the official emission results for each tested engine at the selected test point by adding the factor to the measured emissions. If the factor is less than zero, use zero.

(d) Collect emission data using measurements to one more decimal place than the applicable standard. Apply the deterioration factor to the official emission result, as described in paragraph (c) of this section, then round the adjusted figure to the same number of decimal places as the emission standard. Compare the rounded emission levels to the emission standard for each emission-data engine. In the case of HC + NO_X standards, apply the deterioration factor to each pollutant and then add the results before rounding.

■ 236. Section 1048.245 is amended by revising paragraph (e)(1)(i) to read as follows:

§ 1048.245 How do I demonstrate that my engine family complies with evaporative emission standards?

* * * * *

(e) * * *

(1) * * *

(i) Use a tethered or self-closing gas cap on a fuel tank that stays sealed up to a positive pressure of 24.5 kPa (3.5 psig) or a vacuum pressure of 0.7 kPa (0.1 psig).

* * * * *

■ 237. Section 1048.250 is amended by revising paragraphs (a) and (c) to read as follows:

§ 1048.250 What records must I keep and make available to EPA?

(a) Organize and maintain the following records:

(1) A copy of all applications and any summary information you send us.

(2) Any of the information we specify in § 1048.205 that you were not required to include in your application.

(3) A detailed history of each emission-data engine. For each engine, describe all of the following:

(i) The emission-data engine's construction, including its origin and buildup, steps you took to ensure that it represents production engines, any components you built specially for it, and all the components you include in your application for certification.

(ii) How you accumulated engine operating hours (service accumulation), including the dates and the number of hours accumulated.

(iii) All maintenance, including modifications, parts changes, and other service, and the dates and reasons for the maintenance.

(iv) All your emission tests, including documentation on routine and standard tests, as specified in part 40 CFR part 1065, and the date and purpose of each test.

(v) All tests to diagnose engine or emission-control performance, giving the date and time of each and the reasons for the test.

(vi) Any other significant events.

(4) Production figures for each engine family divided by assembly plant.

(5) Keep a list of engine identification numbers for all the engines you produce under each certificate of conformity.

* * * * *

(c) Store these records in any format and on any media, as long as you can promptly send us organized, written records in English if we ask for them. You must keep these records readily available. We may review them at any time.

* * * * *

■ 238. Section 1048.255 is revised to read as follows:

§ 1048.255 When may EPA deny, revoke, or void my certificate of conformity?

(a) If we determine your application is complete and shows that the engine family meets all the requirements of this part and the Act, we will issue a certificate of conformity for your engine family for that model year. We may make the approval subject to additional conditions.

(b) We may deny your application for certification if we determine that your engine family fails to comply with emission standards or other requirements of this part or the Act. Our decision may be based on a review of all information available to us. If we deny your application, we will explain why in writing.

(c) In addition, we may deny your application or suspend or revoke your certificate if you do any of the following:

(1) Refuse to comply with any testing or reporting requirements.

(2) Submit false or incomplete information (paragraph (e) of this section applies if this is fraudulent).

(3) Render inaccurate any test data.

(4) Deny us from completing authorized activities despite our presenting a warrant or court order (see 40 CFR 1068.20). This includes a failure to provide reasonable assistance.

(5) Produce engines for importation into the United States at a location where local law prohibits us from carrying out authorized activities.

(6) Fail to supply requested information or amend your application to include all engines being produced.

(7) Take any action that otherwise circumvents the intent of the Act or this part.

(d) We may void your certificate if you do not keep the records we require or do not give us information when we ask for it.

(e) We may void your certificate if we find that you intentionally submitted false or incomplete information.

(f) If we deny your application or suspend, revoke, or void your certificate, you may ask for a hearing (see § 1048.820).

■ 239. Section 1048.301 is amended by revising paragraphs (a) and (f) to read as follows:

§ 1048.301 When must I test my production-line engines?

(a) If you produce engines that are subject to the requirements of this part, you must test them as described in this subpart.

* * * * *

(f) We may ask you to make a reasonable number of production-line engines available for a reasonable time so we can test or inspect them for compliance with the requirements of this part. See 40 CFR 1068.27.

■ 240. Section 1048.305 is amended by revising paragraphs (d)(1), (f), and (g) to read as follows:

§ 1048.305 How must I prepare and test my production-line engines?

* * * * *

(d) * * *

(1) We may adjust or require you to adjust idle speed outside the physically adjustable range as needed only until the engine has stabilized emission levels (see paragraph (e) of this section). We may ask you for information needed to establish an alternate minimum idle speed.

* * * * *

(f) *Damage during shipment.* If shipping an engine to a remote facility for production-line testing makes necessary an adjustment or repair, you must wait until after the initial emission test to do this work. We may waive this requirement if the test would be impossible or unsafe, or if it would permanently damage the engine. Report to us, in your written report under § 1048.345, all adjustments or repairs you make on test engines before each test.

(g) *Retesting after invalid tests.* You may retest an engine if you determine an emission test is invalid under subpart F of this part. Explain in your written report reasons for invalidating any test and the emission results from all tests. If you retest an engine and, within ten days after testing, ask to substitute results of the new tests for the original ones, we will answer within ten days after we receive your information.

■ 241. Section 1048.310 is amended by revising paragraphs (c) introductory text, (c)(2), (g), (h), and (i) to read as follows:

§ 1048.310 How must I select engines for production-line testing?

* * * * *

(c) Calculate the required sample size for each engine family. Separately calculate this figure for $HC+NO_X$ and for CO. The required sample size is the greater of these two calculated values. Use the following equation:

$$N = \left[\frac{(t_{95} \times \sigma)}{(x - STD)}\right]^2 + 1$$

Where:

N = Required sample size for the model year.

t_{95} = 95% confidence coefficient, which depends on the number of tests completed, n, as specified in the table in paragraph (c)(1) of this section. It defines 95% confidence intervals for a one-tail distribution.

x = Mean of emission test results of the sample.

STD = Emission standard.

σ = Test sample standard deviation (see paragraph (c)(2) of this section).

n = The number of tests completed in an engine family.

* * * * *

(2) Calculate the standard deviation, σ, for the test sample using the following formula:

$$\sigma = \sqrt{\frac{\sum (X_i - x)^2}{n - 1}}$$

Where:

X_i = Emission test result for an individual engine.

* * * * *

(g) Continue testing any engine family for which the sample mean, x, is greater than the emission standard. This applies if the sample mean for either $HC+NO_X$ or for CO is greater than the emission standard. Continue testing until one of the following things happens:

(1) The number of tests completed in an engine family, n, is greater than the required sample size, N, and the sample mean, x, is less than or equal to the emission standard. For example, if N = 3.1 after the third test, the sample-size calculation does not allow you to stop testing.

(2) The engine family does not comply according to § 1048.315.

(3) You test 30 engines from the engine family.

(4) You test one percent of your projected annual U.S.-directed production volume for the engine family, rounded to the nearest whole number. If your projected production is between 150 and 750 engines, test engines as specified in paragraph (b) of this section until you have tested one percent of your projected annual U.S.-directed production volume. For example, if projected volume is 475 engines, test two engines in each of the first two quarters and one engine in the third quarter to fulfill your testing requirements under this section for that engine family. If your projected production volume is less than 150, you must test at least two engines.

(5) You choose to declare that the engine family does not comply with the requirements of this subpart.

(h) If the sample-size calculation allows you to stop testing for a pollutant, you must continue measuring emission levels of that pollutant for any additional tests required under this section. However, you need not continue making the calculations specified in this section for that pollutant. This paragraph (h) does not affect the requirements in § 1048.320.

(i) You may elect to test more randomly chosen engines than we require under this section. Include these engines in the sample-size calculations.

■ 242. Section 1048.315 is amended by revising the introductory text to read as follows:

§ 1048.315 How do I know when my engine family fails the production-line testing requirements?

This section describes the pass/fail criteria for the production-line testing requirements. We apply these criteria on an engine-family basis. See § 1048.320 for the requirements that apply to individual engines that fail a production-line test.

* * * * *

■ 243. Section 1048.325 is amended by revising paragraph (d) to read as follows:

§ 1048.325 What happens if an engine family fails the production-line requirements?

* * * * *

(d) Section 1048.335 specifies steps you must take to remedy the cause of the engine family's production-line failure. All the engines you have produced since the end of the last test period are presumed noncompliant and should be addressed in your proposed remedy. We may require you to apply the remedy to engines produced earlier if we determine that the cause of the

failure is likely to have affected the earlier engines.

■ 244. Section 1048.345 is amended by revising paragraph (d) to read as follows:

§ 1048.345 What production-line testing records must I send to EPA?

* * * * *

(d) Send electronic reports of production-line testing to the Designated ComplianceOfficer using an approved information format. If you want to use a different format, send us a written request with justification for a waiver.

* * * * *

■ 245. Section 1048.350 is amended by revising paragraph (a) to read as follows:

§ 1048.350 What records must I keep?

(a) Organize and maintain your records as described in this section. We may review your records at any time.

* * * * *

■ 246. Section 1048.420 is amended by revising paragraph (b) to read as follows:

§ 1048.420 What in-use testing information must I report to EPA?

* * * * *

(b) Send electronic reports of in-use testing to the Designated Compliance Officer using an approved information format. If you want to use a different format, send us a written request with justification for a waiver.

* * * * *

■ 247. Section 1048.425 is amended by revising paragraph (a) to read as follows:

§ 1048.425 What records must I keep?

(a) Organize and maintain your records as described in this section. We may review your records at any time.

* * * * *

■ 248. Section 1048.501 is revised to read as follows:

§ 1048.501 How do I run a valid emission test?

(a) Use the equipment and procedures for spark-ignition engines in 40 CFR part 1065 to determine whether engines meet the duty-cycle emission standards in § 1048.101(a) and (b). Measure the emissions of all the pollutants we regulate in § 1048.101 using the sampling procedures specified in 40 CFR part 1065. Use the applicable duty cycles specified in §§ 1048.505 and 1048.510.

(b) Section 1048.515 describes the supplemental procedures for evaluating whether engines meet the field-testing emission standards in § 1048.101(c).

(c) Use the fuels specified in 40 CFR part 1065, subpart C, to perform valid tests for all the testing we require in this part, except as noted in § 1048.515. For service accumulation, use the test fuel or any commercially available fuel that is representative of the fuel that in-use engines will use.

(d) In place of the provisions of 40 CFR 1065.405, you may consider emission levels stable without measurement after 50 hours of engine operation.

(e) To test engines for evaporative emissions, use the equipment and procedures specified for testing diurnal emissions in 40 CFR 86.107–96 and 86.133–96 with fuel meeting the specifications in 40 CFR part 1065, subpart C. Measure emissions from a test engine with a complete fuel system. Reported emission levels must be based on the highest emissions from three successive 24-hour periods of cycling temperatures. Note that you may omit testing for evaporative emissions during certification if you certify by design, as specified in § 1048.245.

(f) You may use special or alternate procedures to the extent we allow them under 40 CFR 1065.10.

(g) This subpart is addressed to you as a manufacturer, but it applies equally to anyone who does testing for you, and to us when we perform testing to determine if your engines meet emission standards.

(h) Map all engines (including constant-speed engines) using the procedures specified in 40 CFR part 1065 for variable-speed engines. For constant-speed engines, continue the mapping procedure until you reach the high-idle speed (the highest speed at which the engine produces zero torque).

■ 249. Section 1048.505 is revised to read as follows:

§ 1048.505 How do I test engines using steady-state duty cycles, including ramped-modal testing?

This section describes how to test engines under steady-state conditions. In some cases, we allow you to choose the appropriate steady-state duty cycle for an engine. In these cases, you must use the duty cycle you select in your application for certification for all testing you perform for that engine family. If we test your engines to confirm that they meet emission standards, we will use the duty cycles you select for your own testing. We may also perform other testing as allowed by the Clean Air Act.

(a) You may perform steady-state testing with either discrete-mode or ramped-modal cycles, as follows:

(1) For discrete-mode testing, sample emissions separately for each mode, then calculate an average emission level for the whole cycle using the weighting factors specified for each mode. Calculate cycle statistics for the sequence of modes and compare with the specified values in 40 CFR 1065.514 to confirm that the test is valid. Operate the engine and sampling system as follows:

(i) *Engines with lean NO_X aftertreatment.* For lean-burn engines that depend on aftertreatment to meet the NO_X emission standard, operate the engine for 5–6 minutes, then sample emissions for 1–3 minutes in each mode.

(ii) *Engines without lean NO_X aftertreatment.* For other engines, operate the engine for at least 5 minutes, then sample emissions for at least 1 minute in each mode. Calculate cycle statistics for the sequence of modes and compare with the specified values in 40 CFR part 1065 to confirm that the test is valid.

(2) For ramped-modal testing, start sampling at the beginning of the first mode and continue sampling until the end of the last mode. Calculate emissions and cycle statistics the same as for transient testing.

(b) Measure emissions by testing the engine on a dynamometer with one or more of the following sets of duty cycles to determine whether it meets the steady-state emission standards in § 1048.101(b):

(1) For engines from an engine family that will be used only in variable-speed applications, use one of the following duty cycles:

(i) The following duty cycle applies for discrete-mode testing:

TABLE 1 OF § 1048.505

C2 Mode No.	Engine speed [1]	Observed torque [2]	Minimum time in mode (minutes)	Weighting factors
1	Maximum test speed	25	3.0	0.06
2	Intermediate test speed	100	3.0	0.02
3	Intermediate test speed	75	3.0	0.05

TABLE 1 OF § 1048.505—Continued

C2 Mode No.	Engine speed [1]	Observed torque [2]	Minimum time in mode (minutes)	Weighting factors
4	Intermediate test speed	50	3.0	0.32
5	Intermediate test speed	25	3.0	0.30
6	Intermediate test speed	10	3.0	0.10
7	Idle	0	3.0	0.15

[1] Speed terms are defined in 40 CFR part 1065.
[2] The percent torque is relative to the maximum torque at the given engine speed.

(ii) The following duty cycle applies for ramped-modal testing:

TABLE 2 OF § 1048.505

RMC mode	Time in mode (seconds)	Engine speed [1, 2]	Torque (percent) [2, 3]
1a Steady-state	119	Warm Idle	0
1b Transition	20	Linear Transition	Linear Transition.
2a Steady-state	29	Intermediate Speed	100
2b Transition	20	Intermediate Speed	Linear Transition.
3a Steady-state	150	Intermediate Speed	10
3b Transition	20	Intermediate Speed	Linear Transition.
4a Steady-state	80	Intermediate Speed	75
4b Transition	20	Intermediate Speed	Linear Transition.
5a Steady-state	513	Intermediate Speed	25
5b Transition	20	Intermediate Speed	Linear Transition.
6a Steady-state	549	Intermediate Speed	50
5b Transition	20	Linear Transition	Linear Transition.
6a Steady-state	96	Maximum test speed	25
6b Transition	20	Linear Transition	Linear Transition.
7 Steady-state	124	Warm Idle	0

[1] Speed terms are defined in 40 CFR part 1065.
[2] Advance from one mode to the next within a 20-second transition phase. During the transition phase, command a linear progression from the torque setting of the current mode to the torque setting of the next mode.
[3] The percent torque is relative to maximum torque at the commanded engine speed.

(2) For engines from an engine family that will be used only at a single, rated speed, use one of the following duty cycles:

(i) The following duty cycle applies for discrete-mode testing:

TABLE 3 OF § 1048.505

D2 mode No.	Engine speed	Torque [1]	Minimum time in mode (minutes)	Weighting factors
1	Maximum test	100	3.0	0.05
2	Maximum test	75	3.0	0.25
3	Maximum test	50	3.0	0.30
4	Maximum test	25	3.0	0.30
5	Maximum test	10	3.0	0.10

[1] The percent torque is relative to the maximum torque at maximum test speed.

(ii) The following duty cycle applies for ramped-modal testing:

TABLE 4 OF § 1048.505

RMC mode	Time in mode (seconds)	Engine speed	Torque (percent) [1 2]
1a Steady-state	53	Engine Governed	100
1b Transition	20	Engine Governed	Linear transition.
2a Steady-state	101	Engine Governed	10
2b Transition	20	Engine Governed	Linear transition.
3a Steady-state	277	Engine Governed	75
3b Transition	20	Engine Governed	Linear transition.

TABLE 4 OF § 1048.505—Continued

RMC mode	Time in mode (seconds)	Engine speed	Torque (percent) [1 2]
4a Steady-state	339	Engine Governed	25
4b Transition	20	Engine Governed	Linear transition.
5 Steady-state	350	Engine Governed	50

[1] The percent torque is relative to maximum test torque.
[2] Advance from one mode to the next within a 20-second transition phase. During the transition phase, command a linear progression from the torque setting of the current mode to the torque setting of the next mode.

(3) Use a duty cycle from both paragraphs (b)(1) and (b)(2) of this section if you will not restrict an engine family to constant-speed or variable-speed applications.

(4) Use a duty cycle specified in paragraph (b)(2) of this section for all severe-duty engines.

(5) For high-load engines, use one of the following duty cycles:

(i) The following duty cycle applies for discrete-mode testing:

TABLE 5 OF § 1048.505

D1 mode No.	Engine speed	Torque [1]	Minimum time in mode (minutes)	Weighting factors
1	Maximum test	100	3.0	0.50
2	Maximum test	75	3.0	0.50

[1] The percent torque is relative to the maximum torque at maximum test speed.

(ii) The following duty cycle applies for discrete-mode testing:

TABLE 6 OF § 1048.505

RMC modes	Time in mode (seconds)	Engine speed (percent)	Torque (percent) [1, 2]
1a Steady-state	290	Engine Governed	100
1b Transition	20	Engine Governed	Linear Transition.
2 Steady-state	290	Engine Governed	75

[1] The percent torque is relative to maximum test torque.
[2] Advance from one mode to the next within a 20-second transition phase. During the transition phase, command a linear progression from the torque setting of the current mode to the torque setting of the next mode.

(c) If we test an engine to confirm that it meets the duty-cycle emission standards, we will use the steady-state duty cycles that apply for that engine family.

(d) During idle mode, operate the engine with the following parameters:

(1) Hold the speed within your specifications.

(2) Set the engine to operate at its minimum fueling rate.

(3) Keep engine torque under 5 percent of maximum test torque.

(e) For full-load operating modes, operate the engine at wide-open throttle.

(f) See 40 CFR part 1065 for detailed specifications of tolerances and calculations.

(g) For those cases where transient testing is not necessary, perform the steady-state test according to this section after an appropriate warm-up period, consistent with 40 CFR part 1065, subpart F.

■ 250. Section 1048.510 is amended by revising the section heading and paragraphs (a) and (c)(1) to read as follows:

§ 1048.510 Which duty cycles do I use for transient testing?

(a) Starting with the 2007 model year, measure emissions by testing the engine on a dynamometer with one of the following transient duty cycles to determine whether it meets the transient emission standards in § 1048.101(a):

(1) For constant-speed engines and severe-duty engines, use the transient duty-cycle described in Appendix I of this part.

(2) For all other engines, use the transient duty cycle described in Appendix II of this part.

* * * * *

(c) * * *

(1) Operate the engine for the first 180 seconds of the appropriate duty cycle from Appendix I or Appendix II of this part, then allow it to idle without load for 30 seconds. At the end of the 30-second idling period, start measuring emissions as the engine operates over the prescribed duty cycle. For severe-duty engines, this engine warm-up procedure may include up to 15 minutes of operation over the appropriate duty cycle.

* * * * *

■ 251. Section 1048.515 is amended by revising the section heading and paragraphs (a)(1) and (a)(2) to read as follows:

§ 1048.515 What are the field-testing procedures?

(a) * * *

(1) Remove the selected engines for testing in a laboratory. You may use an engine dynamometer to simulate normal operation, as described in this section.

(2) Test the selected engines while they remain installed in the equipment. In 40 CFR part 1065, subpart J, we

describe the equipment and sampling methods for testing engines in the field. Use fuel meeting the specifications of 40 CFR part 1065, subpart H, or a fuel typical of what you would expect the engine to use in service.

* * * * *

■ 252. Section 1048.601 is revised to read as follows:

§ 1048.601 What compliance provisions apply to these engines?

Engine and equipment manufacturers, as well as owners, operators, and rebuilders of engines subject to the requirements of this part, and all other persons, must observe the provisions of this part, the requirements and prohibitions in 40 CFR part 1068, and the provisions of the Act.

■ 253. Section 1048.605 is revised to read as follows:

§ 1048.605 What provisions apply to engines certified under the motor-vehicle program?

(a) *General provisions.* If you are an engine manufacturer, this section allows you to introduce new nonroad engines into commerce if they are already certified to the requirements that apply to engines under 40 CFR parts 85 and 86 for the appropriate model year. If you comply with all the provisions of this section, we consider the certificate issued under 40 CFR part 86 for each engine to also be a valid certificate of conformity under this part 1048 for its model year, without a separate application for certification under the requirements of this part 1048. See § 1048.610 for similar provisions that apply to engines certified to chassis-based standards for motor vehicles.

(b) *Equipment-manufacturer provisions.* If you are not an engine manufacturer, you may produce nonroad equipment using motor-vehicle engines under this section as long as you meet all the requirements and conditions specified in paragraph (d) of this section. If you modify the motor-vehicle engine in any of the ways described in paragraph (d)(2) of this section, we will consider you a manufacturer of a new nonroad engine. Such engine modifications prevent you from using the provisions of this section.

(c) *Liability.* Engines for which you meet the requirements of this section are exempt from all the requirements and prohibitions of this part, except for those specified in this section. Engines exempted under this section must meet all the applicable requirements from 40 CFR parts 85 and 86. This applies to engine manufacturers, equipment manufacturers who use these engines, and all other persons as if these engines were used in a motor vehicle. The prohibited acts of 40 CFR 1068.101(a)(1) apply to these new engines and equipment; however, we consider the certificate issued under 40 CFR part 86 for each engine to also be a valid certificate of conformity under this part 1048 for its model year. If we make a determination that these engines do not conform to the regulations during their useful life, we may require you to recall them under 40 CFR part 86 or 40 CFR 1068.505.

(d) *Specific requirements.* If you are an engine manufacturer or equipment manufacturer and meet all the following criteria and requirements regarding your new nonroad engine, the engine is eligible for an exemption under this section:

(1) Your engine must be covered by a valid certificate of conformity issued under 40 CFR part 86.

(2) You must not make any changes to the certified engine that could reasonably be expected to increase its exhaust emissions for any pollutant, or its evaporative emissions. For example, if you make any of the following changes to one of these engines, you do not qualify for this exemption:

(i) Change any fuel system or evaporative system parameters from the certified configuration (this does not apply to refueling controls).

(ii) Change, remove, or fail to properly install any other component, element of design, or calibration specified in the engine manufacturer's application for certification. This includes aftertreatment devices and all related components.

(iii) Modify or design the engine cooling system so that temperatures or heat rejection rates are outside the original engine manufacturer's specified ranges.

(3) You must show that fewer than 50 percent of the engine family's total sales in the United States are used in nonroad applications. This includes engines used in any application without regard to which company manufactures the vehicle or equipment. Show this as follows:

(i) If you are the original manufacturer of the engine, base this showing on your sales information.

(ii) In all other cases, you must get the original manufacturer of the engine to confirm this based on its sales information.

(4) You must ensure that the engine has the label we require under 40 CFR part 86.

(5) You must add a permanent supplemental label to the engine in a position where it will remain clearly visible after installation in the equipment. In the supplemental label, do the following:

(i) Include the heading: ''NONROAD ENGINE EMISSION CONTROL INFORMATION''.

(ii) Include your full corporate name and trademark. You may instead include the full corporate name and trademark of another company you choose to designate.

(iii) State: ''THIS ENGINE WAS ADAPTED FOR NONROAD USE WITHOUT AFFECTING ITS EMISSION CONTROLS. THE EMISSION-CONTROL SYSTEM DEPENDS ON THE USE OF FUEL MEETING SPECIFICATIONS THAT APPLY FOR MOTOR-VEHICLE APPLICATIONS. OPERATING THE ENGINE ON OTHER FUELS MAY BE A VIOLATION OF FEDERAL LAW.''.

(iv) State the date you finished modifying the engine (month and year), if applicable.

(6) The original and supplemental labels must be readily visible after the engine is installed in the equipment or, if the equipment obscures the engine's emission control information label, the equipment manufacturer must attach duplicate labels, as described in 40 CFR 1068.105.

(7) Send the Designated Compliance Officer a signed letter by the end of each calendar year (or less often if we tell you) with all the following information:

(i) Identify your full corporate name, address, and telephone number.

(ii) List the engine or equipment models you expect to produce under this exemption in the coming year.

(iii) State: ''We produce each listed [engine or equipment] model for nonroad application without making any changes that could increase its certified emission levels, as described in 40 CFR 1048.605.''.

(e) *Failure to comply.* If your engines do not meet the criteria listed in paragraph (d) of this section, they will be subject to the standards, requirements, and prohibitions of this part 1048 and the certificate issued under 40 CFR part 86 will not be deemed to also be a certificate issued under this part 1048. Introducing these engines into commerce without a valid exemption or certificate of conformity under this part violates the prohibitions in 40 CFR 1068.101(a)(1).

(f) *Data submission.* We may require you to send us emission test data on any applicable nonroad duty cycles.

(g) *Participation in averaging, banking and trading.* Engines adapted for nonroad use under this section may generate credits under the ABT provisions in 40 CFR part 86. These

engines must use emission credits under 40 CFR part 86 if they are certified to an FEL that exceeds an applicable standard under 40 CFR part 86.

■ 254. Section 1048.610 is revised to read as follows:

§ 1048.610 What provisions apply to vehicles certified under the motor-vehicle program?

(a) *General provisions.* If you are a motor-vehicle manufacturer, this section allows you to introduce new nonroad engines or equipment into commerce if the vehicle is already certified to the requirements that apply under 40 CFR parts 85 and 86 for the appropriate model year. If you comply with all of the provisions of this section, we consider the certificate issued under 40 CFR part 86 for each motor vehicle to also be a valid certificate of conformity for the engine under this part 1048 for its model year, without a separate application for certification under the requirements of this part 1048. See § 1048.605 or similar provisions that apply to motor-vehicle engines produced for nonroad equipment. The provisions of this section do not apply to engines certified to meet the requirements for highway motorcycles.

(b) *Equipment-manufacturer provisions.* If you are not a motor-vehicle manufacturer, you may produce nonroad equipment from motor vehicles under this section as long as you meet all the requirements and conditions specified in paragraph (d) of this section. If you modify the motor vehicle or its engine in any of the ways described in paragraph (d)(2) of this section, we will consider you a manufacturer of a new nonroad engine. Such modifications prevent you from using the provisions of this section.

(c) *Liability.* Engines, vehicles, and equipment for which you meet the requirements of this section are exempt from all the requirements and prohibitions of this part, except for those specified in this section. Engines exempted under this section must meet all the applicable requirements from 40 CFR parts 85 and 86. This applies to engine manufacturers, equipment manufacturers, and all other persons as if the nonroad equipment were motor vehicles. The prohibited acts of 40 CFR 1068.101(a)(1) apply to these new pieces of equipment; however, we consider the certificate issued under 40 CFR part 86 for each motor vehicle to also be a valid certificate of conformity for the engine under this part 1048 for its model year. If we make a determination that these engines, vehicles, or equipment do not conform to the regulations during their useful life, we may require you to recall them under 40 CFR part 86 or 40 CFR 1068.505.

(d) *Specific requirements.* If you are a motor-vehicle manufacturer and meet all the following criteria and requirements regarding your new nonroad equipment and its engine, the engine is eligible for an exemption under this section:

(1) Your equipment must be covered by a valid certificate of conformity as a motor vehicle issued under 40 CFR part 86.

(2) You must not make any changes to the certified vehicle that we could reasonably expect to increase its exhaust emissions for any pollutant, or its evaporative emissions if it is subject to evaporative-emission standards. For example, if you make any of the following changes, you do not qualify for this exemption:

(i) Change any fuel system or evaporative system parameters from the certified configuration, including refueling emission controls.

(ii) Change, remove, or fail to properly install any other component, element of design, or calibration specified in the vehicle manufacturer's application for certification. This includes aftertreatment devices and all related components.

(iii) Modify or design the engine cooling system so that temperatures or heat rejection rates are outside the original vehicle manufacturer's specified ranges.

(iv) Add more than 500 pounds to the curb weight of the originally certified motor vehicle.

(3) You must show that fewer than 50 percent of the engine family's total sales in the United States are used in nonroad applications. This includes any type of vehicle, without regard to which company completes the manufacturing of the nonroad equipment. Show this as follows:

(i) If you are the original manufacturer of the vehicle, base this showing on your sales information.

(ii) In all other cases, you must get the original manufacturer of the vehicle to confirm this based on their sales information.

(4) The equipment must have the vehicle emission control information and fuel labels we require under 40 CFR 86.007–35.

(5) You must add a permanent supplemental label to the equipment in a position where it will remain clearly visible. In the supplemental label, do the following:

(i) Include the heading: ''NONROAD ENGINE EMISSION CONTROL INFORMATION''.

(ii) Include your full corporate name and trademark. You may instead include the full corporate name and trademark of another company you choose to designate.

(iii) State: ''THIS VEHICLE WAS ADAPTED FOR NONROAD USEWITHOUT AFFECTING ITS EMISSION CONTROLS. THEEMISSION-CONTROL SYSTEM DEPENDS ON THE USE OF FUELMEETING SPECIFICATIONS THAT APPLY FOR MOTOR-VEHICLEAPPLICATIONS. OPERATING THE ENGINE ON OTHER FUELSMAY BE A VIOLATION OF FEDERAL LAW.''.

(iv) State the date you finished modifying the vehicle (month and year), if applicable.

(6) The original and supplemental labels must be readily visible in the fully assembled equipment.

(7) Send the Designated Compliance Officer a signed letter by the end of each calendar year (or less often if we tell you) with all the following information:

(i) Identify your full corporate name, address, and telephone number.

(ii) List the equipment models you expect to produce under this exemption in the coming year.

(iii) State: ''We produced each listed engine or equipment model for nonroad application without making any changes that could increase its certified emission levels, as described in 40 CFR 1048.610.''.

(e) *Failure to comply.* If your engines, vehicles, or equipment do not meet the criteria listed in paragraph (d) of this section, the engines will be subject to the standards, requirements, and prohibitions of this part 1048, and the certificate issued under 40 CFR part 86 will not be deemed to also be a certificate issued under this part 1048. Introducing these engines into commerce without a valid exemption or certificate of conformity under this part violates the prohibitions in 40 CFR 1068.101(a)(1).

(f) *Data submission.* We may require you to send us emission test data on any applicable nonroad duty cycles.

(g) *Participation in averaging, banking and trading.* Vehicles adapted for nonroad use under this section may generate credits under the ABT provisions in 40 CFR part 86. These vehicles must use emission credits under 40 CFR part 86 if they are certified to an FEL that exceeds an applicable standard under 40 CFR part 86.

■ 255. Section 1048.615 is amended by revising paragraphs (a)(2), (a)(3), (c), and (d) to read as follows:

§ 1048.615 What are the provisions for exempting engines designed for lawn and garden applications?

* * * * *

(a) * * *

(2) The engine must have a maximum engine power at or below 30 kW.

(3) The engine must be in an engine family that has a valid certificate of conformity showing that it meets emission standards for Class II engines under 40 CFR part 90 for the appropriate model year.

* * * * *

(c) If your engines do not meet the criteria listed in paragraph (a) of this section, they will be subject to the provisions of this part. Introducing these engines into commerce without a valid exemption or certificate of conformity violates the prohibitions in 40 CFR 1068.101.

(d) Engines exempted under this section are subject to all the requirements affecting engines under 40 CFR part 90. The requirements and restrictions of 40 CFR part 90 apply to anyone manufacturing these engines, anyone manufacturing equipment that uses these engines, and all other persons in the same manner as if these engines had a total maximum engine power at or below 19 kW.

■ 256. Section 1048.620 is revised to read as follows:

§ 1048.620 What are the provisions for exempting large engines fueled by natural gas?

(a) If an engine meets all the following criteria, it is exempt from the requirements of this part:

(1) The engine must operate solely on natural gas or liquefied petroleum gas.

(2) The engine must have maximum engine power at or above 250 kW.

(3) The engine must be in an engine family that has a valid certificate of conformity showing that it meets emission standards for engines of that power rating under 40 CFR part 89 or 1039.

(b) The only requirements or prohibitions from this part that apply to an engine that is exempt under this section are in this section.

(c) If your engines do not meet the criteria listed in paragraph (a) of this section, they will be subject to the provisions of this part. Introducing these engines into commerce without a valid exemption or certificate of conformity violates the prohibitions in 40 CFR 1068.101.

(d) Engines exempted under this section are subject to all the requirements affecting engines under 40 CFR part 89 or 1039. The requirements and restrictions of 40 CFR part 89 or 1039 apply to anyone manufacturing these engines, anyone manufacturing equipment that uses these engines, and all other persons in the same manner as if these were nonroad diesel engines.

(e) You may request an exemption under this section by submitting an application for certification for the engines under 40 CFR part 89 or 1039.

■ 257. Section 1048.625 is revised to read as follows:

§ 1048.625 What special provisions apply to engines using noncommercial fuels?

In § 1048.115(e), we generally require that engines meet emission standards for any adjustment within the full range of any adjustable parameters. For engines that use noncommercial fuels significantly different than the specified test fuel of the same type, you may ask to use the parameter-adjustment provisions of this section instead of those in § 1048.115(e). Engines certified under this section must be in a separate engine family.

(a) If we approve your request, the following provisions apply:

(1) You must certify the engine using the test fuel specified in § 1048.501.

(2) You may produce the engine without limits or stops that keep the engine adjusted within the certified range.

(3) You must specify in-use adjustments different than the adjustable settings appropriate for the specified test fuel, consistent with the provisions of paragraph(b)(1) of this section.

(b) To produce engines under this section, you must do the following:

(1) Specify in-use adjustments needed so the engine's level of emission control for each regulated pollutant is equivalent to that from the certified configuration.

(2) Add the following information to the emission control information label specified in § 1048.135:

(i) Include instructions describing how to adjust the engine to operate in a way that maintains the effectiveness of the emission-control system.

(ii) State: ''THIS ENGINE IS CERTIFIED TO OPERATE IN APPLICATIONS USING NONCOMMERCIAL FUEL. MALADJUSTMENT OF THE ENGINE IS A VIOLATION OFFEDERAL LAW SUBJECT TO CIVIL PENALTY.''.

(3) Keep records to document the destinations and quantities of engines produced under this section.

■ 258. A new § 1048.630 is added to subpart G to read as follows:

§ 1048.630 What are the provisions for exempting engines used solely for competition?

The provisions of this section apply for new engines built on or after January 1, 2006.

(a) Equipment manufacturers may use uncertified engines if the vehicles or equipment in which they are installed will be used solely for competition.

(b) The definition of nonroad engine in 40 CFR 1068.30 excludes engines used solely for competition. These engines are not required to comply with this part 1048, but 40 CFR 1068.101 prohibits the use of competition engines for noncompetition purposes.

(c) We consider a vehicle or piece of equipment to be one that will be used solely for competition if it has features that are not easily removed that would make its use other than in competition unsafe, impractical, or highly unlikely.

(d) As an engine manufacturer, your engine is exempt without our prior approval if you have a written request for an exempted engine from the equipment manufacturer showing the basis for believing that the equipment will be used solely for competition. You must permanently label engines exempted under this section to clearly indicate that they are to be used solely for competition. Failure to properly label an engine will void the exemption.

(e) We may discontinue an exemption under this section if we find that engines are not used solely for competition.

■ 259. A new § 1048.635 is added to subpart G to read as follows:

§ 1048.635 What special provisions apply to branded engines?

The following provisions apply if you identify the name and trademark of another company instead of your own on your emission control information label, as provided by § 1048.135(c)(2):

(a) You must have a contractual agreement with the other company that obligates that company to take the following steps:

(1) Meet the emission warranty requirements that apply under § 1048.120. This may involve a separate agreement involving reimbursement of warranty-related expenses.

(2) Report all warranty-related information to the certificate holder.

(b) In your application for certification, identify the company whose trademark you will use and describe the arrangements you have made to meet your requirements under this section.

(c) You remain responsible for meeting all the requirements of this chapter, including warranty and defect-reporting provisions.

■ 260. Section 1048.801 is revised to read as follows:

§ 1048.801 What definitions apply to this part?

The following definitions apply to this part. The definitions apply to all subparts unless we note otherwise. All undefined terms have the meaning the Act gives to them. The definitions follow:

Act means the Clean Air Act, as amended, 42 U.S.C. 7401–7671q.

Adjustable parameter means any device, system, or element of design that someone can adjust (including those which are difficult to access) and that, if adjusted, may affect emissions or engine performance during emission testing or normal in-use operation. This includes, but is not limited to, parameters related to injection timing and fueling rate. You may ask us to exclude a parameter that is difficult to access if it cannot be adjusted to affect emissions without significantly degrading engine performance, or if you otherwise show us that it will not be adjusted in a way that affects emissions during in-use operation.

Aftertreatment means relating to a catalytic converter, particulate filter, or any other system, component, or technology mounted downstream of the exhaust valve (or exhaust port) whose design function is to decrease emissions in the engine exhaust before it is exhausted to the environment. Exhaust-gas recirculation (EGR) and turbochargers are not aftertreatment.

Aircraft means any vehicle capable of sustained air travel above treetop heights.

All-terrain vehicle has the meaning given in 40 CFR 1051.801.

Amphibious vehicle means a vehicle with wheels or tracks that is designed primarily for operation on land and secondarily for operation in water.

Auxiliary emission-control device means any element of design that senses temperature, motive speed, engine rpm, transmission gear, or any other parameter for the purpose of activating, modulating, delaying, or deactivating the operation of any part of the emission-control system.

Blue Sky Series engine means an engine meeting the requirements of § 1048.140.

Brake power means the usable power output of the engine, not including power required to fuel, lubricate, or heat the engine, circulate coolant to the engine, or to operate aftertreatment devices.

Calibration means the set of specifications and tolerances specific to a particular design, version, or application of a component or assembly capable of functionally describing its operation over its working range.

Certification means relating to the process of obtaining a certificate of conformity for an engine family that complies with the emission standards and requirements in this part.

Certified emission level means the highest deteriorated emission level in an engine family for a given pollutant from either transient or steady-state testing.

Compression-ignition means relating to a type of reciprocating, internal-combustion engine that is not a spark-ignition engine.

Constant-speed engine means an engine whose certification is limited to constant-speed operation. Engines whose constant-speed governor function is removed or disabled are no longer constant-speed engines.

Constant-speed operation means engine operation with a governor that controls the operator input to maintain an engine at a reference speed, even under changing load. For example, an isochronous governor changes reference speed temporarily during a load change, then returns the engine to its original reference speed after the engine stabilizes. Isochronous governors typically allow speed changes up to 1.0 %. Another example is a speed-droop governor, which has a fixed reference speed at zero load and allows the reference speed to decrease as load increases. With speed-droop governors, speed typically decreases (3 to 10) % below the reference speed at zero load, such that the minimum reference speed occurs near the engine's point of maximum power.

Crankcase emissions means airborne substances emitted to the atmosphere from any part of the engine crankcase's ventilation or lubrication systems. The crankcase is the housing for the crankshaft and other related internal parts.

Critical emission-related component means any of the following components:

(1) Electronic control units, aftertreatment devices, fuel-metering components, EGR-system components, crankcase-ventilation valves, all components related to charge-air compression and cooling, and all sensors and actuators associated with any of these components.

(2) Any other component whose primary purpose is to reduce emissions.

Designated Compliance Officer means the Manager, Engine Programs Group (6405–J), U.S. Environmental Protection Agency, 1200 Pennsylvania Ave., NW., Washington, DC 20460.

Designated Enforcement Officer means the Director, Air Enforcement Division (2242A), U.S. Environmental Protection Agency, 1200 Pennsylvania Ave., NW., Washington, DC 20460.

Deteriorated emission level means the emission level that results from applying the appropriate deterioration factor to the official emission result of the emission-data engine.

Deterioration factor means the relationship between emissions at the end of useful life and emissions at the low-hour test point, expressed in one of the following ways:

(1) For multiplicative deterioration factors, the ratio of emissions at the end of useful life to emissions at the low-hour test point.

(2) For additive deterioration factors, the difference between emissions at the end of useful life and emissions at the low-hour test point.

Discrete-mode means relating to the discrete-mode type of steady-state test described in § 1048.505.

Emission-control system means any device, system, or element of design that controls or reduces the regulated emissions from an engine.

Emission-data engine means an engine that is tested for certification. This includes engines tested to establish deterioration factors.

Emission-related maintenance means maintenance that substantially affects emissions or is likely to substantially affect emission deterioration.

Engine configuration means a unique combination of engine hardware and calibration within an engine family. Engines within a single engine configuration differ only with respect to normal production variability.

Engine family has the meaning given in § 1048.230.

Engine manufacturer means the manufacturer of the engine. See the definition of ''manufacturer'' in this section.

Equipment manufacturer means a manufacturer of nonroad equipment. All nonroad equipment manufacturing entities under the control of the same person are considered to be a single nonroad equipment manufacturer.

Excluded means relating to an engine that either:

(1) Has been determined not to be a nonroad engine, as specified in 40 CFR 1068.30; or

(2) Is a nonroad engine that, according to § 1048.5, is not subject to this part 1048.

Exempted has the meaning given in 40 CFR 1068.30.

Exhaust-gas recirculation means a technology that reduces emissions by routing exhaust gases that had been exhausted from the combustion chamber(s) back into the engine to be

mixed with incoming air before or during combustion. The use of valve timing to increase the amount of residual exhaust gas in the combustion chamber(s) that is mixed with incoming air before or during combustion is not considered exhaust-gas recirculation for the purposes of this part.

Fuel system means all components involved in transporting, metering, and mixing the fuel from the fuel tank to the combustion chamber(s), including the fuel tank, fuel tank cap, fuel pump, fuel filters, fuel lines, carburetor or fuel-injection components, and all fuel-system vents.

Fuel type means a general category of fuels such as gasoline or natural gas. There can be multiple grades within a single fuel type, such as winter-grade and summer-grade gasoline.

Good engineering judgment has the meaning given in 40 CFR 1068.30. See 40 CFR 1068.5 for the administrative process we use to evaluate good engineering judgment.

High-cost warranted part means a component covered by the emission-related warranty with a replacement cost (at the time of certification) exceeding $400 (in 1998 dollars). Adjust this value using the most recent annual average consumer price index information published by the U.S. Bureau of Labor Statistics. For this definition, replacement cost includes the retail cost of the part plus labor and standard diagnosis.

High-load engine means an engine for which the engine manufacturer can provide clear evidence that operation below 75 percent of maximum load in its final application will be rare.

Hydrocarbon (HC) means the hydrocarbon group on which the emission standards are based for each fuel type, as described in § 1048.101(e).

Identification number means a unique specification (for example, a model number/serial number combination) that allows someone to distinguish a particular engine from other similar engines.

Intermediate test speed has the meaning given in 40 CFR 1065.1001.

Low-hour means relating to an engine with stabilized emissions and represents the undeteriorated emission level. This would generally involve less than 300 hours of operation.

Manufacturer has the meaning given in section 216(1) of the Act. In general, this term includes any person who manufactures an engine, vehicle, or piece of equipment for sale in the United States or otherwise introduces a new nonroad engine into commerce in the United States. This includes importers who import engines, equipment, or vehicles for resale.

Marine engine means a nonroad engine that is installed or intended to be installed on a marine vessel. This includes a portable auxiliary engine only if its fueling, cooling, or exhaust system is an integral part of the vessel. There are two kinds of marine engines:

(1) Propulsion marine engine means a marine engine that moves a vessel through the water or directs the vessel's movement.

(2) Auxiliary marine engine means a marine engine not used for propulsion.

Marine vessel has the meaning given in 1 U.S.C. 3, except that it does not include amphibious vehicles. The definition in 1 U.S.C. 3 very broadly includes every craft capable of being used as a means of transportation on water.

Maximum engine power has one of the following meanings:

(1) For engines at or below 30 kW, maximum engine power has the meaning given in 40CFR 90.3.

(2) For engines above 30 kW, maximum engine power has the meaning given in 40 CFR 1039.140

Maximum test speed has one of the following meanings:

(1) For variable-speed engines, maximum test speed has the meaning given in 40 CFR 1065.1001.

(2) For transient testing of constant-speed engines, maximum test speed means the highest speed at which the engine produces zero torque.

(3) For steady-state testing of constant-speed engines, maximum test speed means the speed at which the engine produces peak torque.

Maximum test torque has the meaning given in 40 CFR 1065.1001.

Model year means one of the following things:

(1) For freshly manufactured equipment and engines (see definition of ''new nonroad engine,'' paragraph (1)), model year means one of the following:

(i) Calendar year.

(ii) Your annual new model production period if it is different than the calendar year. This must include January 1 of the calendar year for which the model year is named. It may not begin before January 2 of the previous calendar year and it must end by December 31 of the named calendar year.

(2) For an engine that is converted to a nonroad engine after being placed into service as a motor-vehicle engine or a stationary engine, model year means the calendar year in which the engine was originally produced (see definition of ''new nonroad engine,'' paragraph(2)).

(3) For a nonroad engine excluded under § 1048.5 that is later converted to operate in an application that is not excluded, model year means the calendar year in which the engine was originally produced (see definition of ''new nonroad engine,'' paragraph (3)).

(4) For engines that are not freshly manufactured but are installed in new nonroad equipment, model year means the calendar year in which the engine is installed in the new nonroad equipment (see definition of ''new nonroad engine,'' paragraph (4)).

(5) For imported engines:

(i) For imported engines described in paragraph (5)(i) of the definition of ''new nonroad engine,'' *model year* has the meaning given in paragraphs (1) through (4) of this definition.

(ii) [Reserved]

Motor vehicle has the meaning given in 40 CFR 85.1703(a).

New nonroad engine means any of the following things:

(1) A freshly manufactured nonroad engine for which the ultimate purchaser has never received the equitable or legal title. This kind of engine might commonly be thought of as ''brand new.'' In the case of this paragraph (1), the engine becomes new when it is fully assembled for the first time. The engine is no longer new when the ultimate purchaser receives the title or the product is placed into service, whichever comes first.

(2) An engine originally manufactured as a motor-vehicle engine or a stationary engine that is later intended to be used in a piece of nonroad equipment. In this case, the engine is no longer a motor-vehicle or stationary engine and becomes a ''new nonroad engine''. The engine is no longer new when it is placed into nonroad service.

(3) A nonroad engine that has been previously placed into service in an application we exclude under § 1048.5, where that engine is installed in a piece of equipment that is covered by this part 1048. The engine is no longer new when it is placed into nonroad service covered by this part 1048. For example, this would apply to a marine-propulsion engine that is no longer used in a marine vessel.

(4) An engine not covered by paragraphs (1) through (3) of this definition that is intended to be installed in new nonroad equipment. The engine is no longer new when the ultimate purchaser receives a title for the equipment or the product is placed into service, whichever comes first. This generally includes installation of used engines in new equipment.

(5) An imported nonroad engine, subject to the following provisions:

(i) An imported nonroad engine covered by a certificate of conformity issued under this part that meets the criteria of one or more of paragraphs (1) through (4) of this definition, where the original engine manufacturer holds the certificate, is new as defined by those applicable paragraphs.

(ii) An imported nonroad engine covered by a certificate of conformity issued under this part, where someone other than the original engine manufacturer holds the certificate (such as when the engine is modified after its initial assembly), becomes new when it is imported. It is no longer new when the ultimate purchaser receives a title for the engine or it is placed into service, whichever comes first.

(iii) An imported nonroad engine that is not covered by a certificate of conformity issued under this part at the time of importation is new, but only if it was produced on or after January 1, 2004. This addresses uncertified engines and equipment initially placed into service that someone seeks to import into the United States. Importation of this kind of new nonroad engine (or equipment containing such an engine) is generally prohibited by 40 CFR part 1068.

New nonroad equipment means either of the following things:

(1) A nonroad piece of equipment for which the ultimate purchaser has never received the equitable or legal title. The product is no longer new when the ultimate purchaser receives this title or the product is placed into service, whichever comes first.

(2) An imported nonroad piece of equipment with an engine not covered by a certificate of conformity issued under this part at the time of importation and manufactured afterJanuary 1, 2004.

Noncommercial fuel means a combustible product that is not marketed as a commercial fuel, but is used as a fuel for nonroad engines. For example, this includes methane that is produced and released from landfills or oil wells, or similar unprocessed fuels that are not intended to meet any otherwise applicable fuel specifications. See§ 1048.615 for provisions related to engines designed to burn noncommercial fuels.

Noncompliant engine means an engine that was originally covered by a certificate of conformity, but is not in the certified configuration or otherwise does not comply with the conditions of the certificate.

Nonconforming engine means an engine not covered by a certificate of conformity that would otherwise be subject to emission standards.

Nonmethane hydrocarbon means the difference between the emitted mass of total hydrocarbons and the emitted mass of methane.

Nonroad means relating to nonroad engines or equipment that includes nonroad engines.

Nonroad engine has the meaning given in 40 CFR 1068.30. In general this means all internal-combustion engines except motor vehicle engines, stationary engines, engines used solely for competition, or engines used in aircraft. This part does not apply to all nonroad engines (see § 1048.5).

Nonroad equipment means a piece of equipment that is powered by one or more nonroad engines.

Off-highway motorcycle has the meaning given in 40 CFR 1051.801. (Note: highway motorcycles are regulated under 40 CFR part 86.)

Official emission result means the measured emission rate for an emission-data engine on a given duty cycle before the application of any deterioration factor, but after the applicability of regeneration adjustment factors.

Owners manual means a document or collection of documents prepared by the engine manufacturer for the owner or operator to describe appropriate engine maintenance, applicable warranties, and any other information related to operating or keeping the engine. The owners manual is typically provided to the ultimate purchaser at the time of sale.

Oxides of nitrogen has the meaning given in 40 CFR part 1065.

Piece of equipment means any vehicle, vessel, or other type of equipment using engines to which this part applies.

Placed into service means put into initial use for its intended purpose.

Point of first retail sale means the location at which the initial retail sale occurs. This generally means an equipment dealership, but may also include an engine seller or distributor in cases where loose engines are sold to the general public for uses such as replacement engines.

Ramped-modal means relating to the ramped-modal type of steady-state test described in § 1048.505.

Rated speed means the maximum full-load governed speed for governed engines and the speed of maximum power for ungoverned engines.

Revoke has the meaning given in 40 CFR 1068.30.

Round has the meaning given in 40 CFR 1065.1001, unless otherwise specified.

Scheduled maintenance means adjusting, repairing, removing, disassembling, cleaning, or replacing components or systems periodically to keep a part or system from failing, malfunctioning, or wearing prematurely. It also may mean actions you expect are necessary to correct an overt indication of failure or malfunction for which periodic maintenance is not appropriate.

Severe-duty application includes concrete saws, concrete pumps, and any other application where an engine manufacturer can provide clear evidence that the majority of installations need air-cooled engines as a result of operation in a severe-duty environment.

Severe-duty engine means an engine from an engine family in which the majority of engines are installed in severe-duty applications.

Small-volume engine manufacturer means a company with fewer than 200 employees. This includes any employees working for parent or subsidiary companies.

Snowmobile has the meaning given in 40 CFR 1051.801.

Spark-ignition means relating to a gasoline-fueled engine or any other type of engine with a spark plug (or other sparking device) and with operating characteristics significantly similar to the theoretical Otto combustion cycle. Spark-ignition engines usually use a throttle to regulate intake air flow to control power during normal operation.

Steady-state means relating to emission tests in which engine speed and load are held at a finite set of essentially constant values. Steady-state tests are either discrete-mode tests or ramped-modal tests.

Stoichiometric means relating to the particular ratio of air and fuel such that if the fuel were fully oxidized, there would be no remaining fuel or oxygen. For example, stoichiometric combustion in a gasoline-fueled engine typically occurs at an air-fuel mass ratio of about 14.7.

Suspend has the meaning given in 40 CFR 1068.30.

Test engine means an engine in a test sample.

Test sample means the collection of engines selected from the population of an engine family for emission testing. This may include testing for certification, production-line testing, or in-use testing.

Tier 1 means relating to the emission standards and other requirements that apply beginning with the 2004 model year.

Tier 2 means relating to the emission standards and other requirements that apply beginning with the 2007 model year.

Total hydrocarbon means the combined mass of organic compounds measured by the specified procedure for measuring total hydrocarbon, expressed as a hydrocarbon with a hydrogen-to-carbon mass ratio of 1.85:1.

Total hydrocarbon equivalent means the sum of the carbon mass contributions of non-oxygenated hydrocarbons, alcohols and aldehydes, or other organic compounds that are measured separately as contained in a gas sample, expressed as exhaust hydrocarbon from petroleum-fueled engines. The hydrogen-to-carbon ratio of the equivalent hydrocarbon is 1.85:1.

Ultimate purchaser means, with respect to any new nonroad equipment or new nonroad engine, the first person who in good faith purchases such new nonroad equipment or new nonroad engine for purposes other than resale.

United States has the meaning given in 40 CFR 1068.30.

Upcoming model year means for an engine family the model year after the one currently in production.

U.S.-directed production volume means the number of engine units, subject to the requirements of this part, produced by a manufacturer for which the manufacturer has a reasonable assurance that sale was or will be made to ultimate purchasers in the UnitedStates.

Useful life means the period during which the engine is designed to properly function in terms of reliability and fuel consumption, without being remanufactured, specified as a number of hours of operation or calendar years, whichever comes first. It is the period during which a new nonroad engine is required to comply with all applicable emission standards. See § 1048.101(g).

Variable-speed engine means an engine that is not a constant-speed engine.

Variable-speed operation means engine operation that does not meet the definition of constant-speed operation.

Void has the meaning given in 40 CFR 1068.30.

Volatile liquid fuel means any fuel other than diesel or biodiesel that is a liquid at atmospheric pressure and has a Reid Vapor Pressure higher than 2.0 pounds per square inch.

Wide-open throttle means maximum throttle opening. Unless this is specified at a given speed, it refers to maximum throttle opening at maximum speed. For electronically controlled or other engines with multiple possible fueling rates, wide-open throttle also means the maximum fueling rate at maximum throttle opening under test conditions.

We (us, our) means the Administrator of the Environmental Protection Agency and any authorized representatives.

■ 261. Section 1048.805 is amended by adding ''NARA'' to the table in alphabetical order to read as follows:

§ 1048.805 What symbols, acronyms, and abbreviations does this part use?

* * * * *

* * * * * * *

NARA ..... National Archives and Records Administration.

* * * * * * *

■ 262. Section 1048.810 is revised to read as follows:

§ 1048.810 What materials does this part reference?

Documents listed in this section have been incorporated by reference into this part. The Director of the Federal Register approved the incorporation by reference as prescribed in 5 U.S.C. 552(a) and 1 CFR part 51. Anyone may inspect copies at the U.S. EPA, Air and Radiation Docket and Information Center, 1301 Constitution Ave., NW., Room B102, EPA West Building, Washington, DC 20460 or at the National Archives and Records Administration (NARA). For information on the availability of this material at NARA, call 202–741–6030, or go to: *http://www.archives.gov/federal_register/code_of_federal_regulations/ibr_locations.html.*

(a) [Reserved]

(b) *SAE material.* Table 2 of this section lists material from the Society of AutomotiveEngineering that we have incorporated by reference. The first column lists the number and name of the material. The second column lists the sections of this part where we reference it. Anyone may purchase copies of these materials from the Society of Automotive Engineers, 400 Commonwealth Drive, Warrendale, PA 15096 or *http://www.sae.org.* Table 2 follows:

TABLE 2 OF § 1048.810.—SAE MATERIALS

Document number and name	Part 1048 reference
SAE J1930, Electrical/Electronic Systems Diagnostic Terms, Definitions, Abbreviations, and Acronyms, revised May 1998	1048.135
SAE J2260, Nonmetallic Fuel System Tubing with One or More Layers, November 1996	1048.105

(c) *ISO material.* Table 3 of this section lists material from the International Organization for Standardization that we have incorporated by reference. The first column lists the number and name of the material. The second column lists the section of this part where we reference it. Anyone may purchase copies of these materials from the International Organization for Standardization, Case Postale 56, CH–1211 Geneva 20,Switzerland or *http://www.iso.org.* Table 3 follows:

TABLE 3 OF § 1048.810.—ISO MATERIALS

Document number and name	Part 1048 reference
ISO 9141–2 Road vehicles—Diagnostic systems—Part 2: CARB requirements for interchange of digital information, February 1994	1048.110
ISO 14230–4 Road vehicles—Diagnostic systems—Keyword Protocol 2000—Part 4: Requirements for emission-related systems, June 2000	1048.110

■ 263. Section 1048.815 is revised to read as follows:

§ 1048.815 What provisions apply to confidential information?

(a) Clearly show what you consider confidential by marking, circling, bracketing, stamping, or some other method.

(b) We will store your confidential information as described in 40 CFR part 2. Also, we will disclose it only as specified in 40 CFR part 2. This applies both to any information you send us and to any information we collect from inspections, audits, or other site visits.

(c) If you send us a second copy without the confidential information, we will assume it contains nothing confidential whenever we need to release information from it.

(d) If you send us information without claiming it is confidential, we may make it available to the public without further notice to you, as described in 40 CFR 2.204.

■ 264. Section 1048.820 is revised to read as follows:

§ 1048.820 How do I request a hearing?

(a) You may request a hearing under certain circumstances, as described elsewhere in this part. To do this, you must file a written request, including a description of your objection and any supporting data, within 30 days after we make a decision.

(b) For a hearing you request under the provisions of this part, we will approve your request if we find that your request raises a substantial factual issue.

(c) If we agree to hold a hearing, we will use the procedures specified in 40 CFR part 1068, subpart G.

■ 265. Appendix I to part 1048 is amended in the table by adding a footnote to read as follows:

Appendix I to Part 1048—Large Spark-ignition (SI) Transient Cycle for Constant-Speed Engines

* * * * *

Time(s)	Normalized speed	Normalized torque[1]
*	*	*

[1] The percent torque is relative to maximum torque at the commanded engine speed.

PART 1051—CONTROL OF EMISSIONS FROM RECREATIONAL ENGINES AND VEHICLES

■ 266. The authority citation for part 1051 is revised to read as follows:

Authority: 42 U.S.C. 7401—7671q.

■ 267. The heading for subpart A is revised to read as follows:

Subpart A—Overview and Applicability

■ 268. Section 1051.1 is revised to read as follows:

§ 1051.1 Does this part apply for my vehicles or engines?

(a) The regulations in this part 1051 apply for all the following new recreational vehicles or new engines used in the following recreational vehicles, except as provided in § 1051.5:

(1) Snowmobiles.

(2) Off-highway motorcycles.

(3) All-terrain vehicles (ATVs.)

(4) Offroad utility vehicles with engines with displacement less than or equal to 1000 cc, maximum engine power less than or equal to 30 kW, and maximum vehicle speed of 25 miles per hour or higher. Offroad utility vehicles that are subject to this part are subject to the same requirements as ATVs. This means that any requirement that applies to ATVs also applies to these offroad utility vehicles, without regard to whether the regulatory language mentions offroad utility vehicles.

(b) In certain cases, the regulations in this part 1051 apply to new engines under 50 cc used in motorcycles that are motor vehicles. See 40 CFR 86.447–2006 or 86.448–2006 for provisions related to this allowance.

(c) This part 1051 applies for new recreational vehicles starting in the 2006 model year, except as described in subpart B of this part. You need not follow this part for vehicles you produce before the 2006 model year, unless you certify voluntarily. See §§ 1051.103 through 1051.110, § 1051.145, and the definition of ''model year'' in § 1051.801 for moreinformation about the timing of the requirements.

(d) The requirements of this part begin to apply when a vehicle is new. See the definition of ''new'' in § 1051.801 for more information. In some cases, vehicles or engines that have been previously used may be considered ''new'' for the purposes of this part.

(e) The evaporative emission requirements of this part apply to highway motorcycles, as specified in 40 CFR part 86, subpart E.

■ 269. Section 1051.5 is revised to read as follows:

§ 1051.5 Which engines are excluded from this part's requirements?

(a) You may exclude vehicles with compression-ignition engines. See 40 CFR part 89 or 1039 for regulations that cover these engines.

(b) We may require you to label an engine or vehicle (or both) if this section excludes it and other requirements in this chapter do not apply.

■ 270. Section 1051.10 is revised to read as follows:

§ 1051.10 How is this part organized?

The regulations in this part 1051 contain provisions that affect both vehicle manufacturers and others. However, the requirements of this part are generally addressed to the vehicle manufacturer. The term ''you'' generally means the vehicle manufacturer, as defined in § 1051.801. This part 1051 is divided into the following subparts:

(a) Subpart A of this part defines the applicability of part 1051 and gives an overview of regulatory requirements.

(b) Subpart B of this part describes the emission standards and other requirements that must be met to certify engines under this part. Note that § 1051.145 discusses certaininterim requirements and compliance provisions that apply only for a limited time.

(c) Subpart C of this part describes how to apply for a certificate of conformity.

(d) Subpart D of this part describes general provisions for testing production-line engines.

(e) [Reserved]

(f) Subpart F of this part describes how to test your engines (including references to other parts of the Code of Federal Regulations).

(g) Subpart G of this part and 40 CFR part 1068 describe requirements, prohibitions, and other provisions that apply to engine manufacturers, equipment manufacturers, owners, operators, rebuilders, and all others.

(h) Subpart H of this part describes how you may generate and use emission credits to certify your engines.

(i) Subpart I of this part contains definitions and other reference information.

■ 271. Section 1051.15 is revised to read as follows:

§ 1051.15 Do any other regulation parts apply to me?

(a) Parts 86 and 1065 of this chapter describe procedures and equipment specifications for testing vehicles and engines. Subpart F of this part 1051 describes how to apply the provisions of parts 86 and 1065 of this chapter to determine whether vehicles meet the emission standards in this part.

(b) The requirements and prohibitions of part 1068 of this chapter apply to everyone,including anyone who manufactures, imports, installs, owns, operates, or rebuilds any of the vehicles subject to this part 1051, or vehicles containing these engines. Part 1068 of this chapter describes general provisions, including these seven areas:

(1) Prohibited acts and penalties for manufacturers and others.

(2) Rebuilding and other aftermarket changes.

(3) Exclusions and exemptions for certain vehicles and engines.

(4) Importing vehicles and engines.

(5) Selective enforcement audits of your production.

(6) Defect reporting and recall.

(7) Procedures for hearings.

(c) Other parts of this chapter apply if referenced in this part.

■ 272. Section 1051.101 is amended by revising paragraphs (a)(1), (a)(2), (c), and (f) to read as follows:

§ 1051.101 What emission standards and other requirements must my vehicles meet?

(a) * * *

(1) The applicable exhaust emission standards in § 1051.103, § 1051.105, § 1051.107, or § 1051.145.

(i) For snowmobiles, see § 1051.103.

(ii) For off-highway motorcycles, see § 1051.105.

(iii) For all-terrain vehicles and offroad utility vehicles subject to this part, see § 1051.107 and § 1051.145.

(2) The evaporative emission standards in § 1051.110.

* * * * *

(c) These standards and requirements apply to all testing, including certification, production-line, and in-use testing.

* * * * *

(f) As described in § 1051.1(a)(4), offroad utility vehicles that are subject to this part are subject to the same requirements as ATVs.

■ 273. Section 1051.103 is amended by revising paragraph (a)(1) before the table and paragraphs (b) introductory text and (c) introductory text to read as follows:

§ 1051.103 What are the exhaust emission standards for snowmobiles?

(a) * * *

(1) Follow Table 1 of this section for exhaust emission standards. You may generate or use emission credits under the averaging, banking, and trading (ABT) program for $HC+NO_X$ and CO emissions, as described in subpart H of this part. This requires that you specify a family emission limit for each pollutant you include in the ABT program for each engine family. These family emission limits serve as the emission standards for the engine family with respect to all required testing instead of the standards specified in this section. An engine family meets emission standards evenif its family emission limit is higher than the standard, as long as you show that the whole averaging set of applicable engine families meets the applicable emission standards using emission credits, and the vehicles within the family meet the family emission limit. The phase-in values specify the percentage of your U.S.-directed production that must comply with the emission standards for those model years. Calculate this compliance percentage based on a simple count of your U.S.-directed production units within each certified engine family compared with a simple count of your total U.S.-directed production units. Table 1 also shows the maximum value you may specify for a family emission limit, as follows:

* * * * *

(b) The exhaust emission standards in this section apply for snowmobiles using the fuel type on which they are designed to operate. You must meet the numerical emission standards for hydrocarbons in this section based on the following types of hydrocarbon emissions for snowmobiles powered by the following fuels:

* * * * *

(c) Your snowmobiles must meet emission standards over their full useful life. The minimum useful life is 8,000 kilometers, 400 hours of engine operation, or five calendar years, whichever comes first. You must specify a longer useful life in terms of kilometers and hours for the engine family if the average service life of your vehicles is longer than the minimum value, as follows:

* * * * *

■ 274. Section 1051.105 is amended by revising paragraph (a)(1) before the table and paragraphs (a)(3), (b) introductory text, and (c) introductory text to read as follows:

§ 1051.105 What are the exhaust emission standards for off-highway motorcycles?

(a) * * *

(1) Follow Table 1 of this section for exhaust emission standards. You may generate or use emission credits under the averaging, banking, and trading (ABT) program for $HC+NO_X$ and CO emissions, as described in subpart H of this part. This requires that you specify a family emission limit for each pollutant you include in the ABT program for each engine family. These family emission limits serve as the emission standards for the engine family with respect to all required testing instead of the standards specified in this section. An engine family meets emission standards evenif its family emission limit is higher than the standard, as long as you show that the whole averaging set of applicable engine families meets the applicable emission standards using emission credits, and the vehicles within the family meet the family emission limit. The phase-in values specify the percentage of your U.S.-directed production that must comply with the emission standards for those model years. Calculate this compliance percentage based on a simple count of your U.S.-directed production units within each certified engine family compared with a simple count of your total U.S.-directed production units. Table 1 follows:

* * * * *

(3) You may certify off-highway motorcycles with engines that have total displacement of 70 cc or less to the exhaust emission standards in § 1051.615 instead of certifying them to the exhaust emission standards of this section. Count all such vehicles in the phase-in (percent) requirements of this section.

(b) The exhaust emission standards in this section apply for off-highway motorcycles using the fuel type on which they are designed to operate. You must meet the numerical emission standards for hydrocarbons in this section based on the following types of hydrocarbon emissions for off-highway

motorcycles powered by the following fuels:

* * * * *

(c) Your off-highway motorcycles must meet emission standards over their full useful life. For off-highway motorcycles with engines that have total displacement greater than 70 cc, the minimum useful life is 10,000 kilometers or five years, whichever comes first. For off-highway motorcycles with engines that have total displacement of 70 cc or less, the minimum useful life is 5,000 kilometers or five years, whichever comes first. You must specify a longer useful life for the engine family in terms of kilometers if the average service life of your vehicles is longer than the minimum value, as follows:

* * * * *

■ 275. Section 1051.107 is amended by revising paragraphs (a), (b) introductory text, and

(c) introductory text to read as follows:

§ 1051.107 What are the exhaust emission standards for all-terrain vehicles (ATVs) and offroad utility vehicles?

* * * * *

(a) Apply the exhaust emission standards in this section by model year. Measure emissions with the ATV test procedures in subpart F of this part.

(1) Follow Table 1 of this section for exhaust emission standards. You may generate or use emission credits under the averaging, banking, and trading (ABT) program for $HC+NO_X$ emissions, as described in subpart H of this part. This requires that you specify a family emission limit for each pollutant you include in the ABT program for each engine family. These family emission limits serve as the emission standards for the engine family with respect to all required testing instead of the standards specifiedin this section. An engine family meets emission standards even if its family emission limit is higher than the standard, as long as you show that the whole averaging set of applicable engine families meets the applicable emission standards using emission credits, and the vehicles within the family meet the family emission limit. Table 1 also shows the maximum value you may specify for a family emission limit. The phase-in values in the table specify the percentage of your total U.S.-directed production that must comply with the emission standards for those model years.

Calculate this compliance percentage based on a simple count of your U.S.-directed production units within each certified engine family compared with a simple count of your total U.S.-directed production units. This applies to your total production of ATVs and offroad utility vehicles that are subject to the standards of this part; including both ATVs and offroad utility vehicles subject to the standards of this section and ATVs and offroad utility vehicles certified to the standards of other sections in this part 1051 (such as § 1051.615, but not including vehicles certified under other parts in this chapter (such as 40 CFR part 90). Table 1 follows:

TABLE 1 OF § 1051.107.—EXHAUST EMISSION STANDARDS FOR ATVS (G/KM)

Phase	Model year	Phase-in (percent)	Emission standards		Maximum allowable family emission limits	
			$HC+NO_X$	CO	$HC+NO_X$	CO
Phase 1	2006	50	1.5	35	20.0	
	2007 and later	100	1.5	35	20.0	

(2) You may certify ATVs with engines that have total displacement of less than 100 cc to the exhaust emission standards in § 1051.615 instead of certifying them to the exhaust emission standards of this section. Count all such vehicles in the phase-in(percent) requirements of this section.

(b) The exhaust emission standards in this section apply for ATVs using the fuel type on which they are designed to operate. You must meet the numerical emission standards for hydrocarbons in this section based on the following types of hydrocarbon emissions for ATVs powered by the following fuels:

* * * * *

(c) Your ATVs must meet emission standards over their full useful life. For ATVs with engines that have total displacement of 100 cc or greater, the minimum useful life is 10,000 kilometers, 1000 hours of engine operation, or five years, whichever comes first. For ATVs with engines that have total displacement of less than 100 cc, the minimum useful life is 5,000 kilometers, 500 hours of engine operation, or five years, whichever comes first. You must specify a longer useful life for the engine family in terms of kilometers and hours if the average service life of your vehicles is longer than the minimum value, as follows:

* * * * *

■ 276. Section 1051.110 is amended by revising the introductory text and paragraph (a) to read as follows:

§ 1051.110 What evaporative emission standards must my vehicles meet?

Your new vehicles must meet the emission standards of this section over their full useful life. Note that § 1051.245 allows you to use design-based certification instead of generating new emission data.

(a) Beginning with the 2008 model year, permeation emissions from your vehicle's fuel tank(s) may not exceed 1.5 grams per square-meter per day when measured with the test procedures for tank permeation in subpart F of this part. You may generate or use emission credits under the averaging, banking, and trading (ABT) program, as describedin subpart H of this part.

* * * * *

■ 277. Section 1051.115 is amended by removing and reserving paragraph (b), revising paragraphs (a), (c), (f), and (g), and adding a new paragraph (d)(3)(vi) to read as follows:

§ 1051.115 What other requirements must my vehicles meet?

* * * * *

(a) *Closed crankcase.* Crankcase emissions may not be discharged directly into the ambient atmosphere from any vehicle throughout its useful life.

* * * * *

(c) *Adjustable parameters.* Vehicles that have adjustable parameters must meet all the requirements of this part for any adjustment in the physically adjustable range. Note that parameters that control the air-fuel ratio may be treated separately under paragraph (d) of this section. An operating parameter is not considered adjustable if you permanently sealit or if it is not normally accessible using ordinary tools. We may require that you set adjustable parameters to any specification within the adjustable range during any testing,including

certification testing, production-line testing, or in-use testing.

(d) * * *

(3) * * *

(vi) The adjustable range of carburetor screws, such as air screw, fuel screw, andidle-speed screw must be defined by stops, limits, or specification on the jetting chart consistent with the requirements for specifying jet sizes and needle configuration in this section.

* * * * *

(f) *Defeat devices.* You may not equip your vehicles with a defeat device. A defeat device is an auxiliary emission-control device that reduces the effectiveness of emission controls under conditions that the vehicle may reasonably be expected to encounter during normal operation and use. This does not apply to auxiliary emission-control devices you identify in your certification application if any of the following is true:

(1) The conditions of concern were substantially included in the applicable test procedures described in subpart F of this part.

(2) You show your design is necessary to prevent vehicle damage or accidents.

(3) The reduced effectiveness applies only to starting the engine.

(g) *Noise standards.* There are no noise standards specified in this part 1051. See 40 CFR Chapter I, Subchapter G, to determine if your vehicle must meet noise emission standards under another part of our regulations.

■ 278. Section 1051.120 is revised to read as follows:

§ 1051.120 What emission-related warranty requirements apply to me?

(a) *General requirements.* You must warrant to the ultimate purchaser and each subsequent purchaser that the new engine, including all parts of its emission-control system, meets two conditions:

(1) It is designed, built, and equipped so it conforms at the time of sale to the ultimate purchaser with the requirements of this part.

(2) It is free from defects in materials and workmanship that may keep it from meeting these requirements.

(b) *Warranty period.* Your emission-related warranty must be valid for at least 50 percent of the vehicle's minimum useful life in kilometers or hours of engine operation (where applicable), or at least 30 months, whichever comes first. You may offer an emission-related warranty more generous than we require. The emission-related warranty for the engine may not be shorter than any published warranty you offer without charge for the engine. Similarly, the emission-related warranty for any component may not be shorter than any published warranty you offer without charge for that component. If a vehicle has no odometer, base warranty periods in this paragraph (b) only on the vehicle's age (in years). The warranty period begins when the engine is placed into service.

(c) *Components covered.* The emission-related warranty covers all components whose failure would increase an engine's emissions of any pollutant. This includes components listed in 40 CFR part 1068, Appendix I, and components from any other system you develop to control emissions. The emission-related warranty covers these components even if another company produces the component. Your emission-related warranty does not cover components whose failure would not increase an engine's emissions of any pollutant.

(d) *Limited applicability.* You may deny warranty claims under this section if the operator caused the problem through improper maintenance or use, as described in 40CFR 1068.115. You may ask us to allow you to exclude from your emission-related warranty certified vehicles that have been used significantly for competition, especially certified motorcycles that meet at least four of the criteria in § 1051.620(b)(1).

(e) *Owners manual.* Describe in the owners manual the emission-related warranty provisions from this section that apply to the engine.

■ 279. Section 1051.125 is revised to read as follows:

§ 1051.125 What maintenance instructions must I give to buyers?

Give the ultimate purchaser of each new vehicle written instructions for properly maintaining and using the vehicle, including the emission-control system. The maintenance instructions also apply to service accumulation on your emission-data vehicles, as described in § 1051.240, § 1051.245, and 40 CFR part 1065.

(a) *Critical emission-related maintenance.* Critical emission-related maintenanceincludes any adjustment, cleaning, repair, or replacement of critical emission-related components. This may also include additional emission-related maintenance that you determine is critical if we approve it in advance. You may schedule critical emission-related maintenance on these components if you meet the following conditions:

(1) You demonstrate that the maintenance is reasonably likely to be done at the recommended intervals on in-use vehicles. We will accept scheduled maintenance as reasonably likely to occur if you satisfy any of the following conditions:

(i) You present data showing that, if a lack of maintenance increases emissions, it also unacceptably degrades the vehicle's performance.

(ii) You present survey data showing that at least 80 percent of vehicles in the field get the maintenance you specify at the recommended intervals.

(iii) You provide the maintenance free of charge and clearly say so in maintenanceinstructions for the customer.

(iv) You otherwise show us that the maintenance is reasonably likely to be done at the recommended intervals.

(2) You may not schedule critical emission-related maintenance within the minimum useful life period for aftertreatment devices, pulse-air valves, fuel injectors, oxygen sensors, electronic control units, superchargers, or turbochargers.

(b) *Recommended additional maintenance.* You may recommend any additional amount of maintenance on the components listed in paragraph (a) of this section, as long as you state clearly that these maintenance steps are not necessary to keep the emission-related warranty valid. If operators do the maintenance specified in paragraph (a) of this section, but not the recommended additional maintenance, this does not allow you to disqualifythose vehicles from in-use testing or deny a warranty claim. Do not take these maintenance steps during service accumulation on your emission-data vehicles.

(c) *Special maintenance.* You may specify more frequent maintenance to address problems related to special situations, such as atypical vehicle operation. You must clearly state that this additional maintenance is associated with the special situation you are addressing.

(d) *Noncritical emission-related maintenance.* You may schedule any amount of emission-related inspection or maintenance that is not covered by paragraph (a) of this section, as long as you state in the owners manual that these steps are not necessary to keep the emission-related warranty valid. If operators fail to do this maintenance, this does not allow you to disqualify those vehicles from in-use testing or deny a warranty claim. Do not take these inspection or maintenance steps during service accumulation on your emission-data vehicles.

(e) *Maintenance that is not emission-related.* For maintenance unrelated to emission controls, you may schedule any amount of inspection or maintenance. You may also takethese

inspection or maintenance steps during service accumulation on your emission-data vehicles, as long as they are reasonable and technologically necessary. This mightinclude adding engine oil, changing air, fuel, or oil filters, servicing engine-cooling systems, and adjusting idle speed, governor, engine bolt torque, valve lash, or injector lash, or adjusting chain tension, clutch position, or tire pressure. You may perform this nonemission-related maintenance on emission-data vehicles at the least frequent intervalsthat you recommend to the ultimate purchaser (but not the intervals recommended for severe service). You may also visually inspect test vehicles or engines, including emission-related components, as needed to ensure safe operation.

(f) *Source of parts and repairs.* State clearly on the first page of your written maintenanceinstructions that a repair shop or person of the owner's choosing may maintain, replace, or repair emission-control devices and systems. Your instructions may not require components or service identified by brand, trade, or corporate name. Also, do not directly or indirectly condition your warranty on a requirement that the vehicle be serviced by your franchised dealers or any other service establishments with which you have a commercial relationship. You may disregard the requirements in this paragraph (f) if you do one of two things:

(1) Provide a component or service without charge under the purchase agreement.

(2) Get us to waive this prohibition in the public's interest by convincing us the vehicle will work properly only with the identified component or service.

(g) *Payment for scheduled maintenance.* Owners are responsible for properly maintainingtheir vehicles. This generally includes paying for scheduled maintenance. However, manufacturers must pay for scheduled maintenance during the useful life if it meets allthe following criteria:

(1) Each affected component was not in general use on similar vehicles before the 2006 model year.

(2) The primary function of each affected component is to reduce emissions.

(3) The cost of the scheduled maintenance is more than 2 percent of the price of the vehicle.

(4) Failure to perform the maintenance would not cause clear problems that would significantly degrade the vehicle's performance.

(h) *Owners manual.* Explain the owner's responsibility for proper maintenance in the owners manual.

■ 280. Section 1051.130 is revised to read as follows:

§ 1051.130 What installation instructions must I give to vehicle manufacturers?

(a) If you sell an engine for someone else to install in a piece of nonroad equipment, givethe engine installer instructions for installing it consistent with the requirements of this part. Include all information necessary to ensure that an engine will be installed in its certified configuration.

(b) Make sure these instructions have the following information:

(1) Include the heading: ''Emission-related installation instructions''.

(2) State: ''Failing to follow these instructions when installing a certified engine in a piece of nonroad equipment violates federal law (40 CFR 1068.105(b)), subject to fines or other penalties as described in the Clean Air Act.''.

(3) Describe the instructions needed to properly install the exhaust system and any other components. Include instructions consistent with the requirements of § 1051.205(r).

(4) Describe the steps needed to comply with the evaporative emission standards in § 1051.110.

(5) Describe any limits on the range of applications needed to ensure that the engine operates consistently with your application for certification. For example, if your engines are certified only to the snowmobile standards, tell vehicle manufacturers notto install the engines in other vehicles.

(6) Describe any other instructions to make sure the installed engine will operate according to design specifications in your application for certification. This mayinclude, for example, instructions for installing aftertreatment devices when installing the engines.

(7) State: ''If you install the engine in a way that makes the engine's emission controlinformation label hard to read during normal engine maintenance, you must place a duplicate label on the vehicle, as described in 40 CFR 1068.105.''.

(c) You do not need installation instructions for engines you install in your own vehicles.

(d) Provide instructions in writing or in an equivalent format. For example, you may post instructions on a publicly available Web site for downloading or printing. If you do not provide the instructions in writing, explain in your application for certification how you will ensure that each installer is informed of the installation requirements.

■ 281. Section 1051.135 is revised to read as follows:

§ 1051.135 How must I label and identify the vehicles I produce?

Each of your vehicles must have three labels: a vehicle identification number as described in paragraph (a) of this section, an emission control information label as described in paragraphs (b) through (e) of this section, and a consumer information label as describedin § 1051.137.

(a) Assign each vehicle a unique identification number and permanently affix, engrave, or stamp it on the vehicle in a legible way.

(b) At the time of manufacture, affix a permanent and legible emission control information label identifying each vehicle. The label must be

(1) Attached so it is not removable without being destroyed or defaced.

(2) Secured to a part of the vehicle (or engine) needed for normal operation and not normally requiring replacement.

(3) Durable and readable for the vehicle's entire life.

(4) Written in English.

(c) The label must—

(1) Include the heading ''EMISSION CONTROL INFORMATION''.

(2) Include your full corporate name and trademark. You may identify another company and use its trademark instead of yours if you comply with the provisions of § 1051.645.

(3) Include EPA's standardized designation for engine families, as described in § 1051.230.

(4) State the engine's displacement (in liters). You may omit this from the emission control information label if the vehicle is permanently labeled with a unique model name that corresponds to a specific displacement. Also, you may omit displacement from the label if all the engines in the engine family have the same per-cylinder displacement and total displacement.

(5) State: ''THIS VEHICLE IS CERTIFIED TO OPERATE ON [specify operating fuel or fuels].''.

(6) State the date of manufacture [MONTH and YEAR]. You may omit this from the label if you keep a record of the engine-manufacture dates and provide it to us upon request, or if you stamp the date on the engine or vehicle.

(7) State the exhaust emission standards or FELs to which the vehicles are certified.

(8) Identify the emission-control system. Use terms and abbreviations consistent withSAE J1930 (incorporated by reference in § 1051.810). You may omit this information from the label if

there is not enough room for it and you put it in the owners manualinstead.

(9) List specifications and adjustments for engine tuneups; show the proper position for the transmission during tuneup and state which accessories should be operating.

(10) Identify the fuel type and any requirements for fuel and lubricants. You may omit this information from the label if there is not enough room for it and you put it in the owners manual instead.

(11) State the useful life for your engine family if it is different than the minimum value.

(12) State: ''S VEHICLE MEETS U.S. EPA REGULATIONS FOR [MODEL YEAR] [SNOWMOBILES or OFF-ROAD MOTORCYCLES or ATVs or OFFROAD UTILITY VEHICLES].''.

(d) You may add information to the emission control information label to identify other emission standards that the vehicle meets or does not meet (such as California standards). You may also add other information to ensure that the engine will be properly maintained and used.

(e) You may ask us to approve modified labeling requirements in this part 1051 if you show that it is necessary or appropriate. We will approve your request if your alternate label is consistent with the requirements of this part.

(f) If you obscure the engine label while installing the engine in the equipment such thatthe label will be hard to read during normal maintenance, you must place a duplicate label on the equipment. If others install your engine in their equipment in a way that obscuresthe engine label, we require them to add a duplicate label on the equipment (see 40 CFR 1068.105); in that case, give them the number of duplicate labels they request and keepthe following records for at least five years:

(1) Written documentation of the request from the equipment manufacturer.

(2) The number of duplicate labels you send and the date you sent them.

(g) Label every vehicle certified under this part with a removable hang-tag showing its emission characteristics relative to other models, as described in § 1051.137.

■ 282. A new § 1051.137 is added to read as follows:

§ 1051.137 What are the consumer labeling requirements?

Label every vehicle certified under this part with a removable hang-tag showing its emission characteristics relative to other models. The label should be attached securely to the vehicle before it is offered for sale in such a manner that it would not be accidentally removed prior to sale. Use the applicable equations of this section to determine the normalized emission rate (NER) from the FEL for your vehicle. If the vehicle is certified without using the averaging provisions of subpart H, use the final deteriorated emission level. Round the resulting normalized emission rate for your vehicle to one decimal place. If the calculated NER value is less than zero, consider NER to be zero for that vehicle. We may specify a standardized format for labels. At a minimum, the tag should include: the manufacturer's name, vehicle model name, engine description (500 cc two-stroke with DFI), the NER, and a brief explanation of the scale (for example, note that 0 is the cleanest and 10 is the least clean).

(a) For snowmobiles, use the following equation:

$$NER = 16.61 \times \log(2.667 \times HC + CO) - 38.22$$

Where:

HC and CO are the cycle-weighted FELs (or emission rates) for hydrocarbons and carbon monoxide in g/kW-hr.

(b) For off-highway motorcycles, use the following equations:

(1) For off-highway motorcycles certified to the standards in § 1051.105, use one of the equations specified below.

(i) If the vehicle has HC + NO_X emissions less than or equal to 2.0 g/km, use the following equation:

$$NER = 2.500 \times (HC+NO_X)$$

Where:

$HC+NO_X$ is the FEL (or the sum of the cycle-weighted emission rates) for hydrocarbons and oxides of nitrogen in g/km.

(ii) If the vehicle has HC + NO_X emissions greater than 2.0 g/km, use the following equation:

$$NER = 5.000 \times \log(HC+NO_X) + 3.495$$

Where:

$HC+NO_X$ is the FEL (or the sum of the cycle-weighted emission rates) for hydrocarbons and oxides of nitrogen in g/km.

(2) For off-highway motorcycles certified to the standards in § 1051.615(b), use the following equation:

$$NER = 8.782 \times \log(HC+NO_X) - 5.598$$

Where:

$HC+NO_X$ is the FEL (or the sum of the cycle-weighted emission rates) for hydrocarbons and oxides of nitrogen in g/kW-hr.

(c) For ATVs, use the following equations:

(1) For ATVs certified to the standards in § 1051.107, use one of the equations specified below.

(i) If the vehicle has HC + NO_X emissions less than or equal to 1.5 g/km, use the following equation:

$$NER = 3.333 \times (HC+NO_X)$$

Where:

$HC+NO_X$ is the FEL (or the sum of the cycle-weighted emission rates) for hydrocarbons and oxides of nitrogen in g/km.

(ii) If the vehicle has HC + NO_X emissions greater than 1.5 g/km, use the following equation:

$$NER = 4.444 \times \log(HC+NO_X) + 4.217$$

Where:

$HC+NO_X$ is the FEL (or the sum of the cycle-weighted emission rates) for hydrocarbons and oxides of nitrogen in g/km.

(2) For ATVs certified to the standards in § 1051.615(a), use the following equation:

$$NER = 8.782 \times \log(HC + NO_X) - 7.277$$

Where:

$HC+NO_X$ is the FEL (or the sum of the cycle-weighted emission rates) for hydrocarbons and oxides of nitrogen in g/kW-hr.

■ 283. Section 1051.145 is amended by removing and reserving paragraph (c), revising paragraphs (a)(3)(iv), (a)(4), (b)(1) before the table, (b)(3), (e), and (g), and adding paragraphs (a)(3)(v), (a)(3)(vi), and (h) to read as follows:

§ 1051.145 What provisions apply only for a limited time?

* * * * *

(a) * * *

(3) * * *

(iv) Show that fewer than 50 percent of the engine family's total sales in the United States are used in recreational vehicles regulated under this part. This includes engines used in any application, without regard to which company manufactures the vehicle or equipment.

(v) If your engines do not meet the criteria listed in paragraph (a) of this section, they will be subject to the provisions of this part. Introducing these engines into commerce without a valid exemption or certificate of conformity violates the prohibitions in 40 CFR 1068.101.

(vi) Engines exempted under this paragraph (a)(3) are subject to all the requirements affecting engines under 40 CFR part 90. The requirements and restrictions of 40 CFR part 90 apply to anyone manufacturing these engines, anyone manufacturing equipment that

uses these engines, and all other persons in the same manner as other engines subject to 40 CFR part 90.

(4) All vehicles produced under this paragraph (a) must be labeled according to our specifications. The label must include the following:

(i) The heading ''EMISSION CONTROL INFORMATION''.

(ii) Your full corporate name and trademark.

(iii) A description of the provisions under which this section applies to your vehicle .

(iv) Other information that we specify to you in writing.

(b) * * *

(1) Follow Table 1 of this section for exhaust emission standards, while meeting all the other requirements of § 1051.107. You may use emission credits to show compliance with these standards (see subpart H of this part). You may not exchange emission credits with engine families meeting the standards in § 1051.107(a). You may also not exchange credits between engine families certified to the standards for engines above 225 cc and engine families certified to the standards for engines below 225 cc. The phase-in percentages in the table specify the percentage of your total U.S.-directed production that must comply with the emission standards for those model years (i.e., the percentage requirement does not apply separately for engine families above and below 225 cc). Table 1 follows:

* * * * *

(3) For ATVs certified to the standards in this paragraph (b), use the following equations to determine the normalized emission rate required by § 1051.137:

(i) For engines at or above 225 cc, use the following equation:

$$NER = 9.898 \times \log (HC + NO_X) - 4.898$$

Where:

$HC + NO_X$ is the sum of the cycle-weighted emission rates for hydrocarbons and oxides of nitrogen in g/kW-hr.

(ii) For engines below 225 cc, use the following equation:

$$NER = 9.898 \times \log [(HC+NO_X)\ 0.83] - 4.898$$

Where:

$HC + NO_X$ is the sum of the cycle-weighted emission rates for hydrocarbons and oxides of nitrogen in g/kW-hr.

* * * * *

(e) *Raw sampling procedures.* Using good engineering judgment, you may use the alternate raw-sampling procedures instead of the procedures described in 40 CFR part 1065 for emission testing certain vehicles, as follows:

(1) *Snowmobile.* You may use the raw sampling procedures described in 40 CFR part 90 or 91 for snowmobiles before the 2010 model year.

(2) *ATV.* You may use the raw sampling procedures described in 40 CFR part 90 or 91 for ATVs certified to the standards in § 1051.615 before the 2011 model year. You may use these raw sampling procedures for ATVs certified to the standards in § 1051.107 or § 1051.145(b) before the 2009 model year.

* * * * *

(g) *Pull-ahead option for permeation emissions.* Manufacturers choosing to comply with an early tank permeation standard of 3.0 g/m²/day prior to model year 2008 may be allowed to delay compliance with the 1.5 g/m²/day standard by earning credits, as follows:

(1) Calculate earned credits using the following equation:

$$Credit = (Baseline\ emissions - Pull\text{-}ahead\ level) \times [\Sigma_i(Production)_i \times (UL)_i]$$

Where:

Baseline emissions = the baseline emission rate, as determined in paragraph (g)(2) of this section.

Pull-ahead level = the permeation level to which you certify the tank, which must be at or below 3.0 g/m²/day.

$(Production)_i$ = the annual production volume of vehicles in the engine family for model year ''i'' times the average internal surface area of the vehicles' fuel tanks.

$(UL)_i$ = The useful life of the engine family in model year ''i''.

(2) Determine the baseline emission level for calculating credits using any of the following values:

(i) 7.6 g/m²/day.

(ii) The emission rate measured from your lowest-emitting, uncontrolled fuel tank from the current or previous model year using the procedures in § 1051.515. For example, this would generally involve the fuel tank with the greatest wall thickness for a given material.

(iii) The emission rate measured from an uncontrolled fuel tank that is the same as or most similar to the model you have used during the current or previous model year. However, you may use this approach only if you use it to establish a baseline emission level for each unique tank model you produce using the procedures in § 1051.515.

(3) Pull-ahead tanks under this option must be certified and must meet all applicable requirements other than those limited to compliance with the exhaust standards.

(4) You may use credits generated under this paragraph (g) as specified in subpart H of this part.

(h) *Deficit credits for permeation standards.* For 2008 through 2010 model years, you may have a negative balance of emission credits relative to the permeation emission standards at the end of each model year, subject to the following provisions:

(1) You must eliminate any credit deficit we allow under this paragraph (h) by the end of the 2011 model year. If you are unable to eliminate your credit deficit by the end of the 2011 model year, we may void the certificates for all families certified to FELs above the allowable average, for all affected model years.

(2) State in your application for certification a statement whether you will have a negative balance of permeation emission credits for that model year. If you project that you will have a negative balance, estimate the credit deficit for each affected model year and present a detailed plan to show where and when you will get credits to offset the deficit by the end of the 2011 model year.

(3) In your end-of-year report under § 1051.730, state whether your credit deficit is larger or smaller than you projected in your application for certification. If the deficit is larger than projected, include in your end-of-year report an update to your detailed plan to show how you will eliminate the credit deficit by the end of the 2011 model year.

■ 284. Section 1051.201 is revised to read as follows:

§ 1051.201 What are the general requirements for obtaining a certificate of conformity?

(a) You must send us a separate application for a certificate of conformity for each engine family. A certificate of conformity is valid from the indicated effective date until December 31 of the model year for which it is issued.

(b) The application must contain all the information required by this part and must not include false or incomplete statements or information (see § 1051.255).

(c) We may ask you to include less information than we specify in this subpart, as long as you maintain all the information required by § 1051.250.

(d) You must use good engineering judgment for all decisions related to your application (see 40 CFR 1068.5).

(e) An authorized representative of your company must approve and sign the application.

(f) See § 1051.255 for provisions describing how we will process your application.

(g) We may require you to deliver your test vehicles or engines to a facility we designate for our testing (see § 1051.235(c)).

■ 285. Section 1051.205 is revised to read as follows:

§ 1051.205 What must I include in my application?

This section specifies the information that must be in your application, unless we ask you to include less information under § 1051.201(c). We may require you to provide additional information to evaluate your application.

(a) Describe the engine family's specifications and other basic parameters of the vehicle's design and emission controls. List the fuel type on which your engines are designed to operate (for example, gasoline, liquefied petroleum gas, methanol, or natural gas). List vehicle configurations and model names that are included in the engine family.

(b) Explain how the emission-control system operates. Describe the evaporative emission controls. Also describe in detail all system components for controlling exhaust emissions, including all auxiliary-emission control devices (AECDs) and all fuel-system components you will install on any production or test vehicle or engine. Identify the part number of each component you describe. For this paragraph (b), treat as separate AECDs any devices that modulate or activate differently from each other. Include all the following:

(1) Give a general overview of the engine, the emission-control strategies, and all AECDs.

(2) Describe each AECD's general purpose and function.

(3) Identify the parameters that each AECD senses (including measuring, estimating, calculating, or empirically deriving the values). Include vehicle-based parameters and state whether you simulate them during testing with the applicable procedures.

(4) Describe the purpose for sensing each parameter.

(5) Identify the location of each sensor the AECD uses.

(6) Identify the threshold values for the sensed parameters that activate the AECD.

(7) Describe the parameters that the AECD modulates (controls) in response to any sensed parameters, including the range of modulation for each parameter, the relationship between the sensed parameters and the controlled parameters and how the modulation achieves the AECD's stated purpose. Use graphs and tables, as necessary.

(8) Describe each AECD's specific calibration details. This may be in the form of data tables, graphical representations, or some other description.

(9) Describe the hierarchy among the AECDs when multiple AECDs sense or modulate the same parameter. Describe whether the strategies interact in a comparative or additive manner and identify which AECD takes precedence in responding, if applicable.

(10) Explain the extent to which the AECD is included in the applicable test procedures specified in subpart F of this part.

(11) Do the following additional things for AECDs designed to protect engines or vehicles:

(i) Identify the engine and/or vehicle design limits that make protection necessary and describe any damage that would occur without the AECD.

(ii) Describe how each sensed parameter relates to the protected components' design limits or those operating conditions that cause the need for protection.

(iii) Describe the relationship between the design limits/parameters being protected and the parameters sensed or calculated as surrogates for those design limits/parameters, if applicable.

(iv) Describe how the modulation by the AECD prevents engines and/or equipment from exceeding design limits.

(v) Explain why it is necessary to estimate any parameters instead of measuring them directly and describe how the AECD calculates the estimated value, if applicable.

(vi) Describe how you calibrate the AECD modulation to activate only during conditions related to the stated need to protect components and only as needed to sufficiently protect those components in a way that minimizes the emissionimpact.

(c) [Reserved]

(d) Describe the vehicles or engines you selected for testing and the reasons for selecting them.

(e) Describe the test equipment and procedures that you used, including any special or alternate test procedures you used (see § 1051.501).

(f) Describe how you operated the emission-data vehicle before testing, including the duty cycle and the extent of engine operation used to stabilize emission levels. Explain why you selected the method of service accumulation. Describe any scheduled maintenance you did.

(g) List the specifications of the test fuel to show that it falls within the required ranges we specify in 40 CFR part 1065.

(h) Identify the engine family's useful life.

(i) Include the maintenance instructions you will give to the ultimate purchaser of each new vehicle (see § 1051.125).

(j) Include the emission-related installation instructions you will provide if someone else installs your engines in a vehicle (see § 1051.130).

(k) Describe the labels you create to meet the requirements of § 1051.135.

(l) Identify the exhaust emission standards or FELs to which you are certifying engines in the engine family.

(m) Identify the engine family's deterioration factors and describe how you developed them (see § 1051.243 and § 1051.245). Present any emission test data you used for this.

(n) State that you operated your emission-data vehicles as described in the application (including the test procedures, test parameters, and test fuels) to show you meet the requirements of this part.

(o) Present emission data to show that you meet emission standards, as follows:

(1) Present emission data for hydrocarbons (such as NMHC or THCE, as applicable), NO_X, and CO on an emission-data vehicle to show your vehicles meet the applicable exhaust emission standards we specify in subpart B of this part. Show emission figures before and after applying deterioration factors for each pollutant and for each vehicle or engine. If we specify more than one grade of any fuel type (for example, a summer grade and winter grade of gasoline), you need to submit test data only for one grade, unless the regulations of this part specify otherwise for your engine.

(2) Present evaporative test data for hydrocarbons to show your vehicles meet the evaporative emission standards we specify in subpart B of this part. Show emission figures before and after applying deterioration factors for each vehicle or engine, where applicable. If you did not perform the testing, identify the source of the test data.

(3) Note that § 1051.235 and § 1051.245 allow you to submit an application in certain cases without new emission data.

(p) Report all test results, including those from invalid tests or from any other tests, whether or not they were conducted according to the test procedures of subpart F of this part. If you measure CO_2, report those emission levels. We may ask you to send other information to confirm that your tests

were valid under the requirements of this part and 40 CFR part 1065.

(q) Describe all adjustable operating parameters (see § 1051.115(e)), including production tolerances. Include the following in your description of each parameter:

(1) The nominal or recommended setting.

(2) The intended physically adjustable range.

(3) The limits or stops used to establish adjustable ranges.

(4) Information showing why the limits, stops, or other means of inhibiting adjustment are effective in preventing adjustment of parameters on in-use engines to settings outside your intended physically adjustable ranges.

(r) Confirm that your emission-related installation instructions specify how to ensure that sampling of exhaust emissions will be possible after engines are installed in equipment and placed in service. If this cannot be done by simply adding a 20-centimeter extension to the exhaust pipe, show how to sample exhaust emissions in a way that prevents diluting the exhaust sample with ambient air.

(s) Unconditionally certify that all the vehicles and/or engines in the engine family comply with the requirements of this part, other referenced parts of the CFR, and the Clean Air Act.

(t) Include estimates of U.S.-directed production volumes.

(u) Include the information required by other subparts of this part. For example, include the information required by § 1051.725 if you participate in the ABT program.

(v) Include other applicable information, such as information specified in this part or 40 CFR part 1068 related to requests for exemptions.

(w) Name an agent for service of process located in the United States. Service on this agent constitutes service on you or any of your officers or employees for any action by EPA or otherwise by the United States related to the requirements of this part.

■ 286. Section 1051.210 is revised to read as follows:

§ 1051.210 May I get preliminary approval before I complete my application?

If you send us information before you finish the application, we will review it and make any appropriate determinations, especially for questions related to engine family definitions, auxiliary emission-control devices, deterioration factors, testing for service accumulation, and maintenance. Decisions made under this section are considered to be preliminary approval, subject to final review and approval. We will generally not reverse a decision where we have given you preliminary approval, unless we find newinformation supporting a different decision. If you request preliminary approval related to the upcoming model year or the model year after that, we will make best-efforts to make the appropriate determinations as soon as practicable. We will generally not provide preliminary approval related to a future model year more than two years ahead of time.

§ 1051.215 [Removed]

■ 287. Section 1051.215 is removed.

■ 288. Section 1051.220 is revised to read as follows:

§ 1051.220 How do I amend the maintenance instructions in my application?

You may amend your emission-related maintenance instructions after you submit your application for certification, as long as the amended instructions remain consistent with the provisions of § 1051.125. You must send the Designated Compliance Officer a request to amend your application for certification for an engine family if you want to change the emission-related maintenance instructions in a way that could affect emissions. In your request, describe the proposed changes to the maintenance instructions. We will disapprove your request if we determine that the amended instructions are inconsistent with maintenance you performed on emission-data vehicles.

(a) If you are decreasing the specified maintenance, you may distribute the new maintenance instructions to your customers 30 days after we receive your request, unless we disapprove your request. We may approve a shorter time or waive this requirement.

(b) If your requested change would not decrease the specified maintenance, you may distribute the new maintenance instructions anytime after you send your request. For example, this paragraph (b) would cover adding instructions to increase the frequency of a maintenance step for engines in severe-duty applications.

(c) You need not request approval if you are making only minor corrections (such as correcting typographical mistakes), clarifying your maintenance instructions, or changing instructions for maintenance unrelated to emission control.

■ 289. Section 1051.225 is revised to read as follows:

§ 1051.225 How do I amend my application for certification to include new or modified vehicles or to change an FEL?

Before we issue you a certificate of conformity, you may amend your application to include new or modified vehicle configurations, subject to the provisions of this section. After we have issued your certificate of conformity, you may send us an amended application requesting that we include new or modified vehicle configurations within the scope of the certificate, subject to the provisions of this section. You must amend your application if any changes occur with respect to any information included in your application.

(a) You must amend your application before you take any of the following actions:

(1) Add a vehicle (that is, an additional vehicle configuration) to an engine family. In this case, the vehicle added must be consistent with other vehicles in the engine family with respect to the criteria listed in § 1051.230.

(2) Change a vehicle already included in an engine family in a way that may affect emissions, or change any of the components you described in your application for certification. This includes production and design changes that may affect emissions any time during the engine's lifetime.

(3) Modify an FEL for an engine family, as described in paragraph (f) of this section.

(b) To amend your application for certification, send the Designated Compliance Officer the following information:

(1) Describe in detail the addition or change in the vehicle model or configuration you intend to make.

(2) Include engineering evaluations or data showing that the amended engine family complies with all applicable requirements. You may do this by showing that the original emission-data vehicle is still appropriate with respect to showing compliance of the amended family with all applicable requirements.

(3) If the original emission-data vehicle for the engine family is not appropriate to show compliance for the new or modified vehicle, include new test data showing that the new or modified vehicle meets the requirements of this part.

(c) We may ask for more test data or engineering evaluations. You must give us these within 30 days after we request them.

(d) For engine families already covered by a certificate of conformity, we will determine whether the existing certificate of conformity covers your

new or modified vehicle. You may ask for a hearing if we deny your request (see § 1051.820).

(e) For engine families already covered by a certificate of conformity, you may start producing the new or modified vehicle anytime after you send us your amended application, before we make a decision under paragraph (d) of this section. However, if we determine that the affected vehicles do not meet applicable requirements, we will notify you to cease production of the vehicles and may require you to recall the vehicles at no expense to the owner. Choosing to produce vehicles under this paragraph (e) is deemed to be consent to recall all vehicles that we determine do not meet applicable emission standards or other requirements and to remedy the nonconformity at no expense to the owner. If you do not provide information required under paragraph (c) of this section within 30 days, you must stop producing the new or modified vehicles.

(f) You may ask to change your FEL in the following cases:

(1) You may ask to raise your FEL for your engine family after the start of production. You must use the higher FEL for the entire family to calculate your average emission level under subpart H of this part. In your request, you must demonstrate that you will still be able to comply with the applicable average emission standards as specified in subparts B and H of this part.

(2) You may ask to lower the FEL for your engine family after the start of production only when you have test data from production vehicles indicating that your vehicles comply with the lower FEL. You may create a separate subfamily with the lower FEL. Otherwise, you must use the higher FEL for the family to calculate your average emission level under subpart H of this part.

(3) If you change the FEL during production, you must include the new FEL on the emission control information label for all vehicles produced after the change.

■ 290. Section 1051.230 is revised to read as follows:

§ 1051.230 How do I select engine families?

(a) Divide your product line into families of vehicles that are expected to have similar emission characteristics throughout the useful life. Except as specified in paragraph (f) of this section, you must have separate engine families for meeting exhaust and evaporative emissions. Your engine family is limited to a single model year.

(b) For exhaust emissions, group vehicles in the same engine family if they are the samein all the following aspects:

(1) The combustion cycle.

(2) The cooling system (liquid-cooled vs. air-cooled).

(3) Configuration of the fuel system (for example, port fuel injection vs. carburetion).

(4) Method of air aspiration.

(5) The number, location, volume, and composition of catalytic converters.

(6) Type of fuel.

(7) The number, arrangement, and approximate bore diameter of cylinders.

(8) Numerical level of the emission standards that apply to the vehicle.

(c) For evaporative emissions, group vehicles in the same engine family if fuel tanks are similar and fuel lines are similar considering all the following aspects:

(1) Type of material (including additives such as pigments, plasticizers, and UV inhibitors).

(2) Emission-control strategy.

(3) Production methods. This does not apply to differences in production methods that would not affect emission characteristics.

(d) You may subdivide a group of vehicles that is identical under paragraph (b) or (c) of this section into different engine families if you show the expected emission characteristics are different during the useful life.

(e) You may group vehicles that are not identical with respect to the things listed in paragraph (b) or (c) of this section in the same engine family, as follows:

(1) You may group such vehicles in the same engine family if you show that their emission characteristics during the useful life will be similar.

(2) If you are a small-volume manufacturer, you may group engines from any vehicles subject to the same emission standards into a single engine family. This does not change any of the requirements of this part for showing that an engine family meets emission standards.

(f) You may divide your product line into engine families based on a combined consideration of exhaust and evaporative emission-control systems, consistent with the requirements of this section. This would allow you to use a single engine-family designation for each engine family instead of having separate engine-family designations for exhaust and evaporative emission-control systems for each model.

(g) Select test engines from the engine family as described in 40 CFR 1065.401. Select test components related to evaporative emission-control systems that are most likely to exceed the applicable emission standards. For example, select a fuel tank with the smallest average wall thickness (or barrier thickness, as appropriate) of those tanks you include in the same family.

■ 291. Section 1051.235 is revised to read as follows:

§ 1051.235 What emission testing must I perform for my application for a certificate of conformity?

This section describes the emission testing you must perform to show compliance with the emission standards in subpart B of this part.

(a) Test your emission-data vehicles using the procedures and equipment specified in subpart F of this part. Where specifically required or allowed, test the engine instead of the vehicle. For evaporative emissions, test the fuel system components separate from the vehicle.

(b) Select from each engine family an emission-data vehicle, and a fuel system for each fuel type with a configuration that is most likely to exceed the emission standards, using good engineering judgment. Consider the emission levels of all exhaust constituents over the full useful life of the vehicle.

(c) We may measure emissions from any of your test vehicles or engines (or any other vehicles or engines from the engine family), as follows:

(1) We may decide to do the testing at your plant or any other facility. If we do this, you must deliver the test vehicle or engine to a test facility we designate. The test vehicle or engine you provide must include appropriate manifolds, aftertreatment devices, electronic control units, and other emission-related components not normally attached directly to the engine block. If we do the testing at your plant, you must schedule it as soon as possible and make available the instruments, personnel, and equipment we need.

(2) If we measure emissions on one of your test vehicles or engines, the results of thattesting become the official emission results. Unless we later invalidate these data, we may decide not to consider your data in determining if your engine family meets applicable requirements.

(3) Before we test one of your vehicles or engines, we may set its adjustable parameters to any point within the physically adjustable ranges (see § 1051.115(c)).

(4) Before we test one of your vehicles or engines, we may calibrate it within normal production tolerances for

anything we do not consider an adjustable parameter.

(d) You may use previously generated emission data in the following cases:

(1) You may ask to use emission data from a previous model year instead of doing new tests, but only if all the following are true:

(i) The engine family from the previous model year differs from the current engine family only with respect to model year.

(ii) The emission-data vehicle from the previous model year remains the appropriate emission-data vehicle under paragraph (b) of this section.

(iii) The data show that the emission-data vehicle would meet all the requirementsthat apply to the engine family covered by the application for certification.

(2) You may submit emission data for equivalent engine families performed to show compliance with other standards (such as California standards) instead of doing newtests, but only if the data show that the test vehicle or engine would meet all of this part's requirements.

(3) You may submit evaporative emission data measured by a fuel system supplier.We may require you to verify that the testing was conducted in accordance with the applicable regulations.

(e) We may require you to test a second vehicle or engine of the same or different configuration in addition to the vehicle or engine tested under paragraph (b) of this section.

(f) If you use an alternate test procedure under 40 CFR 1065.10 and later testing showsthat such testing does not produce results that are equivalent to the procedures specifiedin subpart F of this part, we may reject data you generated using the alternate procedure.

(g) If you are a small-volume manufacturer, you may certify by design on the basis of preexisting exhaust emission data for similar technologies and other relevant information, and in accordance with good engineering judgment. In those cases, you are not requiredto test your vehicles. This is called ''design-certification'' or ''certifying by design.'' To certify by design, you must show that the technology used on your engines is sufficiently similar to the previously tested technology that a person reasonably familiar with emission-control technology would believe that your engines will comply with the emission standards.

(h) For fuel tanks that are certified based on permeability treatments for plastic fueltanks, you do not need to test each engine family. However, you must use good engineering judgment to determine permeation rates for the tanks. This requires that more than one fuel tank be tested for each set of treatment conditions. You may not usetest data from a given tank for any other tanks that have thinner walls. You may, however, use test data from a given tank for other tanks that have thicker walls. This applies to both low-hour (i.e., baseline testing) and durability testing. Note that § 1051.245 allows you to use design-based certification instead of generating new emission data.

■ 292. Section 1051.240 is revised to read as follows:

§ 1051.240 How do I demonstrate that my engine family complies with exhaust emission standards?

(a) For purposes of certification, your engine family is considered in compliance with the applicable numerical exhaust emission standards in subpart B of this part if all emission-data vehicles representing that family have test results showing deteriorated emission levels at or below these standards. (Note: if you participate in the ABT program in subpart H of this part, your FELs are considered to be the applicable emission standards with which you must comply.)

(b) Your engine family is deemed not to comply if any emission-data vehicle representing that family has test results showing a deteriorated emission level above an applicable FEL or emission standard from subpart B of this part for any pollutant.

(c) To compare emission levels from the emission-data vehicle with the applicable emission standards, apply deterioration factors to the measured emission levels. Section 1051.243 specifies how to test your vehicle to develop deterioration factors that representthe deterioration expected in emissions over your vehicle's full useful life. Your deterioration factors must take into account any available data from in-use testing with similar engines. Small-volume manufacturers may use assigned deterioration factors that we establish. Apply deterioration factors as follows:

(1) For vehicles that use aftertreatment technology, such as catalytic converters, use a multiplicative deterioration factor for exhaust emissions. A multiplicative deterioration factor for a pollutant is the ratio of exhaust emissions at the end of the useful life and exhaust emissions at the low-hour test point. In these cases, adjust the official emission results for each tested vehicle or engine at the selected test point by multiplying the measured emissions by the deterioration factor. If the factor is lessthan one, use one. Multiplicative deterioration factors must be specified to three significant figures.

(2) For vehicles that do not use aftertreatment technology, use an additive deterioration factor for exhaust emissions. An additive deterioration factor for a pollutant is the difference between exhaust emissions at the end of the useful life and exhaust emissions at the low-hour test point. In these cases, adjust the official emission results for each tested vehicle or engine at the selected test point by addingthe factor to the measured emissions. If the factor is less than zero, use zero.Additive deterioration factors must be specified to one more decimal place than the applicable standard.

(d) Collect emission data using measurements to one more decimal place than the applicable standard. Apply the deterioration factor to the official emission result, as described in paragraph (c) of this section, then round the adjusted figure to the same number of decimal places as the emission standard. Compare the rounded emission levels to the emission standard for each emission-data vehicle. In the case of $HC+NO_X$ standards, add the emission results and apply the deterioration factor to the sum of the pollutants before rounding. However, if your deterioration factors are based on emission measurements that do not cover the vehicle's full useful life, apply the deterioration factor to each pollutant and then add the results before rounding.

■ 293. A new § 1051.243 is added to read as follows:

§ 1051.243 How do I determine deterioration factors from exhaust durability testing?

Establish deterioration factors to determine whether your engines will meet emission standards for each pollutant throughout the useful life, as described in subpart B of this part and § 1051.240. This section describes how to determine deterioration factors, either with pre-existing test data or with new emission measurements.

(a) You may ask us to approve deterioration factors for an engine family based on emission measurements from similar vehicles or engines if you have already given usthese data for certifying other vehicles in the same or earlier model years. Use good engineering judgment to decide whether the two vehicles or engines are similar. We will approve your request if you show us that the emission measurements from other vehicles or engines reasonably represent in-use deterioration for the engine family for

which you have not yet determined deterioration factors.

(b) If you are unable to determine deterioration factors for an engine family under paragraph (a) of this section, select vehicles, engines, subsystems, or components for testing. Determine deterioration factors based on service accumulation and related testingto represent the deterioration expected from in-use vehicles over the full useful life, as follows:

(1) You must measure emissions from the emission-data vehicle at a low-hour test point and the end of the useful life. You may also test at evenly spaced intermediate points.

(2) Operate the vehicle or engine over a representative duty cycle for a period at least as long as the useful life (in hours or kilometers). You may operate the vehicle or engine continuously.

(3) You may perform maintenance on emission-data vehicles as described in § 1051.125 and 40 CFR part 1065, subpart E.

(4) If you measure emissions at only two points to calculate your deterioration factor, base your calculations on a linear relationship connecting these two data points for each pollutant. If you measure emissions at three or more points, use a linear least-squares fit of your test data for each pollutant to calculate your deterioration factor.

(5) Use good engineering judgment for all aspects of the effort to establish deterioration factors under this paragraph (b).

(6) You may to use other testing methods to determine deterioration factors, consistent with good engineering judgment.

(c) Include the following information in your application for certification:

(1) If you use test data from a different engine family, explain why this is appropriate and include all the emission measurements on which you base the deterioration factor.

(2) If you do testing to determine deterioration factors, describe the form and extent of service accumulation, including a rationale for selecting the service-accumulation period and the method you use to accumulate hours.

■ 294. Section 1051.245 is amended by revising paragraphs (a) introductory text, (b), (c), and (d) to read as follows:

§ 1051.245 How do I demonstrate that my engine family complies with evaporative emission standards?

(a) For purposes of certification, your engine family is considered in compliance with the evaporative emission standards in subpart B of this part if you do either of the following:

* * * * *

(b) Your engine family is deemed not to comply if any fuel tank or fuel line representingthat family has test results showing a deteriorated emission level above the standard.

(c) To compare emission levels with the emission standards, apply deterioration factorsto the measured emission levels. For permeation emissions, use the following proceduresto establish an additive deterioration factor, as described in § 1051.240(c)(2):

(1) Section 1051.515 specifies how to test your fuel tanks to develop deterioration factors. Small-volume manufacturers may use assigned deterioration factors that we establish. Apply the deterioration factors as follows:

(i) Calculate the deterioration factor from emission tests performed before and after the durability tests as described in § 1051.515(c) and (d), using good engineering judgment. The durability tests described in § 1051.515(d) representthe minimum requirements for determining a deterioration factor. You may not use a deterioration factor that is less than the difference between evaporative emissions before and after the durability tests as described in § 1051.515(c) and(d).

(ii) Do not apply the deterioration factor to test results for tanks that have already undergone these durability tests.

(2) Determine the deterioration factor for fuel lines using good engineering judgment.

(d) Collect emission data using measurements to one more decimal place than the applicable standard. Apply the deterioration factor to the official emission result, as described in paragraph (c) of this section, then round the adjusted figure to the same number of decimal places as the emission standard. Compare the rounded emission levels to the emission standard for each emission-data vehicle.

* * * * *

■ 295. Section 1051.250 is revised to read as follows:

§ 1051.250 What records must I keep and make available to EPA?

(a) Organize and maintain the following records:

(1) A copy of all applications and any summary information you send us.

(2) Any of the information we specify in § 1051.205 that you were not required to include in your application.

(3) A detailed history of each emission-data vehicle. For each vehicle, describe all of the following:

(i) The emission-data vehicle's construction, including its origin and buildup, steps you took to ensure that it represents production vehicles, any components you built specially for it, and all the components you include in your application for certification.

(ii) How you accumulated vehicle or engine operating hours, including the dates and the number of hours accumulated.

(iii) All maintenance, including modifications, parts changes, and other service, and the dates and reasons for the maintenance.

(iv) All your emission tests, including documentation on routine and standardtests, as specified in 40 CFR part 1065, and the date and purpose of each test.

(v) All tests to diagnose engine or emission-control performance, giving the date and time of each and the reasons for the test.

(vi) Any other significant events.

(4) Production figures for each engine family divided by assembly plant.

(5) Keep a list of engine identification numbers for all the engines you produce under each certificate of conformity.

(b) Keep data from routine emission tests (such as test cell temperatures and relative humidity readings) for one year after we issue the associated certificate of conformity.Keep all other information specified in paragraph (a) of this section for eight years after we issue your certificate.

(c) Store these records in any format and on any media, as long as you can promptly send us organized, written records in English if we ask for them. You must keep these records readily available. We may review them at any time.

(d) Send us copies of any maintenance instructions or explanations if we ask for them.

■ 296. Section 1051.255 is revised to read as follows:

§ 1051.255 What decisions may EPA make regarding my certificate of conformity?

(a) If we determine your application is complete and shows that the engine family meets all the requirements of this part and the Act, we will issue a certificate of conformity for your engine family for that model year. We may make the approval subject to additional conditions.

(b) We may deny your application for certification if we determine that your engine family fails to comply with emission standards or other requirements of this part or the Act. Our

decision may be based on a review of all information available to us. If we deny your application, we will explain why in writing.

(c) In addition, we may deny your application or suspend or revoke your certificate if you do any of the following:

(1) Refuse to comply with any testing or reporting requirements.

(2) Submit false or incomplete information (paragraph (e) of this section applies if this is fraudulent).

(3) Render inaccurate any test data.

(4) Deny us from completing authorized activities despite our presenting a warrant or court order (see 40 CFR 1068.20). This includes a failure to provide reasonable assistance.

(5) Produce engines for importation into the United States at a location where local law prohibits us from carrying out authorized activities.

(6) Fail to supply requested information or amend your application to include all engines being produced.

(7) Take any action that otherwise circumvents the intent of the Act or this part.

(d) We may void your certificate if you do not keep the records we require or do not give us information as required under this part or the Act.

(e) We may void your certificate if we find that you intentionally submitted false orincomplete information.

(f) If we deny your application or suspend, revoke, or void your certificate, you may ask for a hearing (see § 1051.820).

■ 297. The heading for subpart D is revised to read as follows:

Subpart D—Testing Production-Line Vehicles and Engines

■ 298. Section 1051.301 is amended by revising paragraph (a) and adding paragraph (h) to read as follows:

§ 1051.301 When must I test my production-line vehicles or engines

(a) If you produce vehicles that are subject to the requirements of this part, you must test them as described in this subpart. If your vehicle is certified to g/kW-hr standards, then test the engine; otherwise, test the vehicle. The provisions of this subpart do not apply to small-volume manufacturers.

* * * * *

(h) Vehicles certified to the following standards are exempt from the production-line testing requirements of this subpart if no engine families in the averaging set participate in the averaging, banking, and trading program described in subpart H of this part:

(1) Phase I or Phase 2 standards in § 1051.103

(2) Phase I standards in § 1051.105

(3) Phase I standards in § 1051.107.

(4) The standards in § 1051.615.

(5) The standards in § 1051.145.

■ 299. Section 1051.305 is amended by revising paragraphs (d)(1), (e), (f), and (g) to read as follows:

§ 1051.305 How must I prepare and test my production-line vehicles or engines

* * * * *

(d) * * *

(1) We may adjust or require you to adjust idle speed outside the physically adjustable range as needed only until the vehicle or engine has stabilized emission levels (see paragraph (e) of this section). We may ask you for information needed to establish an alternate minimum idle speed.

* * * * *

(e) *Stabilizing emission levels.* Before you test production-line vehicles or engines, you may operate the vehicle or engine to stabilize the emission levels. Using good engineering judgment, operate your vehicles or engines in a way that represents the way they will be used. You may operate each vehicle or engine for no more than the greater of two periods:

(1) 50 hours or 500 kilometers.

(2) The number of hours or kilometers you operated the emission-data vehicle used for certifying the engine family (see 40 CFR part 1065, subpart E, or the applicable regulations governing how you should prepare your test vehicle or engine).

(f) *Damage during shipment.* If shipping a vehicle or engine to a remote facility for production-line testing makes necessary an adjustment or repair, you must wait until after the initial emission test to do this work. We may waive this requirement if the test would be impossible or unsafe, or if it would permanently damage the vehicle or engine. Report to us, in your written report under § 1051.345, all adjustments or repairs you make on test vehicles or engines before each test.

(g) *Retesting after invalid tests.* You may retest a vehicle or engine if you determine an emission test is invalid under subpart F of this part. Explain in your written report reasons for invalidating any test and the emission results from all tests. If you retest a vehicle or engine, you may ask us within ten days of testing. We will generally answer within ten days after we receive your information.

■ 300. Section 1051.310 is amended by revising paragraphs (c) introductory test, (c)(2), (f), (g), and (i) to read as follows:

§ 1051.310 How must I select vehicles or engines for production-line testing

* * * * *

(c) Calculate the required sample size for each engine family. Separately calculate this figure for HC, NO_X (or $HC+NO_X$), and CO (and other regulated pollutants). The required sample size is the greater of these calculated values. Use the following equation:

$$N = \left[\frac{(t_{95} \times \sigma)}{(x - STD)}\right]^2 + 1$$

Where:

N = Required sample size for the model year.

t_{95} = 95% confidence coefficient, which depends on the number of tests completed, n, as specified in the table in paragraph (c)(1) of this section. It defines 95% confidence intervals for a one-tail distribution.

x = Mean of emission test results of the sample.

STD = Emission standard (or family emission limit, if applicable).

σ = Test sample standard deviation (see paragraph (c)(2) of this section).

n = The number of tests completed in an engine family.

* * * * *

(2) Calculate the standard deviation, σ, or the test sample using the following formula:

$$\sigma = \sqrt{\frac{\sum (X_i - x)^2}{n - 1}}$$

Where:

X_i = Emission test result for an individual vehicle or engine.

* * * * *

(f) Distribute the remaining vehicle or engine tests evenly throughout the rest of the year. You may need to adjust your schedule for selecting vehicles or engines if the required sample size changes. Continue to randomly select vehicles or engines from each engine family.

(g) Continue testing any engine family for which the sample mean, x, is greater than the emission standard. This applies if the sample mean for either HC, NO_X (or $HC+NO_X$) or CO (or other regulated pollutants) is greater than the emission standard. Continue testing until one of the following things happens:

(1) The number of tests completed in an engine family, n, is greater than the required sample size, N, and the sample mean, x, is less than or equal to the emission standard. For example, If N = 3.1 after the third test, the sample-size calculation does not allow you to stop testing.

(2) The engine family does not comply according to § 1051.315.

(3) You test 30 vehicles or engines from the engine family.

(4) You test one percent of your projected annual U.S.-directed production volume for the engine family, rounded to the nearest whole number.

(5) You choose to declare that the engine family fails the requirements of this subpart.

* * * * *

(i) You may elect to test more randomly chosen vehicles or engines than we require under this section. Include these vehicles or engines in the sample-size calculations.

■ 301. Section 1051.315 is amended by revising the introductory text to read as follows:

§ 1051.315 How do I know when my engine family fails the production-line testing requirements

This section describes the pass-fail criteria for the production-line testing requirements. We apply these criteria on an engine family basis. See§ 1051.320 for the requirements that apply to individual vehicles or engines that fail a production-line test.

* * * * *

■ 302. Section 1051.325 is amended by revising paragraph (d) to read as follows:

§ 1051.325 What happens if an engine family fails the production-line requirements?

* * * * *

(d) Section 1051.335 specifies steps you must take to remedy the cause of the engine family's production-line failure. All the vehicles you have produced since the end of the last test period are presumed noncompliant and should be addressed in your proposed remedy. We may require you to apply the remedy to engines produced earlier if we determine that the cause of the failure is likely to have affected the earlier engines.

* * * * *

■ 303. Section 1051.345 is amended by revising paragraphs (a) introductory text, (a)(5),(a)(10), and (d) to read as follows:

§ 1051.345 What production-line testing records must I send to EPA?

* * * * *

(a) Within 30 calendar days of the end of each test period, send us a report with the following information:

* * * * *

(5) Identify how you accumulated hours of operation on the vehicles or engines and describe the procedure and schedule you used.

* * * * *

(10) State the date the test period ended for each engine family.

* * * * *

(d) Send electronic reports of production-line testing to the Designated ComplianceOfficer using an approved information format. If you want to use a different format, send us a written request with justification for a waiver.

* * * * *

■ 304. Section 1051.350 is amended by revising paragraph (a) to read as follows:

§ 1051.350 What records must I keep?

(a) Organize and maintain your records as described in this section. We may review your records at any time.

* * * * *

■ 305. Section 1051.501 is amended by revising the introductory text and paragraphs (a), (b), (c)(2), and (d) and adding paragraph (e)(3) to read as follows:

§ 1051.501 What procedures must I use to test my vehicles or engines?

This section describes test procedures that you use to determine whether vehicles meet the emission standards of this part. See § 1051.235 to determine when testing is required for certification. See subpart D of this part for the production-line testing requirements.

(a) *Snowmobiles.* For snowmobiles, use the equipment and procedures for spark-ignition engines in 40 CFR part 1065 to determine whether your snowmobiles meet the duty-cycle emission standards in § 1051.103. Measure the emissions of all the pollutants we regulate in § 1051.103. Use the duty cycle specified in § 1051.505.

(b) *Motorcycles and ATVs.* For motorcycles and ATVs, use the equipment, procedures, and duty cycle in 40 CFR part 86, subpart F, to determine whether your vehicles meet the exhaust emission standards in § 1051.105 or § 1051.107. Measure the emissions of all the pollutants we regulate in § 1051.105 or § 1051.107. If we allow you to certify ATVs based on engine testing, use the equipment, procedures, and duty cycle described or referencedin the section that allows engine testing. For motorcycles with engine displacement at or below 169 cc and all ATVs, use the driving schedule in paragraph (c) of Appendix I to 40CFR part 86. For all other motorcycles, use the driving schedule in paragraph (b) of Appendix I to part 86. With respect to vehicle-speed governors, test motorcycles andATVs in their ungoverned configuration, unless we approve in advance testing in a governed configuration. We will only approve testing in a governed configuration if you can show that the governor is permanently installed on all production vehicles and is unlikely to be removed in use. With respect to engine-speed governors, test motorcycles and ATVs in their governed configuration. Run the test engine, with all emission-control systems operating, long enough to stabilize emission levels; you may consider emission levels stable without measurement if you accumulate 12 hours of operation.

(c) * * *

(2) Prior to permeation testing of fuel hose, the hose must be preconditioned by filling the hose with the fuel specified in paragraph (d)(3) of this section, sealing the openings, and soaking the hose for 4 weeks at 23±5 °C. To measure fuel-line permeation emissions, use the equipment and procedures specified in SAE J30 (incorporated by reference in § 1051.810). The measurements must be performed at 23±2 °C using the fuel specified in paragraph (d)(3) of this section.

(d) *Fuels.* Use the fuels meeting the following specifications:

(1) *Exhaust.* Use the fuels and lubricants specified in 40 CFR part 1065, subpart H, for all the exhaust testing we require in this part. For service accumulation, use the test fuel or any commercially available fuel that is representative of the fuel that in-use engines will use.

(2) *Fuel Tank Permeation.* (i) For the preconditioning soak described in § 1051.515(a)(1) and fuel slosh durability test described in § 1051.515(d)(3), usethe fuel specified in Table 1 of 40 CFR 1065.710 blended with 10 percent ethanol by volume. As an alternative, you may use Fuel CE10, which is Fuel C as specified in ASTM D 471–98 (incorporated by reference in § 1051.810) blended with 10 percent ethanol by volume.

(ii) For the permeation measurement test in § 1051.515(b), use the fuel specified in Table 1 of 40 CFR 1065.710. As an alternative, you may use the fuel specified in paragraph (d)(2)(i) of this section.

(3) *Fuel Hose Permeation.* Use the fuel specified in Table 1 of 40 CFR 1065.710 blended with 10 percent ethanol by volume for permeation testing of fuel lines. As an alternative, you may use Fuel CE10, which is Fuel C as specified in ASTM D 471–98(incorporated by reference in § 1051.810) blended with 10 percent ethanol by volume.

(e) * * *

(3) You may test engines using a test speed based on the point of maximum power if that represents in-use operation

better than testing based on maximum test speed.

* * * * *

■ 306. Section 1051.505 is amended by revising paragraphs (a), (b)(3), (d), (e), (f)introductory text, (f)(5), and (f)(6) to read as follows:

§ 1051.505 What special provisions apply for testing snowmobiles?

Use the following special provisions for testing snowmobiles:

(a) You may perform steady-state testing with either discrete-mode or ramped-modal cycles. You must use the type of testing you select in your application for certification for all testing you perform for that engine family. If we test your engines to confirm thatthey meet emission standards, we will do testing the same way. We may also perform other testing as allowed by the Clean Air Act. Measure steady-state emissions as follows:

(1) For discrete-mode testing, sample emissions separately for each mode, then calculate an average emission level for the whole cycle using the weighting factors specified for each mode. In each mode, operate the engine for at least 5 minutes, then sample emissions for at least 1 minute. Calculate cycle statistics for the sequence of modes and compare with the specified values in 40 CFR 1065.514 to confirm that the test is valid.

(2) For ramped-modal testing, start sampling at the beginning of the first mode and continue sampling until the end of the last mode. Calculate emissions and cycle statistics the same as for transient testing.

(3) Measure emissions by testing the engine on a dynamometer with one or more of the following sets of duty cycles to determine whether it meets the steady-state emission standards in § 1051.103:

(i) The following duty cycle applies for discrete-mode testing:

TABLE 1 OF § 1051.505.—5-MODE DUTY CYCLE FOR SNOWMOBILES

Mode No.	Speed (percent) [1]	Torque (percent) [2]	Minimum time in mode (minutes)	Weighting factors
1	100	100	3.0	0.12
2	85	51	3.0	0.27
3	75	33	3.0	0.25
4	65	19	3.0	0.31
5	([3])	0	3.0	0.05

[1] Percent speed is percent of maximum test speed.
[2] Percent torque is percent of maximum test torque at maximum test speed.
[3] Idle.

(ii) The following duty cycle applies for ramped-modal testing:

TABLE 2 OF § 1051.505.—RAMPED-MODAL CYCLE FOR TESTING SNOWMOBILES

RMC mode	Time in mode	Speed (percent) [1]	Torque (percent) [2,3]
1a Steady-state	27	Warm Idle	0
1b Transition	20	Linear Transition	Linear Transition.
2a Steady-state	121	100	100
2b Transition	20	Linear Transition	Linear Transition.
3a Steady-state	347	65	19
3b Transition	20	Linear Transition	Linear Transition.
4a Steady-state	305	85	51
4b Transition	20	Linear Transition	Linear Transition.
5a Steady-state	272	5	33
5b Transition	20	Linear Transition	Linear Transition.
6 Steady-state	28	Warm Idle	0

[1] Percent speed is percent of maximum test speed.
[2] Advance from one mode to the next within a 20-second transition phase. During the transition phase, command a linear progression from the torque setting of the current mode to the torque setting of the next mode.
[3] Percent torque is percent of maximum test torque at maximum test speed.

(b) * * *

(3) Keep engine torque under 5 percent of maximum test torque.

* * * * *

(d) Ambient temperatures during testing must be between 20 °C and 30 °C (68 °F and 86 °F), or other representative test temperatures, as specified in paragraph (f) of this section.

(e) See 40 CFR part 1065 for detailed specifications of tolerances and calculations.

(f) You may test snowmobiles at ambient temperatures below 20 °C or using intake air temperatures below 20 °C if you show that such testing complies with 40 CFR 1065.10(c)(1). You must get our approval before you begin the emission testing. For example, the following approach would be appropriate to show that such testing complies with 40 CFR 1065.10(c)(1):

* * * * *

(5) Calculate the nominal intake air test temperature for each test mode as −10° C (14 °F) plus the temperature difference for the corresponding mode determined in paragraph (f)(4) of this section.

(6) Before the emissions test, select the appropriate carburetor jetting for −10° C (14 °F) conditions according to the jet chart. For each mode, maintain the inlet air temperature within 5° C (9° F) of the corresponding modal

temperature calculated in paragraph (f)(5) of this section.

* * * * *

■ 307. Section 1051.515 is amended by revising paragraphs (a)(5), (b), and (d)(2) to read as follows:

§ 1051.515 How do I test my fuel tank for permeation emissions?

* * * * *

(a) * * *

(5) Seal the fuel tank using fuel caps and other fittings (excluding petcocks) that can be used to seal openings in a production fuel tank. In cases where openings are not normally sealed on the fuel tank (such as hose-connection fittings and vents in fuel caps), these openings may be sealed using nonpermeable fittings such as metal or fluoropolymer plugs.

(b) *Permeation test run.* To run the test, take the following steps for a tank that was preconditioned as specified in paragraph (a) of this section:

(1) Weigh the sealed fuel tank and record the weight to the nearest 0.1 grams. You may use less precise weights as long as the difference in mass from the start of the testto the end of the test has at least three significant figures. Take this measurement within 8 hours of filling the tank with test fuel as specified in paragraph (a)(3) of this section.

(2) Carefully place the tank within a ventilated, temperature-controlled room or enclosure. Do not spill or add any fuel.

(3) Close the room or enclosure and record the time.

(4) Ensure that the measured temperature in the room or enclosure is 28±2 °C.

(5) Leave the tank in the room or enclosure for 14 days.

(6) Hold the temperature of the room or enclosure to 28±2 °C; measure and record the temperature at least daily.

(7) At the end of the soak period, weigh the sealed fuel tank and record the weight to the nearest 0.1 grams. You may use less precise weights as long as the difference in mass from the start of the test to the end of the test has at least three significant figures. Unless the same fuel is used in the preconditioning fuel soak and the permeation test run, record weight measurements on five separate days per week of testing. The test is void if a linear plot of tank weight vs. test days for the full soak period for permeation testing specified in paragraph (b)(5) of this section yields r^2 below 0.8. See 40 CFR 1065.602 for the equation to calculate r^2.

(8) Subtract the weight of the tank at the end of the test from the weight of the tank at the beginning of the test; divide the difference by the internal surface area of the fuel tank. Divide this g/m² value by the number of test days (using at least three significant figures) to calculate the g/m²/day emission rate. Example: If a tank with an internal surface area of 0.72 m² weighed 31882.3 grams at the beginning of the test and weighed 31813.8 grams after soaking for 14.03 days, then the g/m²/day emission rate would be—

$$(31882.3\ g - 31813.8\ g)/0.72\ m^2/14.03\ days = 6.78\ g/m^2/day.$$

(9) Round your result to the same number of decimal places as the emission standard.

(10) In cases where consideration of permeation rates, using good engineering judgment, leads you to conclude that soaking for 14 days is not long enough to measure weight change to at least three significant figures, you may soak for 14 days longer. In this case, repeat the steps in paragraphs (b)(8) and (9) of this section to determine the weight change for the full 28 days.

* * * * *

(d) * * *

(2) *UV exposure.* Perform a sunlight-exposure test by exposing the tank to an ultraviolet light of at least 24 W/m² (0.40 W-hr/m²/min) on the tank surface for at least 450 hours. Alternatively, the fuel tank may be exposed to direct natural sunlight for an equivalent period of time, as long as you ensure that the tank is exposed to at least 450 daylight hours.

* * * * *

■ 308. Section 1051.520 is revised to read as follows:

§ 1051.520 How do I perform exhaust durability testing?

Sections 1051.240 and 1051.243 describe the method for testing that must be performedto establish deterioration factors for an engine family.

■ 309. Section 1051.605 is revised to read as follows:

§ 1051.605 What provisions apply to engines already certified under the motor-vehicle program or the Large Spark-ignition program?

(a) *General provisions.* If you are an engine manufacturer, this section allows you to introduce into commerce new recreational vehicles, and engines for recreational vehicles,if the engines are already certified to the requirements that apply to spark-ignition engines under 40 CFR parts 85 and 86 or 40 CFR part 1048 for the appropriate model year. If you comply with all the provisions of this section, we consider the certificate issued under 40 CFR part 86 or 1048 for each engine to also be a valid certificate of conformity underthis part 1051 for its model year, without a separate application for certification under the requirements of this part 1051. See § 1051.610 for similar provisions that apply to vehicles that are already certified to the vehicle-based standards for motor vehicles.

(b) *Vehicle-manufacturer provisions.* If you are not an engine manufacturer, you mayinstall an engine certified for the appropriate model year under 40 CFR part 86 or 1048 in a recreational vehicle as long as you meet all the requirements and conditions specified in paragraph (d) of this section. If you modify the non-recreational engine in any of the ways described in paragraph (d)(2) of this section for installation in a recreational vehicle, we will consider you a manufacturer of recreational vehicles. Such engine modifications prevent you from using the provisions of this section.

(c) *Liability.* Engines for which you meet the requirements of this section are exempt from all the requirements and prohibitions of this part, except for those specified in this section. Engines exempted under this section must meet all the applicable requirements from 40 CFR parts 85 and 86 or 40 CFR part 1048. This paragraph (c) applies to engine manufacturers, vehicle manufacturers who use such an engine, and all other persons as if the engine were used in its originally intended application. The prohibited acts of 40CFR 1068.101(a)(1) apply to these new engines and vehicles; however, we consider the certificate issued under 40 CFR part 86 or 1048 for each engine to also be a valid certificate of conformity under this part 1051 for its model year. If we make a determination that these engines do not conform to the regulations during their useful life, we may require you to recall them under this part 1051 or under 40 CFR part 85 or 1068.505.

(d) *Specific requirements.* If you are an engine or vehicle manufacturer and meet all the following criteria and requirements regarding your new engine or vehicle, the vehicle using the engine is eligible for an exemption under this section:

(1) Your engine must be covered by a valid certificate of conformity issued under 40 CFR part 86 or 1048.

(2) You must not make any changes to the certified engine that could reasonably be expected to increase its exhaust emissions for any pollutant, or its evaporative emissions. For example, if you make any of the following changes to one of these engines, you do not qualify for this exemption:

(i) Change any fuel system or evaporative system parameters from the certified configuration (this does not apply to refueling controls).

(ii) Change, remove, or fail to properly install any other component, element of design, or calibration specified in the engine manufacturer's application for certification. This includes aftertreatment devices and all related components.

(iii) Modify or design the engine cooling system so that temperatures or heat rejection rates are outside the original engine manufacturer's specified ranges.

(3) You must show that fewer than 50 percent of the engine family's total sales in the United States are used in recreational vehicles. This includes engines used in any application, without regard to which company manufactures the vehicle or equipment.Show this as follows:

(i) If you are the original manufacturer of the engine, base this showing on your sales information.

(ii) In all other cases, you must get the original manufacturer of the engine to confirm this based on its sales information.

(4) You must ensure that the engine has the emission control information label we require under 40 CFR part 86 or 1048.

(5) You must add a permanent supplemental label to the engine in a position where it will remain clearly visible after installation in the vehicle. In the supplemental label, do the following:

(i) Include the heading: ''RECREATIONAL VEHICLE EMISSION CONTROLINFORMATION''.

(ii) Include your full corporate name and trademark. You may instead include the full corporate name and trademark of another company you choose to designate.

(iii) State: ''THIS ENGINE WAS ADAPTED FOR A RECREATIONAL USEWITHOUT AFFECTING ITS EMISSION CONTROLS.''.

(iv) State the date you finished installation (month and year), if applicable.

(6) The original and supplemental labels must be readily visible after the engine isinstalled in the vehicle or, if the vehicle obscures the engine's emission controlinformation label, the make sure the vehicle manufacturer attaches duplicate labels, as described in 40 CFR 1068.105.

(7) Send the Designated Compliance Officer a signed letter by the end of each calendar year (or less often if we tell you) with all the following information:

(i) Identify your full corporate name, address, and telephone number.

(ii) List the engine or vehicle models you expect to produce under this exemptionin the coming year.

(iii) State: ''We produce each listed [engine or vehicle] model for recreational application without making any changes that could increase its certified emission levels, as described in 40 CFR 1051.605.''.

(e) *Failure to comply.* If your engines do not meet the criteria listed in paragraph (d) of this section, they will be subject to the standards, requirements, and prohibitions of this part 1051 and the certificate issued under 40 CFR part 86 or 1048 will not be deemed to also be a certificate issued under this part 1051. Introducing these engines into commerce without a valid exemption or certificate of conformity under this part violates the prohibitions in 40 CFR 1068.101(a)(1).

(f) *Data submission.* We may require you to send us emission test data on any applicable nonroad duty cycles.

(g) *Participation in averaging, banking and trading.* Engines or vehicles adapted for recreational use under this section may not generate or use emission credits under this part 1051. These engines or vehicles may generate credits under the ABT provisions in 40 CFR part 86. These engines or vehicles must use emission credits under 40 CFR part 86 if they are certified to an FEL that exceeds an applicable standard.

■ 310. Section 1051.610 is revised to read as follows:

§ 1051.610 What provisions apply to vehicles already certified under the motor-vehicle program?

(a) *General provisions.* If you are a motor-vehicle manufacturer, this section allows you to introduce new recreational vehicles into commerce if the vehicle is already certified to the requirements that apply under 40 CFR parts 85 and 86. If you comply with all of the provisions of this section, we consider the certificate issued under 40 CFR part 86 for each motor vehicle to also be a valid certificate of conformity for the engine under this part 1051 for its model year, without a separate application for certification under the requirements of this part 1051. This section applies especially for highway motorcyclesthat are modified for recreational nonroad use. See § 1051.605 for similar provisions that apply to motor-vehicle engines or Large SI engines produced for recreational vehicles.

(b) *Nonroad vehicle-manufacturer provisions.* If you are not a motor-vehicle manufacturer, you may produce recreational vehicles from motor vehicles under this section as long as you meet all the requirements and conditions specified in paragraph (d) of this section. If you modify the motor vehicle or its engine in any of the ways describedin paragraph (d)(2) of this section, we will consider you a manufacturer of a new recreational vehicle. Such modifications prevent you from using the provisions of this section.

(c) *Liability.* Engines and vehicles for which you meet the requirements of this section are exempt from all the requirements and prohibitions of this part, except for those specifiedin this section. Engines exempted under this section must meet all the applicable requirements from 40 CFR parts 85 and 86. This applies to engine manufacturers, vehicle manufacturers, and all other persons as if the recreational vehicles were motor vehicles. The prohibited acts of 40 CFR 1068.101(a)(1) apply to these new recreational vehicles; however, we consider the certificate issued under 40 CFR part 86 for each motor vehicle to also be a valid certificate of conformity for the recreational vehicle underthis part 1051 for its model year. If we make a determination that these engines or vehicles do not conform to the regulations during their useful life, we may require you to recall them under 40 CFR part 86 or 40 CFR 1068.505.

(d) *Specific requirements.* If you are a motor-vehicle manufacturer and meet all the following criteria and requirements regarding your new recreational vehicle and its engine, the vehicle is eligible for an exemption under this section:

(1) Your vehicle must be covered by a valid certificate of conformity as a motor vehicle issued under 40 CFR part 86.

(2) You must not make any changes to the certified vehicle that we could reasonably expect to increase its exhaust emissions for any pollutant, or its evaporative emissionsif it is subject to evaporative-emission standards. For example, if you make any of the following changes, you do not qualify for this exemption:

(i) Change any fuel system parameters from the certified configuration.

(ii) Change, remove, or fail to properly install any other component, element of design, or calibration specified in the vehicle manufacturer's application for certification. This includes aftertreatment devices and all related components.

(iii) Modify or design the engine cooling system so that temperatures or heat rejection rates are outside the

original vehicle manufacturer's specified ranges.

(iv) Add more than 500 pounds to the curb weight of the originally certified motor vehicle.

(3) You must show that fewer than 50 percent of the engine family's total sales in the United States are used in recreational vehicles. This includes any type of vehicle, without regard to which company completes the manufacturing of the recreational vehicle. Show this as follows:

(i) If you are the original manufacturer of the vehicle, base this showing on your sales information.

(ii) In all other cases, you must get the original manufacturer of the vehicle to confirm this based on their sales information.

(4) The vehicle must have the vehicle emission control information we require under 40 CFR part 86.

(5) You must add a permanent supplemental label to the vehicle in a position where it will remain clearly visible. In the supplemental label, do the following:

(i) Include the heading: ''RECREATIONAL VEHICLE ENGINE EMISSIONCONTROL INFORMATION''.

(ii) Include your full corporate name and trademark. You may instead include the full corporate name and trademark of another company you choose to designate.

(iii) State: ''THIS VEHICLE WAS ADAPTED FOR RECREATIONAL USEWITHOUT AFFECTING ITS EMISSION CONTROLS.''.

(iv) State the date you finished modifying the vehicle (month and year), if applicable.

(6) The original and supplemental labels must be readily visible in the fully assembled vehicle.

(7) Send the Designated Compliance Officer a signed letter by the end of each calendar year (or less often if we tell you) with all the following information:

(i) Identify your full corporate name, address, and telephone number.

(ii) List the vehicle models you expect to produce under this exemption in the coming year.

(iii) State: ''We produced each listed engine or vehicle model for recreational application without making any changes that could increase its certified emission levels, as described in 40 CFR 1051.610.''.

(e) *Failure to comply.* If your engines or vehicles do not meet the criteria listed in paragraph (d) of this section, the engines will be subject to the standards, requirements, and prohibitions of this part 1051, and the certificate issued under 40 CFR part 86 will not be deemed to also be a certificate issued under this part 1051. Introducing these engines into commerce without a valid exemption or certificate of conformity under this part violates the prohibitions in 40 CFR 1068.101(a)(1).

(f) *Data submission.* We may require you to send us emission test data on any applicable nonroad duty cycles.

(g) *Participation in averaging, banking and trading.* Vehicles adapted for recreational use under this section may not generate or use emission credits under this part 1051. These engines may generate credits under the ABT provisions in 40 CFR part 86. These engines must use emission credits under 40 CFR part 86 if they are certified to an FEL that exceeds an applicable standard.

■ 311. Section 1051.615 is amended by revising paragraphs (a) introductory text, (b)introductory text, and (d) to read as follows:

§ 1051.615 What are the special provisions for certifying small recreational engines?

(a) You may certify ATVs with engines that have total displacement of less than 100 ccto the following exhaust emission standards instead of certifying them to the exhaust emission standards of subpart B of this part:

* * * * *

(b) You may certify off-highway motorcycles with engines that have total displacement of 70 cc or less to the following exhaust emission standards instead of certifying them to the exhaust emission standards of subpart B of this part:

* * * * *

(d) Measure steady-state emissions by testing the engine on an engine dynamometer using the equipment and procedures of 40 CFR part 1065 with either discrete-mode or ramped-modal cycles. You must use the type of testing you select in your application for certification for all testing you perform for that engine family. If we test your engines to confirm that they meet emission standards, we will do testing the same way. We may also perform other testing as allowed by the Clean Air Act. Measure steady-state emissions as follows:

(1) For discrete-mode testing, sample emissions separately for each mode, then calculate an average emission level for the whole cycle using the weighting factors specified for each mode. In each mode, operate the engine for at least 5 minutes, then sample emissions for at least 1 minute. Calculate cycle statistics for the sequence of modes and compare with the specified values in 40 CFR 1065.514 to confirm that the test is valid.

(2) For ramped-modal testing, start sampling at the beginning of the first mode and continue sampling until the end of the last mode. Calculate emissions and cycle statistics the same as for transient testing.

(3) Measure emissions by testing the engine on a dynamometer with one or more of the following sets of duty cycles to determine whether it meets applicable emission standards:

(i) The following duty cycle applies for discrete-mode testing:

TABLE 1 OF § 1051.615.—6-MODE DUTY CYCLE FOR RECREATIONAL ENGINES

Mode No.	Engine speed (percent) [1]	Torque (percent) [2]	Minimum time in mode (minutes)	Weighting factors
1	85	100	5.0	0.09
2	85	75	5.0	0.20
3	85	50	5.0	0.29
4	85	25	5.0	0.30
5	85	10	5.0	0.07
6	([3])	0	5.0	0.05

[1] Percent speed is percent of maximum test speed.
[2] Percent torque is percent of maximum test torque at maximum test speed.
[3] Idle.

(ii) The following duty cycle applies for ramped-modal testing:

TABLE 2 OF § 1051.615.—RAMPED-MODAL CYCLE FOR TESTING RECREATIONAL ENGINES

RMC mode	Time	Speed (percent) [1 2]	Torque (percent) [2 3]
1a Steady-state	41	Warm Idle	0
1b Transition	20	Linear Transition	Linear Transition.
2a Steady-state	135	85	100
2b Transition	20	85	Linear Transition.
3a Steady-state	112	85	10
3b Transition	20	85	Linear Transition.
4a Steady-state	337	85	75
4b Transition	20	85	Linear Transition.
5a Steady-state	518	85	25
5b Transition	20	85	Linear Transition.
6a Steady-state	494	85	50
6b Transition	20	Linear Transition	Linear Transition.
7 Steady-state	43	Warm Idle	0

[1] Percent speed is percent of maximum test speed.
[2] Advance from one mode to the next within a 20-second transition phase. During the transition phase, command a linear progression from the torque setting of the current mode to the torque setting of the next mode.
[3] Percent torque is percent of maximum test torque at the commanded test speed.

(4) During idle mode, hold the speed within your specifications, keep the throttle fully closed, and keep engine torque under 5 percent of the peak torque value at maximum test speed.

(5) For the full-load operating mode, operate the engine at wide-open throttle.

(6) See 40 CFR part 1065 for detailed specifications of tolerances and calculations.

* * * * *

■ 312. Section 1051.620 is amended by revising paragraph (b)(1)(vi) to read as follows:

§ 1051.620 When may a manufacturer obtain an exemption for competition recreational vehicles?

* * * * *

(b) * * *

(1) * * *

(vi) The absence of a functional seat. (For example, a seat with less than 30 square inches of seating surface would generally not be considered a functional seat).

* * * * *

■ 313. A new § 1051.645 is added to subpart G to read as follows:

§ 1051.645 What special provisions apply to branded engines?

The following provisions apply if you identify the name and trademark of another company instead of your own on your emission control information label, as provided by § 1051.135(c)(2):

(a) You must have a contractual agreement with the other company that obligates that company to take the following steps:

(1) Meet the emission warranty requirements that apply under § 1051.120. This may involve a separate agreement involving reimbursement of warranty-related expenses.

(2) Report all warranty-related information to the certificate holder.

(b) In your application for certification, identify the company whose trademark you will use and describe the arrangements you have made to meet your requirements under this section.

(c) You remain responsible for meeting all the requirements of this chapter, including warranty and defect-reporting provisions.

■ 314. Section 1051.701 is amended by revising paragraphs (a), (c), and (d) and adding paragraphs (e), (f), and (g) to read as follows:

§ 1051.701 General provisions.

(a) You may average, bank, and trade emission credits for purposes of certification as described in this subpart to show compliance with the standards of this part. To do this you must certify your engines to Family Emission Limits (FELs) and show that your average emission levels are below the applicable standards in subpart B of this part, or that you have sufficient credits to offset a credit deficit for the model year (as calculated in § 1051.720).

* * * * *

(c) The definitions of Subpart I of this part apply to this subpart. The following definitions also apply:

(1) *Actual emission credits* means emission credits you have generated that we have verified by reviewing your final report.

(2) *Average standard* means a standard that allows you comply by averaging all your vehicles under this part. See subpart B of this part to determine which standards are average standards.

(3) *Averaging set* means a set of engines in which emission credits may be exchanged only with other engines in the same averaging set.

(4) *Broker* means any entity that facilitates a trade of emission credits between a buyer and seller.

(5) *Buyer* means the entity that receives emission credits as a result of a trade.

(6) *Reserved emission credits* means emission credits you have generated that we have not yet verified by reviewing your final report.

(7) *Seller* means the entity that provides emission credits during a trade.

(8) *Trade* means to exchange emission credits, either as a buyer or seller.

(d) In your application for certification, base your showing of compliance on projected production volumes for vehicles whose point of first retail sale is in the United States. As described in § 1051.730, compliance with the requirements of this subpart is determined at the end of the model year based on actual production volumes for vehicles whose point of first retail sale is in the United States. Do not include any of the following vehicles to calculate emission credits:

(1) Vehicles exempted under subpart G of this part or under 40 CFR part 1068.

(2) Exported vehicles.

(3) Vehicles not subject to the requirements of this part, such as those excluded under § 1051.5.

(4) Vehicles for which the location of first retail sale is in a state that has applicable state emission regulations for

that model year. However, this restriction does not apply if we determine that the state standards and requirements are equivalent to those of this part and that these vehicles sold in such a state will not generate credits under the state program. For example, you may not include vehicles certified for California if it has more stringent emission standards for these vehicles or those vehicles generate or use emission credits under the California program.

(5) Any other vehicles, where we indicate elsewhere in this part 1051 that they are not to be included in the calculations of this subpart.

(e) You may not use emission credits generated under this subpart to offset any emissions that exceed an FEL or standard, except as specified in § 1051.225(f)(1). This applies for all testing, including certification testing, in-use testing, selective enforcement audits, and other production-line testing.

(f) Emission credits may be used in the model year they are generated or in future model years. Emission credits may not be used for past model years.

(g) You may increase or decrease an FEL during the model year by amending your application for certification under § 1051.225.

■ 315. Section 1051.705 is amended by revising paragraphs (a), (b), and (c) and adding paragraph (e) to read as follows:

§ 1051.705 How do I average emission levels?

(a) As specified in subpart B of this part, certify each vehicle to an FEL, subject to the FEL caps in subpart B of this part.

(b) Calculate a preliminary average emission level according to § 1051.720 for each averaging set using projected U.S.-directed production volumes from your application for certification, excluding vehicles described in § 1051.701(d)(4).

(c) After the end of your model year, calculate a final average emission level according to § 1051.720 for each type of recreational vehicle or engine you manufacture or import. Use actual U.S.-directed production volumes, excluding vehicles described in § 1051.701(d)(4).

* * * * *

(e) If your average emission level is above the allowable average standard, you must obtain enough emission credits to offset the deficit by the due date for the final report required in § 1051.730. The emission credits used to address the deficit may come from emission credits you have banked or from emission credits you obtain through trading.

■ 316. Section 1051.710 is revised to read as follows:

§ 1051.710 How do I generate and bank emission credits?

(a) Banking is the retention of emission credits by the manufacturer generating the emission credits for use in averaging or trading in future model years. You may use banked emission credits only within the averaging set in which they were generated.

(b) If your average emission level is below the average standard, you may calculate credits according to § 1051.720. Credits you generate do not expire.

(c) You may generate credits if you are a certifying manufacturer.

(d) In your application for certification, designate any emission credits you intend to bank. These emission credits will be considered reserved credits. During the model year and before the due date for the final report, you may redesignate these emission credits for averaging or trading.

(e) You may use banked emission credits from the previous model year for averaging or trading before we verify them, but we may revoke these emission credits if we are unable to verify them after reviewing your reports or auditing your records.

(f) Reserved credits become actual emission credits only when we verify them in reviewing your final report.

■ 317. Section 1051.715 is revised to read as follows:

§ 1051.715 How do I trade emission credits?

(a) Trading is the exchange of emission credits between manufacturers. You may use traded emission credits for averaging, banking, or further trading transactions. Traded emission credits may be used only within the averaging set in which they were generated.

(b) You may trade banked credits to any certifying manufacturer.

(c) You may trade actual emission credits as described in this subpart. You may also trade reserved emission credits, but we may revoke these emission credits based on our review of your records or reports or those of the company with which you traded emission credits.

(d) If a negative emission credit balance results from a transaction, both the buyer and seller are liable, except in cases we deem to involve fraud. See § 1051.255(e) for cases involving fraud. We may void the certificates of all engine families participating in a trade that results in a manufacturer having a negative balance of emission credits. See § 1051.745.

■ 318. Section 1051.720 is amended by revising paragraphs (a)(2) and (a)(3) and adding paragraph (a)(4) to read as follows:

§ 1051.720 How do I calculate my average emission level or emission credits?

(a) * * *

(2) For vehicles that have standards expressed as g/kW-hr and a useful life in kilometers, convert the useful life to kW-hr based on the maximum power output observed over the emission test and an assumed vehicle speed of 30 km/hr as follows: UL (kW-hr) = UL (km) × Maximum Test Power (kW) 30 ÷ km/hr. (Note: It is not necessary to include a load factor, since credit exchange is not allowed between vehicles certified to g/kW-hr standards and vehicles certified to g/km standards.)

(3) For evaporative emission standards expressed as g/m²/day, use the useful life value in years multiplied by 365.24 and calculate the average emission level as:

$$\text{Emission level} = \left[\sum_i (\text{FEL})_i \times (\text{UL})_i \times (\text{Production})_i\right] \Big/ \left[\sum_i (\text{Production})_i \times (\text{UL})_i\right]$$

Where:

FEL_i = The FEL to which the engine family is certified, as described in paragraph (a)(4) of this section.

Production_i = The number of vehicles in the engine family times the average internal surface area of the vehicles' fuel tanks.

(4) Determine the FEL for calculating credits under paragraph (a)(3) of this section using any of the following values:

(i) The FEL to which the tank is certified, as long as the FEL is at or below 3.0 g/m²/day.

(ii) 10.4 g/m²/day. However, if you use this value to establish the FEL for any of your tanks, you must use this value to establish the FEL for every tank not covered by paragraph (a)(4)(i) of this section.

(iii) The measured permeation rate of the tank or the measured permeation rate of a thinner-walled tank of the same material. However, if you use this approach to establish the FEL for any of your tanks, you must establish an FEL based on emission measurements for every tank not covered by paragraph (a)(4)(i) of this section.

* * * * *

■ 319. Section 1051.725 is revised to read as follows:

§ 1051.725 What must I include in my applications for certification?

(a) You must declare in your applications for certification your intent to use the provisions of this subpart. You must also declare the FELs you select for each engine family. Your FELs must comply with the specifications of subpart B of this part, including the FEL caps. FELs must be expressed to the same number of decimal places as the applicable standards.

(b) Include the following in your application for certification:

(1) A statement that, to the best of your belief, you will not have a negative balance of emission credits for any averaging set when all emission credits are calculated at the end of the year. This means that if you believe that your average emission level will be above the standard (*i.e.,* that you will have a deficit for the model year), you must have banked credits (or project to have received traded credits) to offset the deficit.

(2) Detailed calculations of projected emission credits (positive or negative) based on projected production volumes. If you will generate positive emission credits, state specifically where the emission credits will be applied (for example, whether they will be traded or reserved for banking). If you have projected negative emission credits, state the source of positive emission credits to offset the negative emission credits. Describe whether the emission credits are actual or reserved and whether they will come from banking, trading, or a combination of these. If you intend to rely on trading, identify from which manufacturer the emission credits will come.

■ 320. Section 1051.730 is revised to read as follows:

§ 1051.730 What ABT reports must I send to EPA?

(a) If any of your engine families are certified using the ABT provisions of this subpart, you must send an end-of-year report within 90 days after the end of the model year and a final report within 270 days after the end of the model year. We may waive the requirement to send the end-of year report, as long as you send the final report on time.

(b) Your end-of-year and final reports must include the following information for each engine family:

(1) Engine-family designation.

(2) The emission standards that would otherwise apply to the engine family.

(3) The FEL for each pollutant. If you changed an FEL during the model year, identify each FEL you used and calculate the positive or negative emission credits under each FEL. Also, describe how the applicable FEL can be identified for each vehicle you produced. For example, you might keep a list of vehicle identification numbers that correspond with certain FEL values.

(4) The projected and actual production volumes for the model year with a point of retail sale in the United States. If you changed an FEL during the model year, identify the actual production volume associated with each FEL.

(5) For vehicles that have standards expressed as g/kW-hr, maximum engine power for each vehicle configuration, and the sales-weighted average engine power for the engine family.

(6) Useful life.

(7) Calculated positive or negative emission credits. Identify any emission credits that you traded, as described in paragraph (d)(1) of this section.

(c) Your end-of-year and final reports must include the following additional information:

(1) Show that your net balance of emission credits in each averaging set in the applicable model year is not negative.

(2) State whether you will reserve any emission credits for banking.

(3) State that the report's contents are accurate.

(d) If you trade emission credits, you must send us a report within 90 days after the transaction, as follows:

(1) As the seller, you must include the following information in your report:

(i) The corporate names of the buyer and any brokers.

(ii) A copy of any contracts related to the trade.

(iii) The engine families that generated emission credits for the trade, including the number of emission credits from each family.

(2) As the buyer, you must include the following information in your report:

(i) The corporate names of the seller and any brokers.

(ii) A copy of any contracts related to the trade.

(iii) How you intend to use the emission credits, including the number of emission credits you intend to apply to each engine family (if known).

(e) Send your reports electronically to the Designated Compliance Officer using an approved information format. If you want to use a different format, send us a written request with justification for a waiver.

(f) Correct errors in your end-of-year report or final report as follows:

(1) You may correct any errors in your end-of-year report when you prepare the final report, as long as you send us the final report by the time it is due.

(2) If you or we determine within 270 days after the end of the model year that errors mistakenly decrease your balance of emission credits, you may correct the errors and recalculate the balance of emission credits. You may not make these corrections for errors that are determined more than 270 days after the end of the model year. If you report a negative balance of emission credits, we may disallow corrections under this paragraph (f)(2).

(3) If you or we determine anytime that errors mistakenly increase your balance of emission credits, you must correct the errors and recalculate the balance of emission credits.

■ 321. Section 1051.735 is revised to read as follows:

§ 1051.735 What records must I keep?

(a) You must organize and maintain your records as described in this section. We may review your records at any time.

(b) Keep the records required by this section for eight years after the due date for the end-of-year report. You may use any appropriate storage formats or media, including paper, microfilm, or computer diskettes.

(c) Keep a copy of the reports we require in § 1051.725 and § 1051.730.

(d) Keep the following additional records for each engine you produce under the ABT program:

(1) Engine family designation.

(2) Engine identification number.

(3) FEL and useful life.

(4) For vehicles that have standards expressed as g/kW-hr, maximum engine power.

(5) Build date and assembly plant.

(6) Purchaser and destination.

(e) We may require you to keep additional records or to send us relevant information not required by this section.

■ 322. A new § 1051.740 is added to subpart H to read as follows:

§ 1051.740 Are there special averaging provisions for snowmobiles?

For snowmobiles, you may only use credits for the same phase or set of standards against which they were generated, except as allowed by this section.

(a) *Restrictions.* (1) You may not use any Phase 1 or Phase 2 credits for Phase 3 compliance.

(2) You may not use Phase 1 HC credits for Phase 2 HC compliance. However, because the Phase 1 and Phase 2 CO standards are the same, you may use Phase 1 CO credits for compliance with the Phase 2 CO standards.

(b) *Special credits for next phase of standards.* You may choose to generate credits early for banking for purposes of compliance with later phases of standards as follows:

(1) If your corporate average emission level at the end of the model year exceeds the applicable (current) phase of standards (without the use of traded or previously banked credits), you may choose to redesignate some of your snowmobile production to a calculation to generate credits for a future phase of standards. To generate credits the snowmobiles designated must have an FEL below the emission level of that set of standards. This can be done on a pollutant specific basis.

(2) Do not include the snowmobiles that you redesignate in the final compliance calculation of your average emission level for the otherwise applicable (current) phase of standards. Your average emission level for the remaining (non-redesignated) snowmobiles must comply with the otherwise applicable (current) phase of standards.

(3) Include the snowmobiles that you redesignate in a separate calculation of your average emission level for redesignated engines. Calculate credits using this average emission level relative to the specific pollutant in the future phase of standards. These credits may be used for compliance with the future standards.

(4) For generating early Phase 3 credits, you may generate credits for $HC+NO_X$ or CO separately as described:

(i) To determine if you qualify to generate credits in accordance with paragraphs (b)(1) through (3) of this section, you must meet the credit trigger level. For $HC+NO_X$ this value is 62 g/kW-hr (which would be the $HC+NO_X$ standard that would result from inputting the highest allowable CO standard (275 g/kW-hr) into the Phase 3 equation). For CO the value is 200 g/kW-hr (which would be the CO standard that would result from inputting the highest allowable $HC+NO_X$ standard (90 g/kW-hr) into the Phase 3 equation).

(ii) $HC+NO_X$ and CO credits for Phase 3 are calculated relative to the 62 g/kW-hr and 200 g/kW-hr values, respectively.

(5) Credits can also be calculated for Phase 3 using both sets of standards. Without regard to the trigger level values, if your net emission reduction for the redesignated averaging set exceeds the requirements of Phase 3 in § 1051.103 (using both $HC+NO_X$ and CO in the Phase 3 equation in § 1051.103), then your credits are the difference between the Phase 3 reduction requirement of that section and your calculated value.

■ 323. A new § 1051.745 is added to subpart H to read as follows:

§ 1051.745 What can happen if I do not comply with the provisions of this subpart?

(a) For each engine family participating in the ABT program, the certificate of conformity is conditional upon full compliance with the provisions of this subpart during and after the model year. You are responsible to establish to our satisfaction that you fully comply with applicable requirements. We may void the certificate of conformity for an engine family if you fail to comply with any provisions of this subpart.

(b) You may certify your engine family to an FEL above an applicable standard based on a projection that you will have enough emission credits to avoid a negative credit balance for each averaging set for the applicable model year. However, except as allowed in § 1051.145(h), we may void the certificate of conformity if you cannot show in your final report that you have enough actual emission credits to offset a deficit for any pollutant in an engine family.

(c) We may void the certificate of conformity for an engine family if you fail to keep records, send reports, or give us information we request.

(d) You may ask for a hearing if we void your certificate under this section (see § 1051.820).

■ 324. Section 1051.801 is revised to read as follows:

§ 1051.801 What definitions apply to this part?

The following definitions apply to this part. The definitions apply to all subparts unless we note otherwise. All undefined terms have the meaning the Act gives to them. The definitions follow:

Act means the Clean Air Act, as amended, 42 U.S.C. 7401–7671q.

Adjustable parameter means any device, system, or element of design that someone can adjust (including those which are difficult to access) and that, if adjusted, may affect emissions or engine performance during emission testing or normal in-use operation. This includes, but is not limited to, parameters related to injection timing and fueling rate. You may ask us to exclude a parameter that is difficult to access if it cannot be adjusted to affect emissions without significantly degrading engine performance, or if you otherwise show us that it will not be adjusted in a way that affects emissions during in-use operation.

Aftertreatment means relating to a catalytic converter, particulate filter, or any other system, component, or technology mounted downstream of the exhaust valve (or exhaust port) whose design function is to decrease emissions in the engine exhaust before it is exhausted to the environment. Exhaust-gas recirculation (EGR) and turbochargers are not aftertreatment.

All-terrain vehicle means a land-based or amphibious nonroad vehicle that meets the criteria listed in paragraph (1) of this definition; or, alternatively the criteria of paragraph (2) of this definition but not the criteria of paragraph (3) of this definition:

(1) Vehicles designed to travel on four low pressure tires, having a seat designed to be straddled by the operator and handlebars for steering controls, and intended for use by a single operator and no other passengers are all-terrain vehicles.

(2) Other all-terrain vehicles have three or more wheels and one or more seats, are designed for operation over rough terrain, are intended primarily for transportation, and have a maximum vehicle speed of 25 miles per hour or higher. Golf carts generally do not meet these criteria since they are generally not designed for operation over rough terrain.

(3) Vehicles that meet the definition of ''offroad utility vehicle'' in this section are not all-terrain vehicles. However, § 1051.1(a) specifies that some offroad utility vehicles are required to meet the same requirements as all-terrain vehicles.

Amphibious vehicle means a vehicle with wheels or tracks that is designed primarily for operation on land and secondarily for operation in water.

Auxiliary emission-control device means any element of design that senses temperature, motive speed, engine RPM, transmission gear, or any other parameter for the purpose of activating, modulating, delaying, or deactivating

the operation of any part of the emission-control system.

Brake power means the usable power output of the engine, not including power required to fuel, lubricate, or heat the engine, circulate coolant to the engine, or to operate aftertreatment devices.

Calibration means the set of specifications and tolerances specific to a particular design, version, or application of a component or assembly capable of functionally describing its operation over its working range.

Certification means relating to the process of obtaining a certificate of conformity for an engine family that complies with the emission standards and requirements in this part.

Certified emission level means the highest deteriorated emission level in an engine family for a given pollutant from either transient or steady-state testing.

Compression-ignition means relating to a type of reciprocating, internal-combustion engine that is not a spark-ignition engine.

Crankcase emissions means airborne substances emitted to the atmosphere from any part of the engine crankcase's ventilation or lubrication systems. The crankcase is the housing for the crankshaft and other related internal parts.

Critical emission-related component means any of the following components:

(1) Electronic control units, aftertreatment devices, fuel-metering components, EGR-system components, crankcase-ventilation valves, all components related to charge-air compression and cooling, and all sensors and actuators associated with any of these components.

(2) Any other component whose primary purpose is to reduce emissions.

Designated Compliance Officer means the Manager, Engine Programs Group (6405–J), U.S. Environmental Protection Agency, 1200 Pennsylvania Ave., NW., Washington, DC 20460.

Designated Enforcement Officer means the Director, Air Enforcement Division (2242A), U.S. Environmental Protection Agency, 1200 Pennsylvania Ave., NW.,Washington, DC 20460.

Deteriorated emission level means the emission level that results from applying the appropriate deterioration factor to the official emission result of the emission-data vehicle.

Deterioration factor means the relationship between emissions at the end of useful life and emissions at the low-hour test point, expressed in one of the following ways:

(1) For multiplicative deterioration factors, the ratio of emissions at the end of useful life to emissions at the low-hour test point.

(2) For additive deterioration factors, the difference between emissions at the end of useful life and emissions at the low-hour test point.

Emission-control system means any device, system, or element of design that controls or reduces the regulated emissions from an engine.

Emission-data vehicle means a vehicle or engine that is tested for certification. This includes vehicles or engines tested to establish deterioration factors.

Emission-related maintenance means maintenance that substantially affects emissions or is likely to substantially affect emission deterioration.

Engine configuration means a unique combination of engine hardware and calibration within an engine family. Engines within a single engine configuration differ only with respect to normal production variability.

Engine family has the meaning given in § 1051.230.

Evaporative means relating to fuel emissions that result from permeation of fuel through the fuel system materials and from ventilation of the fuel system.

Excluded means relating to an engine that either:

(1) Has been determined not to be a nonroad engine, as specified in 40 CFR 1068.30; or

(2) Is a nonroad engine that is excluded from this part 1051 under the provisions of § 1051.5.

Exempted has the meaning given in 40 CFR 1068.30.

Exhaust-gas recirculation means a technology that reduces emissions by routing exhaust gases that had been exhausted from the combustion chamber(s) back into the engine to be mixed with incoming air before or during combustion. The use of valve timing to increase the amount of residual exhaust gas in the combustion chamber(s) that is mixed with incoming air before or during combustion is not considered exhaust-gas recirculation for the purposes of this part.

Family emission limit (FEL) means an emission level declared by the manufacturer to serve in place of an otherwise applicable emission standard under the ABT program in subpart H of this part. The family emission limit must be expressed to the same number of decimal places as the emission standard it replaces. The family emission limit serves as the emission standard for the engine family with respect to all required testing.

Fuel line means all hoses or tubing designed to contain liquid fuel or fuel vapor. This includes all hoses or tubing for the filler neck, for connections between dual fuel tanks, and for connecting a carbon canister to the fuel tank. This does not include hoses or tubing for routing crankcase vapors to the engine's intake or any other hoses or tubing that are open to the atmosphere.

Fuel system means all components involved in transporting, metering, and mixing the fuel from the fuel tank to the combustion chamber(s), including the fuel tank, fuel tank cap, fuel pump, fuel filters, fuel lines, carburetor or fuel-injection components, and all fuel-system vents. In the case where the fuel tank cap or other components (excluding fuel lines) are directly mounted on the fuel tank, they are considered to be a part of the fuel tank.

Fuel type means a general category of fuels such as gasoline or natural gas. There can be multiple grades within a single fuel type, such as winter-grade and all-season gasoline.

Good engineering judgment means judgments made consistent with generally accepted scientific and engineering principles and all available relevant information. See 40 CFR 1068.5 for the administrative process we use to evaluate good engineering judgment.

Hydrocarbon (HC) means the hydrocarbon group on which the emission standards are based for each fuel type. For alcohol-fueled engines, HC means total hydrocarbon equivalent (THCE). For all other engines, HC means nonmethane hydrocarbon (NMHC).

Identification number means a unique specification (for example, a model number/serial number combination) that allows someone to distinguish a particular vehicle or engine from other similar engines.

Low-hour means relating to an engine with stabilized emissions and represents the undeteriorated emission level. This would generally involve less than 24 hours or 240 kilometers of operation.

Manufacturer has the meaning given in section 216(1) of the Act. In general, this term includes any person who manufactures a vehicle or engine for sale in the United States or otherwise introduces a new vehicle or engine into commerce in the United States. This includes importers that import vehicles or engines for resale.

Maximum engine power has the meaning given in 40 CFR 90.3.

Maximum test power means the maximum brake power of an engine at test conditions.

Maximum test speed has the meaning given in 40 CFR 1065.1001.

Maximum test torque has the meaning given in 40 CFR 1065.1001.

Model year means one of the following things:

(1) For freshly manufactured vehicles (see definition of ''new,'' paragraph (1)), model year means one of the following:

(i) Calendar year.

(ii) Your annual new model production period if it is different than the calendar year. This must include January 1 of the calendar year for which the model year is named. It may not begin before January 2 of the previous calendar year and it must end by December 31 of the named calendar year.

(2) For an engine originally manufactured as a motor-vehicle engine or a stationary engine that is later intended to be used in a vehicle subject to the standards and requirements of this part 1051, model year means the calendar year in which the engine was originally produced (see definition of ''new,'' paragraph (2)).

(3) For a nonroad engine that has been previously placed into service in an application covered by 40 CFR part 90, 91, or 1048, where that engine is installed in a piece of equipment that is covered by this part 1051, model year means the calendar year in which the engine was originally produced (see definition of ''new ,'' paragraph (3)).

(4) For engines that are not freshly manufactured but are installed in new recreational vehicles, model year means the calendar year in which the engine is installed in the recreational vehicle (see definition of ''new,'' paragraph (4)).

(5) For imported engines:

(i) For imported engines described in paragraph (5)(i) of the definition of ''new,'' *model year* has the meaning given in paragraphs (1) through (4) of this definition.

(ii) For imported engines described in paragraph (5)(ii) of the definition of ''new,'' *model year* means the calendar year in which the vehicle is modified.

Motor vehicle has the meaning given in 40 CFR 85.1703(a).

New means relating to any of the following things:

(1) A freshly manufactured vehicle for which the ultimate purchaser has never received the equitable or legal title. This kind of vehicle might commonly be thought of as ''brand new.'' In the case of this paragraph (1), the vehicle becomes new when it is fully assembled for the first time. The engine is no longer new when the ultimate purchaser receives the title or the product is placed into service, whichever comes first.

(2) An engine originally manufactured as a motor-vehicle engine or a stationary engine that is later intended to be used in a vehicle subject to the standards and requirements of this part 1051. In this case, the engine is no longer a motor-vehicle or stationary engine and becomes new. The engine is no longer new when it is placed into service as a recreational vehicle covered by this part 1051.

(3) A nonroad engine that has been previously placed into service in an application covered by 40 CFR part 90, 91, or 1048, where that engine is installed in a piece of equipment that is covered by this part 1051. The engine is no longer new when it is placed into service in a recreational vehicle covered by this part 1051. For example, this would apply to a marine propulsion engine that is no longer used in a marine vessel.

(4) An engine not covered by paragraphs (1) through (3) of this definition that is intended to be installed in a new vehicle covered by this part 1051. The engine is no longer new when the ultimate purchaser receives a title for the vehicle or it is placed into service, whichever comes first. This generally includes installation of used engines in new recreational vehicles.

(5) An imported vehicle or engine, subject to the following provisions:

(i) An imported recreational vehicle or recreational-vehicle engine covered by a certificate of conformity issued under this part that meets the criteria of one or more of paragraphs (1) through (4) of this definition, where the original manufacturer holds the certificate, is new as defined by those applicable paragraphs.

(ii) An imported recreational vehicle or recreational-vehicle engine covered by a certificate of conformity issued under this part, where someone other than the original manufacturer holds the certificate (such as when the engine is modified after its initial assembly), becomes new when it is imported. It is no longer new when the ultimate purchaser receives a title for the vehicle or engine or it is placed into service, whichever comes first.

(iii) An imported recreational vehicle or recreational-vehicle engine that is not covered by a certificate of conformity issued under this part at the time of importation is new, but only if it was produced on or after the 2007 model year. This addresses uncertified engines and equipment initially placed into service that someone seeks to import into the United States. Importation of this kind of new nonroad engine (or equipment containing such an engine) is generally prohibited by 40 CFR part 1068.

Noncompliant means relating to a vehicle that was originally covered by a certificate of conformity, but is not in the certified configuration or otherwise does not comply with the conditions of the certificate.

Nonconforming means relating to vehicle not covered by a certificate of conformity that would otherwise be subject to emission standards.

Nonmethane hydrocarbon means the difference between the emitted mass of total hydrocarbons and the emitted mass of methane.

Nonroad means relating to nonroad engines or equipment that includes nonroad engines.

Nonroad engine has the meaning given in 40 CFR 1068.30. In general this means all internal-combustion engines except motor-vehicle engines, stationary engines, engines used solely for competition, or engines used in aircraft.

Off-highway motorcycle means a two-wheeled vehicle with a nonroad engine and a seat (excluding marine vessels and aircraft). (Note: highway motorcycles are regulated under 40 CFR part 86.)

Official emission result means the measured emission rate for an emission-data vehicle on a given duty cycle before the application of any deterioration factor, but after the applicability of regeneration adjustment factors.

Offroad utility vehicle means a nonroad vehicle that has four or more wheels, seating for two or more persons, is designed for operation over rough terrain, and has either a rear payload of 350 pounds or more or seating for six or more passengers. Vehicles intended primarily for recreational purposes that are not capable of transporting six passengers (such as dune buggies) are not offroad utility vehicles. (**Note:** § 1051.1(a) specifies that some offroad utility vehicles are required to meet the requirements that apply for all-terrain vehicles.)

Owners manual means a document or collection of documents prepared by the engine manufacturer for the owner or operator to describe appropriate engine maintenance, applicable warranties, and any other information related to operating or keeping the engine. The owners manual is typically provided to the ultimate purchaser at the time of sale.

Oxides of nitrogen has the meaning given in 40 CFR 1065.1001.

Phase 1 means relating to Phase 1 standards of §§ 1051.103, 1051.105, or 1051.107, or other Phase 1 standards specified in subpart B of this part.

Phase 2 means relating to Phase 2 standards of § 1051.103, or other Phase 2 standards specified in subpart B of this part.

Phase 3 means relating to Phase 3 standards of § 1051.103, or other Phase

3 standards specified in subpart B of this part.

Placed into service means put into initial use for its intended purpose.

Point of first retail sale means the location at which the initial retail sale occurs. This generally means an equipment dealership, but may also include an engine seller or distributor in cases where loose engines are sold to the general public for uses such as replacement engines.

Recreational means, for purposes of this part, relating to snowmobiles, all-terrain vehicles, off-highway motorcycles, and other vehicles that we regulate under this part. Note that 40 CFR part 90 applies to engines used in other recreational vehicles.

Revoke has the meaning given in 40 CFR 1068.30.

Round has the meaning given in 40 CFR 1065.1001, unless otherwise specified.

Scheduled maintenance means adjusting, repairing, removing, disassembling, cleaning, or replacing components or systems periodically to keep a part or system from failing, malfunctioning, or wearing prematurely. It also may mean actions you expect are necessary to correct an overt indication of failure or malfunction for which periodic maintenance is not appropriate.

Small-volume manufacturer means one of the following:

(1) For motorcycles and ATVs, a manufacturer that sold motorcycles or ATVs before 2003 and had annual U.S.-directed production of no more than 5,000 off-road motorcycles and ATVs (combined number) in 2002 and all earlier calendar years. For manufacturers owned by a parent company, the limit applies to the production of the parent company and all of its subsidiaries.

(2) For snowmobiles, a manufacturer that sold snowmobiles before 2003 and had annual U.S.-directed production of no more than 300 snowmobiles in 2002 and all earlier model years. For manufacturers owned by a parent company, the limit applies to the production of the parent company and all of its subsidiaries.

(3) A manufacturer that we designate to be a small-volume manufacturer under § 1051.635.

Snowmobile means a vehicle designed to operate outdoors only over snow-covered ground, with a maximum width of 1.5 meters or less.

Spark-ignition means relating to a gasoline-fueled engine or any other type of engine with a spark plug (or other sparking device) and with operating characteristics significantly similar to the theoretical Otto combustion cycle. Spark-ignition engines usually use a throttle to regulate intake air flow to control power during normal operation.

Suspend has the meaning given in 40 CFR 1068.30.

Test sample means the collection of engines selected from the population of an engine family for emission testing. This may include testing for certification, production-line testing, or in-use testing.

Test vehicle or engine means an engine in a test sample.

Total hydrocarbon means the combined mass of organic compounds measured by the specified procedure for measuring total hydrocarbon, expressed as a hydrocarbon with a hydrogen-to-carbon mass ratio of 1.85:1.

Total hydrocarbon equivalent means the sum of the carbon mass contributions of non-oxygenated hydrocarbons, alcohols and aldehydes, or other organic compounds that are measured separately as contained in a gas sample, expressed as exhaust hydrocarbon from petroleum-fueled engines. The hydrogen-to-carbon ratio of the equivalent hydrocarbon is 1.85:1.

Ultimate purchaser means, with respect to any new nonroad equipment or new nonroad engine, the first person who in good faith purchases such new nonroad equipment or new nonroad engine for purposes other than resale.

Ultraviolet light means electromagnetic radiation with a wavelength between 300 and 400 nanometers.

United States has the meaning given in 40 CFR 1068.30.

Upcoming model year means for an engine family the model year after the one currently in production.

U.S.-directed production volume means the number of vehicle units, subject to the requirements of this part, produced by a manufacturer for which the manufacturer has a reasonable assurance that sale was or will be made to ultimate purchasers in the United States. This includes vehicles for which the location of first retail sale is in a state that has applicable state emission regulations for that model year, unless we specify otherwise.

Useful life means the period during which a vehicle is required to comply with all applicable emission standards, specified as a given number of calendar years and kilometers (whichever comes first). In some cases, useful life is also limited by a given number of hours of engine operation. If an engine has no odometer (or hour meter), the specified number of kilometers (or hours) does not limit the period during which an in-use vehicle is required to comply with emission standards, unless the degree of service accumulation can be verified separately. The useful life for an engine family must be at least as long as both of the following:

(1) The expected average service life before the vehicle is remanufactured or retired from service.

(2) The minimum useful life value.

Void has the meaning given in 40 CFR 1068.30.

We (us, our) means the Administrator of the Environmental Protection Agency and any authorized representatives.

Wide-open throttle means maximum throttle opening. Unless this is specified at a given speed, it refers to maximum throttle opening at maximum speed. For electronically controlled or other engines with multiple possible fueling rates, wide-open throttle also means the maximum fueling rate at maximum throttle opening under test conditions.

■ 325. Section 1051.805 is amended by adding ''CFR'', ''HC'', and ''NARA'' to the table in alphabetical order to read as follows:

§ 1051.805 What symbols, acronyms, and abbreviations does this part use?

The following symbols, acronyms, and abbreviations apply to this part:

* * * * *

CFR—Code of Federal Regulations.

* * * * *

HC—hydrocarbon.

* * * * *

NARA—National Archives and Records Administration.

* * * * *

■ 326. Section 1051.810 is revised to read as follows:

§ 1051.810 What materials does this part reference?

Documents listed in this section have been incorporated by reference into this part. The Director of the Federal Register approved the incorporation by reference as prescribed in 5 U.S.C. 552(a) and 1 CFR part 51. Anyone may inspect copies at the U.S. EPA, Air and Radiation Docket and Information Center, 1301 Constitution Ave., NW., Room B102,EPA West Building, Washington, DC 20460 or at the National Archives and Records Administration (NARA). For information on the availability of this material at NARA, call 202–741–6030, or go to: *http://www.archives.gov/federal_register/code_of_federal_regulations/ibr_locations.html.*

(a) *ASTM material.* Table 1 of this section lists material from the American Society for Testing and Materials that we have incorporated by reference. The

first column lists the number and name of the material. The second column lists the sections of this part where we reference it. Anyone may purchase copies of these materials from the American Society for Testing and Materials, 100 Barr Harbor Dr., P.O. Box C700, West Conshohocken, PA 19428 or *www.astm.com*. Table 1 follows:

TABLE 1 OF § 1051.810.—ASTM MATERIALS

Document number and name	Part 1051 reference
ASTM D471–98, Standard Test Method for Rubber Property—Effect of Liquids	1051.501
ASTM D814–95 (reapproved 2000), Standard Test Method for RubberProperty Vapor Transmission of Volatile Liquids	1051.245

(b) *SAE material*. Table 2 of this section lists material from the Society of Automotive Engineering that we have incorporated by reference. The first column lists the number and name of the material. The second column lists the sections of this part where we reference it. Anyone may purchase copies of these materials from the Society of Automotive Engineers, 400 Commonwealth Drive, Warrendale, PA 15096 or *www.sae.org*. Table 2 follows:

TABLE 2 OF § 1051.810.—SAE MATERIALS

Document number and name	Part 1051 reference
SAE J30, Fuel and Oil Hoses, June 1998	1051.245, 1051.501
SAE J1930, Electrical/Electronic Systems Diagnostic Terms, Definitions, Abbreviations, and Acronyms, May 1998	1051.135
SAE J2260, Nonmetallic Fuel System Tubing with One or More Layers, November 1996	1051.245

■ 327. Section 1051.815 is revised to read as follows:

§ 1051.815 What provisions apply to confidential information?

(a) Clearly show what you consider confidential by marking, circling, bracketing, stamping, or some other method.

(b) We will store your confidential information as described in 40 CFR part 2. Also, we will disclose it only as specified in 40 CFR part 2. This applies both to any information you send us and to any information we collect from inspections, audits, or other site visits.

(c) If you send us a second copy without the confidential information, we will assume it contains nothing confidential whenever we need to release information from it.

(d) If you send us information without claiming it is confidential, we may make it available to the public without further notice to you, as described in 40 CFR 2.204.

■ 328. Section 1051.820 is revised to read as follows:

§ 1051.820 How do I request a hearing?

(a) You may request a hearing under certain circumstances, as described elsewhere in this part. To do this, you must file a written request, including a description of your objection and any supporting data, within 30 days after we make a decision.

(b) For a hearing you request under the provisions of this part, we will approve your request if we find that your request raises a substantial factual issue.

(c) If we agree to hold a hearing, we will use the procedures specified in 40 CFR part 1068, subpart G.

PART 1068—GENERAL COMPLIANCE PROVISIONS FOR NONROAD PROGRAMS

■ 329. The authority citation for part 1068 is revised to read as follows:

Authority: 42 U.S.C. 7401–7671q.

■ 330. Section 1068.10 is revised to read as follows:

§ 1068.10 What provisions apply to confidential information?

(a) Clearly show what you consider confidential by marking, circling, bracketing, stamping, or some other method.

(b) We will store your confidential information as described in 40 CFR part 2. Also, we will disclose it only as specified in 40 CFR part 2. This applies both to any information you send us and to any information we collect from inspections, audits, or other site visits.

(c) If you send us a second copy without the confidential information, we will assume it contains nothing confidential whenever we need to release information from it.

(d) If you send us information without claiming it is confidential, we may make it available to the public without further notice to you, as described in 40 CFR 2.204.

■ 331. Section 1068.30 is amended by revising the definition for ''United States'' and adding definitions for ''Days'', ''Defeat device'', ''Equipment'', ''Exempted'', ''Good engineering judgment'', ''Motor vehicle'', ''Revoke'', ''Suspend'', and ''Void'' in alphabetical order to read as follows:

§ 1068.30 What definitions apply to this part?

* * * * *

Days means calendar days, including weekends and holidays.

Defeat device means has the meaning given in the standard-setting part.

* * * * *

Equipment means any vehicle, vessel, or other type of equipment that is subject to the requirements of this part, or that uses an engine that is subject to the requirements of this part.

* * * * *

Exempted means relating to an engine that is not required to meet otherwise applicable standards. Exempted engines must conform to regulatory conditions specified for an exemption in this part 1068 or in the standard-setting part. Exempted engines are deemed to be ''subject to'' the standards of the standard-setting part, even though they are not required to comply with the otherwise applicable requirements. Engines exempted with respect to a certain tier of standards may be required to comply with an earlier tier of standards as a condition of the exemption; for example, engines exempted with respect to Tier 3 standards may be required to comply with Tier 1 or Tier 2 standards.

Good engineering judgment means judgments made consistent with generally accepted scientific and engineering principles and all available relevant information. See 40 CFR 1068.5

for the administrative process we use to evaluate good engineering judgment.

* * * * *

Motor vehicle has the meaning given in 40 CFR 85.1703(a).

* * * * *

Revoke means to terminate the certificate or an exemption for an engine family. If we revoke a certificate or exemption, you must apply for a new certificate or exemption before continuing to introduce the affected engines into commerce. This does not apply to engines you no longer possess.

* * * * *

Suspend means to temporarily discontinue the certificate or an exemption for an engine family. If we suspend a certificate, you may not introduce into commerce engines from that engine family unless we reinstate the certificate or approve a new one. If we suspend an exemption, you may not introduce into commerce engines that were previously covered by the exemption unless we reinstate the exemption.

* * * * *

United States means the States, the District of Columbia, the Commonwealth of Puerto Rico, the Commonwealth of the Northern Mariana Islands, Guam, American Samoa, and the U.S. Virgin Islands.

Void means to invalidate a certificate or an exemption ab initio. If we void a certificate, all the engines introduced into commerce under that engine family for that model year are considered noncompliant, and you are liable for each engine introduced into commerce under the certificate and may face civil or criminal penalties or both. This applies equally to all engines in the engine family, including engines introduced into commerce before we voided the certificate. If we void an exemption, all the engines introduced into commerce under that exemption are considered uncertified (or nonconforming), and you are liable for each engine introduced into commerce under the exemption and may face civil or criminal penalties or both. You may not introduce into commerce any additional engines using the voided exemption.

* * * * *

■ 332. Section 1068.101 is amended by revising the introductory text and paragraphs (a) and (b) to read as follows:

§ 1068.101 What general actions does this regulation prohibit?

This section specifies actions that are prohibited and the maximum civil penalties that we can assess for each violation. The maximum penalty values listed in paragraphs (a) and (b) of this section are shown for calendar year 2004. As described in paragraph (e) of this section, maximum penalty limits for later years are set forth in 40 CFR part 19.

(a) The following prohibitions and requirements apply to manufacturers of new engines and manufacturers of equipment containing these engines, except as described in subparts C and D of this part:

(1) *Introduction into commerce.* You may not sell, offer for sale, or introduce or deliver into commerce in the United States or import into the United States any new engine or equipment after emission standards take effect for that engine or equipment, unless it has a valid certificate of conformity for its model year and the required label or tag. You also may not take any of the actions listed in the previous sentence with respect to any equipment containing an engine subject to this part's provisions, unless the engine has a valid and appropriate certificate of conformity and the required engine label or tag. For purposes of this paragraph (a)(1), an appropriate certificate of conformity is one that applies for the same model year as the model year of the equipment (except as allowed by § 1068.105(a)), covers the appropriate category of engines (such as locomotive or CI marine), and conforms to all requirements specified for equipment in the standard-setting part. The requirements of this paragraph (a)(1) also cover new engines you produce to replace an older engine in a piece of equipment, unless the engine qualifies for the replacement-engine exemption in § 1068.240. We may assess a civil penalty up to $32,500 for each engine in violation.

(2) *Reporting and recordkeeping.* This chapter requires you to record certain types of information to show that you meet our standards. You must comply with these requirements to make and maintain required records (including those described in § 1068.501). You may not deny us access to your records or the ability to copy your records if we have the authority to see or copy them. Also, you must give us the required reports or information without delay. Failure to comply with the requirements of this paragraph is prohibited. We may assess a civil penalty up to $32,500 for each day you are in violation.

(3) *Testing and access to facilities.* You may not keep us from entering your facility to test engines or inspect if we are authorized to do so. Also, you must perform the tests we require (or have the tests done for you). Failure to perform this testing is prohibited. We may assess a civil penalty up to $32,500 for each day you are in violation.

(b) The following prohibitions apply to everyone with respect to the engines to which this part applies:

(1) *Tampering.* You may not remove or disable a device or element of design that may affect an engine's emission levels. This restriction applies before and after the engine is placed in service. Section 1068.120 describes how this applies to rebuilding engines. For a manufacturer or dealer, we may assess a civil penalty up to $32,500 for each engine in violation. For anyone else, we may assess a civil penalty up to $2,750 for each engine in violation. This prohibition does not apply in any of the following situations:

(i) You need to repair an engine and you restore it to proper functioning when the repair is complete.

(ii) You need to modify an engine to respond to a temporary emergency and you restore it to proper functioning as soon as possible.

(iii) You modify a new engine that another manufacturer has already certified to meet emission standards and recertify it under your own engine family. In this case you must tell the original manufacturer not to include the modified engines in the original engine family.

(2) *Defeat devices.* You may not knowingly manufacture, sell, offer to sell, or install, an engine part that bypasses, impairs, defeats, or disables the engine's control the emissions of any pollutant. We may assess a civil penalty up to $2,750 for each part in violation.

(3) *Stationary engines.* For an engine that is excluded from any requirements of this chapter because it is a stationary engine, you may not move it or install it in any mobile equipment, except as allowed by the provisions of this chapter. You may not circumvent or attempt to circumvent the residence-time requirements of paragraph (2)(iii) of the nonroad engine definition in § 1068.30. We may assess a civil penalty up to $32,500 for each day you are in violation.

(4) *Competition engines.* For an uncertified engine or piece of equipment that is excluded or exempted from any requirements of this chapter because it is to be used solely for competition, you may not use it in a manner that is inconsistent with use solely for competition. We may assess a civil penalty up to $32,500 for each day you are in violation.

(5) *Importation.* You may not import an uncertified engine or piece of equipment if it is defined to be new in the standard-setting part and it is built

after emission standards start to apply in the United States. We may assess a civil penalty up to $32,500 for each day you are in violation. Note the following:

(i) The definition of new is broad for imported engines; uncertified engines and equipment (including used engines and equipment) are generally considered to be new when imported.

(ii) Engines that were originally manufactured before applicable EPA standards were in effect are generally not subject to emission standards.

(6) *Warranty*. You must meet your obligation to honor your emission-related warranty under § 1068.115 and to fulfill any applicable responsibilities to recall engines under § 1068.505. Failure to meet these obligations is prohibited. We may assess a civil penalty up to $32,500 for each engine in violation.

* * * * *

■ 333. Section 1068.105 is amended by revising paragraph (a) and renumbering the second paragraph (c)(1)(iii) as (c)(1)(iv) to read as follows:

§ 1068.105 What other provisions apply to me specifically if I manufacture equipment needing certified engines?

* * * * *

(a) *Transitioning to new engine-based standards.* If new emission standards apply in a given model year, your equipment in that model year must have engines that are certified to the new standards, except that you may use up your normal inventory of earlier engines that were built before the date of the new or changed standards. For example, if your normal inventory practice is to keep on hand a one-month supply of engines based on your upcoming production schedules, and a new tier of standard starts to apply for the 2015 model year, you may order engines based on your normal inventory requirements late in the engine manufacturer's 2014 model year and install those engines in your equipment, regardless of the date of installation. Also, if your model year starts before the end of the calendar year preceding new standards, you may use engines from the previous model year for those units you produce before January 1 of the year that new standards apply. If emission standards do not change in a given model year, you may continue to install engines from the previous model year without restriction. You may not circumvent the provisions of § 1068.101(a)(1) by stockpiling engines that were built before new or changed standards take effect. Note that this allowance does not apply for equipment subject to equipment-based standards.

* * * * *

■ 334. Section 1068.110 is amended by revising paragraph (e) to read as follows:

§ 1068.110 What other provisions apply to engines in service?

* * * * *

(e) *Warranty and maintenance.* Owners are responsible for properly maintaining their engines; however, owners may make warranty claims against the manufacturer for all expenses related to diagnosing and repairing or replacing emission-related parts, as described in § 1068.115. The warranty period begins when the engine is first placed into service. See the standard-setting part for specific requirements. It is a violation of the Act for anyone to disable emission controls; see § 1068.101(b)(1) and the standard-setting part.

■ 335. Section 1068.115 is amended by revising paragraph (a) to read as follows:

§ 1068.115 When must manufacturers honor emission-related warranty claims?

* * * * *

(a) As a certifying manufacturer, you may deny warranty claims only for failures that have been caused by the owner's or operator's improper maintenance or use, by accidents for which you have no responsibility, or by acts of God. For example, you would not need to honor warranty claims for failures that have been directly caused by the operator's abuse of an engine or the operator's use of the engine in a manner for which it was not designed, and are not attributable to you in any way.

* * * * *

■ 336. Section 1068.125 is amended by revising paragraph (b) introductory text to read as follows:

§ 1068.125 What happens if I violate the regulations?

* * * * *

(b) *Administrative penalties.* Instead of bringing a civil action, we may assess administrative penalties if the total is less than $270,000 against you individually. This maximum penalty may be greater if the Administrator and the Attorney General jointly determine that is appropriate for administrative penalty assessment, or if the limit is adjusted under 40 CFR part 19. No court may review such a determination. Before we assess an administrative penalty, you may ask for a hearing (subject to 40 CFR part 22).The Administrator may compromise or remit, with or without conditions, any administrative penalty that may be imposed under this section.

* * * * *

■ 337. Section 1068.201 is amended by revising paragraphs (c) and (i) to read as follows:

§ 1068.201 Does EPA exempt or exclude any engines from the prohibited acts?

* * * * *

(c) If you use an exemption under this subpart, we may require you to add a permanent label to your exempted engines. You may ask us to modify these labeling requirements if it is appropriate for your engine.

* * * * *

(i) If you want to take an action with respect to an exempted or excluded engine that is prohibited by the exemption or exclusion, such as selling it, you need to certify the engine. We will issue a certificate of conformity if you send us an application for certification showing that you meet all the applicable requirements from the standard-setting part and pay the appropriate fee. Also, in some cases, we may allow manufacturers to modify the engine as needed to make it identical to engines already covered by a certificate. We would base such an approval on our review of any appropriate documentation. These engines must have emission control information labels that accurately describe their status.

■ 338. Section 1068.240 is amended by revising paragraph (d) to read as follows:

§ 1068.240 What are the provisions for exempting new replacement engines?

* * * * *

(d) If the engine being replaced was certified to emission standards less stringent than those in effect when you produce the replacement engine, add a permanent label with your corporate name and trademark and the following language:

THIS ENGINE COMPLIES WITH U.S. EPA NONROAD EMISSION REQUIREMENTS FOR [Insert appropriate year reflecting when the applicable tier of emission standards for the replaced engine began to apply] ENGINES UNDER 40 CFR 1068.240. SELLING OR INSTALLING THIS ENGINE FOR ANY PURPOSE OTHER THAN TO REPLACE A NONROAD ENGINE BUILT BEFORE JANUARY 1, [Insert appropriate year reflecting when the next tier of emission standards began to apply] MAY BE A VIOLATION OF FEDERAL LAW SUBJECT TO CIVIL PENALTY.

* * * * *

■ 339. Section 1068.245 is amended by revising paragraphs (a)(4) and (f)(4) to read as follows:

§ 1068.245 What temporary provisions address hardship due to unusual circumstances?

(a) * * *

(4) No other allowances are available under the regulations in this chapter to avoid the impending violation, including the provisions of § 1068.250.

* * * * *

(f) * * *

(4) One of the following statements:

(i) If the engine does not meet any emission standards: ''THIS ENGINE IS EXEMPT UNDER 40 CFR 1068.245 FROM EMISSION STANDARDS AND RELATED REQUIREMENTS.''.

(ii) If the engine meets alternate emission standards as a condition of an exemption under this section, we may specify a different statement to identify the alternate emission standards.

■ 340. Section 1068.250 is amended by revising paragraph (k)(4) to read as follows:

§ 1068.250 What are the provisions for extending compliance deadlines for small-volume manufacturers under hardship?

* * * * *

(k) * * *

(4) One of the following statements:

(i) If the engine does not meet any emission standards: ''THIS ENGINE IS EXEMPT UNDER 40 CFR 1068.250 FROM EMISSION STANDARDS AND RELATED REQUIREMENTS.''.

(ii) If the engine meets alternate emission standards as a condition of an exemption under this section, we may specify a different statement to identify the alternate emission standards.

■ 341. Section 1068.255 is amended by revising paragraphs (a) introductory text and (b)(4) to read as follows:

§ 1068.255 What are the provisions for exempting engines for hardship for equipment manufacturers and secondary engine manufacturers?

* * * * *

(a) *Equipment exemption.* As an equipment manufacturer, you may ask for approval to produce exempted equipment for up to 12 months. We will generally limit this to the first year that new or revised emission standards apply. Send the Designated Officer a written request for an exemption before you are in violation. In your request, you must show you are not at fault for the impending violation and that you would face serious economic hardship if we do not grant the exemption. This exemption is not available under this paragraph (a) if you manufacture the engine you need for your own equipment or if complying engines are available from other engine manufacturers that could be used in your equipment, unless we allow it elsewhere in this chapter. We may impose other conditions, including provisions to use an engine meeting less stringent emission standards or to recover the lost environmental benefit. In determining whether to grantthe exemptions, we will consider all relevant factors, including the following:

* * * * *

(b) * * *

(4) One of the following statements:

(i) If the engine does not meet any emission standards: ''THIS ENGINE IS EXEMPT UNDER 40 CFR 1068.255 FROM EMISSION STANDARDS AND RELATED REQUIREMENTS.''.

(ii) If the engine meets alternate emission standards as a condition of an exemption under this section, we may specify a different statement to identify the alternate emission standards.

* * * * *

■ 342. Section 1068.260 is amended by revising paragraphs (a)(5), (a)(6), and (f) and adding paragraphs (g) and (h) to read as follows:

§ 1068.260 What are the provisions for temporarily exempting engines for delegated final assembly?

(a) * * *

(5) Ship the aftertreatment components directly to the equipment manufacturer, or arrange for separate shipment by the component manufacturer to the equipment manufacturer.

(6) Take appropriate additional steps to ensure that all engines will be in their certified configuration when installed by the equipment manufacturer. At a minimum do the following:

(i) Obtain annual affidavits from every equipment manufacturer to whom you sell engines under this section. Include engines that you sell through distributors or dealers. The affidavits must list the part numbers of the aftertreatment devices that equipment manufacturers install on each engine they purchase from you under this section.

(ii) If you sell more than 50 engines per model year under this section, you must annually audit four equipment manufacturers to whom you sell engines under this section. To select individual equipment manufacturers, divide all the affected equipment manufacturers into quartiles based on the number of engines they buy from you; select a single equipment manufacturer from each quartile each model year. Vary the equipment manufacturers you audit from year to year, though you may repeat an audit in a later model year if you find or suspect that a particular equipment manufacturer is not properly installing aftertreatment devices. If you sell engines to fewer than 16 equipment manufacturers under the provisions of this section, you may instead set up a plan to audit each equipment manufacturer on average once every four model years. Audits must involve the assembling companies' facilities, procedures, and production records to monitor their compliance with your instructions, must include investigation of some assembled engines, and must confirm that the number of aftertreatment devices shipped were sufficient for the number of engines produced. Where an equipment manufacturer is not located in the United States, you may conduct the audit at a distribution or port facility in the United States. You must keep records of these audits for five years after the end of the model year and provide a report to us describing any uninstalled or improperly installed aftertreatment components. Send us these reports within 90 days of the audit, except as specified in paragraph (d) of this section.

(iii) If you sell up to 50 engines per model year under this section, you must conduct audits as described in paragraph (a)(6)(ii) of this section or propose an alternative plan for ensuring that equipment manufacturers properly install aftertreatment devices.

(iv) If you produce engines and use them to produce equipment under the provisions of this section, you must take steps to ensure that your facilities, procedures, and production records are set up to ensure compliance with the provisions of this section, but you may meet your auditing responsibilities under this paragraph (a)(6) by maintaining a database showing how you pair aftertreatment components with the appropriate engines.

* * * * *

(f) You are liable for the in-use compliance of any engine that is exempt under this section.

(g) It is a violation of the Act for any person to complete assembly of the exempted engine without complying fully with the installation instructions.

(h) You may ask us to provide a temporary exemption to allow you to complete production of your engines at different facilities, as long as you maintain control of the engines until they are in their certified configuration. We may require you to take specific steps to ensure that such engines are in their certified configuration before reaching the ultimate purchaser. You may request an exemption under this paragraph (h) in your application for

certification, or in a separate submission to the Designated Compliance Officer.

■ 343. A new § 1068.265 is added to subpart C to read as follows:

§ 1068.265 What provisions apply to engines that are conditionally exempted from certification?

Engines produced under an exemption for replacement engines (§ 1068.240) or for hardship (§ 1068.245, § 1068.250, or § 1068.255) may need to meet alternate emission standards as a condition of the exemption. The standard-setting part may similarly exempt engines from all certification requirements, or allow us to exempt engines from all certification requirements for certain cases, but require the engines to meet alternate standards. In these cases, all the following provisions apply:

(a) Your engines must meet the alternate standards we specify in (or pursuant to) the exemption section, and all other requirements applicable to engines that are subject to such standards.

(b) You need not apply for and receive a certificate for the exempt engines. However, you must comply with all the requirements and obligations that would apply to the engines if you had received a certificate of conformity for them, unless we specifically waive certain requirements.

(c) You must have emission data from test engines using the appropriate procedures that demonstrate compliance with the alternate standards, unless the engines are identical in all material respects to engines that you have previously certified to standards that are the same as, or more stringent than, the alternate standards.

(d) Unless we specify otherwise elsewhere in the standard-setting part, you must meet the labeling requirements in the standard-setting part, with the following exceptions:

(1) Modify the engine-family designation by eliminating the character that identifies the model year.

(2) See the provisions of the applicable exemption for appropriate language to replace the compliance statement otherwise required in the standard-setting part.

(e) You may not generate emission credits for averaging, banking, or trading with engines meeting requirements under the provisions of this section.

(f) Keep records to show that you meet the alternate standards, as follows:

(1) If your exempted engines are identical to previously certified engines, keep your most recent application for certification for the certified engine family.

(2) If you previously certified a similar engine family, but have modified the exempted engine in a way that changes it from its previously certified configuration, keep your most recent application for certification for the certified engine family, a description of the relevant changes, and any test data or engineering evaluations that support your conclusions.

(3) If you have not previously certified a similar engine family, keep all the records we specify for the application for certification and any additional records the standard-setting part requires you to keep.

(g) We may require you to send us an annual report of the engines you produce under this section.

■ 344. Section 1068.305 is amended by revising paragraph (a) to read as follows:

§ 1068.305 How do I get an exemption or exclusion for imported engines?

(a) Complete the appropriate EPA declaration form before importing any nonconforming engine. These forms are available on the Internet at *http://www.epa.gov/OTAQ/imports/* or by phone at 734–214–4100.

* * * * *

■ 345. Section 1068.315 is amended by revising paragraphs (e), (f), and (g), adding and reserving paragraph (h), and adding paragraphs (i), and (j) to read as follows:

§ 1068.315 What are the permanent exemptions for imported engines?

* * * * *

(e) *Small-volume manufacturer exemption.* You may import a nonconforming engine if we grant hardship relief for a small-volume manufacturer, as described in § 1068.250.

(f) *Equipment-manufacturer hardship exemption.* You may import a nonconforming engine if we grant an exemption for the transition to new or revised emission standards, as described in § 1068.255.

(g) *Delegated-assembly exemption.* You may import a nonconforming engine for final assembly under the provisions of § 1068.260. However, this does not include the staged-assembly provisions of § 1068.260(h); see § 1068.330 for importing incomplete engines.

(h) [Reserved]

(i) *Identical configuration exemption.* You may import a nonconforming engine if it is identical to certified engines produced by the same manufacturer, subject to the following provisions:

(1) You may import only the following engines under this exemption:

(i) Large nonroad spark-ignition engines (see part 1048 of this chapter).

(ii) Recreational nonroad spark-ignition engines and equipment (see part 1051 of this chapter).

(iii) Land-based nonroad diesel engines (see part 1039 of this chapter).

(2) You must meet all the following criteria:

(i) You have owned the engine for at least six months.

(ii) You agree not to sell, lease, donate, trade, or otherwise transfer ownership of the engine for at least five years, or until the engine is eligible for the exemption in paragraph (g) of this section. During this period, the only acceptable way to dispose of the engine is to destroy or export it.

(iii) You use data or evidence sufficient to show that the engine is in a configuration that is identical to an engine the original manufacturer has certified to meet emission standards that apply at the time the manufacturer finished assembling or modifying the engine in question. If you modify the engine to make it identical, you must completely follow the original manufacturer's written instructions.

(3) We will tell you in writing if we find the information insufficient to show that the engine is eligible for this exemption. In this case, we will not consider your request further until you address our concerns.

(j) *Ancient engine exemption.* If you are not the original engine manufacturer, you may import a nonconforming engine that is subject to a standard-setting part and was first manufactured at least 21 years earlier, as long as it is still in its original configuration.

■ 346. Section 1068.325 is amended by revising the introductory text to read as follows:

§ 1068.325 What are the temporary exemptions for imported engines?

You may import engines under certain temporary exemptions, subject to the conditions in this section. We may ask the U.S. Customs Service to require a specific bond amount to make sure you comply with the requirements of this subpart. You may not sell or lease one of these engines while it is in the United States. You must eventually export the engine as we describe in this section unless you get a certificate of conformity for it or it qualifies for one of the permanent exemptions in § 1068.315. Section 1068.330 specifies an additional temporary exemption allowing you to import certain engines you intend to modify.

* * * * *

■ 347. Section 1068.330 is amended by revising the section heading and paragraph (c) and adding paragraph (a)(4) to read as follows:

§ 1068.330 How do I import engines requiring further assembly?

* * * * *

(a) * * *

(4) You import a complete or partially complete engine for installation in equipment subject to equipment-based standards for which you have either a certificate of conformity or an exemption that allows you to sell the equipment.

* * * * *

(c) If we approve a temporary exemption for an engine, you may import it under the conditions in this section. If you are not a certificate holder, we may ask the U.S. Customs Service to require a specific bond amount to make sure you comply with the requirements of this subpart.

* * * * *

■ 348. Section 1068.335 is amended by revising paragraph (b) to read as follows:

§ 1068.335 What are the penalties for violations?

* * * * *

(b) *Temporarily imported engines.* If you do not comply with the provisions of this subpart for a temporary exemption under § 1068.325 or § 1068.330, you may forfeit the total amount of the bond in addition to the sanctions we identify in paragraph (a) of this section. We will consider an engine to be exported if it has been destroyed or delivered to the U.S. Customs Service for export or other disposition under applicable Customs laws and regulations. EPA or the U.S. Customs Service may offer you a grace period to allow you to export a temporarily exempted engine without penalty after the exemption expires.

■ 349. Section 1068.410 is amended by adding paragraph (j) to read as follows:

§ 1068.410 How must I select and prepare my engines?

* * * * *

(j) *Retesting after reaching a fail decision.* You may retest your engines once a fail decision for the audit has been reached based on the first test on each engine under § 1068.420(c). You may test each engine up to a total of three times, but you must perform the same number of tests on each engine. You may further operate the engine to stabilize emission levels before testing, subject to the provisions of paragraph (f) of this section. We may approve retesting at other times if you send us a request with satisfactory justification.

■ 350. Section 1068.505 is amended by adding paragraph (g) to read as follows:

§ 1068.505 How does the recall program work?

* * * * *

(g) For purposes of recall, *owner* means someone who owns an engine affected by a remedial plan or someone who owns a piece of equipment that has one of these engines.

■ 351. Section 1068.510 is amended by revising paragraph (a)(10) to read as follows:

§ 1068.510 How do I prepare and apply my remedial plan?

(a) * * *

(10) If your employees or authorized warranty agents will not be doing the work, state who will and describe their qualifications.

* * * * *

§ 1068.540 [Removed]

■ 352. Section 1068.540 is removed.

■ 353. Part 1065 is revised to read as follows:

PART 1065—ENGINE-TESTING PROCEDURES

Subpart A—Applicability and General Provisions

Sec.

1065.1 Applicability.
1065.2 Submitting information to EPA under this part.
1065.5 Overview of this part 1065 and its relationship to the standard-setting part.
1065.10 Other procedures.
1065.12 Approval of alternate procedures.
1065.15 Overview of procedures for laboratory and field testing.
1065.20 Units of measure and overview of calculations.
1065.25 Recordkeeping.

Subpart B—Equipment Specifications

1065.101 Overview.
1065.110 Work inputs and outputs, accessory work, and operator demand.
1065.120 Fuel properties and fuel temperature and pressure.
1065.122 Engine cooling and lubrication.
1065.125 Engine intake air.
1065.127 Exhaust gas recirculation.
1065.130 Engine exhaust.
1065.140 Dilution for gaseous and PM constituents.
1065.145 Gaseous and PM probes, transfer lines, and sampling system components.
1065.150 Continuous sampling.
1065.170 Batch sampling for gaseous and PM constituents.
1065.190 PM-stabilization and weighing environments for gravimetric analysis.
1065.195 PM-stabilization environment for in-situ analyzers.

Subpart C—Measurement Instruments

1065.201 Overview and general provisions.
1065.202 Data updating, recording, and control.
1065.205 Performance specifications for measurement instruments.

Measurement of Engine Parameters and Ambient Conditions

1065.210 Work input and output sensors.
1065.215 Pressure transducers, temperature sensors, and dewpoint sensors.

Flow-Related Measurements

1065.220 Fuel flow meter.
1065.225 Intake-air flow meter.
1065.230 Raw exhaust flow meter.
1065.240 Dilution air and diluted exhaust flow meters.
1065.245 Sample flow meter for batch sampling.
1065.248 Gas divider.

CO and CO_2 Measurements

1065.250 Nondispersive infra-red analyzer.

Hydrocarbon Measurements

1065.260 Flame ionization detector.
1065.265 Nonmethane cutter.
1065.267 Gas chromatograph.

NO_X Measurements

1065.270 Chemiluminescent detector.
1065.272 Nondispersive ultraviolet analyzer.

O_2 Measurements

1065.280 Paramagnetic and magnetopneumatic O_2 detection analyzers.

Air-to-Fuel Ratio Measurements

1065.284 Zirconia (ZrO_2) analyzer.

PM Measurements

1065.290 PM gravimetric balance.
1065.295 PM inertial balance for field-testing analysis.

Subpart D—Calibrations and Verifications

1065.301 Overview and general provisions.
1065.303 Summary of required calibration and verifications
1065.305 Verifications for accuracy, repeatability, and noise.
1065.307 Linearity verification.
1065.308 Continuous gas analyzer system-response and updating-recording verification.
1065.309 Continuous gas analyzer uniform response verification.

Measurement of Engine Parameters and Ambient Conditions

1065.310 Torque calibration.
1065.315 Pressure, temperature, and dewpoint calibration.

Flow-Related Measurements

1065.320 Fuel-flow calibration.
1065.325 Intake-flow calibration.
1065.330 Exhaust-flow calibration.
1065.340 Diluted exhaust flow (CVS) calibration.
1065.341 CVS and batch sampler verification (propane check).
1065.345 Vacuum-side leak verification.

CO and CO_2 Measurements

1065.350 H_2O interference verification for CO_2 NDIR analyzers.
1065.355 H_2O and CO_2 interference verification for CO NDIR analyzers.

Hydrocarbon Measurements

1065.360 FID optimization and verification.
1065.362 Non-stoichiometric raw exhaust FID O_2 interference verification.
1065.365 Nonmethane cutter penetration fractions.

NO_X Measurements

1065.370 CLD CO_2 and H_2O quench verification.
1065.372 NDUV analyzer HC and H_2O interference verification.
1065.376 Chiller NO_2 penetration.
1065.378 NO_2-to-NO converter conversion verification.

PM Measurements

1065.390 PM balance verifications and weighing process verification.
1065.395 Inertial PM balance verifications.

Subpart E—Engine Selection, Preparation, and Maintenance

1065.401 Test engine selection.
1065.405 Test engine preparation and maintenance.
1065.410 Maintenance limits for stabilized test engines.
1065.415 Durability demonstration.

Subpart F—Performing an Emission Test in the Laboratory

1065.501 Overview.
1065.510 Engine mapping.
1065.512 Duty cycle generation.
1065.514 Cycle-validation criteria.
1065.520 Pre-test verification procedures and pre-test data collection.
1065.525 Engine starting, restarting, and shutdown.
1065.530 Emission test sequence.
1065.545 Validation of proportional flow control for batch sampling.
1065.550 Gas analyzer range validation, drift validation, and drift correction.
1065.590 PM sample preconditioning and tare weighing.
1065.595 PM sample post-conditioning and total weighing.

Subpart G—Calculations and Data Requirements

1065.601 Overview.
1065.602 Statistics.
1065.610 Duty cycle generation.
1065.630 1980 international gravity formula.
1065.640 Flow meter calibration calculations.
1065.642 SSV, CFV, and PDP molar flow rate calculations.
1065.645 Amount of water in an ideal gas.
1065.650 Emission calculations.
1065.655 Chemical balances of fuel, intake air, and exhaust.
1065.659 Removed water correction.
1065.660 THC and NMHC determination.
1065.665 THCE and NMHCE determination.
1065.66 Dilution air background emission correction.
1065.670 NO_X intake-air humidity and temperature corrections.
1065.672 Drift correction.
1065.675 CLD quench verification calculations.
1065.690 Buoyancy correction for PM sample media.
1065.695 Data requirements.

Subpart H—Engine Fluids, Test Fuels, Analytical Gases and Other Calibration Standards

1065.701 General requirements for test fuels.
1065.703 Distillate diesel fuel.
1065.705 Residual fuel. [Reserved]
1065.710 Gasoline.
1065.715 Natural gas.
1065.720 Liquefied petroleum gas.
1065.740 Lubricants.
1065.745 Coolants.
1065.750 Analytical Gases.
1065.790 Mass standards.

Subpart I—Testing with Oxygenated Fuels

1065.801 Applicability.
1065.805 Sampling system.
1065.845 Response factor determination.
1065.850 Calculations.

Subpart J—Field Testing and Portable Emission Measurement Systems

1065.901 Applicability.
1065.905 General provisions.
1065.910 PEMS auxiliary equipment for field testing.
1065.915 PEMS instruments.
1065.920 PEMS Calibrations and verifications.
1065.925 PEMS preparation for field testing.
1065.930 Engine starting, restarting, and shutdown.
1065.935 Emission test sequence for field testing.
1065.940 Emission calculations.

Subpart K—Definitions and Other Reference Information

1065.1001 Definitions.
1065.1005 Symbols, abbreviations, acronyms, and units of measure.
1065.1010 Reference materials.

Authority: 42 U.S.C. 7401–7671q.

Subpart A—Applicability and General Provisions

§ 1065.1 Applicability.

(a) This part describes the procedures that apply to testing we require for the following engines or for vehicles using the following engines:

(1) Model year 2010 and later heavy-duty highway engines we regulate under 40 CFR part 86. For earlier model years, manufacturers may use the test procedures in this part or those specified in 40 CFR part 86, subpart N, according to § 1065.10.

(2) Land-based nonroad diesel engines we regulate under 40 CFR part 1039.

(3) Large nonroad spark-ignition engines we regulate under 40 CFR part 1048.

(4) Vehicles we regulate under 40 CFR part 1051 (such as snowmobiles and off-highway motorcycles) based on engine testing. See 40 CFR part 1051, subpart F, for standards and procedures that are based on vehicle testing.

(b) The procedures of this part may apply to other types of engines, as described in this part and in the standard-setting part.

(c) This part is addressed to you as a manufacturer, but it applies equally to anyone who does testing for you.

(d) Paragraph (a) of this section identifies the parts of the CFR that define emission standards and other requirements for particular types of engines. In this part, we refer to each of these other parts generically as the ''standard-setting part.'' For example, 40 CFR part 1051 is always the standard-setting part for snowmobiles.

(e) Unless we specify otherwise, the terms ''procedures'' and ''test procedures'' in this part include all aspects of engine testing, including the equipment specifications, calibrations, calculations, and other protocols and procedural specifications needed to measure emissions.

(f) For vehicles subject to this part and regulated under vehicle-based standards, use good engineering judgment to interpret the term ''engine'' in this part to include vehicles where appropriate.

(g) For additional information regarding these test procedures, visit our Web site at *www.epa.gov*, and in particular *http://www.epa.gov/otaq/testingregs.htm.*

§ 1065.2 Submitting information to EPA under this part.

(a) You are responsible for statements and information in your applications for certification, requests for approved procedures, selective enforcement audits, laboratory audits, production-line test reports, field test reports, or any other statements you make to us related to this part 1065.

(b) In the standard-setting part and in 40 CFR 1068.101, we describe your obligation to report truthful and complete information and the consequences of failing to meet this obligation. See also 18 U.S.C. 1001 and 42 U.S.C. 7413(c)(2).

(c) We may void any certificates associated with a submission of information if we find that you intentionally submitted false, incomplete, or misleading information. For example, if we find that you intentionally submitted incomplete information to mislead EPA when requesting approval to use alternate test procedures, we may void the certificates for all engines families certified based on emission data collected using the alternate procedures.

(d) We may require an authorized representative of your company to approve and sign the submission, and to

certify that all of the information submitted is accurate and complete.

(e) See 40 CFR 1068.10 for provisions related to confidential information. Note however that under 40 CFR 2.301, emission data is generally not eligible for confidential treatment.

§ 1065.5 Overview of this part 1065 and its relationship to the standard-setting part.

(a) This part specifies procedures that apply generally to testing various categories of engines. See the standard-setting part for directions in applying specific provisions in this part for a particular type of engine. Before using this part's procedures, read the standard-setting part to answer at least the following questions:

(1) What duty cycles must I use for laboratory testing?

(2) Should I warm up the test engine before measuring emissions, or do I need to measure cold-start emissions during a warm-up segment of the duty cycle?

(3) Which exhaust gases do I need to measure?

(4) Does testing require full-flow dilute sampling? Is raw sampling prohibited? Is partial-flow sampling prohibited?

(5) Do any unique specifications apply for test fuels?

(6) What maintenance steps may I take before or between tests on an emission-data engine?

(7) Do any unique requirements apply to stabilizing emission levels on a new engine?

(8) Do any unique requirements apply to test limits, such as ambient temperatures or pressures?

(9) Is field testing required, and are there different emission standards or procedures that apply to field testing?

(10) Are there any emission standards specified at particular engine-operating conditions or ambient conditions?

(11) Do any unique requirements apply for durability testing?

(b) The testing specifications in the standard-setting part may differ from the specifications in this part. In cases where it is not possible to comply with both the standard-setting part and this part, you must comply with the specifications in the standard-setting part. The standard-setting part may also allow you to deviate from the procedures of this part for other reasons.

(c) The following table shows how this part divides testing specifications into subparts:

This subpart . . .	Describes these specifications or procedures . . .
Subpart A	Applicability and general provisions.
Subpart B	Equipment for testing.
Subpart C	Measurement instruments for testing.
Subpart D	Calibration and performance verifications for measurement systems.
Subpart E	How to prepare engines for testing, including service accumulation.
Subpart F	How to run an emission test.
Subpart G	Test procedure calculations.
Subpart H	Fuels, engine fluids, analytical gases, and other calibration standards for testing.
Subpart I	Special procedures related to oxygenated fuels.
Subpart J	How to test with portable emission measurement systems (PEMS).
Subpart K	Definitions, abbreviations, and other reference information.

§ 1065.10 Other procedures.

(a) *Your testing.* The procedures in this part apply for all testing you do to show compliance with emission standards, with certain exceptions listed in this section. In some other sections in this part, we allow you to use other procedures (such as less precise or less accurate procedures) if they do not affect your ability to show that your engines comply with the applicable emission standards. This generally requires emission levels to be far enough below the applicable emission standards so that any errors caused by greater imprecision or inaccuracy do not affect your ability to state unconditionally that the engines meet all applicable emission standards.

(b) *Our testing.* These procedures generally apply for testing that we do to determine if your engines comply with applicable emission standards. We may perform other testing as allowed by the Act.

(c) *Exceptions.* We may allow or require you to use procedures other than those specified in this part in the following cases, which may apply to laboratory testing, field testing, or both. We intend to publicly announce when we allow or require such exceptions. All of the test procedures noted here as exceptions to the specified procedures are considered generically as ''other procedures.'' Note that the terms ''special procedures'' and ''alternate procedures'' have specific meanings; ''special procedures'' are those allowed by § 1065.10(c)(2) and ''alternate procedures'' are those allowed by § 1065.10(c)(7).

(1) The objective of the procedures in this part is to produce emission measurements equivalent to those that would result from measuring emissions during in-use operation using the same engine configuration as installed in a vehicle. However, in unusual circumstances these procedures may result in measurements that do not represent in-use operation. You must notify us if good engineering judgment indicates that the specified procedures cause unrepresentative emission measurements for your engines. Note that you need not notify us of unrepresentative aspects of the test procedure if measured emissions are equivalent to in-use emissions. This provision does not obligate you to pursue new information regarding the different ways your engine might operate in use, nor does it obligate you to collect any other in-use information to verify whether or not these test procedures are representative of your engine's in-use operation. If you notify us of unrepresentative procedures under this paragraph (c)(1), we will cooperate with you to establish whether and how the procedures should be appropriately changed to result in more representative measurements. While the provisions of this paragraph (c)(1) allow us to be responsive to issues as they arise, we would generally work toward making these testing changes generally applicable through rulemaking. We will allow reasonable lead time for compliance with any resulting change in procedures. We will consider the following factors in determining the importance of pursuing changes to the procedures:

(i) Whether supplemental emission standards or other requirements in the standard-setting part address the type of operation of concern or otherwise prevent inappropriate design strategies.

(ii) Whether the unrepresentative aspect of the procedures affect your ability to show compliance with the applicable emission standards.

(iii) The extent to which the established procedures require the use of emission-control technologies or strategies that are expected to ensure a comparable degree of emission control under the in-use operation that differs from the specified procedures.

(2) You may request to use special procedures if your engine cannot be tested using the specified procedures. We will approve your request if we determine that it would produce emission measurements that represent in-use operation and we determine that it can be used to show compliance with the requirements of the standard-setting part.

The following situations illustrate examples that may require special procedures:

(i) Your engine cannot operate on the specified duty cycle. In this case, tell us in writing why you cannot satisfactorily test your engine using this part's procedures and ask to use a different approach.

(ii) Your electronic control module requires specific input signals that are not available during dynamometer testing. In this case, tell us in writing what signals you will simulate, such as vehicle speed or transmission signals, and explain why these signals are necessary for representative testing.

(3) In a given model year, you may use procedures required for later model year engines without request. If you upgrade your testing facility in stages, you may rely on a combination of procedures for current and later model year engines as long as you can ensure, using good engineering judgment, that the combination you use for testing does not affect your ability to show compliance with the applicable emission standards.

(4) In a given model year, you may ask to use procedures allowed for earlier model year engines. We will approve this only if you show us that using the procedures allowed for earlier model years does not affect your ability to show compliance with the applicable emission standards.

(5) You may ask to use emission data collected using other procedures, such as those of the California Air Resources Board or the International Organization for Standardization. We will approve this only if you show us that using these other procedures does not affect your ability to show compliance with the applicable emission standards.

(6) During the 12 months following the effective date of any change in the provisions of this part 1065, you may ask to use data collected using procedures specified in the previously applicable version of this part 1065. This paragraph (c)(6) does not restrict the use of carryover certification data otherwise allowed by the standard-setting part.

(7) You may request to use alternate procedures that are equivalent to allowed procedures, or more accurate or more precise than allowed procedures. You may request to use a particular device or method for laboratory testing even though it was originally designed for field testing. The following provisions apply to requests for alternate procedures:

(i) *Applications.* Follow the instructions in § 1065.12.

(ii) *Submission.* Submit requests in writing to the Designated Compliance Officer.

(iii) *Notification.* We may approve your request by telling you directly, or we may issue guidance announcing our approval of a specific alternate procedure, which would make additional requests for approval unnecessary.

(d) If we require you to request approval to use other procedures under paragraph (c) of this section, you may not use them until we approve your request.

§ 1065.12 Approval of alternate procedures.

(a) To get approval for an alternate procedure under § 1065.10(c), send the Designated Compliance Officer an initial written request describing the alternate procedure and why you believe it is equivalent to the specified procedure. We may approve your request based on this information alone, or, as described in this section, we may ask you to submit to us in writing supplemental information showing that your alternate procedure is consistently and reliably at least as accurate and repeatable as the specified procedure.

(b) We may make our approval under this section conditional upon meeting other requirements or specifications. We may limit our approval, for example, to certain time frames, specific duty cycles, or specific emission standards. Based upon any supplemental information we receive after our initial approval, we may amend a previously approved alternate procedure to extend, limit, or discontinue its use. We intend to publicly announce alternate procedures that we approve.

(c) Although we will make every effort to approve only alternate procedures that completely meet our requirements, we may revoke our approval of an alternate procedure if new information shows that it is significantly not equivalent to the specified procedure.

If we do this, we will grant time to switch to testing using an allowed procedure, considering the following factors:

(1) The cost, difficulty, and availability to switch to a procedure that we allow.

(2) The degree to which the alternate procedure affects your ability to show that your engines comply with all applicable emission standards.

(3) Any relevant factors considered in our initial approval.

(d) If we do not approve your proposed alternate procedure based on the information in your initial request, we may ask you to send the following information to fully evaluate your request:

(1) *Theoretical basis.* Give a brief technical description explaining why you believe the proposed alternate procedure should result in emission measurements equivalent to those using the specified procedure. You may include equations, figures, and references. You should consider the full range of parameters that may affect equivalence. For example, for a request to use a different NO_X measurement procedure, you should theoretically relate the alternate detection principle to the specified detection principle over the expected concentration ranges for NO, NO_2, and interference gases. For a request to use a different PM measurement procedure, you should explain the principles by which the alternate procedure quantifies particulate mass similarly to the specified procedures. For any proportioning or integrating procedure, such as a partial-flow dilution system, you should compare the alternate procedure's theoretical response to the expected response of the specified procedures.

(2) *Technical description.* Describe briefly any hardware or software needed to perform the alternate procedure. You may include dimensioned drawings, flowcharts, schematics, and component specifications. Explain any necessary calculations or other data manipulation.

(3) *Procedure execution.* Describe briefly how to perform the alternate procedure and recommend a level of training an operator should have to achieve acceptable results.

Summarize the installation, calibration, operation, and maintenance procedures in a step-by-step format. Describe how any calibration is performed using NIST-traceable standards or other similar standards we approve. Calibration must be specified by using known quantities and must not be specified as a comparison with other allowed procedures.

(4) *Data-collection techniques.* Compare measured emission results using the proposed alternate procedure and the specified procedure, as follows:

(i) Both procedures must be calibrated independently to NIST-traceable standards or to other similar standards we approve.

(ii) Include measured emission results from all applicable duty cycles. Measured emission results should show that the test engine meets all applicable emission standards according to specified procedures.

(iii) Use statistical methods to evaluate the emission measurements,

such as those described in paragraph (e) of this section.

(e) We may give you specific directions regarding methods for statistical analysis, or we may approve other methods that you propose. Absent any other directions from us, use a t-test and an F-test calculated according to § 1065.602 to evaluate whether your proposed alternate procedure is equivalent to the specified procedure. We recommend that you consult a statistician if you are unfamiliar with these statistical tests. Perform the tests as follows:

(1) Repeat measurements for all applicable duty cycles at least seven times for each procedure. You may use laboratory duty cycles to evaluate field-testing procedures.

Be sure to include all available results to evaluate the precision and accuracy of the proposed alternate procedure, as described in § 1065.2.

(2) Demonstrate the accuracy of the proposed alternate procedure by showing that it passes a two-sided t-test. Use an unpaired t-test, unless you show that a paired t-test is appropriate under both of the following provisions:

(i) For paired data, the population of the paired differences from which you sampled paired differences must be independent. That is, the probability of any given value of one paired difference is unchanged by knowledge of the value of another paired difference. For example, your paired data would violate this requirement if your series of paired differences showed a distinct increase or decrease that was dependent on the time at which they were sampled.

(ii) For paired data, the population of paired differences from which you sampled the paired differences must have a normal (i.e., Gaussian) distribution. If the population of paired difference is not normally distributed, consult a statistician for a more appropriate statistical test, which may include transforming the data with a mathematical function or using some kind of non-parametric test.

(3) Show that t is less than the critical t value, t_{crit}, tabulated in § 1065.602, for the following confidence intervals:

(i) 90% for a proposed alternate procedure for laboratory testing.

(ii) 95% for a proposed alternate procedure for field testing.

(4) Demonstrate the precision of the proposed alternate procedure by showing that it passes an F-test. Use a set of at least seven samples from the reference procedure and a set of at least seven samples from the alternate procedure to perform an F-test. The sets must meet the following requirements:

(i) Within each set, the values must be independent. That is, the probability of any given value in a set must be unchanged by knowledge of another value in that set. For example, your data would violate this requirement if a set showed a distinct increase or decrease that was dependent upon the time at which they were sampled.

(ii) For each set, the population of values from which you sampled must have a normal (i.e., Gaussian) distribution. If the population of values is not normally distributed, consult a statistician for a more appropriate statistical test, which may include transforming the data with a mathematical function or using some kind of non-parametric test.

(iii) The two sets must be independent of each other. That is, the probability of any given value in one set must be unchanged by knowledge of another value in the other set. For example, your data would violate this requirement if one value in a set showed a distinct increase or decrease that was dependent upon a value in the other set. Note that a trend of emission changes from an engine would not violate this requirement.

(iv) If you collect paired data for the paired t-test in paragraph (e)(2) in this section, use caution when selecting sets from paired data for the F-test. If you do this, select sets that do not mask the precision of the measurement procedure. We recommend selecting such sets only from data collected using the same engine, measurement instruments, and test cycle.

(5) Show that F is less than the critical F value, F_{crit}, tabulated in § 1065.602. If you have several F-test results from several sets of data, show that the mean F-test value is less than the mean critical F value for all the sets. Evaluate F_{crit}, based on the following confidence intervals:

(i) 90% for a proposed alternate procedure for laboratory testing.

(ii) 95% for a proposed alternate procedure for field testing.

§ 1065.15 Overview of procedures for laboratory and field testing.

This section outlines the procedures to test engines that are subject to emission standards.

(a) In the standard-setting part, we set brake-specific emission standards in g/(kW·hr) (or g/(hp·hr)), for the following constituents:

(1) Total oxides of nitrogen, NO_X.

(2) Hydrocarbons (HC), which may be expressed in the following ways:

(i) Total hydrocarbons, THC.

(ii) Nonmethane hydrocarbons, NMHC, which results from subtracting methane (CH_4) from THC.

(iii) Total hydrocarbon-equivalent, THCE, which results from adjusting THC mathematically to be equivalent on a carbon-mass basis.

(iv) Nonmethane hydrocarbon-equivalent, NMHCE, which results from adjusting NMHC mathematically to be equivalent on a carbon-mass basis.

(3) Particulate mass, PM.

(4) Carbon monoxide, CO.

(b) Note that some engines are not subject to standards for all the emission constituents identified in paragraph (a) of this section.

(c) We set brake-specific emission standards over test intervals, as follows:

(1) *Engine operation.* Engine operation is specified over a test interval. A test interval is the time over which an engine's total mass of emissions and its total work are determined. Refer to the standard-setting part for the specific test intervals that apply to each engine. Testing may involve measuring emissions and work during the following types of engine operation:

(i) *Laboratory testing.* Under this type of testing, you determine brake-specific emissions for duty-cycle testing by using an engine dynamometer in a laboratory. This typically consists of one or more test intervals, each defined by a duty cycle, which is a sequence of speeds and torques that an engine must follow. If the standard-setting part allows it, you may also simulate field testing by running on an engine dynamometer in a laboratory.

(ii) *Field testing.* This type of testing consists of normal in-use engine operation while an engine is installed in a vehicle. The standard-setting part specifies how test intervals are defined for field testing.

(2) *Constituent determination.* Determine the total mass of each constituent over a test interval by selecting from the following methods:

(i) *Continuous sampling.* In continuous sampling, measure the constituent's concentration continuously from raw or dilute exhaust. Multiply this concentration by the continuous (raw or dilute) flow rate at the emission sampling location to determine the constituent's flow rate. Sum the constituent's flow rate continuously over the test interval. This sum is the total mass of the emitted constituent.

(ii) *Batch sampling.* In batch sampling, continuously extract and store a sample of raw or dilute exhaust for later measurement. Extract a sample proportional to the raw or dilute exhaust flow rate. You may extract and store a proportional sample of exhaust in an appropriate container, such as a

bag, and then measure HC, CO, and NO_X concentrations in the container after the test interval. You may deposit PM from proportionally extracted exhaust onto an appropriate substrate, such as a filter. In this case, divide the PM by the amount of filtered exhaust to calculate the PM concentration. Multiply batch sampled concentrations by the total (raw or dilute) flow from which it was extracted during the test interval. This product is the total mass of the emitted constituent.

(iii) *Combined sampling.* You may use continuous and batch sampling simultaneously during a test interval, as follows:

(A) You may use continuous sampling for some constituents and batch sampling for others.

(B) You may use continuous and batch sampling for a single constituent, with one being a redundant measurement. See § 1065.201 for more information on redundant measurements.

(3) *Work determination.* Determine work over a test interval by one of the following methods:

(i) *Speed and torque.* For laboratory testing, synchronously multiply speed and brake torque to calculate instantaneous values for engine brake power. Sum engine brake power over a test interval to determine total work.

(ii) *Fuel consumed and brake-specific fuel consumption.* Directly measure fuel consumed or calculate it with chemical balances of the fuel, intake air, and exhaust. To calculate fuel consumed by a chemical balance, you must also measure either intake-air flow rate or exhaust flow rate. Divide the fuel consumed during a test interval by the brake-specific fuel consumption to determine work over the test interval. For laboratory testing, calculate the brake-specific fuel consumption using fuel consumed and speed and torque over a test interval. For field testing, refer to the standard-setting part and § 1065.915 for selecting an appropriate value for brake-specific fuel consumption.

(d) Refer to § 1065.650 for calculations to determine brake-specific emissions.

(e) The following figure illustrates the allowed measurement configurations described in this part 1065:

BILLING CODE 6560–50–P

Figure 1 of §1065.15—Default test procedures and other specified procedures.

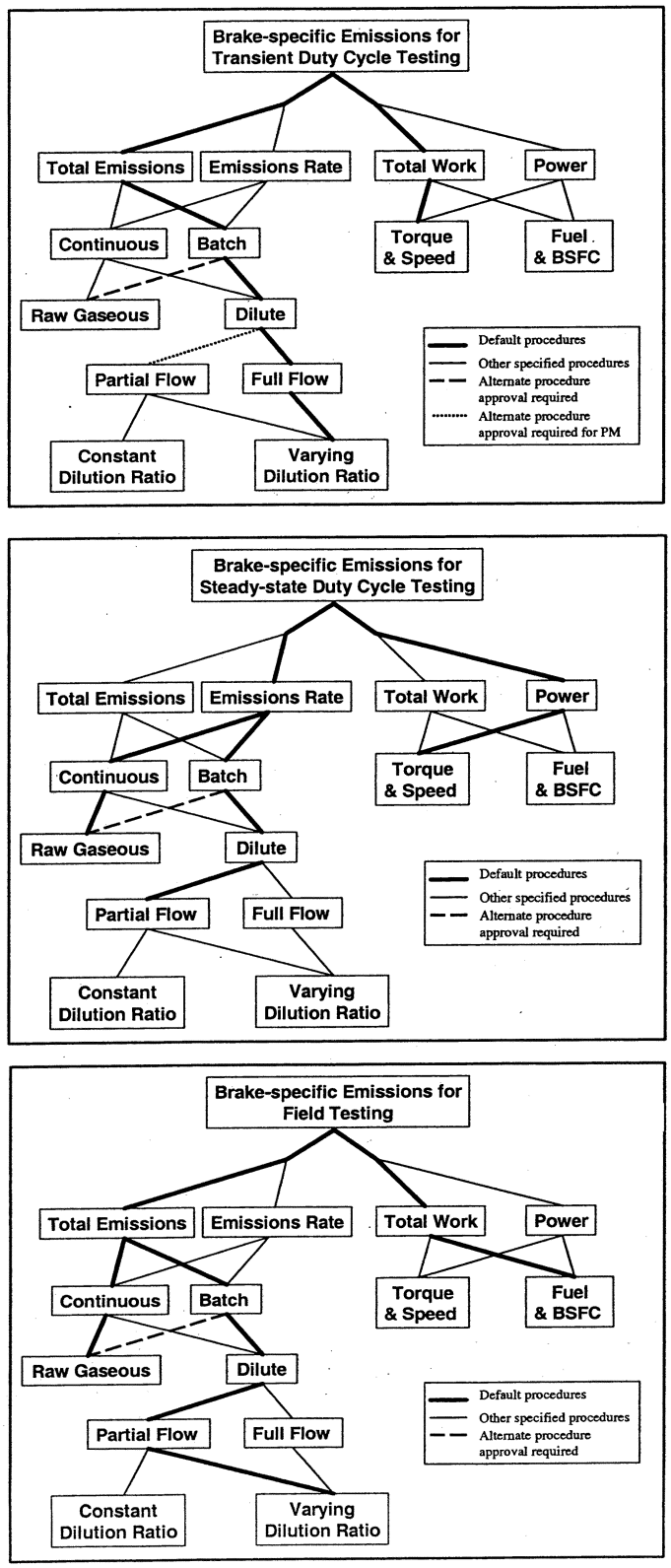

§ 1065.20 Units of measure and overview of calculations.

(a) *System of units*. The procedures in this part generally follow the International System of Units (SI), as detailed in NIST Special Publication 811, 1995 Edition, ''Guide for the Use of the International System of Units (SI),'' which we incorporate by reference in § 1065.1010. This document is available on the Internet at *http://physics.nist.gov/Pubs/SP811/contents.html*. Note the following exceptions:

(1) We designate rotational frequency, f_n, of an engine's crankshaft in revolutions per minute (rev/min), rather than the SI unit of reciprocal seconds (1/s). This is based on the commonplace use of rev/min in many engine dynamometer laboratories. Also, we use the symbol f_n to identify rotational frequency in rev/min, rather than the SI convention of using n. This avoids confusion with our usage of the symbol n for a molar quantity.

(2) We designate brake-specific emissions in grams per kilowatt-hour (g/(kW·hr)), rather than the SI unit of grams per megajoule (g/MJ). This is based on the fact that engines are generally subject to emission standards expressed in g/kW·hr. If we specify engine standards in grams per horsepower·hour (g/(hp·hr)) in the standard-setting part, convert units as specified in paragraph (d) of this section.

(3) We designate temperatures in units of degrees Celsius (°C) unless a calculation requires an absolute temperature. In that case, we designate temperatures in units of Kelvin (K). For conversion purposes throughout this part, 0 °C equals 273.15 K.

(b) *Concentrations*. This part does not rely on amounts expressed in parts per million or similar units. Rather, we express such amounts in the following SI units:

(1) For ideal gases, μmol/mol, formerly ppm (volume).

(2) For all substances, $\mu m^3/m^3$, formerly ppm (volume).

(3) For all substances, mg/kg, formerly ppm (mass).

(c) *Absolute pressure*. Measure absolute pressure directly or calculate it as the sum of atmospheric pressure plus a differential pressure that is referenced to atmospheric pressure.

(d) *Units conversion*. Use the following conventions to convert units:

(1) *Testing*. You may record values and perform calculations with other units. For testing with equipment that involves other units, use the conversion factors from NIST Special Publication 811, as described in paragraph (a) of this section.

(2) *Humidity*. In this part, we identify humidity levels by specifying dewpoint, which is the temperature at which pure water begins to condense out of air. Use humidity conversions as described in § 1065.645.

(3) *Emission standards*. If your standard is in g/(hp·hr) units, convert kW to hp before any rounding by using the conversion factor of 1 hp (550 ft·lbf/s) = 0.7456999 kW. Round the final value for comparison to the applicable standard.

(e) *Rounding*. Unless the standard-setting part specifies otherwise, round only final values, not intermediate values. Round values to the number of significant digits necessary to match the number of decimal places of the applicable standard or specification. For information not related to standards or specifications, use good engineering judgment to record the appropriate number of significant digits.

(f) *Interpretation of ranges*. In this part, we specify ranges such as ''±10% of maximum pressure'', ''(40 to 50) kPa'', or ''(30 ±10) kPa''. Interpret a range as a tolerance unless we explicitly identify it as an accuracy, repeatability, linearity, or noise specification. See § 1065.1001 for the definition of Tolerance.

(g) *Scaling of specifications with respect to a standard*. Because this part 1065 is applicable to a wide range of engines and emission standards, some of the specifications in this part are scaled with respect to an engine's emission standard or maximum power. This ensures that the specification will be adequate to determine compliance, but not overly burdensome by requiring unnecessarily high-precision equipment. Many of these specifications are given with respect to a ''flow-weighted mean'' that is expected at the standard. Flow-weighted mean is the mean of a quantity after it is weighted proportional to a corresponding flow rate. For example, if a gas concentration is measured continuously from the raw exhaust of an engine, its flow-weighted mean concentration is the sum of the products of each recorded concentration times its respective exhaust flow rate, divided by the sum of the recorded flow rates. As another example, the bag concentration from a CVS system is the same as the flow-weighted mean concentration, because the CVS system itself flow-weights the bag concentration. Refer to § 1065.602 for information needed to estimate and calculate flow-weighted means.

§ 1065.25 Recordkeeping.

The procedures in this part include various requirements to record data or other information. Refer to the standard-setting part regarding recordkeeping requirements. If the standard-setting part does not specify recordkeeping requirements, store these records in any format and on any media and keep them readily available for one year after you send an associated application for certification, or one year after you generate the data if they do not support an application for certification. You must promptly send us organized, written records in English if we ask for them. We may review them at any time.

Subpart B—Equipment Specifications

§ 1065.101 Overview.

(a) This subpart specifies equipment, other than measurement instruments, related to emission testing. The provisions of this subpart apply for all testing in laboratories. See subpart J of this part to determine which of the provisions of this subpart apply for field testing. This includes three broad categories of equipment—dynamometers, engine fluid systems (such as fuel and intake-air systems), and emission-sampling hardware.

(b) Other related subparts in this part identify measurement instruments (subpart C), describe how to evaluate the performance of these instruments (subpart D), and specify engine fluids and analytical gases (subpart H).

(c) Subpart J of this part describes additional equipment that is specific to field testing.

(d) Figures 1 and 2 of this section illustrate some of the possible configurations of laboratory equipment. These figures are schematics only; we do not require exact conformance to them. Figure 1 of this section illustrates the equipment specified in this subpart and gives some references to sections in this subpart. Figure 2 of this section illustrates some of the possible configurations of a full-flow dilution, constant-volume sampling (CVS) system. Not all possible CVS configurations are shown.

BILLING CODE 6560–50–P

Figure 1 of §1065.101—Engine dynamometer laboratory equipment.

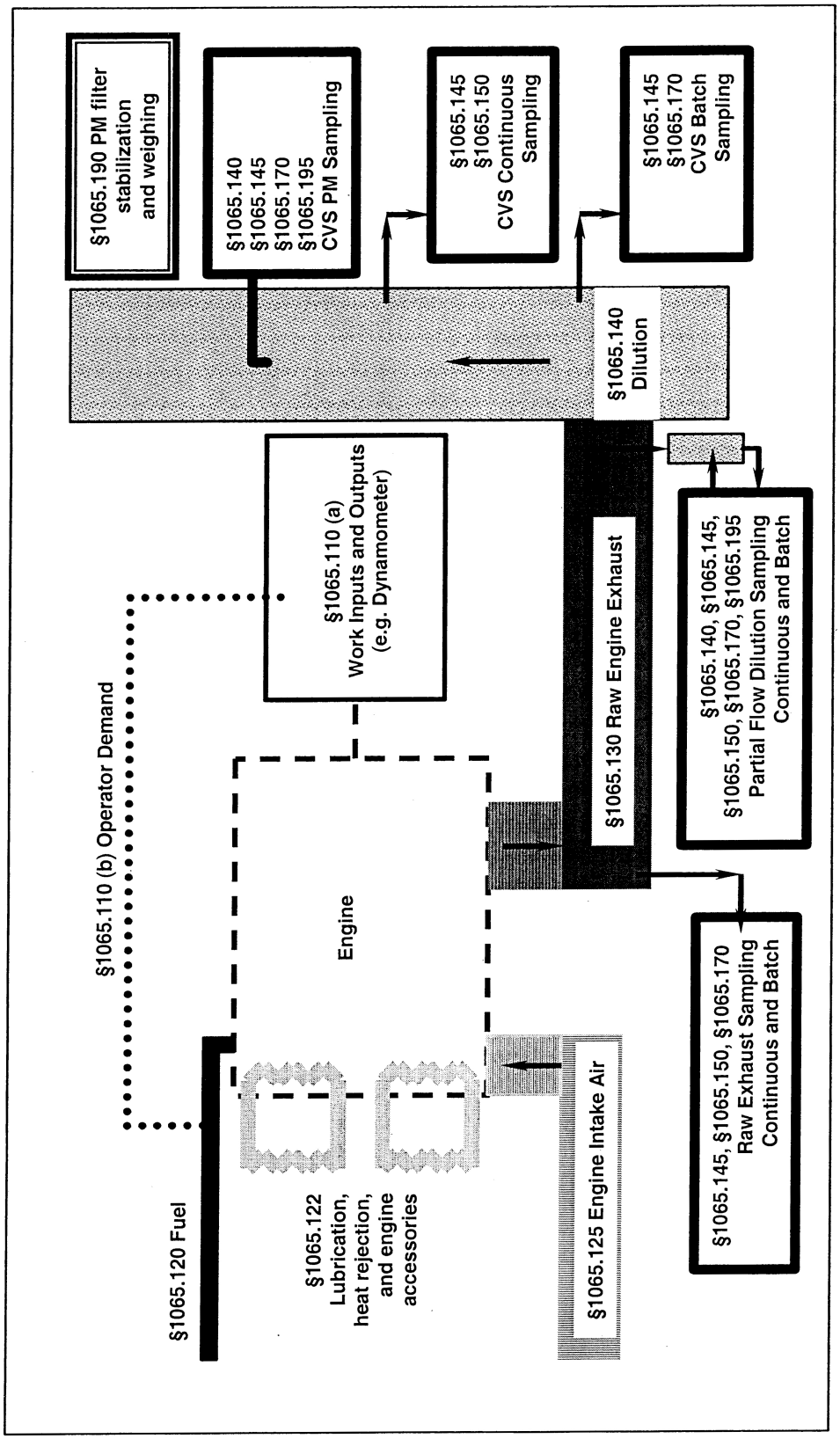

Figure 2 of §1065.101—Examples of some full-flow dilution sampling configurations.

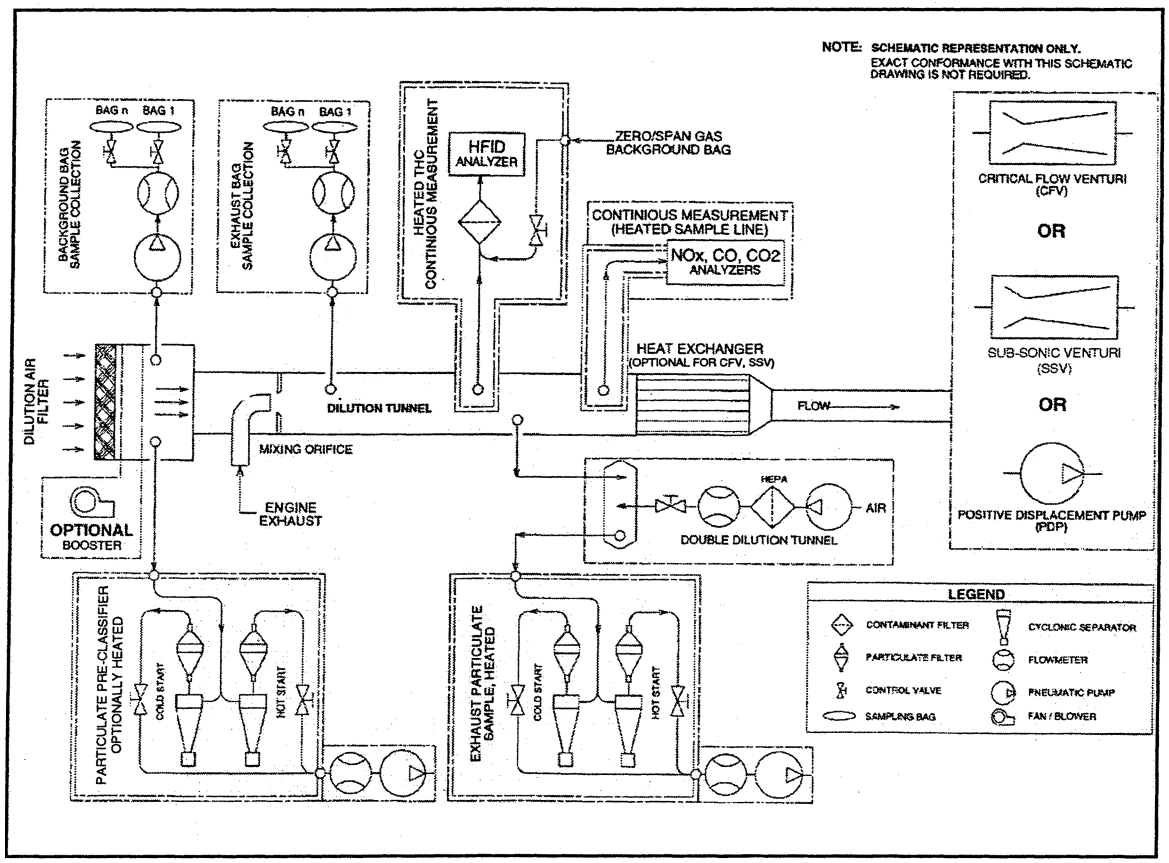

BILLING CODE 6560–50–C

§ 1065.110 Work inputs and outputs, accessory work, and operator demand.

(a) *Work.* Use good engineering judgment to simulate all engine work inputs and outputs as they typically would operate in use. Account for work inputs and outputs during an emission test by measuring them; or, if they are small, you may show by engineering analysis that disregarding them does not affect your ability to determine the net work output by more than ±0.5% of the net reference work output over the test interval. Use equipment to simulate the specific types of work, as follows:

(1) *Shaft work.* Use an engine dynamometer that is able to meet the cycle-validation criteria in § 1065.514 over each applicable duty cycle.

(i) You may use eddy-current and water-brake dynamometers for any testing that does not involve engine motoring, which is identified by negative torque commands in a reference duty cycle. See the standard setting part for reference duty cycles that are applicable to your engine.

(ii) You may use alternating-current or direct-current motoring dynamometers for any type of testing.

(iii) You may use one or more dynamometers.

(2) *Electrical work.* Use one or more of the following to simulate electrical work:

(i) Use storage batteries or capacitors that are of the type and capacity installed in use.

(ii) Use motors, generators, and alternators that are of the type and capacity installed in use.

(iii) Use a resistor load bank to simulate electrical loads.

(3) *Pump, compressor, and turbine work.* Use pumps, compressors, and turbines that are of the type and capacity installed in use. Use working fluids that are of the same type and thermodynamic state as normal in-use operation.

(b) *Laboratory work inputs.* You may supply any laboratory inputs of work to the engine. For example, you may supply electrical work to the engine to operate a fuel system, and as another example you may supply compressor work to the engine to actuate pneumatic valves. We may ask you to show by engineering analysis your accounting of laboratory work inputs to meet the criterion in paragraph (a) of this section.

(c) *Engine accessories.* You must either install or account for the work of engine accessories required to fuel, lubricate, or heat the engine, circulate coolant to the engine, or to operate aftertreatment devices. Operate the engine with these accessories installed or accounted for during all testing operations, including mapping. If these accessories are not powered by the engine during a test, account for the work required to perform these functions from the total work used in brake-specific emission calculations. For air-cooled engines only, subtract externally powered fan work from total work. We may ask you to show by engineering analysis your accounting of engine accessories to meet the criterion in paragraph (a) of this section.

(d) *Engine starter.* You may install a production-type starter.

(e) *Operator demand for shaft work.* Command the operator demand and the dynamometer(s) to follow the prescribed duty cycle with set points for engine

speed and torque at 5 Hz (or more frequently) for transient testing or 1 Hz (or more frequently) for steady-state testing. Use a mechanical or electronic input to control operator demand such that the engine is able to meet the validation criteria in § 1065.514 over each applicable duty cycle. Record feedback values for engine speed and torque at 5 Hz or more frequently for evaluating performance relative to the cycle validation criteria. Using good engineering judgment, you may improve control of operator demand by altering on-engine speed and torque controls. However, if these changes result in unrepresentative testing, you must notify us and recommend other test procedures under § 1065.10(c)(1).

§ 1065.120 Fuel properties and fuel temperature and pressure.

(a) Use fuels as specified in subpart H of this part.

(b) If the engine manufacturer specifies fuel temperature and pressure tolerances and the location where they are to be measured, then measure the fuel temperature and pressure at the specified location to show that you are within these tolerances throughout testing.

(c) If the engine manufacturer does not specify fuel temperature and pressure tolerances, use good engineering judgment to set and control fuel temperature and pressure in a way that represents typical in-use fuel temperatures and pressures.

§ 1065.122 Engine cooling and lubrication.

(a) *Engine cooling.* Cool the engine during testing so its intake-air, oil, coolant, block, and head temperatures are within their expected ranges for normal operation. You may use laboratory auxiliary coolers and fans.

(1) If you use laboratory auxiliary fans you must account for work input to the fan(s) according to § 1065.110.

(2) See § 1065.125 for more information related to intake-air cooling.

(3) See § 1065.127 for more information related to exhaust gas recirculation cooling.

(4) Measure temperatures at the manufacturer-specified locations. If the manufacturer does not specify temperature measurement locations, then use good engineering judgment to monitor intake-air, oil, coolant, block, and head temperatures to ensure that they are in their expected ranges for normal operation.

(b) *Forced cooldown.* You may install a forced cooldown system for an engine and an exhaust aftertreatment device according to § 1065.530(a)(1).

(c) *Lubricating oil.* Use lubricating oils specified in § 1065.740.

(d) *Coolant.* For liquid-cooled engines, use coolant as specified in § 1065.745.

§ 1065.125 Engine intake air.

(a) Use the intake-air system installed on the engine or one that represents a typical in-use configuration. This includes the charge-air cooling and exhaust gas recirculation systems.

(b) Measure temperature, humidity, and atmospheric pressure near the entrance to the engine's air filter, or at the inlet to the air intake system for engines that have no air filter. You may use a shared atmospheric pressure meter as long as your equipment for handling intake air maintains ambient pressure where you test the engine within ±1 kPa of the shared atmospheric pressure. You may use a shared humidity measurement for intake air as long as your equipment for handling intake air maintains dewpoint where you test the engine to within +0.5 °C of the shared humidity measurement.

(c) Use an air-intake restriction that represents production engines. Make sure the intake-air restriction is between the manufacturer's specified maximum for a clean filter and the manufacturer's specified maximum allowed. Measure the static differential pressure of the restriction at the location and at the speed and torque set points specified by the manufacturer. If the manufacturer does not specify a location, measure this pressure upstream any turbocharger or exhaust gas recirculation system connection to the intake air system. If the manufacturer does not specify speed and torque points, measure this pressure while the engine outputs maximum power. As the manufacturer, you are liable for emission compliance for all values up to the maximum restriction you specify for a particular engine.

(d) This paragraph (d) includes provisions for simulating charge-air cooling in the laboratory. This approach is described in paragraph (d)(1) of this section. Limits on using this approach are described in paragraphs (d)(2) and (3) of this section.

(1) Use a charge-air cooling system with a total intake-air capacity that represents production engines' in-use installation. Maintain coolant conditions as follows:

(i) Maintain a coolant temperature of at least 20 °C at the inlet to the charge-air cooler throughout testing.

(ii) At maximum engine power, set the coolant flow rate to achieve an air temperature within ±5 °C of the value specified by the manufacturer at the charge-air cooler outlet. Measure the air-outlet temperature at the location specified by the manufacturer. Use this coolant flow rate set point throughout testing.

(2) Using a constant flow rate as described in paragraph (d)(1)(ii) of this section may result in unrepresentative overcooling of the intake air. If this causes any regulated emission to decrease, then you may still use this approach, but only if the effect on emissions is smaller than the degree to which you meet the applicable emission standards. If the effect on emissions is larger than the degree to which you meet the applicable emission standards, you must use a variable flow rate that controls intake-air temperatures to be representative of in-use operation.

(3) This approach does not apply for field testing. You may not correct measured emission levels from field testing to account for any differences caused by the simulated cooling in the laboratory.

§ 1065.127 Exhaust gas recirculation.

Use the exhaust gas recirculation (EGR) system installed with the engine or one that represents a typical in-use configuration. This includes any applicable EGR cooling devices.

§ 1065.130 Engine exhaust.

(a) *General.* Use the exhaust system installed with the engine or one that represents a typical in-use configuration. This includes any applicable aftertreatment devices.

(b) *Aftertreatment configuration.* If you do not use the exhaust system installed with the engine, configure any aftertreatment devices as follows:

(1) Position any aftertreatment device so its distance from the nearest exhaust manifold flange or turbocharger outlet is within the range specified by the engine manufacturer in the application for certification. If this distance is not specified, position aftertreatment devices to represent typical in-use vehicle configurations.

(2) You may use laboratory exhaust tubing upstream of any aftertreatment device that is of diameter(s) typical of in-use configurations. If you use laboratory exhaust tubing upstream of any aftertreatment device, position each aftertreatment device according to paragraph (b)(1) of this section.

(c) *Sampling system connections.* Connect an engine's exhaust system to any raw sampling location or dilution stage, as follows:

(1) Minimize laboratory exhaust tubing lengths and use a total length of laboratory tubing of no more than 10 m or 50 outside diameters, whichever is greater. If laboratory exhaust tubing consists of several different outside tubing diameters, count the number of

diameters of length of each individual diameter, then sum all the diameters to determine the total length of exhaust tubing in diameters. Use the mean outside diameter of any converging or diverging sections of tubing. Use outside hydraulic diameters of any noncircular sections.

(2) You may install short sections of flexible laboratory exhaust tubing at any location in the engine or laboratory exhaust systems. You may use up to a combined total of 2 m or 10 outside diameters of flexible exhaust tubing.

(3) Insulate any laboratory exhaust tubing downstream of the first 25 outside diameters of length.

(4) Use laboratory exhaust tubing materials that are smooth-walled, electrically conductive, and not reactive with exhaust constituents. Stainless steel is an acceptable material.

(5) We recommend that you use laboratory exhaust tubing that has either a wall thickness of less than 2 mm or is air gap-insulated to minimize temperature differences between the wall and the exhaust.

(d) *In-line instruments.* You may insert instruments into the laboratory exhaust tubing, such as an in-line smoke meter. If you do this, you may leave a length of up to 5 outside diameters of laboratory exhaust tubing uninsulated on each side of each instrument, but you must leave a length of no more than 25 outside diameters of laboratory exhaust tubing uninsulated in total, including any lengths adjacent to in-line instruments.

(e) *Grounding.* Electrically ground the entire exhaust system.

(f) *Forced cooldown.* You may install a forced cooldown system for an exhaust aftertreatment device according to § 1065.530(a)(1)(i).

(g) *Exhaust restriction.* Use an exhaust restriction that represents the performance of production engines. Make sure the exhaust restriction set point is either (80 to 100) % of the maximum exhaust restriction specified by the manufacturer; or if the maximum is 5 kPa or less, make sure the set point is no less than 1.0 kPa from the maximum. For example, if the maximum back pressure is 4.5 kPa, do not use an exhaust restriction set point that is less than 3.5 kPa. Measure and set this pressure at the location and at the speed, torque and aftertreatment set points specified by the manufacturer. As the manufacturer, you are liable for emission compliance for all values up to the maximum restriction you specify for a particular engine.

(h) *Open crankcase emissions.* If the standard-setting part requires measuring open crankcase emissions, you may either measure open crankcase emissions separately using a method that we approve in advance, or route open crankcase emissions directly into the exhaust system for emission measurement as follows:

(1) Use laboratory tubing materials that are smooth-walled, electrically conductive, and not reactive with crankcase emissions. Stainless steel is an acceptable material.

Minimize tube lengths. We also recommend using heated or thin-walled or air gap-insulated tubing to minimize temperature differences between the wall and the crankcase emission constituents.

(2) Minimize the number of bends in the laboratory crankcase tubing and maximize the radius of any unavoidable bend.

(3) Use laboratory crankcase exhaust tubing that meets the engine manufacturer's specifications for crankcase back pressure.

(4) Connect the crankcase exhaust tubing into the raw exhaust downstream of any aftertreatment system, downstream of any installed exhaust restriction, and sufficiently upstream of any sample probes to ensure complete mixing with the engine's exhaust before sampling. Extend the crankcase exhaust tube into the free stream of exhaust to avoid boundary-layer effects and to promote mixing. You may orient the crankcase exhaust tube's outlet in any direction relative to the raw exhaust flow.

§ 1065.140 Dilution for gaseous and PM constituents.

(a) *General.* You may dilute exhaust with ambient air, synthetic air, or nitrogen that is at least 15 °C. Note that the composition of the diluent affects some gaseous emission measurement instruments' response to emissions. We recommend diluting exhaust at a location as close as possible to the location where ambient air dilution would occur in use.

(b) *Dilution-air conditions and background concentrations.* Before a diluent is mixed with exhaust, you may precondition it by increasing or decreasing its temperature or humidity. You may also remove constituents to reduce their background concentrations.The following provisions apply to removing constituents or accounting for background concentrations:

(1) You may measure constituent concentrations in the diluent and compensate for background effects on test results. See § 1065.650 for calculations that compensate for background concentrations.

(2) Either measure these background concentrations the same way you measure diluted exhaust constituents, or measure them in a way that does not affect your ability to demonstrate compliance with the applicable standards. For example, you may use the following simplifications for background sampling:

(i) You may disregard any proportional sampling requirements.

(ii) You may use unheated gaseous sampling systems.

(iii) You may use unheated PM sampling systems only if we approve it in advance.

(iv) You may use continuous sampling if you use batch sampling for diluted emissions.

(v) You may use batch sampling if you use continuous sampling for diluted emissions.

(3) For removing background PM, we recommend that you filter all dilution air, including primary full-flow dilution air, with high-efficiency particulate air (HEPA) filters that have an initial minimum collection efficiency specification of 99.97% (see § 1065.1001 for procedures related to HEPA-filtration efficiencies). Ensure that HEPA filters are installed properly so that background PM does not leak past the HEPA filters. If you choose to correct for background PM without using HEPA filtration, demonstrate that the background PM in the dilution air contributes less than 50% to the net PM collected on the sample filter.

(c) *Full-flow dilution; constant-volume sampling (CVS).* You may dilute the full flow of raw exhaust in a dilution tunnel that maintains a nominally constant volume flow rate, molar flow rate or mass flow rate of diluted exhaust, as follows:

(1) *Construction.* Use a tunnel with inside surfaces of 300 series stainless steel. Electrically ground the entire dilution tunnel. We recommend a thin-walled and insulated dilution tunnel to minimize temperature differences between the wall and the exhaust gases.

(2) *Pressure control.* Maintain static pressure at the location where raw exhaust is introduced into the tunnel within 1.2 kPa of atmospheric pressure. You may use a booster blower to control this pressure. If you test an engine using more careful pressure control and you show by engineering analysis or by test data that you require this level of control to demonstrate compliance at the applicable standards, we will maintain the same level of static pressure control when we test that engine.

(3) *Mixing.* Introduce raw exhaust into the tunnel by directing it downstream

along the centerline of the tunnel. You may introduce a fraction of dilution air radially from the tunnel's inner surface to minimize exhaust interaction with the tunnel walls. You may configure the system with turbulence generators such as orifice plates or fins to achieve good mixing. We recommend a minimum Reynolds number, $Re^{\#}$, of 4000 for the diluted exhaust stream, where $Re^{\#}$ is based on the inside diameter of the dilution tunnel. $Re^{\#}$ is defined in § 1065.640.

(4) *Flow measurement preconditioning.* You may condition the diluted exhaust before measuring its flow rate, as long as this conditioning takes place downstream of any sample probes, as follows:

(i) You may use flow straighteners, pulsation dampeners, or both of these.

(ii) You may use a filter.

(iii) You may use a heat exchanger to control the temperature upstream of any flow meter. Note paragraph (c)(6) of this section regarding aqueous condensation.

(5) *Flow measurement.* Section 1065.240 describes measurement instruments for diluted exhaust flow.

(6) *Aqueous condensation.* You may either prevent aqueous condensation throughout the dilution tunnel or you may measure humidity at the flow meter inlet. Calculations in § 1065.645 and § 1065.650 account for either method of addressing humidity in the diluted exhaust. Note that preventing aqueous condensation involves more than keeping pure water in a vapor phase (see § 1065.1001).

(7) *Flow compensation.* Maintain nominally constant molar, volumetric or mass flow of diluted exhaust. You may maintain nominally constant flow by either maintaining the temperature and pressure at the flow meter or by directly controlling the flow of diluted exhaust. You may also directly control the flow of proportional samplers to maintain proportional sampling. For an individual test, validate proportional sampling as described in § 1065.545.

(d) *Partial-flow dilution (PFD).* Except as specified in this paragraph (d), you may dilute a partial flow of raw or previously diluted exhaust before measuring emissions. § 1065.240 describes PFD-related flow measurement instruments. PFD may consist of constant or varying dilution ratios as described in paragraphs (d)(2) and (3) of this section. An example of a constant dilution ratio PFD is a ''secondary dilution PM'' measurement system. An example of a varying dilution ratio PFD is a ''bag mini-diluter'' or BMD.

(1) *Applicability.* (i) You may not use PFD if the standard-setting part prohibits it.

(ii) You may use PFD to extract a proportional raw exhaust sample for any batch or continuous PM emission sampling over any transient duty cycle only if we have explicitly approved it according to § 1065.10 as an alternative procedure to the specified procedure for full-flow CVS.

(iii) You may use PFD to extract a proportional raw exhaust sample for any batch or continuous gaseous emission sampling.

(iv) You may use PFD to extract a proportional raw exhaust sample for any batch or continuous PM emission sampling over any steady-state duty cycle or its ramped-modal cycle (RMC) equivalent.

(v) You may use PFD to extract a proportional raw exhaust sample for any batch or continuous field-testing.

(vi) You may use PFD to extract a proportional diluted exhaust sample from a CVS for any batch or continuous emission sampling.

(vii) You may use PFD to extract a constant raw or diluted exhaust sample for any continuous emission sampling.

(2) *Constant dilution-ratio PFD.* Do one of the following for constant dilution-ratio PFD:

(i) Dilute an already proportional flow. For example, you may do this as a way of performing secondary dilution from a CVS tunnel to achieve temperature control for PM sampling.

(ii) Continuously measure constituent concentrations. For example, you might dilute to precondition a sample of raw exhaust to control its temperature, humidity, or constituent concentrations upstream of continuous analyzers. In this case, you must take into account the dilution ratio before multiplying the continuous concentration by the sampled exhaust flow rate.

(iii) Extract a proportional sample from the constant dilution ratio PFD system. For example, you might use a variable-flow pump to proportionally fill a gaseous storage medium such as a bag from a PFD system. In this case, the proportional sampling must meet the same specifications as varying dilution ratio PFD in paragraph (d)(3) of this section.

(3) *Varying dilution-ratio PFD.* All the following provisions apply for varying dilution-ratio PFD:

(i) Use a control system with sensors and actuators that can maintain proportional sampling over intervals as short as 200 ms (*i.e.*, 5 Hz control).

(ii) For control input, you may use any sensor output from one or more measurements; for example, intake-air flow, fuel flow, exhaust flow, engine speed, and intake manifold temperature and pressure.

(iii) Account for any emission transit time in the PFD system.

(iv) You may use preprogrammed data if they have been determined for the specific test site, duty cycle, and test engine from which you dilute emissions.

(v) We recommend that you run practice cycles to meet the validation criteria in § 1065.545. Note that you must validate every emission test by meeting the validation criteria with the data from that specific test, not from practice cycles or other tests.

(vi) You may not use a PFD system that requires preparatory tuning or calibration with a CVS or with the emission results from a CVS. Rather, you must be able to independently calibrate the PFD.

(e) *Dilution and temperature control of PM samples.* Dilute PM samples at least once upstream of transfer lines. You may dilute PM samples upstream of a transfer line using full-flow dilution, or partial-flow dilution immediately downstream of a PM probe. Control sample temperature to a (47 ±5) °C tolerance, as measured anywhere within 20 cm upstream or downstream of the PM storage media (such as a filter). Measure this temperature with a bare-wire junction thermocouple with wires that are (0.500 ± 0.025) mm diameter, or with another suitable instrument that has equivalent performance. Heat or cool the PM sample primarily by dilution.

§ 1065.145 Gaseous and PM probes, transfer lines, and sampling system components.

(a) *Continuous and batch sampling.* Determine the total mass of each constituent with continuous or batch sampling, as described in § 1065.15(c)(2). Both types of sampling systems have probes, transfer lines, and other sampling system components that are described in this section.

(b) *Gaseous and PM sample probes.* A probe is the first fitting in a sampling system. It protrudes into a raw or diluted exhaust stream to extract a sample, such that its inside and outside surfaces are in contact with the exhaust. A sample is transported out of a probe into a transfer line, as described in paragraph (c) of this section. The following provisions apply to probes:

(1) *Probe design and construction.* Use sample probes with inside surfaces of 300 series stainless steel or, for raw exhaust sampling, use a nonreactive material capable of withstanding raw exhaust temperatures. Locate sample

probes where constituents are mixed to their mean sample concentration. Take into account the mixing of any crankcase emissions that may be routed into the raw exhaust. Locate each probe to minimize interference with the flow to other probes. We recommend that all probes remain free from influences of boundary layers, wakes, and eddies—especially near the outlet of a raw-exhaust tailpipe where unintended dilution might occur. Make sure that purging or back-flushing of a probe does not influence another probe during testing. You may use a single probe to extract a sample of more than one constituent as long as the probe meets all the specifications for each constituent.

(2) *Gaseous sample probes.* Use either single-port or multi-port probes for sampling gaseous emissions. You may orient these probes in any direction relative to the raw or diluted exhaust flow. For some probes, you must control sample temperatures, as follows:

(i) For probes that extract NO_X from diluted exhaust, control the probe's wall temperature to prevent aqueous condensation.

(ii) For probes that extract hydrocarbons for NMHC or NMHCE analysis from the diluted exhaust of compression-ignition engines, 2-stroke spark-ignition engines, or 4-stroke spark-ignition engines below 19 kW, maintain a probe wall temperature tolerance of (191 ± 11) °C.

(3) *PM sample probes.* Use PM probes with a single opening at the end. Orient PM probes to face directly upstream. If you shield a PM probe's opening with a PM pre-classifier such as a hat, you may not use the preclassifier we specify in paragraph (d)(4)(i) of this section. We recommend sizing the inside diameter of PM probes to approximate isokinetic sampling at the expected mean flow rate.

(c) *Transfer lines.* You may use transfer lines to transport an extracted sample from a probe to an analyzer, storage medium, or dilution system. Minimize the length of all transfer lines by locating analyzers, storage media, and dilution systems as close to probes as practical. We recommend that you minimize the number of bends in transfer lines and that you maximize the radius of any unavoidable bend. Avoid using 90° elbows, tees, and cross-fittings in transfer lines. Where such connections and fittings are necessary, take steps, using good engineering judgment, to ensure that you meet the temperature tolerances in this paragraph (c). This may involve measuring temperature at various locations within transfer lines and fittings. You may use a single transfer line to transport a sample of more than one constituent, as long as the transfer line meets all the specifications for each constituent. The following construction and temperature tolerances apply to transfer lines:

(1) *Gaseous samples.* Use transfer lines with inside surfaces of 300 series stainless steel, PTFE, Viton™, or any other material that you demonstrate has better properties for emission sampling. For raw exhaust sampling, use a non-reactive material capable of withstanding raw exhaust temperatures. You may use in-line filters if they do not react with exhaust constituents and if the filter and its housing meet the same temperature requirements as the transfer lines, as follows:

(i) For NO_X transfer lines upstream of either an NO_2-to-NO converter that meets the specifications of § 1065.378 or a chiller that meets the specifications of § 1065.376, maintain a sample temperature that prevents aqueous condensation.

(ii) For THC transfer lines for testing compression-ignition engines, 2-stroke spark-ignition engines, or 4-stroke spark-ignition engines below 19 kW, maintain a wall temperature tolerance throughout the entire line of (191 ±11) °C. If you sample from raw exhaust, you may connect an unheated, insulated transfer line directly to a probe. Design the length and insulation of the transfer line to cool the highest expected raw exhaust temperature to no lower than 191 °C, as measured at the transfer line's outlet.

(2) *PM samples.* We recommend heated transfer lines or a heated enclosure to minimize temperature differences between transfer lines and exhaust constituents. Use transfer lines that are inert with respect to PM and are electrically conductive on the inside surfaces. We recommend using PM transfer lines made of 300 series stainless steel. Electrically ground the inside surface of PM transfer lines.

(d) *Optional sample-conditioning components for gaseous sampling.* You may use the following sample-conditioning components to prepare gaseous samples for analysis, as long you do not install or use them in a way that adversely affects your ability to show that your engines comply with all applicable gaseous emission standards.

(1) *NO_2-to-NO converter.* You may use an NO_2-to-NO converter that meets the efficiency-performance check specified in § 1065.378 at any point upstream of a NO_X analyzer, sample bag, or other storage medium.

(2) *Sample dryer.* You may use either type of sample dryer described in this paragraph (d)(2) to decrease the effects of water on gaseous emission measurements. You may not use a chemical dryer, or used dryers upstream of PM sample filters.

(i) *Osmotic-membrane.* You may use an osmotic-membrane dryer upstream of any gaseous analyzer or storage medium, as long as it meets the temperature specifications in paragraph (c)(1) of this section. Because osmotic-membrane dryers may deteriorate after prolonged exposure to certain exhaust constituents, consult with the membrane manufacturer regarding your application before incorporating an osmotic-membrane dryer. Monitor the dewpoint, T_{dew}, and absolute pressure, p_{total}, downstream of an osmotic-membrane dryer. You may use continuously recorded values of T_{dew} and p_{total} in the amount of water calculations specified in § 1065.645. If you do not continuously record these values, you may use their peak values observed during a test or their alarm setpoints as constant values in the calculations specified in § 1065.645. You may also use a nominal p_{total}, which you may estimate as the dryer's lowest absolute pressure expected during testing.

(ii) *Thermal chiller.* You may use a thermal chiller upstream of some gas analyzers and storage media. You may not use a thermal chiller upstream of a THC measurement system for compression-ignition engines, 2-stroke spark-ignition engines, or 4-stroke spark-ignition engines below 19 kW. If you use a thermal chiller upstream of an NO_2-to-NO converter or in a sampling system without an NO_2-to-NO converter, the chiller must meet the NO_2 loss-performance check specified in § 1065.376. Monitor the dewpoint, T_{dew}, and absolute pressure, p_{total}, downstream of a thermal chiller. You may use continuously recorded values of T_{dew} and p_{total} in the emission calculations specified in § 1065.650. If you do not continuously record these values, you may use their peak values observed during a test or their high alarm setpoints as constant values in the amount of water calculations specified in § 1065.645. You may also use a nominal p_{total}, which you may estimate as the dryer's lowest absolute pressure expected during testing. If it is valid to assume the degree of saturation in the thermal chiller, you may calculate T_{dew} based on the known chiller efficiency and continuous monitoring of chiller temperature, $T_{chiller}$. If you do not continuously record values of $T_{chiller}$, you may use its peak value observed during a test, or its alarm setpoint, as a constant value to determine a constant amount of water according to

§ 1065.645. If it is valid to assume that $T_{chiller}$ is equal to T_{dew}, you may use $T_{chiller}$ in lieu of T_{dew} according to § 1065.645. If we ask for it, you must show by engineering analysis or by data the validity of any assumptions allowed by this paragraph (d)(2)(ii).

(3) *Sample pumps.* You may use sample pumps upstream of an analyzer or storage medium for any gas. Use sample pumps with inside surfaces of 300 series stainless steel, PTFE, or any other material that you demonstrate has better properties for emission sampling. For some sample pumps, you must control temperatures, as follows:

(i) If you use a NO_X sample pump upstream of either an NO_2-to-NO converter that meets § 1065.378 or a chiller that meets § 1065.376, it must be heated to prevent aqueous condensation.

(ii) For testing compression-ignition engines, 2-stroke spark-ignition engines, or 4-stroke compression ignition engines below 19 kW, if you use a THC sample pump upstream of a THC analyzer or storage medium, its inner surfaces must be heated to a tolerance of (191 ±11) °C.

(e) *Optional sample-conditioning components for PM sampling.* You may use the following sample-conditioning components to prepare PM samples for analysis, as long you do not install or use them in a way that adversely affects your ability to show that your engines comply with the applicable PM emission standards. You may condition PM samples to minimize positive and negative biases to PM results, as follows:

(1) *PM preclassifier.* You may use a PM preclassifier to remove large-diameter particles. The PM preclassifier may be either an inertial impactor or a cyclonic separator. It must be constructed of 300 series stainless steel. The preclassifier must be rated to remove at least 50% of PM at an aerodynamic diameter of 10 μm and no more than 1% of PM at an aerodynamic diameter of 1 μm over the range of flow rates for which you use it. Follow the preclassifier manufacturer's instructions for any periodic servicing that may be necessary to prevent a buildup of PM. Install the preclassifier in the dilution system downstream of the last dilution stage. Configure the preclassifier outlet with a means of bypassing any PM sample media so the preclassifier flow may be stabilized before starting a test. Locate PM sample media within 50 cm downstream of the preclassifier's exit. You may not use this preclassifier if you use a PM probe that already has a preclassifier. For example, if you use a hat-shaped preclassifier that is located immediately upstream of the probe in such a way that it forces the sample flow to change direction before entering the probe, you may not use any other preclassifier in your PM sampling system.

(2) *Other components.* You may request to use other PM conditioning components upstream of a PM preclassifier, such as components that condition humidity or remove gaseous-phase hydrocarbons from the diluted exhaust stream. You may use such components only if we approve them under § 1065.10.

§ 1065.150 Continuous sampling.

You may use continuous sampling techniques for measurements that involve raw or dilute sampling. Make sure continuous sampling systems meet the specifications in § 1065.145. Make sure continuous analyzers meet the specifications in subparts C and D of this part.

§ 1065.170 Batch sampling for gaseous and PM constituents.

Batch sampling involves collecting and storing emissions for later analysis. Examples of batch sampling include collecting and storing gaseous emissions in a bag and collecting and storing PM on a filter. You may use batch sampling to store emissions that have been diluted at least once in some way, such as with CVS, PFD, or BMD. You may use batch-sampling to store undiluted emissions only if we approve it as an alternate procedure under § 1065.10.

(a) *Sampling methods.* For batch sampling, extract the sample at a rate proportional to the exhaust flow. If you extract from a constant-volume flow rate, sample at a constant-volume flow rate. If you extract from a varying flow rate, vary the sample rate in proportion to the varying flow rate. Validate proportional sampling after an emission test as described in § 1065.545. Use storage media that do not change measured emission levels (either up or down). For example, do not use sample bags for storing emissions if the bags are permeable with respect to emissions or if they off-gas emissions. As another example, do not use PM filters that irreversibly absorb or adsorb gases.

(b) *Gaseous sample storage media.* Store gas volumes in sufficiently clean containers that minimally off-gas or allow permeation of gases. Use good engineering judgment to determine acceptable thresholds of storage media cleanliness and permeation. To clean a container, you may repeatedly purge and evacuate a container and you may heat it. Use a flexible container (such as a bag) within a temperature-controlled environment, or use a temperature controlled rigid container that is initially evacuated or has a volume that can be displaced, such as a piston and cylinder arrangement. Use containers meeting the specifications in the following table, noting that you may request to use other container materials under § 1065.10:

TABLE 1 OF § 1065.170.—GASEOUS BATCH SAMPLING CONTAINER MATERIALS

Emissions	Engines	
	Compression-ignition, two-stroke spark ignition, 4-stroke spark-ignition <19 kW	All other engines
CO, CO_2, O_2, CH_4, C_2H_6, C_3H_8, NO, NO_2 [1].	Tedlar$_{TM}$,[2] Kynar$_{TM}$,[2] Teflon$_{TM}$,[3] or 300 series stainless steel [3]	Tedlar$_{TM}$,[2] Kynar$_{TM}$,[2] Teflon$_{TM}$,[3] or 300 series stainless steel[3]
THC, NMHC	Teflon™ [4] or 300 series stainless steel [4]	Tedlar$_{TM}$,[2] Kynar$_{TM}$,[2] Teflon$_{TM}$,[3] or 300 series stainless steel [3]

[1] As long as you prevent aqueous condensation in storage container.
[2] Up to 40 °C.
[3] Up to 202 °C.
[4] At (191 ±11) °C.

(c) *PM sample media.* Apply the following methods for sampling particulate emissions:

(1) If you use filter-based sampling media to extract and store PM for measurement, your procedure must meet the following specifications:

(i) If you expect that a filter's total surface concentration of PM will exceed

0.473 mm/mm² for a given test interval, you may use filter media with a minimum initial collection efficiency of 98%; otherwise you must use a filter media with a minimum initial collection efficiency of 99.7%. Collection efficiency must be measured as described in ASTM D 2986–95a (incorporated by reference in § 1065.1010), though you may rely on the sample-media manufacturer's measurements reflected in their product ratings to show that you meet applicable requirements.

(ii) The filter must be circular, with an overall diameter of46.50± 0.6 mm and an exposed diameter of at least 38 mm. See the cassette specifications in paragraph (c)(1)(vi) of this section.

(iii) We highly recommend that you use a pure PTFE filter material that does not have any flow-through support bonded to the back and has an overall thickness of 40± 20 μm. An inert polymer ring may be bonded to the periphery of the filter material for support and for sealing between the filter cassette parts. We consider Polymethylpentene (PMP) and PTFE inert materials for a support ring, but other inert materials may be used. See the cassette specifications in paragraph (c)(1)(v) of this section. We allow the use of PTFE-coated glass fiber filter material, as long as this filter media selection does not affect your ability to demonstrate compliance with the applicable standards, which we base on a pure PTFE filter material. Note that we will use pure PTFE filter material for compliance testing, and we may require you to use pure PTFE filter material for any compliance testing we require, such as for selective enforcement audits.

(iv) You may request to use other filter materials or sizes under the provisions of § 1065.10.

(v) To minimize turbulent deposition and to deposit PM evenly on a filter, use a 12.5° (from center) divergent cone angle to transition from the transfer-line inside diameter to the exposed diameter of the filter face. Use 300 series stainless steel for this transition.

(vi) Maintain sample velocity at the filter face at or below 100 cm/s, where filter face velocity is the measured volumetric flow rate of the sample at the pressure and temperature upstream of the filter face, divided by the filter's exposed area.

(vii) Use a clean cassette designed to the specifications of Figure 1 of § 1065.170 and made of any of the following materials: Delrin™, 300 series stainless steel, polycarbonate, acrylonitrile-butadiene-styrene (ABS) resin, or conductive polypropylene. We recommend that you keep filter cassettes clean by periodically washing or wiping them with a compatible solvent applied using a lint-free cloth. Depending upon your cassette material, ethanol (C_2H_5OH) might be an acceptable solvent. Your cleaning frequency will depend on your engine's PM and HC emissions.

(viii) If you store filters in cassettes in an automatic PM sampler, cover or seal individual filter cassettes after sampling to prevent communication of semi-volatile matter from one filter to another.

(2) You may use other PM sample media that we approve under § 1065.10, including non-filtering techniques. For example, you might deposit PM on an inert substrate that collects PM using electrostatic, thermophoresis, inertia, diffusion, or some other deposition mechanism, as approved.

BILLING CODE 6560–50–P

Figure 1 of §1065.170—PM filter cassette specifications.

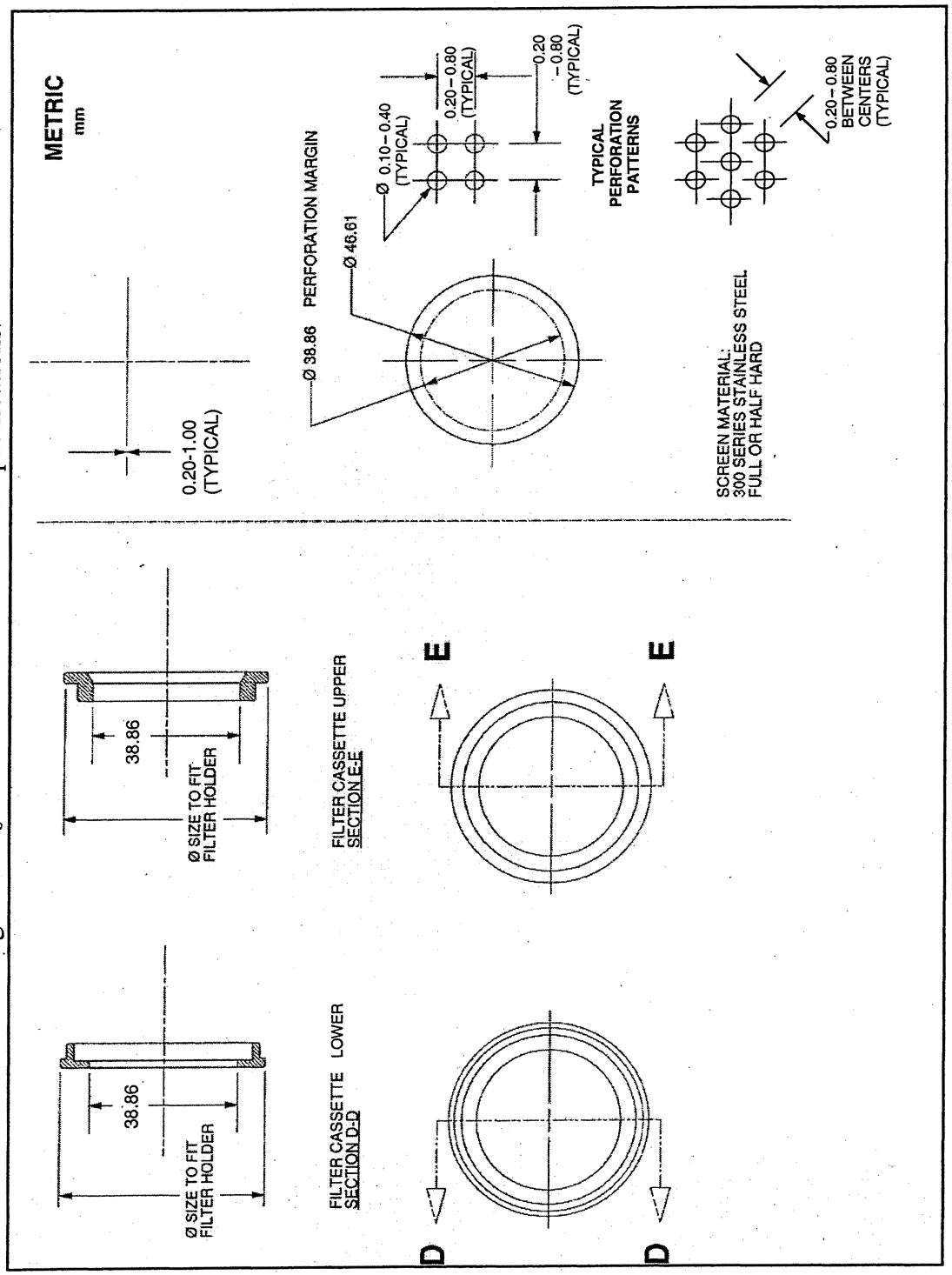

BILLING CODE 6560–50–C

§ 1065.190 PM-stabilization and weighing environments for gravimetric analysis.

(a) This section describes the two environments required to stabilize and weigh PM for gravimetric analysis: the PM stabilization environment, where filters are stored before weighing; and the weighing environment, where the balance is located. The two environments may share a common space. These volumes may be one or more rooms, or they may be much smaller, such as a glove box or an automated weighing system consisting of one or more countertop-sized environments.

(b) We recommend that you keep both the stabilization and the weighing environments free of ambient contaminants, such as dust, aerosols, or semi-volatile material that could contaminate PM samples. We recommend that these environments conform with an ''as-built'' Class Six clean room specification according to ISO 14644–1 (incorporated by reference in § 1065.1010); however, we also recommend that you deviate from ISO 14644–1 as necessary to minimize air motion that might affect weighing. We recommend maximum air-supply and

air-return velocities of 0.05 m/s in the weighing environment.

(c) Verify the cleanliness of the PM-stabilization environment using reference filters, as described in § 1065.390(b).

(d) Maintain the following ambient conditions within the two environments during all stabilization and weighing:

(1) *Ambient temperature and tolerances.* Maintain the weighing environment at a tolerance of (22 ±1) °C. If the two environments share a common space, maintain both environments at a tolerance of (22 ±1) °C. If they are separate, maintain the stabilization environment at a tolerance of (22 ±3) °C.

(2) *Dewpoint.* Maintain a dewpoint of 9.5 °C in both environments. This dewpoint will control the amount of water associated with sulfuric acid (H_2SO_4) PM, such that 1.1368 grams of water will be associated with each gram of H_2SO_4.

(3) *Dewpoint tolerances.* If the expected fraction of sulfuric acid in PM is unknown, we recommend controlling dewpoint at within ±1 °C tolerance. This would limit any dewpoint-related change in PM to less than ±2%, even for PM that is 50% sulfuric acid. If you know your expected fraction of sulfuric acid in PM, we recommend that you select an appropriate dewpoint tolerance for showing compliance with emission standards using the following table as a guide:

TABLE 1 OF § 1065.190.—DEWPOINT TOLERANCE AS A FUNCTION OF % PM CHANGE AND % SULFURIC ACID PM

Expected sulfuric acid fraction of PM (percent)	±0.5% PM mass change	±1.0% PM mass change	±2.0% PM mass change
5	±3.0 °C	±6.0 °C	±12 °C
50	±0.30 °C	±0.60 °C	±1.2 °C
100	±0.15 °C	±0.30 °C	±0.60 °C

(e) Verify the following ambient conditions using measurement instruments that meet the specifications in subpart C of this part:

(1) Continuously measure dewpoint and ambient temperature. Use these values to determine if the stabilization and weighing environments have remained within the tolerances specified in paragraph (d) of this section for at least the past 60 min. We recommend that you provide an interlock that automatically prevents the balance from reporting values if either of the environments have not been within the applicable tolerances for the past 60 min.

(2) Continuously measure atmospheric pressure within the weighing environment. You may use a shared atmospheric pressure meter as long as you can show that your equipment for handling the weighing environment air maintains ambient pressure at the balance within ±100 Pa of the shared atmospheric pressure. Provide a means to record the most recent atmospheric pressure when you weigh each PM sample. Use this value to calculate the PM buoyancy correction in § 1065.690.

(f) We recommend that you install a balance as follows:

(1) Install the balance on a vibration-isolation platform to isolate it from external noise and vibration.

(2) Shield the balance from convective airflow with a static-dissipating draft shield that is electrically grounded.

(3) Follow the balance manufacturer's specifications for all preventive maintenance.

(4) Operate the balance manually or as part of an automated weighing system.

(g) Minimize static electric charge in the balance environment, as follows:

(1) Electrically ground the balance.

(2) Use 300 series stainless steel tweezers if PM samples must be handled manually.

(3) Ground tweezers with a grounding strap, or provide a grounding strap for the operator such that the grounding strap shares a common ground with the balance. Make sure grounding straps have an appropriate resistor to protect operators from accidental shock.

(4) Provide a static-electricity neutralizer that is electrically grounded in common with the balance to remove static charge from PM samples, as follows:

(i) You may use radioactive neutralizers such as a Polonium (^{210}Po) source. Replace radioactive sources at the intervals recommended by the neutralizer manufacturer.

(ii) You may use other neutralizers, such as corona-discharge ionizers. If you use a corona-discharge ionizer, we recommend that you monitor it for neutral net charge according to the ionizer manufacturer's recommendations.

(5) We recommend that you use a device to monitor the static charge of PM sample media surfaces.

(6) We recommend that you neutralize PM sample media to within ±2.0 V of neutral.

§ 1065.195 PM-stabilization environment for in-situ analyzers.

(a) This section describes the environment required to determine PM in-situ. For in-situ analyzers, such as an inertial balance, this is the environment within a PM sampling system that surrounds the PM sample media. This is typically a very small volume.

(b) Maintain the environment free of ambient contaminants, such as dust, aerosols, or semi-volatile material that could contaminate PM samples. Filter all air used for stabilization with HEPA filters. Ensure that HEPA filters are installed properly so that background PM does not leak past the HEPA filters.

(c) Maintain the following thermodynamic conditions within the environment before measuring PM:

(1) *Ambient temperature.* Select a nominal ambient temperature, T_{amb}, between (42 and 52) °C. Maintain the ambient temperature within ±1.0 °C of the selected nominal value.

(2) *Dewpoint.* Select a dewpoint, T_{dew}, that corresponds to T_{amb} such that $T_{dew} = (0.95T_{amb} - 11.40)$ °C. The resulting dewpoint will control the amount of water associated with sulfuric acid (H_2SO_4) PM, such that 1.1368 grams of water will be associated with each gram of H_2SO_4. For example, if you select a nominal ambient temperature of 47 °C, set a dewpoint of 33.3 °C.

(3) *Dewpoint tolerance.* If the expected fraction of sulfuric acid in PM is unknown, we recommend controlling dewpoint within ± 1.0 °C. This would limit any dewpoint-related change in PM to less than ± 2%, even for PM that is 50% sulfuric acid. If you know your expected fraction of sulfuric acid in PM, we recommend that you select an appropriate dewpoint tolerance for showing compliance with emission standards using Table 1 of § 1065.190 as a guide:

(4) *Absolute pressure.* Maintain an absolute pressure of (80.000 to 103.325) kPa. Use good engineering judgment to

maintain a more stringent tolerance of absolute pressure if your PM measurement instrument requires it.

(d) Continuously measure dewpoint, temperature, and pressure using measurement instruments that meet the PM-stabilization environment specifications in subpart C of this part. Use these values to determine if the in-situ stabilization environment is within the tolerances specified in paragraph (c) of this section. Do not use any PM quantities that are recorded when any of these parameters exceed the applicable tolerances.

(e) If you use an inertial PM balance, we recommend that you install it as follows:

(1) Isolate the balance from any external noise and vibration that is within a frequency range that could affect the balance.

(2) Follow the balance manufacturer's specifications.

(f) If static electricity affects an inertial balance, you may use a static neutralizer, as follows:

(1) You may use a radioactive neutralizer such as a Polonium (^{210}Po) source or a Krypton (^{85}Kr) source. Replace radioactive sources at the intervals recommended by the neutralizer manufacturer.

(2) You may use other neutralizers, such as a corona-discharge ionizer. If you use a corona-discharge ionizer, we recommend that you monitor it for neutral net charge according to the ionizer manufacturer's recommendations.

Subpart C—Measurement Instruments

§ 1065.201 Overview and general provisions.

(a) *Scope.* This subpart specifies measurement instruments and associated system requirements related to emission testing in a laboratory and in the field. This includes laboratory instruments and portable emission measurement systems (PEMS) for measuring engine parameters, ambient conditions, flow-related parameters, and emission concentrations.

(b) *Instrument types.* You may use any of the specified instruments as described in this subpart to perform emission tests. If you want to use one of these instruments in a way that is not specified in this subpart, or if you want to use a different instrument, you must first get us to approve your alternate procedure under § 1065.10. Where we specify more than one instrument for a particular measurement, we may identify which instrument serves as the reference for showing that an alternative procedure is equivalent to the specified procedure.

(c) *Measurement systems.* Assemble a system of measurement instruments that allows you to show that your engines comply with the applicable emission standards, using good engineering judgment. When selecting instruments, consider how conditions such as vibration, temperature, pressure, humidity, viscosity, specific heat, and exhaust composition (including trace concentrations) may affect instrument compatibility and performance.

(d) *Redundant systems.* For all measurement instruments described in this subpart, you may use data from multiple instruments to calculate test results for a single test. If you use redundant systems, use good engineering judgment to use multiple measured values in calculations or to disregard individual measurements. Note that you must keep your results from all measurements, as described in § 1065.25. This requirements applies whether or not you actually use the measurements in your calculations.

(e) *Range.* You may use an instrument's response above 100% of its operating range if this does not affect your ability to show that your engines comply with the applicable emission standards. Note that we require additional testing and reporting if an analyzer responds above 100% of its range. See § 1065.550. Auto-ranging analyzers do not require additional testing or reporting.

(f) *Related subparts for laboratory testing.* Subpart D of this part describes how to evaluate the performance of the measurement instruments in this subpart. In general, if an instrument is specified in a specific section of this subpart, its calibration and verifications are typically specified in a similarly numbered section in subpart D of this part. For example, § 1065.290 gives instrument specifications for PM balances and § 1065.390 describes the corresponding calibrations and verifications. Note that some instruments also have other requirements in other sections of subpart D of this part. Subpart B of this part identifies specifications for other types of equipment, and subpart H of this part specifies engine fluids and analytical gases.

(g) *Field testing and testing with PEMS.* Subpart J of this part describes how to use these and other measurement instruments for field testing and other PEMS testing.

§ 1065.202 Data updating, recording, and control.

Your test system must be able to update data, record data and control systems related to operator demand, the dynamometer, sampling equipment, and measurement instruments. Use data acquisition and control systems that can record at the specified minimum frequencies, as follows:

TABLE OF § 1065.202.—DATA RECORDING AND CONTROL MINIMUM FREQUENCIES

Applicable test protocol section	Measured values	Minimum command and control frequency	Minimum recording frequency
§ 1065.510	Speed and torque during an engine step-map	1 Hz	1 mean value per step.
§ 1065.510	Speed and torque during an engine sweep-map	5 Hz	1 Hz means.
§ 1065.514, § 1065.530	Transient duty cycle reference and feedback speeds and torques.	5 Hz	1 Hz means.
§ 1065.514, § 1065.530	Steady-state and ramped-modal duty cycle reference and feedback speeds and torques.	1 Hz	1 Hz.
§ 1065.520, § 1065.530, § 1065.550	Continuous concentrations of raw or dilute analyzers	N/A	1 Hz.
§ 1065.520, § 1065.530, § 1065.550	Batch concentrations of raw or dilute analyzers	N/A	1 mean value per test interval.
§ 1065.530, § 1065.545	Diluted exhaust flow rate from a CVS with a heat exchanger upstream of the flow measurement.	N/A	1 Hz.
§ 1065.530, § 1065.545	Diluted exhaust flow rate from a CVS without a heat exchanger upstream of the flow measurement.	5 Hz	1 Hz means.

TABLE OF § 1065.202.—DATA RECORDING AND CONTROL MINIMUM FREQUENCIES—Continued

Applicable test protocol section	Measured values	Minimum command and control frequency	Minimum recording frequency
§ 1065.530, § 1065.545	Intake-air or raw-exhaust flow rate	N/A	1 Hz means.
§ 1065.530, § 1065.545	Dilution air if actively controlled	5 Hz	1 Hz means.
§ 1065.530	Sample flow from a CVS that has a heat exchanger	1 Hz	1 Hz.
§ 1065.530, § 1065.545	Sample flow from a CVS does not have a heat exchanger.	5 Hz	1 Hz mean.

§ 1065.205 Performance specifications for measurement instruments.

Your test system as a whole must meet all the applicable calibrations, verifications, and test-validation criteria specified in subparts D and F of this part or subpart J of this part for using PEMS and for performing field testing. We recommend that your instruments meet the specifications in Table 1 of this section for all ranges you use for testing. We also recommend that you keep any documentation you receive from instrument manufacturers showing that your instruments meet the specifications in Table 1 of this section.

Table 1 of §1065.205–Recommended performance specifications for measurement instruments

Measurement Instrument	Measured quantity symbol	Complete System Rise time and Fall time	Recording update frequency	Accuracy[a]	Repeatability[a]	Noise[a]
Engine speed transducer	f_n	1 s	1 Hz means	2.0 % of pt. or 0.5 % of max.	1.0 % of pt. or 0.25 % of max.	0.05 % of max
Engine torque transducer	T	1 s	1 Hz means	2.0 % of pt. or 1.0 % of max.	1.0 % of pt. or 0.5 % of max	0.05 % of max.
Electrical work (active-power meter)	W	1 s	1 Hz means	2.0 % of pt. or 0.5 % of max.	1.0 % of pt. or 0.25 % of max.	0.05 % of max
General pressure transducer (not a part of another instrument)	p	5 s	1 Hz	2.0 % of pt. or 1.0 % of max.	1.0 % of pt. or 0.50 % of max.	0.1 % of max
Atmospheric pressure meter used for PM-stabilization and balance environments	p_{atmos}	50 s	5 times per hour	50 Pa	25 Pa	5 Pa
General purpose atmospheric pressure meter	p_{atmos}	50 s	5 times per hour	250 Pa	100Pa	50 Pa
Temperature sensor for PM-stabilization and balance environments	T	50 s	0.1 Hz	0.25 K	0.1 K	0.1 K
Other temperature sensor (not a part of another instrument)	T	10 s	0.5 Hz	0.4 % of pt. K or 0.2 % of max. K	0.2 % of pt. K or 0.1 % of max. K	0.1 % of max
Dewpoint sensor for PM-stabilization and balance environments	T_{dew}	50 s	0.1 Hz	0.25 K	0.1 K	0.02 K
Other dewpoint sensor	T_{dew}	50 s	0.1 Hz	1 K	0.5 K	0.1 K
Fuel flow meter (Fuel totalizer in parentheses)	$\dot{m}$	5 s (N/A)	1 Hz (N/A)	2.0 % of pt. or 1.5 % of max.	1.0 % of pt. or 0.75 % of max.	0.5 % of max.
Total diluted exhaust meter (CVS) (With heat exchanger before meter)	$\dot{n}$	1 s (5 s)	1 Hz means (1 Hz)	2.0 % of pt. or 1.5 % of max.	1.0 % of pt. or 0.75 % of max.	1.0 % of max.
Dilution air, inlet air, exhaust, and sample flow meters	$\dot{n}$	1 s	1 Hz means of 5 Hz samples	2.5 % of pt. or 1.5 % of max.	1.25 % of pt. or 0.75 % of max.	1.0 % of max.
Continuous gas analyzer	x	5 s	1 Hz	2.0 % of pt. or 2.0 % of meas.	1.0 % of pt. or 1.0 % of meas.	1.0 % of max.
Batch gas analyzer	x	N/A	N/A	2.0 % of pt. or 2.0 % of meas.	1.0 % of pt. or 1.0 % of meas.	1.0 % of max.
Gravimetric PM balance	m_{PM}	N/A	N/A	See §1065.790	0.5 µg	N/A
Inertial PM balance	m_{PM}	5 s	1 Hz	2.0 % of pt. or 2.0 % of meas.	1.0 % of pt. or 1.0 % of meas.	0.2 % of max.

[a] Accuracy, repeatability, and noise are all determined with the same collected data, as described in §1065.305, and based on absolute values. "pt." refers to the overall flow-weighted mean value expected at the standard; "max." refers to the peak value expected at the standard over any test interval, not the maximum of the instrument's range; "meas" refers to the actual flow-weighted mean measured over any test interval.

Measurement of Engine Parameters and Ambient Conditions

§ 1065.210 Work input and output sensors.

(a) *Application.* Use instruments as specified in this section to measure work inputs and outputs during engine operation. We recommend that you use sensors, transducers, and meters that meet the specifications in Table 1 of § 1065.205. Note that your overall systems for measuring work inputs and outputs must meet the linearity verifications in § 1065.307. We recommend that you measure work inputs and outputs where they cross the system boundary as shown in Figure 1 of this section. The system boundary is different for air-cooled engines than for liquid-cooled engines. If you choose to measure work before or after a work conversion, relative to the system boundary, use good engineering judgment to estimate any work-conversion losses in a way that avoids overestimation of total work. For example, if it is impractical to instrument the shaft of an exhaust turbine generating electrical work, you may decide to measure its converted electrical work. In this case, divide the electrical work by an accurate value of electrical generator efficiency ($\eta<1$), or

assume an efficiency of 1 (η=1), which would over-estimate brake-specific emissions. Do not underestimate the generator's efficiency because this would result in an under-estimation of brake-specific emissions. In all cases, ensure that you are able to accurately demonstrate compliance with the applicable standards.

BILLING CODE 6560–50–P

Figure 1 of §1065.210: Work inputs, outputs, and system boundaries for liquid-cooled and air-cooled engines.

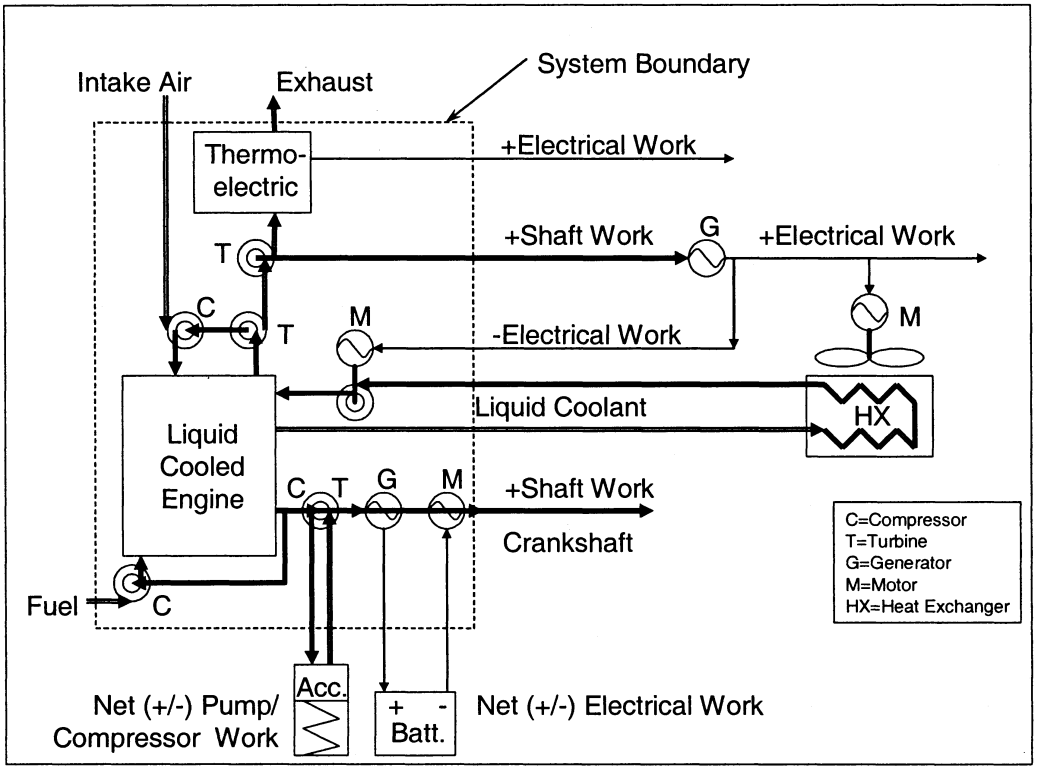

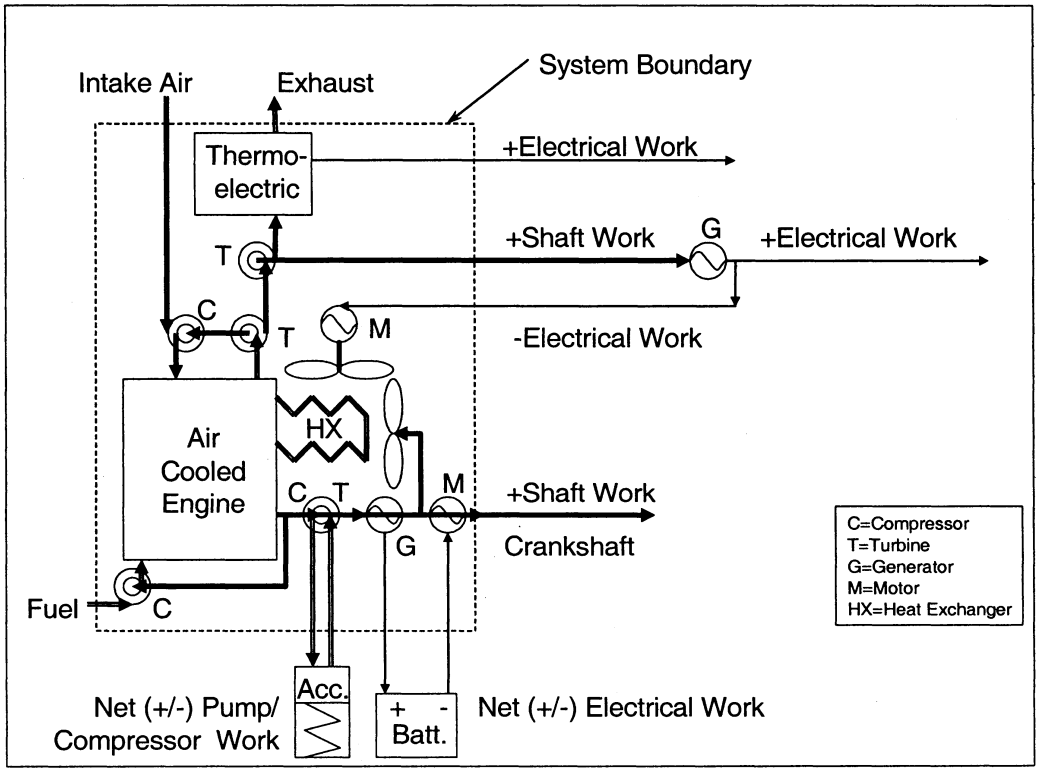

(b) *Shaft work.* Use speed and torque transducer outputs to calculate total work according to § 1065.650.

(1) *Speed.* Use a magnetic or optical shaft-position detector with a resolution of at least 60 counts per revolution, in combination with a frequency counter that rejects common-mode noise.

(2) *Torque.* You may use a variety of methods to determine engine torque. As needed, and based on good engineering judgment, compensate for torque induced by the inertia of accelerating and decelerating components connected to the flywheel, such as the drive shaft and dynamometer rotor. Use any of the following methods to determine engine torque:

(i) Measure torque by mounting a strain gage or similar instrument in-line between the engine and dynamometer.

(ii) Measure torque by mounting a strain gage or similar instrument on a lever arm connected to the dynamometer housing.

(iii) Calculate torque from internal dynamometer signals, such as armature current, as long as you calibrate this measurement as described in § 1065.310.

(c) *Electrical work.* Use a watt-hour meter output to calculate total work according to § 1065.650. Use a watt-hour meter that outputs active power (kW). Watt-hour meters typically combine a Wheatstone bridge voltmeter and a Hall-effect clamp-on ammeter into a single microprocessor-based instrument that analyzes and outputs several parameters, such as alternating or direct current voltage (V), current (A), power factor (pf), apparent power (VA), reactive power (VAR), and active power (W).

(d) *Pump, compressor or turbine work.* Use pressure transducer and flow-meter outputs to calculate total work according to § 1065.650. For flow meters, see § 1065.220 through § 1065.248.

§ 1065.215 Pressure transducers, temperature sensors, and dewpoint sensors.

(a) *Application.* Use instruments as specified in this section to measure pressure, temperature, and dewpoint.

(b) *Component requirements.* We recommend that you use pressure transducers, temperature sensors, and dewpoint sensors that meet the specifications in Table 1 of § 1065.205. Note that your overall systems for measuring pressure, temperature, and dewpoint must meet the calibration and verifications in § 1065.315.

(c) *Temperature.* For PM-balance environments or other precision temperature measurements over a narrow temperature range, we recommend thermistors. For other applications we recommend thermocouples that are not grounded to the thermocouple sheath. You may use other temperature sensors, such as resistive temperature detectors (RTDs).

(d) *Pressure.* Pressure transducers must be located in a temperature-controlled environment, or they must compensate for temperature changes over their expected operating range. Transducer materials must be compatible with the fluid being measured. For atmospheric pressure or other precision pressure measurements, we recommend either capacitance-type, quartz crystal, or laser-interferometer transducers. For other applications, we recommend either strain gage or capacitance-type pressure transducers. You may use other pressure-measurement instruments, such as manometers, where appropriate.

(e) *Dewpoint.* For PM-stabilization environments, we recommend chilled-surface hygrometers. For other applications, we recommend thin-film capacitance sensors. You may use other dewpoint sensors, such as a wet-bulb/dry-bulb psychrometer, where appropriate.

Flow-Related Measurements

§ 1065.220 Fuel flow meter.

(a) *Application.* You may use fuel flow in combination with a chemical balance of carbon (or oxygen) between the fuel, inlet air, and raw exhaust to calculate raw exhaust flow as described in § 1065.650, as follows:

(1) Use the actual value of calculated raw exhaust flow rate in the following cases:

(i) For multiplying raw exhaust flow rate with continuously sampled concentrations.

(ii) For multiplying total raw exhaust flow with batch-sampled concentrations.

(2) In the following cases, you may use a fuel flow meter signal that does not give the actual value of raw exhaust, as long as it is linearly proportional to the exhaust molar flow rate's actual calculated value:

(i) For feedback control of a proportional sampling system, such as a partial-flow dilution system.

(ii) For multiplying with continuously sampled gas concentrations, if the same signal is used in a chemical-balance calculation to determine work from brake-specific fuel consumption and fuel consumed.

(b) *Component requirements.* We recommend that you use a fuel flow meter that meets the specifications in Table 1 of § 1065.205. We recommend a fuel flow meter that measures mass directly, such as one that relies on gravimetric or inertial measurement principles. This may involve using a meter with one or more scales for weighing fuel or using a Coriolis meter. Note that your overall system for measuring fuel flow must meet the linearity verification in § 1065.307 and the calibration and verifications in § 1065.320.

(c) *Recirculating fuel.* In any fuel-flow measurement, account for any fuel that bypasses the engine or returns from the engine to the fuel storage tank.

(d) *Flow conditioning.* For any type of fuel flow meter, condition the flow as needed to prevent wakes, eddies, circulating flows, or flow pulsations from affecting the accuracy or repeatability of the meter. You may accomplish this by using a sufficient length of straight tubing (such as a length equal to at least 10 pipe diameters) or by using specially designed tubing bends, straightening fins, or pneumatic pulsation dampeners to establish a steady and predictable velocity profile upstream of the meter.

§ 1065.225 Intake-air flow meter.

(a) *Application.* You may use an intake-air flow meter in combination with a chemical balance of carbon (or oxygen) between the fuel, inlet air, and raw exhaust to calculate raw exhaust flow as described in § 1065.650, as follows:

(1) Use the actual value of calculated raw exhaust in the following cases:

(i) For multiplying raw exhaust flow rate with continuously sampled concentrations.

(ii) For multiplying total raw exhaust flow with batch-sampled concentrations.

(2) In the following cases, you may use an intake-air flow meter signal that does not give the actual value of raw exhaust, as long as it is linearly proportional to the exhaust flow rate's actual calculated value:

(i) For feedback control of a proportional sampling system, such as a partial-flow dilution system.

(ii) For multiplying with continuously sampled gas concentrations, if the same signal is used in a chemical-balance calculation to determine work from brake-specific fuel consumption and fuel consumed.

(b) *Component requirements.* We recommend that you use an intake-air flow meter that meets the specifications in Table 1 of § 1065.205. This may include a laminar flow element, an ultrasonic flow meter, a subsonic venturi, a thermal-mass meter, an

averaging Pitot tube, or a hot-wire anemometer. Note that your overall system for measuring intake-air flow must meet the linearity verification in § 1065.307 and the calibration in § 1065.325.

(c) *Flow conditioning.* For any type of intake-air flow meter, condition the flow as needed to prevent wakes, eddies, circulating flows, or flow pulsations from affecting the accuracy or repeatability of the meter. You may accomplish this by using a sufficient length of straight tubing (such as a length equal to at least 10 pipe diameters) or by using specially designed tubing bends, orifice plates or straightening fins to establish a predictable velocity profile upstream of the meter.

§ 1065.230 Raw exhaust flow meter.

(a) *Application.* You may use measured raw exhaust flow, as follows:

(1) Use the actual value of calculated raw exhaust in the following cases:

(i) Multiply raw exhaust flow rate with continuously sampled concentrations.

(ii) Multiply total raw exhaust with batch sampled concentrations.

(2) In the following cases, you may use a raw exhaust flow meter signal that does not give the actual value of raw exhaust, as long as it is linearly proportional to the exhaust flow rate's actual calculated value:

(i) For feedback control of a proportional sampling system, such as a partial-flow dilution system.

(ii) For multiplying with continuously sampled gas concentrations, if the same signal is used in a chemical-balance calculation to determine work from brake-specific fuel consumption and fuel consumed.

(b) *Component requirements.* We recommend that you use a raw-exhaust flow meter that meets the specifications in Table 1 of § 1065.205. This may involve using an ultrasonic flow meter, a subsonic venturi, an averaging Pitot tube, a hot-wire anemometer, or other measurement principle. This would generally not involve a laminar flow element or a thermal-mass meter. Note that your overall system for measuring raw exhaust flow must meet the linearity verification in § 1065.307 and the calibration and verifications in § 1065.330. Any raw-exhaust meter must be designed to appropriately compensate for changes in the raw exhaust's thermodynamic, fluid, and compositional states.

(c) *Flow conditioning.* For any type of raw exhaust flow meter, condition the flow as needed to prevent wakes, eddies, circulating flows, or flow pulsations from affecting the accuracy or repeatability of the meter. You may accomplish this by using a sufficient length of straight tubing (such as a length equal to at least 10 pipe diameters) or by using specially designed tubing bends, orifice plates or straightening fins to establish a predictable velocity profile upstream of the meter.

(d) *Exhaust cooling.* You may cool raw exhaust upstream of a raw-exhaust flow meter, as long as you observe all the following provisions:

(1) Do not sample PM downstream of the cooling.

(2) If cooling causes exhaust temperatures above 202 °C to decrease to below 180 °C, do not sample NMHC downstream of the cooling for compression-ignition engines, 2-stroke spark-ignition engines, and 4-stroke spark ignition engines below 19 kW.

(3) If cooling causes aqueous condensation, do not sample NO_X downstream of the cooling unless the cooler meets the performance verification in § 1065.376.

(4) If cooling causes aqueous condensation before the flow reaches a flow meter, measure dewpoint, T_{dew} and pressure, p_{total} at the flow meter inlet. Use these values in emission calculations according to § 1065.650.

§ 1065.240 Dilution air and diluted exhaust flow meters.

(a) *Application.* Use a diluted exhaust flow meter to determine instantaneous diluted exhaust flow rates or total diluted exhaust flow over a test interval. You may use the difference between a diluted exhaust flow meter and a dilution air meter to calculate raw exhaust flow rates or total raw exhaust flow over a test interval.

(b) *Component requirements.* We recommend that you use a diluted exhaust flow meter that meets the specifications in Table 1 of § 1065.205. Note that your overall system for measuring diluted exhaust flow must meet the linearity verification in § 1065.307 and the calibration and verifications in § 1065.340 and § 1065.341. You may use the following meters:

(1) For constant-volume sampling (CVS) of the total flow of diluted exhaust, you may use a critical-flow venturi (CFV) or multiple critical-flow venturis arranged in parallel, a positive-displacement pump (PDP), a subsonic venturi (SSV), or an ultrasonic flow meter (UFM). Combined with an upstream heat exchanger, either a CFV or a PDP will also function as a passive flow controller in a CVS system. However, you may also combine any flow meter with any active flow control system to maintain proportional sampling of exhaust constituents. You may control the total flow of diluted exhaust, or one or more sample flows, or a combination of these flow controls to maintain proportional sampling.

(2) For any other dilution system, you may use a laminar flow element, an ultrasonic flow meter, a subsonic venturi, a critical-flow venturi or multiple critical-flow venturis arranged in parallel, a positive-displacement meter, a thermal-mass meter, an averaging Pitot tube, or a hot-wire anemometer.

(c) *Flow conditioning.* For any type of diluted exhaust flow meter, condition the flow as needed to prevent wakes, eddies, circulating flows, or flow pulsations from affecting the accuracy or repeatability of the meter. For some meters, you may accomplish this by using a sufficient length of straight tubing (such as a length equal to at least 10 pipe diameters) or by using specially designed tubing bends, orifice plates or straightening fins to establish a predictable velocity profile upstream of the meter.

(d) *Exhaust cooling.* You may cool diluted exhaust upstream of a raw-exhaust flow meter, as long as you observe all the following provisions:

(1) Do not sample PM downstream of the cooling.

(2) If cooling causes exhaust temperatures above 202 °C to decrease to below 180 °C, do not sample NMHC downstream of the cooling for compression-ignition engines, 2-stroke spark-ignition engines, and 4-stroke spark ignition engines below 19 kW.

(3) If cooling causes aqueous condensation, do not sample NO_X downstream of the cooling unless the cooler meets the performance verification in § 1065.376.

(4) If cooling causes aqueous condensation before the flow reaches a flow meter, measure dewpoint, T_{dew} and pressure, p_{total} at the flow meter inlet. Use these values in emission calculations according to § 1065.650.

§ 1065.245 Sample flow meter for batch sampling.

(a) *Application.* Use a sample flow meter to determine sample flow rates or total flow sampled into a batch sampling system over a test interval. You may use the difference between a diluted exhaust sample flow meter and a dilution air meter to calculate raw exhaust flow rates or total raw exhaust flow over a test interval.

(b) *Component requirements.* We recommend that you use a sample flow meter that meets the specifications in

Table 1 of § 1065.205. This may involve a laminar flow element, an ultrasonic flow meter, a subsonic venturi, a critical-flow venturi or multiple critical-flow venturis arranged in parallel, a positive-displacement meter, a thermal-mass meter, an averaging Pitot tube, or a hot-wire anemometer. Note that your overall system for measuring sample flow must meet the linearity verification in § 1065.307. For the special case where CFVs are used for both the diluted exhaust and sample-flow measurements and their upstream pressures and temperatures remain similar during testing, you do not have to quantify the flow rate of the sample-flow CFV. In this special case, the sample-flow CFV inherently flow-weights the batch sample relative to the diluted exhaust CFV.

(c) *Flow conditioning.* For any type of sample flow meter, condition the flow as needed to prevent wakes, eddies, circulating flows, or flow pulsations from affecting the accuracy or repeatability of the meter. For some meters, you may accomplish this by using a sufficient length of straight tubing (such as a length equal to at least 10 pipe diameters) or by using specially designed tubing bends, orifice plates or straightening fins to establish a predictable velocity profile upstream of the meter.

§ 1065.248 Gas divider.

(a) *Application.* You may use a gas divider to blend calibration gases.

(b) *Component requirements.* Use a gas divider that blends gases to the specifications of § 1065.750 and to the flow-weighted concentrations expected during testing. You may use critical-flow gas dividers, capillary-tube gas dividers, or thermal-mass-meter gas dividers. Note that your overall gas-divider system must meet the linearity verification in § 1065.307.

CO and CO_2 Measurements

§ 1065.250 Nondispersive infra-red analyzer.

(a) *Application.* Use a nondispersive infra-red (NDIR) analyzer to measure CO and CO2 concentrations in raw or diluted exhaust for either batch or continuous sampling.

(b) *Component requirements.* We recommend that you use an NDIR analyzer that meets the specifications in Table 1 of § 1065.205. Note that your NDIR-based system must meet the calibration and verifications in § 1065.350 and § 1065.355 and it must also meet the linearity verification in § 1065.307. You may use an NDIR analyzer that has compensation algorithms that are functions of other gaseous measurements and the engine's known or assumed fuel properties. The target value for any compensation algorithm is 0.0% (that is, no bias high and no bias low), regardless of the uncompensated signal's bias.

Hydrocarbon Measurements

§ 1065.260 Flame-ionization detector.

(a) *Application.* Use a flame-ionization detector (FID) analyzer to measure hydrocarbon concentrations in raw or diluted exhaust for either batch or continuous sampling. Determine hydrocarbon concentrations on a carbon number basis of one, C_1. Determine methane and nonmethane hydrocarbon values as described in paragraph (e) of this section. See subpart I of this part for special provisions that apply to measuring hydrocarbons when testing with oxygenated fuels.

(b) *Component requirements.* We recommend that you use a FID analyzer that meets the specifications in Table 1 of § 1065.205. Note that your FID-based system for measuring THC, THCE, or CH_4 must meet all of the verifications for hydrocarbon measurement in subpart D of this part, and it must also meet the linearity verification in § 1065.307. You may use a FID that has compensation algorithms that are functions of other gaseous measurements and the engine's known or assumed fuel properties. The target value for any compensation algorithm is 0.0% (that is, no bias high and no bias low), regardless of the uncompensated signal's bias.

(c) *Heated FID analyzers.* For diesel-fueled engines, two-stroke spark-ignition engines, and four-stroke spark-ignition engines below 19 kW, you must use heated FID analyzers that maintain all surfaces that are exposed to emissions at a temperature of (191 ± 11) °C.

(d) *FID fuel and burner air.* Use FID fuel and burner air that meet the specifications of § 1065.750. Do not allow the FID fuel and burner air to mix before entering the FID analyzer to ensure that the FID analyzer operates with a diffusion flame and not a premixed flame.

(e) *Methane.* FID analyzers measure total hydrocarbons (THC). To determine nonmethane hydrocarbons (NMHC), quantify methane, CH_4, either with a nonmethane cutter and a FID analyzer as described in § 1065.265, or with a gas chromatograph as described in § 1065.267. Instead of measuring methane, you may assume that 2% of measured total hydrocarbons is methane, as described in § 1065.660. For a FID analyzer used to determine NMHC, determine its response factor to CH_4, RF_{CH4}, as described in § 1065.360. Note that NMHC-related calculations are described in § 1065.660.

§ 1065.265 Nonmethane cutter.

(a) *Application.* You may use a nonmethane cutter to measure CH_4 with a FID analyzer. A nonmethane cutter oxidizes all nonmethane hydrocarbons to CO_2 and H_2O. You may use a nonmethane cutter for raw or diluted exhaust for batch or continuous sampling.

(b) *System performance.* Determine nonmethane-cutter performance as described in § 1065.365 and use the results to calculate NMHC emission in § 1065.660.

(c) *Configuration.* Configure the nonmethane cutter with a bypass line for the verification described in § 1065.365.

(d) *Optimization.* You may optimize a nonmethane cutter to maximize the penetration of CH_4 and the oxidation of all other hydrocarbons. You may humidify a sample and you may dilute a sample with purified air or oxygen (O_2) upstream of the nonmethane cutter to optimize its performance. You must account for any sample humidification and dilution in emission calculations.

§ 1065.267 Gas chromatograph.

(a) *Application.* You may use a gas chromatograph to measure CH_4 concentrations of diluted exhaust for batch sampling. While you may also use a nonmethane cutter to measure CH_4, as described in § 1065.265, use a reference procedure based on a gas chromatograph for comparison with any proposed alternate measurement procedure under § 1065.10.

(b) *Component requirements.* We recommend that you use a gas chromatograph that meets the specifications in Table 1 of § 1065.205, and it must also meet the linearity verification in § 1065.307.

NO_X Measurements

§ 1065.270 Chemiluminescent detector.

(a) *Application.* You may use a chemiluminescent detector (CLD) to measure NO_X concentration in raw or diluted exhaust for batch or continuous sampling. We generally accept a CLD for NO_X measurement, even though it measures only NO and NO_2, when coupled with an NO_2-to-NO converter, since conventional engines and aftertreatment systems do not emit significant amounts of NO_X species other than NO and NO_2. Measure other NO_X species if required by the standard-setting part. While you may also use other instruments to measure NO_X, as

described in § 1065.272, use a reference procedure based on a chemiluminescent detector for comparison with any proposed alternate measurement procedure under § 1065.10.

(b) *Component requirements.* We recommend that you use a CLD that meets the specifications in Table 1 of § 1065.205. Note that your CLD-based system must meet the quench verification in § 1065.370 and it must also meet the linearity verification in § 1065.307. You may use a heated or unheated CLD, and you may use a CLD that operates at atmospheric pressure or under a vacuum. You may use a CLD that has compensation algorithms that are functions of other gaseous measurements and the engine's known or assumed fuel properties. The target value for any compensation algorithm is 0.0% (that is, no bias high and no bias low), regardless of the uncompensated signal's bias.

(c) *NO_2-to-NO converter.* Place upstream of the CLD an internal or external NO_2-to-NO converter that meets the verification in § 1065.378. Configure the converter with a bypass to facilitate this verification.

(d) *Humidity effects.* You must maintain all CLD temperatures to prevent aqueous condensation. To remove humidity from a sample upstream of a CLD, use one of the following configurations:

(1) Connect a CLD downstream of any dryer or chiller that is downstream of an NO_2-to-NO converter that meets the verification in § 1065.378.

(2) Connect a CLD downstream of any dryer or thermal chiller that meets the verification in § 1065.376.

(e) *Response time.* You may use a heated CLD to improve CLD response time.

§ 1065.272 Nondispersive ultraviolet analyzer.

(a) *Application.* You may use a nondispersive ultraviolet (NDUV) analyzer to measure NO_X concentration in raw or diluted exhaust for batch or continuous sampling. We generally accept an NDUV for NO_X measurement, even though it measures only NO and NO_2, since conventional engines and aftertreatment systems do not emit significant amounts of other NO_X species. Measure other NO_X species if required by the standard-setting part.

(b) *Component requirements.* We recommend that you use an NDUV analyzer that meets the specifications in Table 1 of § 1065.205. Note that your NDUV-based system must meet the verifications in § 1065.372 and it must also meet the linearity verification in § 1065.307. You may use a NDUV analyzer that has compensation algorithms that are functions of other gaseous measurements and the engine's known or assumed fuel properties. The target value for any compensation algorithm is 0.0% (that is, no bias high and no bias low), regardless of the uncompensated signal's bias.

(c) *NO_2-to-NO converter.* If your NDUV analyzer measures only NO, place upstream of the NDUV analyzer an internal or external NO_2-to-NO converter that meets the verification in § 1065.378. Configure the converter with a bypass to facilitate this verification.

(d) *Humidity effects.* You must maintain NDUV temperature to prevent aqueous condensation, unless you use one of the following configurations:

(1) Connect an NDUV downstream of any dryer or chiller that is downstream of an NO_2-to-NO converter that meets the verification in § 1065.378.

(2) Connect an NDUV downstream of any dryer or thermal chiller that meets the verification in § 1065.376.

O_2 Measurements

§ 1065.280 Paramagnetic and magnetopneumatic O_2 detection analyzers.

(a) *Application.* You may use a paramagnetic detection (PMD) or magnetopneumatic detection MPD) analyzer to measure O_2 concentration in raw or diluted exhaust for batch or continuous sampling. You may use O_2 measurements with intake air or fuel flow measurements to calculate exhaust flow rate according to § 1065.650.

(b) *Component requirements.* We recommend that you use a PMD/MPD analyzer that meets the specifications in Table 1 of § 1065.205. Note that it must meet the linearity verification in § 1065.307. You may use a PMD/MPD that has compensation algorithms that are functions of other gaseous measurements and the engine's known or assumed fuel properties. The target value for any compensation algorithm is 0.0% (that is, no bias high and no bias low), regardless of the uncompensated signal's bias.

Air-to-Fuel Ratio Measurements

§ 1065.284 Zirconia (ZrO_2) analyzer.

(a) *Application.* You may use a zirconia (ZrO_2) analyzer to measure air-to-fuel ratio in raw exhaust for continuous sampling. You may use O_2 measurements with intake air or fuel flow measurements to calculate exhaust flow rate according to § 1065.650.

(b) *Component requirements.* We recommend that you use a ZrO_2 analyzer that meets the specifications in Table 1 of § 1065.205. Note that your ZrO_2-based system must meet the linearity verification in § 1065.307. You may use a Zirconia analyzer that has compensation algorithms that are functions of other gaseous measurements and the engine's known or assumed fuel properties. The target value for any compensation algorithm is 0.0% (that is, no bias high and no bias low), regardless of the uncompensated signal's bias.

PM Measurements

§ 1065.290 PM gravimetric balance.

(a) *Application.* Use a balance to weigh net PM on a sample medium for laboratory testing.

(b) *Component requirements.* We recommend that you use a balance that meets the specifications in Table 1 of § 1065.205. Note that your balance-based system must meet the linearity verification in § 1065.307. If the balance uses internal calibration weights for routine spanning and linearity verifications, the calibration weights must meet the specifications in § 1065.790. While you may also use an inertial balance to measure PM, as described in § 1065.295, use a reference procedure based on a gravimetric balance for comparison with any proposed alternate measurement procedure under § 1065.10.

(c) *Pan design.* We recommend that you use a balance pan designed to minimize corner loading of the balance, as follows:

(1) Use a pan that centers the PM sample on the weighing pan. For example, use a pan in the shape of a cross that has upswept tips that center the PM sample media on the pan.

(2) Use a pan that positions the PM sample as low as possible.

(d) *Balance configuration.* Configure the balance for optimum settling time and stability at your location.

§ 1065.295 PM inertial balance for field-testing analysis.

(a) *Application.* You may use an inertial balance to quantify net PM on a sample medium for field testing.

(b) *Component requirements.* We recommend that you use a balance that meets the specifications in Table 1 of § 1065.205. Note that your balance-based system must meet the linearity verification in § 1065.307. If the balance uses an internal calibration process for routine spanning and linearity verifications, the process must be NIST-traceable. You may use an inertial PM balance that has compensation algorithms that are functions of other gaseous measurements and the engine's known or assumed fuel properties. The target value for any compensation algorithm is 0.0% (that is, no bias high

and no bias low), regardless of the uncompensated signal's bias.

Subpart D—Calibrations and Verifications

§ 1065.301 Overview and general provisions.

(a) This subpart describes required and recommended calibrations and verifications of measurement systems. See subpart C of this part for specifications that apply to individual instruments.

(b) You must generally use complete measurement systems when performing calibrations or verifications in this subpart. For example, this would generally involve evaluating instruments based on values recorded with the complete system you use for recording test data, including analog-to-digital converters. For some calibrations and verifications, we may specify that you disconnect part of the measurement system to introduce a simulated signal.

(c) If we do not specify a calibration or verification for a portion of a measurement system, calibrate that portion of your system and verify its performance at a frequency consistent with any recommendations from the measurement-system manufacturer, consistent with good engineering judgment.

(d) Use NIST-traceable standards to the tolerances we specify for calibrations and verifications. Where we specify the need to use NIST-traceable standards, you may alternatively ask for our approval to use international standards that are not NIST-traceable.

§ 1065.303 Summary of required calibration and verifications.

The following table summarizes the required and recommended calibrations and verifications described in this subpart and indicates when these have to be performed:

TABLE 1 OF § 1065.303.—SUMMARY OF REQUIRED CALIBRATION AND VERIFICATIONS

Type of calibration or verification	Minimum frequency [a]
§ 1065.305: accuracy, repeatability and noise	*Accuracy:* Not required, but recommended for initial installation. *Repeatability:* Not required, but recommended for initial installation. *Noise:* Not required, but recommended for initial installation.
§ 1065.307: linearity	*Speed:* Upon initial installation, within 370 days before testing and after major maintenance. *Torque:* Upon initial installation, within 370 days before testing and after major maintenance. *Electrical power:* Upon initial installation, within 370 days before testing and after major maintenance. *Clean gas and diluted exhaust flows:* Upon initial installation, within 370 days before testing and after major maintenance, unless flow is verified by propane check or by carbon or oxygen balance. *Raw exhaust flow:* Upon initial installation, within 185 days before testing and after major maintenance, unless flow is verified by propane check or by carbon or oxygen balance. *Gas analyzers:* Upon initial installation, within 35 days before testing and after major maintenance. *PM balance:* Upon initial installation, within 370 days before testing and after major maintenance. *Stand-alone pressure and temperature:* Upon initial installation, within 370 days before testing and after major maintenance.
§ 1065.308: Continuous analyzer system response and recording.	Upon initial installation, after system reconfiguration, and after major maintenance.
§ 1065.309: Continuous analyzer uniform response.	Upon initial installation, after system reconfiguration, and after major maintenance.
§ 1065.310: torque	Upon initial installation and after major maintenance.
§ 1065.315: pressure, temperature, dewpoint	Upon initial installation and after major maintenance.
§ 1065.320: fuel flow	Upon initial installation and after major maintenance.
§ 1065.325: intake flow	Upon initial installation and after major maintenance.
§ 1065.330: exhaust flow	Upon initial installation and after major maintenance.
§ 1065.340: diluted exhaust flow (CVS)	Upon initial installation and after major maintenance.
§ 1065.341: CVS and batch sampler verification	Upon initial installation, within 35 days before testing, and after major maintenance.
§ 1065.345: vacuum leak	Before each laboratory test according to subpart F of this part and before each field test according to subpart J of this part.
§ 1065.350: CO_2 NDIRH_2O interference	Upon initial installation and after major maintenance.
§ 1065.355: CO NDIRCO_2 and H_2Ointerference	Upon initial installation and after major maintenance.
§ 1065.360: FID optimization, etc.	*Calibrate, optimize, and determine CH_4 response:* upon initial installation and after major maintenance. *Verify CH_4 response:* upon initial installation, within 185 days before testing, and after major maintenance.
§ 1065.362: raw exhaustFID O_2 interference	Upon initial installation, after FID optimization according to § 1065.360, and after major maintenance.
§ 1065.365:nonmethane cutter penetration	Upon initial installation, within 185 days before testing, and after major maintenance.
§ 1065.370: CLD CO_2 and H_2O quench	Upon initial installation and after major maintenance.
§ 1065.372: NDUV HC and H_2O interference	Upon initial installation and after major maintenance.
§ 1065.376: chiller NO_2 penetration	Upon initial installation and after major maintenance.
§ 1065.378: NO_2-to-NO converter conversion	Upon initial installation, within 35 days before testing, and after major maintenance.
§ 1065.390: PM balance and weighing	*Independent verification:* upon initial installation, within 370 days before testing, and after major maintenance. *Zero, span, and reference sample verifications:* within 12 hours of weighing, and after major maintenance.
§ 1065.395: Inertial PM balance and weighing	Independent verification: upon initial installation, within 370 days before testing, and after major maintenance.

TABLE 1 OF § 1065.303.—SUMMARY OF REQUIRED CALIBRATION AND VERIFICATIONS—Continued

Type of calibration or verification	Minimum frequency [a]
	Other verifications: upon initial installation and after major maintenance.

[a] Perform calibrations and verifications more frequently, according to measurement system manufacturer instructions and good engineering judgment.

§ 1065.305 Verifications for accuracy, repeatability, and noise.

(a) This section describes how to determine the accuracy, repeatability, and noise of an instrument. Table 1 of § 1065.205 specifies recommended values for individual instruments.

(b) We do not require you to verify instrument accuracy, repeatability, or noise.

However, it may be useful to consider these verifications to define a specification for a new instrument, to verify the performance of a new instrument upon delivery, or to troubleshoot an existing instrument.

(c) In this section we use the letter ''y'' to denote a generic measured quantity, the superscript over-bar to denote an arithmetic mean (such as $\bar{y}$), and the subscript ''$_{ref}$'' to denote the reference quantity being measured.

(d) Conduct these verifications as follows:

(1) Prepare an instrument so it operates at its specified temperatures, pressures, and flows. Perform any instrument linearization or calibration procedures prescribed by the instrument manufacturer.

(2) Zero the instrument as you would before an emission test by introducing a zero signal. Depending on the instrument, this may be a zero-concentration gas, a reference signal, a set of reference thermodynamic conditions, or some combination of these. For gas analyzers, use a zero gas that meets the specifications of § 1065.750.

(3) Span the instrument as you would before an emission test by introducing a span signal. Depending on the instrument, this may be a span-concentration gas, a reference signal, a set of reference thermodynamic conditions, or some combination of these. For gas analyzers, use a span gas that meets the specifications of § 1065.750.

(4) Use the instrument to quantify a NIST-traceable reference quantity, y_{ref}. For gas analyzers the reference gas must meet the specifications of § 1065.750. Select a reference quantity near the mean value expected during testing. For all gas analyzers, use a quantity near the flow-weighted mean concentration expected at the standard or expected during testing, whichever is greater. For a noise verfication, use the same zero gas from paragraph (e) of this section as the reference quantity. In all cases, allow time for the instrument to stabilize while it measures the reference quantity. Stabilization time may include time to purge an instrument and time to account for its response.

(5) Sample and record values for 30 seconds, record the arithmetic mean, $\bar{y}_i$, and record the standard deviation, σ_i, of the recorded values. Refer to § 1065.602 for an example of calculating arithmetic mean and standard deviation.

(6) Also, if the reference quantity is not absolutely constant, which might be the case with a reference flow, sample and record values of y_{refi} for 30 seconds and record the arithmetic mean of the values, $\bar{y}_{ref}$. Refer to § 1065.602 for an example of calculating arithmetic mean.

(7) Subtract the reference value, y_{ref} (or $\bar{y}_{ref}$), from the arithmetic mean, $\bar{y}_i$. Record this value as the error, ε_i.

(8) Repeat the steps specified in paragraphs (d)(2) through (6) of this section until you have ten arithmetic means ($\bar{y}_1$, $\bar{y}_2$, $\bar{y}_i$, * * * $\bar{y}_{10}$), ten standard deviations, (σ_1, σ_2, σ_i,* * *σ_{10}), and ten errors (ε_1, ε_2, ε_i, * * * ε_{10}).

(9) Use the following values to quantify your measurements:

(i) *Accuracy.* Instrument accuracy is the absolute difference between the reference quantity, y_{ref} (or $\bar{y}_{ref}$), and the arithmetic mean of the ten $\bar{y}_i$, $\bar{y}$ values. Refer to the example of an accuracy calculation in § 1065.602. We recommend that instrument accuracy be within the specifications in Table 1 of § 1065.205.

(ii) *Repeatability.* Repeatability is two times the standard deviation of the ten errors (that is, repeatability = $2 \cdot \sigma_\varepsilon$). Refer to the example of a standard-deviation calculation in § 1065.602. We recommend that instrument repeatability be within the specifications in Table 1 of § 1065.205.

(iii) *Noise.* Noise is two times the root-mean-square of the ten standard deviations (that is, noise = $2 \cdot rms_\sigma$) when the reference signal is a zero-quantity signal. Refer to the example of a root-mean-square calculation in § 1065.602. We recommend that instrument noise be within the specifications in Table 1 of § 1065.205. Use this value in the noise correction specified in § 1065.657.

(10) You may use a measurement instrument that does not meet the accuracy, repeatability, or noise specifications in Table 1 of § 1065.205, as long as you meet the following criteria:

(i) Your measurement systems meet all the other required calibration, verification, and validation specifications in subparts D, F, and J of this part, as applicable.

(ii) The measurement deficiency does not adversely affect your ability to demonstrate compliance with the applicable standards.

§ 1065.307 Linearity verification.

(a) *Scope and frequency.* Perform a linearity verification on each measurement system listed in Table 1 of this section at least as frequently as indicated in the table, consistent with measurement system manufacturer recommendations and good engineering judgment. Note that this linearity verification may replace requirements we previously referred to as ''calibrations''. The intent of a linearity verification is to determine that a measurement system responds proportionally over the measurement range of interest. A linearity verification generally consists of introducing a series of at least 10 reference values to a measurement system. The measurement system quantifies each reference value. The measured values are then collectively compared to the reference values by using a least squares linear regression and the linearity criteria specified in Table 1 of this section.

(b) *Performance requirements.* If a measurement system does not meet the applicable linearity criteria in Table 1 of this section, correct the deficiency by re-calibrating, servicing, or replacing components as needed. Before you may use a measurement system that does not meet linearity criteria, you must demonstrate to us that the deficiency does not adversely affect your ability to demonstrate compliance with the applicable standards.

(c) *Procedure.* Use the following linearity verification protocol, or use good engineering judgment to develop a different protocol that satisfies the

intent of this section, as described in paragraph (a) of this section:

(1) In this paragraph (c), we use the letter ''y'' to denote a generic measured quantity, the superscript over-bar to denote an arithmetic mean (such as $\bar{y}$), and the subscript ''$_{ref}$'' to denote the known or reference quantity being measured.

(2) Operate a measurement system at its specified temperatures, pressures, and flows. This may include any specified adjustment or periodic calibration of the measurement system.

(3) Zero the instrument as you would before an emission test by introducing a zero signal. Depending on the instrument, this may be a zero-concentration gas, a reference signal, a set of reference thermodynamic conditions, or some combination of these. For gas analyzers, use a zero gas that meets the specifications of § 1065.750 and introduce it directly at the analyzer port.

(4) Span the instrument as you would before an emission test by introducing a span signal. Depending on the instrument, this may be a span-concentration gas, a reference signal, a set of reference thermodynamic conditions, or some combination of these. For gas analyzers, use a span gas that meets the specifications of § 1065.750 and introduce it directly at the analyzer port.

(5) After spanning the instrument, check zero with the same signal you used in paragraph (c)(3) of this section. Based on the zero reading, use good engineering judgment to determine whether or not to rezero and or re-span the instrument before proceeding to the next step.

(6) Use instrument manufacturer recommendations and good engineering judgment to select at least 10 reference values, y_{refi}, that are within the range from zero to the highest values expected during emission testing. We recommend selecting a zero reference signal as one of the reference values of the linearity verification.

(7) Use instrument manufacturer recommendations and good engineering judgment to select the order in which you will introduce the series of reference values. For example you may select the reference values randomly to avoid correlation with previous measurements, you may select reference values in ascending or descending order to avoid long settling times of reference signals, or as another example you may select values to ascend and then descend which might incorporate the effects of any instrument hysteresis into the linearity verification.

(8) Generate reference quantities as described in paragraph (d) of this section. For gas analyzers, use gas concentrations known to be within the specifications of § 1065.750 and introduce them directly at the analyzer port.

(9) Introduce a reference signal to the measurement instrument.

(10) Allow time for the instrument to stabilize while it measures the reference value. Stabilization time may include time to purge an instrument and time to account for its response.

(11) At a recording frequency of at least f Hz, specified in Table 1 of § 1065.205, measure the reference value for 30 seconds and record the arithmetic mean of the recorded values, $\bar{y}_i$. Refer to § 1065.602 for an example of calculating an arithmetic mean.

(12) Repeat steps in paragraphs (c)(9) through (11) of this section until all reference quantities are measured.

(13) Use the arithmetic means y_i, and reference values, y_{refi} , to calculate least-squares linear regression parameters and statistical values to compare to the minimum performance criteria specified in Table 1 of this section. Use the calculations described in § 1065.602.

(d) *Reference signals.* This paragraph (d) describes recommended methods for generating reference values for the linearity-verification protocol in paragraph (c) of this section. Use reference values that simulate actual values, or introduce an actual value and measure it with a reference-measurement system. In the latter case, the reference value is the value reported by the reference-measurement system. Reference values and reference-measurement systems must be NIST-traceable. We recommend using calibration reference quantities that are NIST-traceable within 0.5% uncertainty, if not specified otherwise in other sections of this part 1065. Use the following recommended methods to generate reference values or use good engineering judgment to select a different reference:

(1) *Engine speed.* Run the engine or dynamometer at a series of steady-state speeds and use a strobe, a photo tachometer, or a laser tachometer to record reference speeds.

(2) *Engine torque.* Use a series of calibration weights and a calibration lever arm to simulate engine torque. You may instead use the engine or dynamometer itself to generate a nominal torque that is measured by a reference load cell or proving ring in series with the torque-measurement system. In this case use the reference load cell measurement as the reference value. Refer to § 1065.310 for a torque-calibration procedure similar to the linearity verification in this section.

(3) *Electrical work.* Use a controlled source of current and a watt-hour standard reference meter. Complete calibration systems that contain a current source and a reference watt-hour meter are commonly used in the electrical power distribution industry and are therefore commercially available.

(4) *Fuel rate.* Operate the engine at a series of constant fuel-flow rates or re-circulate fuel back to a tank through the fuel flow meter at different flow rates. Use a gravimetric reference measurement (such as a scale, balance, or mass comparator) at the inlet to the fuel-measurement system. Use a stopwatch or timer to measure the time intervals over which reference masses of fuel are introduced to the fuel measurement system. The reference fuel mass divided by the time interval is the reference fuel flow rate.

(5) *Flow rates—inlet air, dilution air, diluted exhaust, raw exhaust, or sample flow.* Use a reference flow meter with a blower or pump to simulate flow rates. Use a restrictor, diverter valve, a variable-speed blower or a variable-speed pump to control the range of flow rates. Use the reference meter's response as the reference values.

(i) *Reference flow meters.* Because the flow range requirements for these various flows are large, we allow a variety of reference meters. For example, for diluted exhaust flow for a full-flow dilution system, we recommend a reference subsonic venturi flow meter with a restrictor valve and a blower to simulate flow rates. For inlet air, dilution air, diluted exhaust for partial-flow dilution, raw exhaust, or sample flow, we allow reference meters such as critical flow orifices, critical flow venturis, laminar flow elements, master mass flow standards, or Roots meters. Make sure the reference meter is calibrated by the flow-meter manufacturer and its calibration is NIST-traceable. If you use the difference of two flow measurements to determine a net flow rate, you may use one of the measurements as a reference for the other.

(ii) *Reference flow values.* Because the reference flow is not absolutely constant, sample and record values of $\dot{n}_{refi}$ for 30 seconds and use the arithmetic mean of the values, $\bar{\dot{n}}_{ref}$, as the reference value. Refer to § 1065.602 for an example of calculating arithmetic mean.

(6) *Gas division.* Use one of the two reference signals: (i) At the outlet of the gas-division system, connect a gas analyzer that meets the linearity

verification described in this section and has not been linearized with the gas divider being verified. For example, verify the linearity of an analyzer using a series of reference analytical gases directly from compressed gas cylinders that meet the specifications of § 1065.750. We recommend using a FID analyzer or a PMD/MPD O_2 analyzer because of their inherent linearity. Operate this analyzer consistent with how you would operate it during an emission test. Connect a span gas to the gas-divider inlet. Use the gas-division system to divide the span gas with purified air or nitrogen. Select gas divisions that you typically use. Use a selected gas division as the measured value. Use the analyzer response divided by the span gas concentration as the reference gas-division value. Because the instrument response is not absolutely constant, sample and record values of x_{refi} for 30 seconds and use the arithmetic mean of the values $\bar{x}_{refi}$, as the reference value. Refer to § 1065.602 for an example of calculating arithmetic mean.

(ii) Using good engineering judgment and gas divider manufacturer recommendations, use one or more reference flow meters to verify the measured flow rates of the gas divider.

(7) *Continuous constituent concentration.* For reference values, use a series of gas cylinders of known gas concentration or use a gas-division system that is known to be linear with a span gas. Gas cylinders, gas-division systems, and span gases that you use for reference values must meet the specifications of § 1065.750.

Table 1 of §1065.307–Measurement systems that require linearity verifications

Measurement System	Quantity	Minimum verification frequency[a]	Linearity Criteria			
			$\lvert a_0 \rvert$ [b]	a_1 [c]	SEE[b]	r^2
Engine speed	f_n	Within 370 days before testing	$\leq 0.05\ \% \cdot f_{nmax}$	0.98-1.02	$\leq 2\ \% \cdot f_{nmax}$	≥ 0.990
Engine torque	T	Within 370 days before testing	$\leq 1\ \% \cdot T_{max}$	0.98-1.02	$\leq 2\ \% \cdot T_{max}$	≥ 0.990
Electrical work	W	Within 370 days before testing	$\leq 1\ \% \cdot W_{max}$	0.98-1.02	$\leq 2\ \% \cdot W_{max}$	≥ 0.990
Fuel flow rate	$\dot{m}$	Within 370 days before testing[d]	$\leq 1\ \% \cdot \dot{m}_{max}$	0.98-1.02 [e]	$\leq 2\ \% \cdot \dot{m}_{max}$	≥ 0.990
Intake-air flow rate	$\dot{n}$	Within 370 days before testing [d]	$\leq 1\ \% \cdot \dot{n}_{max}$	0.98-1.02 [e]	$\leq 2\ \% \cdot \dot{n}_{max}$	≥ 0.990
Dilution air flow rate	$\dot{n}$	Within 370 days before testing [d]	$\leq 1\ \% \cdot \dot{n}_{max}$	0.98-1.02	$\leq 2\ \% \cdot \dot{n}_{max}$	≥ 0.990
Diluted exhaust flow rate	$\dot{n}$	Within 370 days before testing [d]	$\leq 1\ \% \cdot \dot{n}_{min}$	0.98-1.02	$\leq 2\ \% \cdot \dot{n}_{max}$	≥ 0.990
Raw exhaust flow rate	$\dot{n}$	Within 185 days before testing [d]	$\leq 1\ \% \cdot \dot{n}_{max}$	0.98-1.02 [e]	$\leq 2\ \% \cdot \dot{n}_{max}$	≥ 0.990
Batch sampler flow rates	$\dot{n}$	Within 370 days before testing [d]	$\leq 1\ \% \cdot \dot{n}_{max}$	0.98-1.02	$\leq 2\ \% \cdot \dot{n}_{max}$	≥ 0.990
Gas dividers	x	Within 370 days before testing	$\leq 0.5\ \% \cdot x_{max}$	0.98-1.02	$\leq 2\ \% \cdot x_{max}$	≥ 0.990
All gas analyzers	x	Within 35 days before testing	$\leq 0.5\ \% \cdot x_{max}$	0.99-1.01	$\leq 1\ \% \cdot x_{max}$	≥ 0.998
PM balance	m	Within 370 days before testing	$\leq 1\ \% \cdot m_{max}$	0.99-1.01	$\leq 1\ \% \cdot m_{max}$	≥ 0.998
Stand-alone pressures	p	Within 370 days before testing	$\leq 1\ \% \cdot p_{max}$	0.99-1.01	$\leq 1\ \% \cdot p_{max}$	≥ 0.998
Stand-alone temperatures	T	Within 370 days before testing	$\leq 1\ \% \cdot T_{max}$	0.99-1.01	$\leq 1\ \% \cdot T_{max}$	≥ 0.998

[a] Perform a linearity verification more frequently if the instrument manufacturer recommends it or based on good engineering judgment.

[b] "max" refers to the maximum value expected during a test—the maximum value used for the linearity verification.

[c] The specified ranges are inclusive. For example, a specified range of 0.98-1.02 for a_1 means $0.98 \leq a_1 \leq 1.02$.

[d] These linearity verifications are not required for systems that pass the flow-rate verification for diluted exhaust as described in §1065.341 (the propane check) or for systems that agree within ±2 % based on a chemical balance of carbon or oxygen of the intake air, fuel, and exhaust.

[e] a_0 and a_1 for these quantities are required only if the actual value of the quantity is required, as opposed to a signal that is only linearly proportional to the actual value.

§ 1065.308 Continuous gas analyzer system-response and updating-recording verification.

(a) *Scope and frequency.* Perform this verification after installing or replacing a gas analyzer that you use for continuous sampling. Also perform this verification if you reconfigure your system in a way that would change system response. For example, perform this verification if you add a significant volume to the transfer lines by increasing their length or adding a filter; or if you change the frequency at which you sample and record gas-analyzer concentrations.

(b) *Measurement principles.* This test verifies that the updating and recording frequencies match the overall system response to a rapid change in the value of concentrations at the sample probe. Gas analyzer systems must be optimized such that their overall response to a rapid change in concentration is updated and recorded at an appropriate frequency to prevent loss of information.

(c) *System requirements.* To demonstrate acceptable updating and recording with respect to the system's overall response, use good engineering judgment to select one of the following criteria that your system must meet:

(1) The product of the mean rise time and the frequency at which the system records an updated concentration must be at least 5, and the product of the mean fall time and the frequency at

which the system records an updated concentration must be at least 5. This criteria makes no assumption regarding the frequency content of changes in emission concentrations during emission testing; therefore, it is valid for any testing.

(2) The frequency at which the system records an updated concentration must be at least 5 Hz. This criteria assumes that the frequency content of significant changes in emission concentrations during emission testing do not exceed 1 Hz.

(3) You may use other criteria if we approve the criteria in advance.

(4) For PEMS, you do not have to meet this criteria if your PEMS meets the overall PEMS check in § 1065.920.

(d) *Procedure.* Use the following procedure to verify the response of a continuous gas analyzer system:

(1) *Instrument setup.* Follow the analyzer system manufacturer's start-up and operating instructions. Adjust the system as needed to optimize performance.

(2) *Equipment setup.* Using minimal gas transfer line lengths between all connections, connect a zero-air source to one inlet of a fast-acting 3-way valve (2 inlets, 1 outlet). Using a gas divider, equally blend an NO–CO–CO_2–C_3H_8–CH_4 (balance N_2) span gas with a span gas of NO_2. Connect the gas divider outlet to the other inlet of the 3-way valve. Connect the valve outlet to an overflow at the gas analyzer system's probe or to an overflow fitting between the probe and transfer line to all the analyzers being verified.

(3) *Data collection.* (i) Switch the valve to flow zero gas.

(ii) Allow for stabilization, accounting for transport delays and the slowest instrument's full response.

(iii) Start recording data at the frequency used during emission testing. Each recorded value must be a unique updated concentration measured by the analyzer; you may not use interpolation to increase the number of recorded values.

(iv) Switch the valve to flow the blended span gases.

(v) Allow for transport delays and the slowest instrument's full response.

(vi) Repeat the steps in paragraphs (d)(3)(i) through (v) of this section to record seven full cycles, ending with zero gas flowing to the analyzers.

(vii) Stop recording.

(e) *Performance evaluation.* (1) If you chose to demonstrate compliance with paragraph

(c)(1) of this section, use the data from paragraph (d)(3) of this section to calculate the mean rise time, $T_{10–90}$, and mean fall time, $T_{90–10}$, for each of the analyzers. Multiply these times (in seconds) by their respective recording frequencies in Hertz (1/second). The value for each result must be at least 5. If the value is less than 5, increase the recording frequency or adjust the flows or design of the sampling system to increase the rise time and fall time as needed. You may also configure digital filters to increase rise and fall times.

(2) If a measurement system fails the criterion in paragraph (e)(1) of this section, ensure that signals from the system are updated and recorded at a frequency of at least 5 Hz.

(3) If a measurement system fails the criteria in paragraphs (e)(1) and (2) of this section, you may use the continuous analyzer system only if the deficiency does not adversely affect your ability to show compliance with the applicable standards.

§ 1065.309 Continuous gas analyzer uniform response verification.

(a) *Scope and frequency.* If you use more than one continuous gas analyzer to quantify a gaseous constituent, you must perform this verification. For example, if you determine NMHC as the difference between continuous THC and CH_4 measurements, you must perform this verification on your NMHC measurement system. As another example if you determine NO_X as the sum of separate continuous measurements of NO and NO_2, you must perform this verification on your NO_X measurement system. Also, you must perform this verification if you use one continuous analyzer to apply an interference compensation algorithm to another continuous gas analyzer. Perform this verification after initial installation or major maintenance. Also perform this verification if you reconfigure your system in a way that would change system response. For example, perform this verification if you add a significant volume to the transfer lines by increasing their length or by adding a filter; or if you change the frequency at which you sample and record gas-analyzer concentrations.

(b) *Measurement principles.* This procedure verifies the time-alignment and uniform response of combined continuous gas measurements.

(c) *System requirements.* Demonstrate that combined continuous concentration measurements have a uniform rise and fall during a simultaneous to a step change in both concentrations. During a system response to a rapid change in multiple gas concentrations, demonstrate that the t_{50} times of all combined analyzers all occur at the same recorded second of data or between the same two recorded seconds of data.

(d) *Procedure.* Use the following procedure to verify the response of a continuous gas analyzer system:

(1) *Instrument setup.* Follow the analyzer system manufacturer's start-up and operating instructions. Adjust the system as needed to optimize performance.

(2) *Equipment setup.* Using minimal gas transfer line lengths between all connections, connect a zero-air source to the inlet of a 100 °C heated line. Connect the heated line outlet to one inlet of a 100 °C heated fast-acting 3-way valve (2 inlets, 1 outlet). Using a gas divider, equally blend an NO–CO–CO_2–C_3H_8–CH_4 (balance N_2) span gas with a span gas of NO_2 (balance N_2). Connect the gas divider outlet to the inlet of a 50 °C heated line. Connect the heated line outlet to the inlet of a 50 °C gas bubbler filled with distilled water. Connect the bubbler outlet to another heated line at 100 °C. Connect the outlet of the 100 °C line to the other inlet of the 3-way valve. Connect the valve outlet to an overflow at the gas analyzer system's probe or to an overflow fitting between the probe and transfer line to all the analyzers being verified.

(3) *Data collection.* (i) Switch the valve to flow zero gas.

(ii) Allow for stabilization, accounting for transport delays and the slowest instrument's full response.

(iii) Start recording data at the frequency used during emission testing.

(iv) Switch the valve to flow span gas.

(v) Allow for transport delays and the slowest instrument's full response.

(vi) Repeat the steps in paragraphs (d)(3)(i) through (v) of this section to record seven full cycles, ending with zero gas flowing to the analyzers.

(vii) Stop recording.

(e) *Performance evaluations.* Perform the following evaluations:

(1) *Uniform response evaluation.* (i) Calculate the mean rise time, $t_{10–90}$, mean fall time, $t_{90–10}$ for each analyzer.

(ii) Determine the maximum mean rise and fall times for the slowest responding analyzer in each combination of continuous analyzer signals that you use to determine a single emission concentration.

(iii) If the maximum rise time or fall time is greater than one second, verify that all other gas analyzers combined with it have mean rise and fall times of at least 75% of that analyzer's response.

(iv) If any analyzer has shorter rise or fall times, disperse that signal so that it better matches the rise and fall times of the slowest signal with which it is combined. We recommend that you perform dispersion using SAE 2001–01–

3536 (incorporated by reference in § 1065.1010) as a guide.

(v) Repeat this verification after optimizing your systems to ensure that you dispersed signals correctly. If after repeated attempts at dispersing signals your system still fails this verification, you may use the continuous analyzer system if the deficiency does not adversely affect your ability to show compliance with the applicable standards.

(2) *Time alignment evaluation.* (i) After all signals are adjusted to meet the uniform response evaluation, determine the second at which—or the two seconds between which—each analyzer crossed the midpoint of its response, t_{50}.

(ii) Verify that all combined gas analyzer signals are time-aligned such that all of their t_{50} times occurred at the same second or between the same two seconds in the recorded data.

(iii) If your system fails to meet this criterion, you may change the time alignment of your system and retest the system completely. If after changing the time alignment of your system, some of the t_{50} times still are not aligned, take corrective action by dispersing analyzer signals that have the shortest rise and fall times.

(iv) If some t_{50} times are still not aligned after repeated attempts at dispersion and time alignment, you may use the continuous analyzer system if the deficiency does not adversely affect your ability to show compliance with the applicable standards.

Measurement of Engine Parameters and Ambient Conditions

§ 1065.310 Torque calibration.

(a) *Scope and frequency.* Calibrate all torque-measurement systems including dynamometer torque measurement transducers and systems upon initial installation and after major maintenance. Use good engineering judgment to repeat the calibration. Follow the torque transducer manufacturer's instructions for linearizing your torque sensor's output. We recommend that you calibrate the torque-measurement system with a reference force and a lever arm.

(b) *Recommended procedure.* (1) *Reference force quantification.* Use either a set of dead-weights or a reference meter such as strain gage or a proving ring to quantify the reference force, NIST-traceable within ±0.5% uncertainty.

(2) *Lever-arm length quantification.* Quantify the lever arm length, NIST-traceable within ±0.5% uncertainty. The lever arm's length must be measured from the centerline of the dynamometer to the point at which the reference force is measured. The lever arm must be perpendicular to gravity (i.e., horizontal), and it must be perpendicular to the dynamometer's rotational axis. Balance the lever arm's torque or quantify its net hanging torque, NIST-traceable within ±1% uncertainty, and account for it as part of the reference torque.

(c) *Dead-weight calibration.* This technique applies a known force by hanging known weights at a known distance along a lever arm. Make sure the weights' lever arm is perpendicular to gravity (*i.e.,* horizontal) and perpendicular to the dynamometer's rotational axis. Apply at least six calibration-weight combinations for each applicable torque-measuring range, spacing the weight quantities about equally over the range. Oscillate or rotate the dynamometer during calibration to reduce frictional static hysteresis. Determine each weight's force by multiplying its NIST-traceable mass by the local acceleration of Earth's gravity (using this equation: force = mass · acceleration). The local acceleration of gravity, a_g, at your latitude, longitude, and elevation may be determined by entering position and elevation data into the U.S. National Oceanographic and Atmospheric Administration's surface gravity prediction Web site at *http://www.ngs.noaa.gov/cgi-bin/grav_pdx.prl*. If this Web site is unavailable, you may use the equation in § 1065.630, which returns the local acceleration of gravity based on a given latitude. In this case, calculate the reference torque as the weights' reference force multiplied by the lever arm reference length (using this equation: torque = force · lever arm length).

(d) *Strain gage or proving ring calibration.* This technique applies force either by hanging weights on a lever arm (these weights and their lever arm length are not used) or by operating the dynamometer at different torques. Apply at least six force combinations for each applicable torque-measuring range, spacing the force quantities about equally over the range. Oscillate or rotate the dynamometer during calibration to reduce frictional static hysteresis. In this case, the reference torque is determined by multiplying the reference meter force output by its effective lever-arm length, which you measure from the point where the force measurement is made to the dynamometer's rotational axis. Make sure you measure this length perpendicular to gravity (*i.e.,* horizontal) and perpendicular to the dynamometer's rotational axis.

§ 1065.315 Pressure, temperature, and dewpoint calibration.

(a) Calibrate instruments for measuring pressure, temperature, and dewpoint upon initial installation. Follow the instrument manufacturer's instructions and use good engineering judgment to repeat the calibration, as follows:

(1) *Pressure.* We recommend temperature-compensated, digital-pneumatic, or deadweight pressure calibrators, with data-logging capabilities to minimize transcription errors. We recommend using calibration reference quantities that are NIST-traceable within 0.5% uncertainty.

(2) *Temperature.* We recommend digital dry-block or stirred-liquid temperature calibrators, with datalogging capabilities to minimize transcription errors. We recommend using calibration reference quantities that are NIST-traceable within 0.5% uncertainty.

(3) *Dewpoint.* We recommend a minimum of three different temperature-equilibrated and temperature-monitored calibration salt solutions in containers that seal completely around the dewpoint sensor. We recommend using calibration reference quantities that are NIST-traceable within 0.5% uncertainty.

(b) You may remove system components for off-site calibration. We recommend specifying calibration reference quantities that are NIST-traceable within 0.5% uncertainty.

Flow-Related Measurements

§ 1065.320 Fuel-flow calibration.

(a) Calibrate fuel-flow meters upon initial installation. Follow the instrument manufacturer's instructions and use good engineering judgment to repeat the calibration.

(b) You may also develop a procedure based on a chemical balance of carbon or oxygen in engine exhaust.

(c) You may remove system components for off-site calibration. When installing a flow meter with an off-site calibration, we recommend that you consider the effects of the tubing configuration upstream and downstream of the flow meter. We recommend specifying calibration reference quantities that are NIST-traceable within 0.5% uncertainty.

§ 1065.325 Intake-flow calibration.

(a) Calibrate intake-air flow meters upon initial installation. Follow the instrument manufacturer's instructions and use good engineering judgment to repeat the calibration. We recommend using a calibration subsonic venturi, ultrasonic flow meter or laminar flow

element. We recommend using calibration reference quantities that are NIST-traceable within 0.5% uncertainty.

(b) You may remove system components for off-site calibration. When installing a flow meter with an off-site calibration, we recommend that you consider the effects of the tubing configuration upstream and downstream of the flow meter. We recommend specifying calibration reference quantities that are NIST-traceable within 0.5% uncertainty.

(c) If you use a subsonic venturi or ultrasonic flow meter for intake flow measurement, we recommend that you calibrate it as described in § 1065.340.

§ 1065.330 Exhaust-flow calibration.

(a) Calibrate exhaust-flow meters upon initial installation. Follow the instrument manufacturer's instructions and use good engineering judgment to repeat the calibration. We recommend that you use a calibration subsonic venturi or ultrasonic flow meter and simulate exhaust temperatures by incorporating a heat exchanger between the calibration meter and the exhaust-flow meter. If you can demonstrate that the flow meter to be calibrated is insensitive to exhaust temperatures, you may use other reference meters such as laminar flow elements, which are not commonly designed to withstand typical raw exhaust temperatures. We recommend using calibration reference quantities that are NIST-traceable within 0.5% uncertainty.

(b) You may remove system components for off-site calibration. When installing a flow meter with an off-site calibration, we recommend that you consider the effects of the tubing configuration upstream and downstream of the flow meter. We recommend specifying calibration reference quantities that are NIST-traceable within 0.5% uncertainty.

(c) If you use a subsonic venturi or ultrasonic flow meter for raw exhaust flow measurement, we recommend that you calibrate it as described in § 1065.340.

§ 1065.340 Diluted exhaust flow (CVS) calibration.

(a) *Overview*. This section describes how to calibrate flow meters for diluted exhaust constant-volume sampling (CVS) systems.

(b) *Scope and frequency*. Perform this calibration while the flow meter is installed in its permanent position. Perform this calibration after you change any part of the flow configuration upstream or downstream of the flow meter that may affect the flow-meter calibration. Perform this calibration upon initial CVS installation and whenever corrective action does not resolve a failure to meet the diluted exhaust flow verification (*i.e.*, propane check) in § 1065.341.

(c) *Reference flow meter*. Calibrate a CVS flow meter using a reference flow meter such as a subsonic venturi flow meter, a long-radius ASME/NIST flow nozzle, a smooth approach orifice, a laminar flow element, a set of critical flow venturis, or an ultrasonic flow meter. Use a reference flow meter that reports quantities that are NIST-traceable within ±1% uncertainty. Use this reference flow meter's response to flow as the reference value for CVS flow-meter calibration.

(d) *Configuration*. Do not use an upstream screen or other restriction that could affect the flow ahead of the reference flow meter, unless the flow meter has been calibrated with such a restriction.

(e) *PDP calibration*. Calibrate a positive-displacement pump (PDP) to determine a flow-versus-PDP speed equation that accounts for flow leakage across sealing surfaces in the PDP as a function of PDP inlet pressure. Determine unique equation coefficients for each speed at which you operate the PDP. Calibrate a PDP flow meter as follows:

(1) Connect the system as shown in Figure 1 of this section.

(2) Leaks between the calibration flow meter and the PDP must be less than 0.3% of the total flow at the lowest calibrated flow point; for example, at the highest restriction and lowest PDP-speed point.

(3) While the PDP operates, maintain a constant temperature at the PDP inlet within ±2% of the mean absolute inlet temperature, $\bar{T}_{in}$.

(4) Set the PDP speed to the first speed point at which you intend to calibrate.

(5) Set the variable restrictor to its wide-open position.

(6) Operate the PDP for at least 3 min to stabilize the system. Continue operating the PDP and record the mean values of at least 30 seconds of sampled data of each of the following quantities:

(i) The mean flow rate of the reference flow meter, $\bar{n}_{ref}$. This may include several measurements of different quantities, such as reference meter pressures and temperatures, for calculating $\bar{n}_{ref}$.

(ii) The mean temperature at the PDP inlet, $\bar{T}_{in}$.

(iii) The mean static absolute pressure at the PDP inlet, $\bar{P}_{in}$.

(iv) The mean static absolute pressure at the PDP outlet, $\bar{P}_{out}$.

(v) The mean PDP speed, $\bar{f}_{nPDP}$.

(7) Incrementally close the restrictor valve to decrease the absolute pressure at the inlet to the PDP, $\bar{P}_{in}$.

(8) Repeat the steps in paragraphs (e)(6) and (7) of this section to record data at a minimum of six restrictor positions reflecting the full range of possible in-use pressures at the PDP inlet.

(9) Calibrate the PDP by using the collected data and the equations in § 1065.640.

(10) Repeat the steps in paragraphs (e)(6) through (9) of this section for each speed at which you operate the PDP.

(11) Use the equations in § 1065.642 to determine the PDP flow equation for emission testing.

(12) Verify the calibration by performing a CVS verification (*i.e.*, propane check) as described in § 1065.341.

(13) Do not use the PDP below the lowest inlet pressure tested during calibration.

(f) *CFV calibration*. Calibrate a critical-flow venturi (CFV) to verify its discharge coefficient, C_d, at the lowest expected static differential pressure between the CFV inlet and outlet. Calibrate a CFV flow meter as follows:

(1) Connect the system as shown in Figure 1 of this section.

(2) Start the blower downstream of the CFV.

(3) While the CFV operates, maintain a constant temperature at the CFV inlet within ±2% of the mean absolute inlet temperature, $\bar{T}_{in}$.

(4) Leaks between the calibration flow meter and the CFV must be less than 0.3 % of the total flow at the highest restriction.

(5) Set the variable restrictor to its wide-open position.

(6) Operate the CFV for at least 3 min to stabilize the system. Continue operating the CFV and record the mean values of at least 30 seconds of sampled data of each of the following quantities:

(i) The mean flow rate of the reference flow meter, $\bar{n}_{ref}$. This may include several measurements of different quantities, such as reference meter pressures and temperatures, for calculating $\bar{n}_{ref}$.

(ii) Optionally, the mean dewpoint of the calibration air, $\bar{T}_{dew}$. See § 1065.640 for permissible assumptions.

(iii) The mean temperature at the venturi inlet, $\bar{T}_{in}$.

(iv) The mean static absolute pressure at the venturi inlet, $\bar{P}_{in}$.

(v) The mean static differential pressure between the CFV inlet and the CFV outlet, $\Delta\bar{P}_{CFV}$.

(7) Incrementally close the restrictor valve to decrease the absolute pressure at the inlet to the CFV, P_{in}.

(8) Repeat the steps in paragraphs (f)(6) and (7) of this section to record mean data at a minimum of ten restrictor positions, such that you test the fullest practical range of $\Delta\bar{P}_{CFV}$ expected during testing. We do not require that you remove calibration components or CVS components to calibrate at the lowest possible restrictions.

(9) Determine C_d and the lowest allowable $\Delta\bar{P}_{CFV}$ as described in § 1065.640.

(10) Use C_d to determine CFV flow during an emission test. Do not use the CFV below the lowest allowed $\Delta\bar{P}_{CFV}$, as determined in § 1065.640.

(11) Verify the calibration by performing a CVS verification (*i.e.*, propane check) as described in § 1065.341.

(12) If your CVS is configured to operate more than one CFV at a time in parallel, calibrate your CVS by one of the following:

(i) Calibrate every combination of CFVs according to this section and § 1065.640. Refer to § 1065.642 for instructions on calculating flow rates for this option.

(ii) Calibrate each CFV according to this section and § 1065.640. Refer to § 1065.642 for instructions on calculating flow rates for this option.

(g) *SSV calibration.* Calibrate a subsonic venturi (SSV) to determine its calibration coefficient, C_d , for the expected range of inlet pressures. Calibrate an SSV flow meter as follows:

(1) Connect the system as shown in Figure 1 of this section.

(2) Start the blower downstream of the SSV.

(3) Leaks between the calibration flow meter and the SSV must be less than 0.3 % of the total flow at the highest restriction.

(4) While the SSV operates, maintain a constant temperature at the SSV inlet within ±2 % of the mean absolute inlet temperature.

(5) Set the variable restrictor or variable-speed blower to a flow rate greater than the greatest flow rate expected during testing. You may not extrapolate flow rates beyond calibrated values, so we recommend that you make sure the Reynolds number, Re#, at the SSV throat at the greatest calibrated flow rate is greater than the maximum Re# expected during testing.

(6) Operate the SSV for at least 3 min to stabilize the system. Continue operating the SSV and record the mean of at least 30 seconds of sampled data of each of the following quantities:

(i) The mean flow rate of the reference flow meter, $\bar{n}_{ref}$. This may include several measurements of different quantities, such as reference meter pressures and temperatures, for caculating $\bar{n}_{ref}$.

(ii) Optionally, the mean dewpoint of the calibration air, $\bar{T}_{dew}$. See § 1065.640 for permissible assumptions.

(iii) The mean temperature at the venturi inlet, $\bar{T}_{in}$.

(iv) The mean static absolute pressure at the venturi inlet, $\bar{P}_{in}$.

(v) Static differential pressure between the static pressure at the venturi inlet and the static pressure at the venturi throat, $\Delta\bar{P}_{SSV}$.

(7) Incrementally close the restrictor valve or decrease the blower speed to decrease the flow rate.

(8) Repeat the steps in paragraphs (g)(6) and (7) of this section to record data at a minimum of ten flow rates.

(9) Determine a functional form of C_d versus Re# by using the collected data and the equations in § 1065.640.

(10) Verify the calibration by performing a CVS verification (*i.e.*, propane check) as described in § 1065.341 using the new C_d versus $Re^{\#}$ equation.

(11) Use the SSV only between the minimum and maximum calibrated flow rates.

(12) Use the equations in § 1065.642 to determine SSV flow during a test.

(h) *Ultrasonic flow meter calibration.* [Reserved]

BILLING CODE 6560–50–P

Figure 1 of §1065.340—Schematic diagrams for diluted exhaust flow (CVS) calibration.

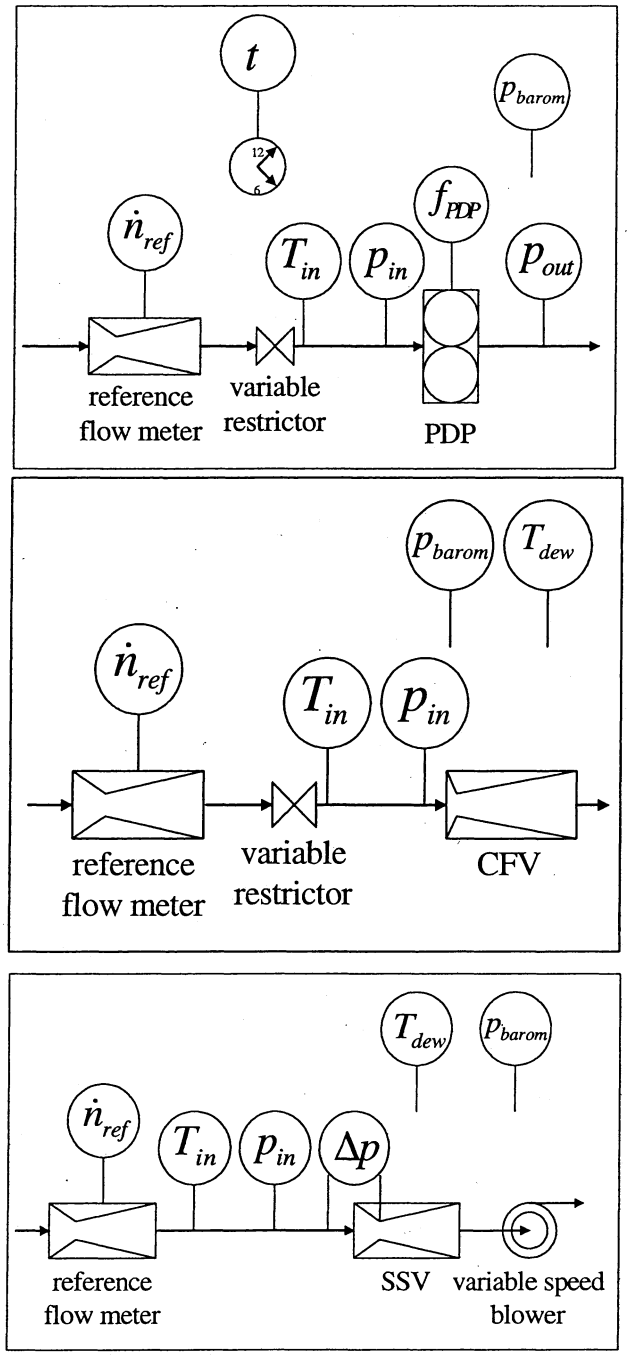

BILLING CODE 6560–50–C

§ 1065.341 CVS and batch sampler verification (propane check).

(a) A propane check serves as a CVS verification to determine if there is a discrepancy in measured values of diluted exhaust flow. A propane check also serves as a batch-sampler verification to determine if there is a discrepancy in a batch sampling system that extracts a sample from a CVS, as described in paragraph (g) of this section. Using good engineering judgment and safe practices, this check may be performed using a gas other than propane, such as CO_2 or CO. A failed propane check might indicate one or more problems that may require corrective action, as follows:

(1) *Incorrect analyzer calibration.* Re-calibrate, repair, or replace the FID analyzer.

(2) *Leaks.* Inspect CVS tunnel, connections, fasteners, and HC sampling system, and repair or replace components.

(3) *Poor mixing.* Perform the verification as described in this section while traversing a sampling probe across the tunnel's diameter, vertically and horizontally. If the analyzer response indicates any deviation exceeding ±2% of the mean measured concentration, consider operating the CVS at a higher flow rate or installing a mixing plate or orifice to improve mixing.

(4) *Hydrocarbon contamination in the sample system.* Perform the hydrocarbon-contamination verification as described in § 1065.520.

(5) *Change in CVS calibration.* Perform an in-situ calibration of the CVS flow meter as described in § 1065.340.

(6) *Other problems with the CVS or sampling verification hardware or software.*

Inspect the CVS system, CVS verification hardware, and software for discrepancies. (b) A propane check uses either a reference mass or a reference flow rate of C_3H_8 as a tracer gas in a CVS. Note that if you use a reference flow rate, account for any non-ideal gas behavior of C_3H_8 in the reference flow meter. Refer to § 1065.640 and § 1065.642, which describe how to calibrate and use certain flow meters. Do not use any ideal gas assumptions in § 1065.640 and § 1065.642. The propane check compares the calculated mass of injected C_3H_8 using HC measurements and CVS flow rate measurements with the reference value.

(c) Prepare for the propane check as follows:

(1) If you use a reference mass ofC_3H_8 instead of a reference flow rate, obtain a cylinder charged with C_3H_8. Determine the reference cylinder's mass of C_3H_8 within ±0.5% of the amount of C_3H_8 that you expect to use.

(2) Select appropriate flow rates for the CVS andC_3H_8.

(3) Select aC_3H_8 injection port in the CVS. Select the port location to be as close as practical to the location where you introduce engine exhaust into the CVS. Connect the C_3H_8 cylinder to the injection system.

(4) Operate and stabilize the CVS.

(5) Preheat or precool any heat exchangers in the sampling system.

(6) Allow heated and cooled components such as sample lines, filters, chillers, and pumps to stabilize at operating temperature.

(7) You may purge the HC sampling system during stabilization.

(8) If applicable, perform a vacuum side leak verification of the HC sampling system as described in § 1065.345.

(9) You may also conduct any other calibrations or verifications on equipment or analyzers.

(d) Zero, span, and verify contamination of the HC sampling system, as follows:

(1) Select the lowest HC analyzer range that can measure the C_3H_8 concentration expected for the CVS and C_3H_8 flow rates.

(2) Zero the HC analyzer using zero air introduced at the analyzer port.

(3) Span the HC analyzer using C_3H_8 span gas introduced at the analyzer port.

(4) Overflow zero air at the HC probe or into a fitting between the HC probe and the transfer line.

(5) Measure the stable HC concentration of the HC sampling system as overflow zero air flows. For batch HC measurement, fill the batch container (such as a bag) and measure the HC overflow concentration.

(6) If the overflow HC concentration exceeds 2 μmol/mol, do not proceed until contamination is eliminated. Determine the source of the contamination and take corrective action, such as cleaning the system or replacing contaminated portions.

(7) When the overflow HC concentration does not exceed 2 μmol/mol, record this value as x_{HCpre} and use it to correct for HC contamination as described in § 1065.660.

(e) Perform the propane check as follows:

(1) For batch HC sampling, connect clean storage media, such as evacuated bags.

(2) Operate HC measurement instruments according to the instrument manufacturer's instructions.

(3) If you will correct for dilution air background concentrations of HC, measure and record background HC in the dilution air.

(4) Zero any integrating devices.

(5) Begin sampling, and start any flow integrators.

(6) Release the contents of the C_3H_8 reference cylinder at the rate you selected. If you use a reference flow rate of C_3H_8, start integrating this flow rate.

(7) Continue to release the cylinder's contents until at least enough C_3H_8 has been released to ensure accurate quantification of the reference C_3H_8 and the measured C_3H_8.

(8) Shut off the C_3H_8 reference cylinder and continue sampling until you have accounted for time delays due to sample transport and analyzer response.

(9) Stop sampling and stop any integrators.

(f) Perform post-test procedure as follows:

(1) If you used batch sampling, analyze batch samples as soon as practical.

(2) After analyzing HC, correct for contamination and background.

(3) Calculate total C_3H_8 mass based on your CVS and HC data as described in § 1065.650 and § 1065.660, using the molar mass of C_3H_8, M_{C3H8}, instead the effective molar mass of HC, M_{HC}.

(4) If you use a reference mass, determine the cylinder's propane mass within ±0.5% and determine the C_3H_8 reference mass by subtracting the empty cylinder propane mass from the full cylinder propane mass.

(5) Subtract the reference C_3H_8 mass from the calculated mass. If this difference is within ±2.0 % of the reference mass, the CVS passes this verification. If not, take corrective action as described in paragraph (a) of this section.

(g) *Batch sampler verification.* You may repeat the propane check to verify a batch sampler, such as a PM secondary dilution system.

(1) Configure the HC sampling system to extract a sample near the location of the batch sampler's storage media (such as a PM filter). If the absolute pressure at this location is too low to extract an HC sample, you may sample HC from the batch sampler pump's exhaust. Use caution when sampling from pump exhaust because an otherwise acceptable pump leak downstream of a batch sampler flow meter will cause a false failure of the propane check.

(2) Repeat the propane check described in this section, but sample HC from the batch sampler.

(3) Calculate C_3H_8 mass, taking into account any secondary dilution from the batch sampler.

(4) Subtract the reference C_3H_8 mass from the calculated mass. If this difference is within ±5% of the reference mass, the batch sampler passes this verification. If not, take corrective action as described in paragraph (a) of this section.

§ 1065.345 Vacuum-side leak verification.

(a) *Scope and frequency.* Upon initial sampling system installation, after major maintenance, and before each test according to subpart F of this part for laboratory tests and according to subpart J of this part for field tests, verify that there are no significant vacuum-side leaks using one of the leak tests described in this section.

(b) *Measurement principles.* A leak may be detected either by measuring a small amount of flow when there should be zero flow, or by detecting the dilution of a known concentration of span gas when it flows through the vacuum side of a sampling system.

(c) *Low-flow leak test.* Test a sampling system for low-flow leaks as follows:

(1) Seal the probe end of the system by taking one of the following steps:

(i) Cap or plug the end of the sample probe.

(ii) Disconnect the transfer line at the probe and cap or plug the transfer line.

(iii) Close a leak-tight valve in-line between a probe and transfer line.

(2) Operate all vacuum pumps. After stabilizing, verify that the flow through

the vacuum-side of the sampling system is less than 0.5 % of the system's normal in-use flow rate. You may estimate typical analyzer and bypass flows as an approximation of the system's normal in-use flow rate.

(d) *Dilution-of-span-gas leak test.* Test any analyzer, other than a FID, for dilution of span gas as follows, noting that this configuration requires an overflow span gas system:

(1) Prepare a gas analyzer as you would for emission testing.

(2) Supply span gas to the analyzer port and verify that it measures the span gas concentration within its expected measurement accuracy and repeatability.

(3) Route overflow span gas to one of the following locations in the sampling system:

(i) The end of the sample probe.

(ii) Disconnect the transfer line at the probe connection, and overflow the span gas at the open end of the transfer line.

(iii) A three-way valve installed in-line between a probe and its transfer line, such as a system overflow zero and span port.

(4) Verify that the measured overflow span gas concentration is within the measurement accuracy and repeatability of the analyzer. A measured value lower than expected indicates a leak, but a value higher than expected may indicate a problem with the span gas or the analyzer itself. A measured value higher than expected does not indicate a leak.

CO and CO_2 Measurements

§ 1065.350 H_2O interference verification for CO_2 NDIR analyzers.

(a) *Scope and frequency.* If you measure CO_2 using an NDIR analyzer, verify the amount of H_2O interference after initial analyzer installation and after major maintenance.

(b) *Measurement principles.* H_2O can interfere with an NDIR analyzer's response to CO_2.

If the NDIR analyzer uses compensation algorithms that utilize measurements of other gases to meet this interference verification, simultaneously conduct these other measurements to test the compensation algorithms during the analyzer interference verification.

(c) *System requirements.* A CO_2 NDIR analyzer must have an H_2O interference that is within ±2% of the flow-weighted mean CO_2 concentration expected at the standard, though we strongly recommend a lower interference that is within ±1%.

(d) *Procedure.* Perform the interference verification as follows:

(1) Start, operate, zero, and span the CO_2 NDIR analyzer as you would before an emission test.

(2) Create a water-saturated test gas by bubbling zero air that meets the specifications in § 1065.750 through distilled water in a sealed vessel at (25 ± 10) °C.

(3) Introduce the water-saturated test gas upstream of any sample dryer, if one is used during testing.

(4) Allow time for the analyzer response to stabilize. Stabilization time may include time to purge the transfer line and to account for analyzer response.

(5) While the analyzer measures the sample's concentration, record 30 seconds of sampled data. Calculate the arithmetic mean of this data. The analyzer meets the interference verification if this value is within ±2% of the flow-weighted mean concentration of CO_2 expected at the standard.

(e) *Exceptions.* The following exceptions apply:

(1) You may omit this verification if you can show by engineering analysis that for your CO_2 sampling system and your emission-calculation procedures, the H_2O interference for your CO_2 NDIR analyzer always affects your brake-specific emission results within ±0.5% of each of the applicable standards.

(2) You may use a CO_2 NDIR analyzer that you determine does not meet this verification, as long as you try to correct the problem and the measurement deficiency does not adversely affect your ability to show that engines comply with all applicable emission standards.

§ 1065.355 H_2O and CO_2 interference verification for CO NDIR analyzers.

(a) *Scope and frequency.* If you measure CO using an NDIR analyzer, verify the amount of H_2O and CO_2 interference after initial analyzer installation and after major maintenance.

(b) *Measurement principles.* H_2O and CO_2 can positively interfere with an NDIR analyzer by causing a response similar to CO. If the NDIR analyzer uses compensation algorithms that utilize measurements of other gases to meet this interference verification, simultaneously conduct these other measurements to test the compensation algorithms during the analyzer interference verification.

(c) *System requirements.* A CO NDIR analyzer must have combined H_2O and CO_2 interference that is within ±2 % of the flow-weighted mean concentration of CO expected at the standard, though we strongly recommend a lower interference that is within ±1%.

(d) *Procedure.* Perform the interference verification as follows:

(1) Start, operate, zero, and span the CO NDIR analyzer as you would before an emission test.

(2) Create a water-saturated CO_2 test gas by bubbling a CO_2 span gas through distilled water in a sealed vessel at (25 ±10) °C.

(3) Introduce the water-saturated CO_2 test gas upstream of any sample dryer, if one is used during testing.

(4) Allow time for the analyzer response to stabilize. Stabilization time may include time to purge the transfer line and to account for analyzer response.

(5) While the analyzer measures the sample's concentration, record its output for 30 seconds. Calculate the arithmetic mean of this data.

(6) Multiply this mean value by the ratio of expected CO_2 to span gas CO_2 concentration. In other words, estimate the flow-weighted mean dry concentration of CO_2 expected during testing, and then divide this value by the concentration of CO_2 in the span gas used for this verification. Then multiply this ratio by the mean value recorded during this verification.

(7) The analyzer meets the interference verification if the result of paragraph (d)(6) of this section is within ±2 % of the flow-weighted mean concentration of CO expected at the standard.

(e) *Exceptions.* The following exceptions apply:

(1) You may omit this verification if you can show by engineering analysis that for your CO sampling system and your emission calculations procedures, the combined CO_2 and H_2O interference for your CO NDIR analyzer always affects your brake-specific CO emission results within ±0.5 % of the applicable CO standard.(2) You may use a CO NDIR analyzer that you determine does not meet this verification, as long as you try to correct the problem and the measurement deficiency does not adversely affect your ability to show that engines comply with all applicable emission standards.

Hydrocarbon Measurements

§ 1065.360 FID optimization and verification.

(a) *Scope and frequency.* For all FID analyzers perform the following steps:

(1) Calibrate a FID upon initial installation. Repeat the calibration as needed using good engineering judgment.

(2) Optimize a FID's response to various hydrocarbons after initial

analyzer installation and after major maintenance.

(3) Determine a FID's methane (CH_4) response factor after initial analyzer installation and after major maintenance.

(4) Verify methane (CH_4) response within 185 days before testing.

(b) *Calibration*. Use good engineering judgment to develop a calibration procedure, such as one based on the FID-analyzer manufacturer's instructions and recommended frequency for calibrating the FID. Alternately, you may remove system components for off-site calibration. Calibrate using C_3H_8 calibration gases that meet the specifications of § 1065.750. We recommend FID analyzer zero and span gases that contain approximately the flow-weighted mean concentration of O_2 expected during testing. If you use a FID to measure methane (CH_4) downstream of a nonmethane cutter, you may calibrate that FID using CH_4 calibration gases with the cutter. Regardless of the calibration gas composition, calibrate on a carbon number basis of one (C_1). For example, if you use a C_3H_8 span gas of concentration 200 μmol/mol, span the FID to respond with a value of 600 μmol/mol.

(c) *FID response optimization*. Use good engineering judgment for initial instrument start-up and basic operating adjustment using FID fuel and zero air. Heated FIDs must be within their required operating temperature ranges. Optimize FID response at the most common analyzer range expected during emission testing. Optimization involves adjusting flows and pressures of FID fuel, burner air, and sample to minimize response variations to various hydrocarbon species in the exhaust. Use good engineering judgment to trade off peak FID response to propane calibration gases to achieve minimal response variations to different hydrocarbon species. For an example of trading off response to propane for relative responses to other hydrocarbon species, see SAE 770141 (incorporated by reference in § 1065.1010). Determine the optimum flow rates for FID fuel, burner air, and sample and record them for future reference.

(d) *CH_4 response factor determination*. Since FID analyzers generally have a different response to CH_4 versus C3H8, determine each FID analyzer's CH_4 response factor, RF_{CH4}, after FID optimization. Use the most recent RF_{CH4} measured according to this section in the calculations for HC determination described in § 1065.660 to compensate for CH_4 response. Determine RF_{CH4} as follows, noting that you do not determine RF_{CH4} for FIDs that are calibrated and spanned using CH_4 with a nonmethane cutter:

(1) Select a C_3H_8 span gas that meets the specifications of § 1065.750. Record the C_3H_8 concentration of the gas.

(2) Select a CH_4 span gas that meets the specifications of § 1065.750. Record the CH_4 concentration of the gas.

(3) Start and operate the FID analyzer according to the manufacturer's instructions.

(4) Confirm that the FID analyzer has been calibrated using C_3H_8. Calibrate on a carbon number basis of one (C_1). For example, if you use a C_3H_8 span gas of concentration 200 μmol/mol, span the FID to respond with a value of 600 μmol/mol.

(5) Zero the FID with a zero gas that you use for emission testing.

(6) Span the FID with the C_3H_8 span gas that you selected under paragraph (d)(1) of this section.

(7) Introduce at the sample port of the FID analyzer, the CH_4 span gas that you selected under paragraph (d)(2) of this section.

(8) Allow time for the analyzer response to stabilize. Stabilization time may include time to purge the analyzer and to account for its response.

(9) While the analyzer measures the CH_4 concentration, record 30 seconds of sampled data. Calculate the arithmetic mean of these values.

(10) Divide the mean measured concentration by the recorded span concentration of the CH_4 calibration gas. The result is the FID analyzer's response factor for CH_4, RF_{CH4}.

(e) *FID methane (CH_4) response verification*. If the value of RF_{CH4} from paragraph (d) of this section is within ±5.0% of its most recent previously determined value, the FID passes the methane response verification. For example, if the most recent previous value for RF_{CH4} was 1.05 and it changed by +0.05 to become 1.10 or it changed by −0.05 to become 1.00, either case would be acceptable because +4.8% is less than +5.0%.

(1) Verify that the pressures and flow rates of FID fuel, burner air, and sample are each within ±0.5% of their most recent previously recorded values, as described in paragraph (c) of this section. You may adjust these flow rates as necessary. Determine a new RF_{CH4} as described in paragraph (d) of this section.

(2) If RF_{CH4} is still not within ±5.0% of its most recently determined value after adjusting flow rates, re-optimize the FID response as described in paragraph (c) of this section.

(3) Determine a new RF_{CH4} as described in paragraph (d) of this section. Use this new value of RF_{CH4} in the calculations for HC determination, as described in § 1065.660.

§ 1065.362 Non-stoichiometric raw exhaust FID O_2 interference verification.

(a) *Scope and frequency*. If you use FID analyzers for raw exhaust measurements from engines that operate in a non-stoichiometric mode of combustion (e.g., compression-ignition, lean-burn), verify the amount of FID O_2 interference upon initial installation and after major maintenance.

(b) *Measurement principles*. Changes in O_2 concentration in raw exhaust can affect FID response by changing FID flame temperature. Optimize FID fuel, burner air, and sample flow to meet this verification. Verify FID performance with the compensation algorithms for FID O_2 interference that you have active during an emission test.

(c) *System requirements*. Any FID analyzer used during testing must meet the FID O_2 interference verification according to the procedure in this section.

(d) *Procedure*. Determine FID O_2 interference as follows:

(1) Select two span reference gases that meet the specifications in § 1065.750 and contain C_3H_8 near 100% of span for HC. You may use CH_4 span reference gases for FIDs calibrated on CH_4 with a nonmethane cutter. Select the two balance gas concentrations such that the concentrations of O_2 and N_2 represent the minimum and maximum O_2 concentrations expected during testing.

(2) Confirm that the FID analyzer meets all the specifications of § 1065.360.

(3) Start and operate the FID analyzer as you would before an emission test. Regardless of the FID burner's air source during testing, use zero air as the FID burner's air source for this verification.

(4) Zero the FID analyzer using the zero gas used during emission testing.

(5) Span the FID analyzer using the span gas used during emission testing.

(6) Check the zero response of the FID analyzer using the zero gas used during emission testing. If the mean zero response of 30 seconds of sampled data is within ±0.5% of the span reference value used in paragraph (d)(5) of this section, then proceed to the next step; otherwise restart the procedure at paragraph (d)(4) of this section.

(7) Check the analyzer response using the span gas that has the minimum concentration of O_2 expected during testing. Record the mean response of 30 seconds of stabilized sample data as $x_{O2minHC}$.

(8) Check the zero response of the FID analyzer using the zero gas used during

emission testing. If the mean zero response of 30 seconds of stabilized sample data is within ±0.5% of the span reference value used in paragraph (d)(5) of this section, then proceed to the next step; otherwise restart the procedure at paragraph (d)(4) of this section.

(9) Check the analyzer response using the span gas that has the maximum concentration of O_2 expected during testing. Record the mean response of 30 seconds of stabilized sample data as $x_{O2maxHC}$.

(10) Check the zero response of the FID analyzer using the zero gas used during emission testing. If the mean zero response of 30 seconds of stabilized sample data is within ±0.5% of the span reference value used in paragraph (d)(5) of this section, then proceed to the next step; otherwise restart the procedure at paragraph (d)(4) of this section.

(11) Calculate the percent difference between $x_{O2maxHC}$ and its reference gas concentration. Calculate the percent difference between $x_{O2minHC}$ and its reference gas concentration. Determine the maximum percent difference of the two. This is the O_2 interference.

(12) If the O_2 interference is within ±1.5%, then the FID passes the O_2 interference check; otherwise perform one or more of the following to address the deficiency:

(i) Select zero and span gases for emission testing that contain higher or lower O_2 concentrations.

(ii) Adjust FID burner air, fuel, and sample flow rates. Note that if you adjust these flow rates to meet the O_2 interference verification, you must re-verify with the adjusted flow rates that the FID meets the CH_4 response factor verification according to § 1065.360.

(iii) Repair or replace the FID.

(iv) Demonstrate that the deficiency does not adversely affect your ability to demonstrate compliance with the applicable emission standards.

§ 1065.365 Nonmethane cutter penetration fractions.

(a) *Scope and frequency.* If you use a FID analyzer and a nonmethane cutter (NMC) to measure methane (CH_4), determine the nonmethane cutter's penetration fractions of methane, PF_{CH4}, and ethane, PF_{C2H6}. Perform this verification after installing the nonmethane cutter. Repeat this verification within 185 days of testing to verify that the catalytic activity of the cutter has not deteriorated. Note that because nonmethane cutters can deteriorate rapidly and without warning if they are operated outside of certain ranges of gas concentrations and outside of certain temperature ranges, good engineering judgment may dictate that you determine a nonmethane cutter's penetration fractions more frequently.

(b) *Measurement principles.* A nonmethane cutter is a heated catalyst that removes nonmethane hydrocarbons from the exhaust stream before the FID analyzer measures the remaining hydrocarbon concentration. An ideal nonmethane cutter would have PF_{CH4} of 1.000, and the penetration fraction for all other hydrocarbons would be 0.000, as represented by PF_{C2H6}. The emission calculations in § 1065.660 use this section's measured values of PF_{CH4} and PF_{C2H6} to account for less than ideal NMC performance.

(c) *System requirements.* We do not limit NMC penetration fractions to a certain range. However, we recommend that you optimize a nonmethane cutter by adjusting its temperature to achieve $PF_{CH4} > 0.95$ and $PF_{C2H6} < 0.02$ as determined by paragraphs (d) and (e) of this section, as applicable. If we use a nonmethane cutter for testing, it will meet this recommendation. If adjusting NMC temperature does not result in achieving both of these specifications simultaneously, we recommend that you replace the catalyst material.

Use the most recently determined penetration values from this section to calculate HC emissions according to § 1065.660 and § 1065.665 as applicable.

(d) *Procedure for a FID calibrated with the NMC.* If your FID arrangement is such that a FID is always calibrated to measure CH_4 with the NMC, then span that FID with the NMC cutter using a CH_4 span gas, set that FID's CH_4 penetration fraction, PF_{CH4}, equal to 1.0 for all emission calculations, and determine its ethane (C_2H_6) penetration fraction, PF_{C2H6}. as follows:

(1) Select a CH_4 gas mixture and a C_2H_6 analytical gas mixture and ensure that both mixtures meet the specifications of § 1065.750. Select a CH_4 concentration that you would use for spanning the FID during emission testing and select a C_2H_6 concentration that is typical of the peak NMHC concentration expected at the hydrocarbon standard or equal to THC analyzer's span value.

(2) Start, operate, and optimize the nonmethane cutter according to the manufacturer's instructions, including any temperature optimization.

(3) Confirm that the FID analyzer meets all the specifications of § 1065.360.

(4) Start and operate the FID analyzer according to the manufacturer's instructions.

(5) Zero and span the FID with the cutter and use CH_4 span gas to span the FID with the cutter. Note that you must span the FID on a C_1 basis. For example, if your span gas has a CH_4 reference value of 100 μ/mol, the correct FID response to that span gas is 100 μ/mol because there is one carbon atom per CH_4 molecule.

(6) Introduce the C_2H_6 analytical gas mixture upstream of the nonmethane cutter.

(7) Allow time for the analyzer response to stabilize. Stabilization time may include time to purge the nonmethane cutter and to account for the analyzer's response.

(8) While the analyzer measures a stable concentration, record 30 seconds of sampled data. Calculate the arithmetic mean of these data points.

(9) Divide the mean by the reference value of C_2H_6, converted to a C_1 basis. The result is the C_2H_6 penetration fraction, PF_{C2H6}. Use this penetration fraction and the CH_4 penetration fraction, which is set equal to 1.0, in emission calculations according to § 1065.660 or § 1065.665, as applicable.

(e) *Procedure for a FID calibrated by bypassing the NMC.* If you use a FID with an NMC that is calibrated by bypassing the NMC, determine penetration fractions as follows:

(1) Select CH_4 and C_2H_6 analytical gas mixtures that meet the specifications of § 1065.750 with the CH_4 concentration typical of its peak concentration expected at the hydrocarbon standard and the C_2H_6 concentration typical of the peak total hydrocarbon (THC) concentration expected at the hydrocarbon standard or the THC analyzer span value.

(2) Start and operate the nonmethane cutter according to the manufacturer's instructions, including any temperature optimization.

(3) Confirm that the FID analyzer meets all the specifications of § 1065.360.

(4) Start and operate the FID analyzer according to the manufacturer's instructions.

(5) Zero and span the FID as you would during emission testing. Span the FID by bypassing the cutter and by using C_3H_8 span gas to span the FID. Note that you must span the FID on a C_1 basis. For example, if your span gas has a propane reference value of 100 μ/mol, the correct FID response to that span gas is 300 μ/mol because there are three carbon atoms per C_3H_8 molecule.

(6) Introduce the C_2H_6 analytical gas mixture upstream of the nonmethane cutter.

(7) Allow time for the analyzer response to stabilize. Stabilization time may include time to purge the nonmethane cutter and to account for the analyzer's response.

(8) While the analyzer measures a stable concentration, record 30 seconds of sampled data. Calculate the arithmetic mean of these data points.

(9) Reroute the flow path to bypass the nonmethane cutter, introduce the C_2H_6 analytical gas mixture to the bypass, and repeat the steps in paragraphs (e)(7) through (8) of this section.

(10) Divide the mean C_2H_6 concentration measured through the nonmethane cutter by the mean concentration measured after bypassing the nonmethane cutter. The result is the C_2H_6 penetration fraction, PF_{C2H6}. Use this penetration fraction according to § 1065.660 or § 1065.665, as applicable.

(11) Repeat the steps in paragraphs (e)(6) through (10) of this section, but with the CH_4 analytical gas mixture instead of C_2H_6. The result will be the CH_4 penetration fraction, PF_{CH4}. Use this penetration fraction according to § 1065.660 or § 1065.665, as applicable.

No$_X$ Measurements

§ 1065.370 CLD CO_2 and H_2O quench verification.

(a) *Scope and frequency.* If you use a CLD analyzer to measure NO_X, verify the amount of H_2O and CO_2 quench after installing the CLD analyzer and after major maintenance.

(b) *Measurement principles.* H_2O and CO_2 can negatively interfere with a CLD's NO_X response by collisional quenching, which inhibits the chemiluminescent reaction that a CLD utilizes to detect NO_X. The calculations in § 1065.672 for H_2O quench account for the water vapor in humidified NO span gas. The procedure and the calculations scale the quench results to the water vapor and CO_2 concentrations expected during testing. If the CLD analyzer uses quench compensation algorithms that utilize H_2O and/or CO_2 measurement instruments, use these instruments to measure H_2O and/or CO_2 and evaluate quench with the compensation algorithms applied.

(c) *System requirements.* A CLD analyzer must have a combined H_2O and CO_2 quench of ±2% or less, though we strongly recommend a quench of ±1% or less. Combined quench is the sum of the CO_2 quench determined as described in paragraph (d) of this section, plus the H_2O quench determined in paragraph (e) of this section.

(d) *CO_2 quench verification procedure.* Use the following method to determine CO_2 quench, or use good engineering judgment to develop a different protocol:

(1) Use PTFE tubing to make necessary connections.

(2) Connect a pressure-regulated CO_2 span gas to one of the inlets of a three-way valve made of 300 series stainless steel. Use a CO_2 span gas that meets the specifications of § 1065.750 and attempt to use a concentration that is approximately twice the maximum CO_2 concentration expected to enter the CLD sample port during testing, if available.

(3) Connect a pressure-regulated purified N_2 gas to the valve's other inlet. Use a purified N_2 gas that meets the specifications of § 1065.750.

(4) Connect the valve's single outlet to the balance-gas port of a gas divider that meets the specifications in § 1065.248.

(5) Connect a pressure-regulated NO span gas to the span-port of the gas divider. Use an NO span gas that meets the specifications of § 1065.750. Attempt to use an NO concentration that is approximately twice the maximum NO concentration expected during testing, if available.

(6) Configure the gas divider such that nearly equal amounts of the span gas and balance gas are blended with each other. Apply viscosity corrections as necessary to appropriately ensure correct gas division.

(7) While flowing balance and span gases through the gas divider, stabilize the CO_2 concentration downstream of the gas divider and measure the CO_2 concentration with an NDIR analyzer that has been prepared for emission testing. Record this concentration, $X_{CO2meas}$, and use it in the quench verification calculations in § 1065.675.

(8) Measure the NO concentration downstream of the gas divider. If the CLD has an operating mode in which it detects NO-only, as opposed to total NO_X, operate the CLD in the NO-only operating mode. Record this concentration, $X_{NO,CO2}$, and use it in the quench verification calculations in § 1065.675.

(9) Switch the three-way valve so 100% purified N_2 flows to the gas divider's balance-port inlet. Monitor the CO_2 at the gas divider's outlet until its concentration stabilizes at zero.

(10) Measure NO concentration at the gas divider's outlet. Record this value, $X_{NO,N2}$, and use it in the quench verification calculations in § 1065.675.

(11) Use the values recorded according to this paragraph (d) of this section and paragraph (e) of this section to calculate quench as described in § 1065.675.

(e) *H_2O quench verification procedure.* Use the following method to determine H_2O quench, or use good engineering judgment to develop a different protocol:

(1) Use PTFE tubing to make necessary connections.

(2) If the CLD has an operating mode in which it detects NO-only, as opposed to total NO_X, operate the CLD in the NO-only operating mode.

(3) Measure an NO calibration span gas that meets the specifications of § 1065.750 and is near the maximum concentration expected during testing. Record this concentration, X_{NOdry}.

(4) Humidify the gas by bubbling it through distilled water in a sealed vessel. We recommend that you humidify the gas to the highest sample dewpoint that you estimate during emission sampling. Regardless of the humidity during this test, the quench verification calculations in § 1065.675 scale the recorded quench to the highest dewpoint that you expect entering the CLD sample port during emission sampling.

(5) If you do not use any sample dryer for NO_X during emissions testing, record the vessel water temperature as T_{dew}, and its pressure as p_{total} and use these values according to § 1065.645 to calculate the amount of water entering the CLD sample port, $X_{H2Omeas}$. If you do use a sample dryer for NO_X during emissions testing, measure the humidity of the sample just upstream of the CLD sample port and use the measured humidity according to § 1065.645 to calculate the amount of water entering the CLD sample port, $X_{H2Omeas}$.

(6) To prevent subsequent condensation, make sure that any humidified sample will not be exposed to temperatures lower than T_{dew} during transport from the sealed vessel's outlet to the CLD. We recommend using heated transfer lines.

(7) Introduce the humidified sample upstream of any sample dryer, if one is used.

(8) Use the CLD to measure the NO concentration of the humidified span gas and record this value, X_{NOwet}.

(9) Use the recorded values from this paragraph (e) to calculate the quench as described in § 1065.675.

(10) Use the values recorded according to this paragraph (e) of this section and paragraph (d) of this section to calculate quench as described in § 1065.675.

(f) *Corrective action.* If the sum of the H_2O quench plus the CO_2 quench is not within ±2%, take corrective action by repairing or replacing the analyzer. Before using a CLD for emission testing, demonstrate that the corrective action resulted in a value within ±2% combined quench.

(g) *Exceptions.* The following exceptions apply:

(1) You may omit this verification if you can show by engineering analysis that for your NO_X sampling system and

your emission calculations procedures, the the combined CO_2 and H_2O interference for your NO_X CLD analyzer always affects your brake-specific NO_X emission results within no more than ±1.0% of the applicable NO_X standard.

(2) You may use a NO_X CLD analyzer that you determine does not meet this verification, as long as you try to correct the problem and the measurement deficiency does not adversely affect your ability to show that engines comply with all applicable emission standards.

§ 1065.372 NDUV analyzer HC and H_2O interference verification.

(a) *Scope and frequency.* If you measure NO_X using an NDUV analyzer, verify the amount of H_2O and hydrocarbon interference after initial analyzer installation and after major maintenance.

(b) *Measurement principles.* Hydrocarbons and H_2O can positively interfere with an NDUV analyzer by causing a response similar to NO_X. If the NDUV analyzer uses compensation algorithms that utilize measurements of other gases to meet this interference verification, simultaneously conduct such measurements to test the algorithms during the analyzer interference verification.

(c) *System requirements.* A NO_X NDUV analyzer must have combined H_2O and HC interference within ±2% of the flow-weighted mean concentration of NO_X expected at the standard, though we strongly recommend keeping interference within ±1%.

(d) *Procedure.* Perform the interference verification as follows:

(1) Start, operate, zero, and span the NO_X NDUV analyzer according to the instrument manufacturer's instructions.

(2) We recommend that you extract engine exhaust to perform this verification. Use a CLD that meets the specifications of subpart C of this part to quantify NO_X in the exhaust. Use the CLD response as the reference value. Also measure HC in the exhaust with a FID analyzer that meets the specifications of subpart C of this part. Use the FID response as the reference hydrocarbon value.

(3) Upstream of any sample dryer, if one is used during testing, introduce the engine exhaust to the NDUV analyzer.

(4) Allow time for the analyzer response to stabilize. Stabilization time may include time to purge the transfer line and to account for analyzer response.

(5) While all analyzers measure the sample's concentration, record 30 seconds of sampled data, and calculate the arithmetic means for the three analyzers.

(6) Subtract the CLD mean from the NDUV mean.

(7) Multiply this difference by the ratio of the flow-weighted mean HC concentration expected at the standard to the HC concentration measured during the verification. The analyzer meets the interference verification of this section if this result is within ±2% of the HC concentration expected at the standard.

(e) *Exceptions.* The following exceptions apply:

(1) You may omit this verification if you can show by engineering analysis that for your NO_X sampling system and your emission calculations procedures, the the combined HC and H_2O interference for your NO_X NDUV analyzer always affects your brake-specific NO_X emission results by less than 0.5% of the applicable NO_X standard.

(2) You may use a NO_X NDUV analyzer that you determine does not meet this verification, as long as you try to correct the problem and the measurement deficiency does not adversely affect your ability to show that engines comply with all applicable emission standards.

§ 1065.376 Chiller NO_2 penetration.

(a) *Scope and frequency.* If you use a chiller to dry a sample upstream of a NO_X measurement instrument, but you don't use an NO_2-to-NO converter upstream of the chiller, you must perform this verification for chller NO_2 penetration. Perform this verification after initial installation and after major maintenance.

(b) *Measurement principles.* A chiller removes water, which can otherwise interfere with a NO_X measurement. However, liquid water in an improperly designed chiller can remove NO_2 from the sample. If a chiller is used without an NO_2-to-NO converter upstream, it could therefore remove NO_2 from the sample prior NO_X measurement.

(c) *System requirements.* A chiller must allow for measuring at least 95% of the total NO_2 at the maximum expected concentration of NO_2.

(d) *Procedure.* Use the following procedure to verify chiller performance:

(1) *Instrument setup.* Follow the analyzer and chiller manufacturers' start-up and operating instructions. Adjust the analyzer and chiller as needed to optimize performance.

(2) *Equipment setup.* Connect an ozonator's inlet to a zero-air or oxygen source and connect its outlet to one port of a three-way tee fitting. Connect an NO span gas to another port of the tee. Connect a heated line at 100 °C to the last port, and connect a heated three-way tee to the other end of the line. Connect a dewpoint generator, set at a dewpoint of 50 °C, to one end of a heated line at 100 °C. Connect the other end of the line to the heated tee and connect a third 100 °C heated line to the chiller inlet. Provide an overflow vent line at the chiller inlet.

(3) *Adjustments.* For the following adjustment steps, set the analyzer to measure only NO (*i.e.*, NO mode), or only read the NO channel of the analyzer:

(i) With the dewpoint generator and the ozonator off, adjust the NO and zero-gas flows so the NO concentration at the analyzer is at least two times the peak total NO_X concentration expected during testing at the standard. Verify that gas is flowing out of the overflow vent line.

(ii) Turn on the dewpoint generator and adjust its flow so the NO concentration at the analyzer is at least at the peak total NO_X concentration expected during testing at the standard. Verify that gas is flowing out of the overflow vent line.

(iii) Turn on the ozonator and adjust the ozonator so the NO concentration measured by the analyzer decreases by the same amount as the maximum concentration of NO_2 expected during testing. This ensures that the ozonator is generating NO_2 at the maximum concentration expected during testing.

(4) *Data collection.* Maintain the ozonator adjustment in paragraph (d)(3) of this section, and keep the NO_X analyzer in the NO only mode or only read the NO channel of the analyzer.

(i) Allow for stabilization, accounting only for transport delays and instrument response.

(ii) Calculate the mean of 30 seconds of sampled data from the analyzer and record this value as NO_{ref}.

(iii) Switch the analyzer to the total NO_X mode, (that is, sum the NO and NO_2 channels of the analyzer) and allow for stabilization, accounting only for transport delays and instrument response.

(iv) Calculate the mean of 30 seconds of sampled data from the analyzer and record this value as NOx_{meas}.

(v) Turn off the ozonator and allow for stabilization, accounting only for transport delays and instrument response.

(vi) Calculate the mean of 30 seconds of sampled data from the analyzer and record this value as NO_{xref}.

(5) *Performance evaluation.* Divide the quantity of ($NO_{xmeas} - NO_{ref}$) by the quantity of ($NO_{xref} - NO_{ref}$). If the result

is less than 95%, repair or replace the chiller.

(e) *Exceptions.* The following exceptions apply:

(1) You may omit this verification if you can show by engineering analysis that for your NO_X sampling system and your emission calculations procedures, the the chiller always affects your brake-specific NO_X emission results by less than 0.5% of the applicable NO_X standard.

(2) You may use a chiller that you determine does not meet this verification, as long as you try to correct the problem and the measurement deficiency does not adversely affect your ability to show that engines comply with all applicable emission standards.

§ 1065.378 NO_2-to-NO converter conversion verification.

(a) *Scope and frequency.* If you use an analyzer that measures only NO to determine NO_X, you must use an NO_2-to-NO converter upstream of the analyzer. Perform this verification after installing the converter, after major maintenance and within 35 days before an emission test. This verification must be repeated at this frequency to verify that the catalytic activity of the NO_2-to-NO converter has not deteriorated.

(b) *Measurement principles.* An NO_2-to-NO converter allows an analyzer that measures only NO to determine total NO_X by converting the NO_2 in exhaust to NO.

(c) *System requirements.* An NO_2-to-NO converter must allow for measuring at least 95% of the total NO_2 at the maximum expected concentration of NO_2.

(d) *Procedure.* Use the following procedure to verify the performance of a NO_2-to-NO converter:

(1) *Instrument setup.* Follow the analyzer and NO_2-to-NO converter manufacturers' start-up and operating instructions. Adjust the analyzer and converter as needed to optimize performance.

(2) *Equipment setup.* Connect an ozonator's inlet to a zero-air or oxygen source and connect its outlet to one port of a 4-way cross fitting. Connect an NO span gas to another port. Connect the NO_2-to-NO converter inlet to another port, and connect an overflow vent line to the last port.

(3) *Adjustments.* Take the following steps to make adjustments:

(i) With the NO_2-to-NO converter in the bypass mode (*i.e.*, NO mode) and the ozonator off, adjust the NO and zero-gas flows so the NO concentration at the analyzer is at the peak total NO_X concentration expected during testing. Verify that gas is flowing out of the overflow vent.

(ii) With the NO_2-to-NO converter still in the bypass mode, turn on the ozonator and adjust the ozonator so the NO concentration measured by the analyzer decreases by the same amount as maximum concentration of NO_2 expected during testing. This ensures that the ozonator is generating NO_2 at the maximum concentration expected during testing.

(4) *Data collection.* Maintain the ozonator adjustment in paragraph (d)(3) of this section, and keep the NO_X analyzer in the NO only mode (*i.e.*, bypass the NO_2-to-NO converter).

(i) Allow for stabilization, accounting only for transport delays and instrument response.

(ii) Calculate the mean of 30 seconds of sampled data from the analyzer and record this value as NO_{ref}.

(iii) Switch the analyzer to the total NO_X mode (that is, sample with the NO_2-to-NO converter) and allow for stabilization, accounting only for transport delays and instrument response.

(iv) Calculate the mean of 30 seconds of sampled data from the analyzer and record this value as NO_{xmeas}.

(v) Turn off the ozonator and allow for stabilization, accounting only for transport delays and instrument response.

(vi) Calculate the mean of 30 seconds of sampled data from the analyzer and record this value as NO_{xref}.

(5) *Performance evaluation.* Divide the quantityof ($NO_{xmeas} - NO_{ref}$)by the quantity of ($NO_{xref} - NO_{ref}$). If the result is less than 95%, repair or replace the NO_2-to-NO converter.

(e) *Exceptions.* The following exceptions apply:

(1) You may omit this verification if you can show by engineering analysis that for your NO_x sampling system and your emission calculations procedures, the converter always affects your brake-specific NO_x emission results by less than 0.5% of the applicable NO_x standard.

(2) You may use a converter that you determine does not meet this verification, as long as you try to correct the problem and the measurement deficiency does not adversely affect your ability to show that engines comply with all applicable emission standards.

PM Measurements

§ 1065.390 PM balance verifications and weighing process verification.

(a) *Scope and frequency.* This section describes three verifications. The first verification requires an independent verification of PM balance performance, and this must be performed within 370 days before emission testing. The second verification requires zeroing and spanning the balance, and this must be performed within 12 h before weighing. The third verification requires comparing a current mass determination of pooled reference samples with the previous mass determination of the pooled reference samples. This verification must be performed within 12 h before weighing.

(b) *Independent verification.* Have the balance manufacturer (or a representative approved by the balance manufacturer) verify the balance performance within 370 days of testing.

(c) *Zeroing and spanning.* You must verify balance performance by zeroing and spanning it with at least one calibration weight, and any weights you use must that meet the specifications in § 1065.790 to perform this verification.

(1) Use a manual procedure in which you zero the balance and span the balance with at least one calibration weight. If you normally use mean values by repeating the weighing process to improve the accuracy and precision of PM measurements, use the same process to verify balance performance.

(2) You may use an automated procedure to verify balance performance. For example many balances have internal calibration weights that are used automatically to verify balance performance. Note that if you use internal balance weights, the weights must meet the specifications in § 1065.790 to perform this verification.

(d) *Reference sample weighing.* You must also verify the PM-weighing environment and weighing process by weighing reference PM sample media. Repeated weighing of a reference mass must return the same value within ±10 μg or ±10% of the net PM mass expected at the standard (if known), whichever is higher. Perform this verification as follows:

(1) Keep at least two samples of unused PM sample media in the PM-stabilization environment. Use these as references. If you collect PM with filters, select unused filters of the same material and size for use as references. You may periodically replace references, using good engineering judgment.

(2) Stabilize references in the PM stabilization environment. Consider references stabilized if they have been in the PM-stabilization environment for a minimum of 30 min, and the PM-stabilization environment has been within the specifications of

§ 1065.190(d) for at least the preceding 60 min.

(3) Exercise the balance several times with a reference sample. We recommend weighing ten samples without recording the values.

(4) Zero and span the balance.

(5) Weigh each of the reference samples and record their masses. We recommend using substitution weighing as described in § 1065.590(j). If you normally use mean values by repeating the weighing process to improve the accuracy and precision of PM measurements, use the same process to measure reference masses.

(6) Record the balance environment dewpoint, ambient temperature, and atmospheric pressure.

(7) Use the recorded ambient conditions to correct results for buoyancy as described in § 1065.690. Record the buoyancy-corrected mass of each of the references.

(8) Subtract each of the reference's buoyancy-corrected masses from the most recent previous determinations of their masses.

(9) If the mean of the reference's masses changes by more than that allowed under paragraph (d) of this section, then invalidate all PM results that were determined between the two times that the reference masses were determined.

§ 1065.395 Inertial PM balance verifications.

This section describes how to verify the performance of an inertial PM balance.

(a) *Independent verification.* Have the balance manufacturer (or a representative approved by the balance manufacturer) verify the inertial balance performance within 370 days before testing.

(b) *Other verifications.* Perform other verifications using good engineering judgment and instrument manufacturer recommendations.

Subpart E—Engine Selection, Preparation, and Maintenance

§ 1065.401 Test engine selection.

While all engine configurations within a certified engine family must comply with the applicable standards in the standard-setting part, you need not test each configuration for certification.

(a) Select an engine configuration within the engine family for testing, as follows:

(1) Test the engine that we specify, whether we issue general guidance or give you specific instructions.

(2) If we do not tell you which engine to test, follow any instructions in the standard-setting part.

(3) If we do not tell you which engine to test and the standard-setting part does not include specifications for selecting test engines, use good engineering judgment to select the engine configuration within the engine family that is most likely to exceed an emission standard.

(b) In the absence of other information, the following characteristics are appropriate to consider when selecting the engine to test:

(1) Maximum fueling rates.

(2) Maximum loads.

(3) Maximum in-use speeds.

(4) Highest sales volume.

(c) For our testing, we may select any engine configuration within the engine family.

§ 1065.405 Test engine preparation and maintenance.

(a) If you are testing an emission-data engine for certification, make sure it is built to represent production engines. This includes governors that you normally install on production engines. If you do not install governors on production engines, simulate a governor that is representative of a governor that others will install on your production engines.

(b) Run the test engine, with all emission-control systems operating, long enough to stabilize emission levels. Unless otherwise specified in the standard-setting part, you may consider emission levels stable without measurement if you accumulate 12 h of operation for a spark-ignition engine or 125 h for a compression-ignition engine. If the engine needs more or less operation to stabilize emission levels, record your reasons and the methods for doing this, and give us these records if we ask for them. To ensure consistency between low-hour engines and deterioration factors, you must use the same stabilization procedures for all emission-data engines within an engine family.

(c) Record any maintenance, modifications, parts changes, diagnostic or emissions testing and document the need for each event. You must provide this information if we request it.

(d) For accumulating operating hours on your test engines, select engine operation that represents normal in-use operation for the engine family.

(e) If your engine will be used in a vehicle equipped with a canister for storing evaporative hydrocarbons for eventual combustion in the engine, attach a canister to the engine before running an emission test. You may request to omit using an evaporative canister during testing if you can show that it would not affect your ability to show compliance with the applicable emission standards. You do not have to accumulate engine operation before emission testing with an installed canister. Prior to an emission test, use the following steps to attach a canister to your engine:

(1) Use a canister and plumbing arrangement that represents the in-use configuration of the largest capacity canister in all expected applications.

(2) Use a canister that is fully loaded with fuel vapors.

(3) Connect the canister's purge port to the engine.

(4) Plug the canister port that is normally connected to the fuel tank.

§ 1065.410 Maintenance limits for stabilized test engines.

(a) After you stabilize the test engine's emission levels, you may do maintenance as allowed by the standard-setting part. However, you may not do any maintenance based on emission measurements from the test engine (*i.e.*, unscheduled maintenance).

(b) For any critical emission-related maintenance—other than what we specifically allow in the standard-setting part—you must completely test an engine for emissions before and after doing any maintenance that might affect emissions, unless we waive this requirement.

(c) Keep a record of the inspection and update your application to document any changes as a result of the inspection. You may use equipment, instruments, or tools to identify bad engine components. Any equipment, instruments, or tools used for scheduled maintenance on emission data engines must be available to dealerships and other service outlets.

(d) You may adjust or repair an emission-data engine as long as you document these changes in your application.

(e) If we determine that a part failure, system malfunction, or associated repairs have made the engine's emission controls unrepresentative of production engines, you may no longer use it as an emission-data. Also, if your test engine has a major mechanical failure that requires you to take it apart, you may no longer use it as an emission-data engine.

§ 1065.415 Durability demonstration.

If the standard-setting part requires durability testing, you must accumulate service in a way that represents how you expect the engine to operate in use. You may accumulate service hours using an accelerated schedule, such as through continuous operation or by using duty cycles that are more aggressive than in-use operation.

(a) *Maintenance.* The following limits apply to the maintenance that we allow you to do on an emission-data engine:

(1) You may perform scheduled maintenance that you recommend to operators, but only if it is consistent with the standard-setting part's restrictions.

(2) You may perform additional maintenance only as specified in § 1065.410 or allowed by the standard-setting part.

(3) We may approve additional maintenance to your durability engine if all the following occur:

(i) Something clearly malfunctions—such as persistent misfire, engine stall, overheating, fluid leaks, or loss of oil pressure—and needs maintenance or repair.

(ii) You provide us an opportunity to verify the extent of the malfunction before you do the maintenance.

(b) *Emission measurements.* Perform emission tests following the provisions of the standard setting part and this part, as applicable. Perform emission tests to determine deterioration factors consistent with good engineering judgment. Evenly space any tests between the first and last test points throughout the durability period, unless we approve otherwise.

Subpart F—Performing an Emission Test in the Laboratory

§ 1065.501 Overview.

(a) Use the procedures detailed in this subpart to measure engine emissions in a laboratory setting. This section describes how to:

(1) Map your engine by recording specified speed and torque data, as measured from the engine's primary output shaft.

(2) Transform normalized duty cycles into reference duty cycles for your engine by using an engine map.

(3) Prepare your engine, equipment, and measurement instruments for an emission test.

(4) Perform pre-test procedures to verify proper operation of certain equipment and analyzers.

(5) Record pre-test data.

(6) Start or restart the engine and sampling systems.

(7) Sample emissions throughout the duty cycle.

(8) Record post-test data.

(9) Perform post-test procedures to verify proper operation of certain equipment and analyzers.

(10) Weigh PM samples.

(b) A laboratory emission test generally consists of measuring emissions and other parameters while an engine follows one or more duty cycles that are specified in the standard-setting part. There are two general types of duty cycles:

(1) *Transient cycles.* Transient duty cycles are typically specified in the standard-setting part as a second-by-second sequence of speed commands and torque (or power) commands. Operate an engine over a transient cycle such that the speed and torque of the engine's primary output shaft follows the target values. Proportionally sample emissions and other parameters and use the calculations in subpart G of this part to calculate emissions. Start a transient test according to the standard-setting part, as follows:

(i) A cold-start transient cycle where you start to measure emissions just before starting a cold engine.

(ii) A hot-start transient cycle where you start to measure emissions just before starting a warmed-up engine.

(iii) A hot running transient cycle where you start to measure emissions after an engine is started, warmed up, and running.

(2) *Steady-state cycles.* Steady-state duty cycles are typically specified in the standard-setting part as a list of discrete operating points (modes), where each operating point has one value of a speed command and one value of a torque (or power) command. Ramped-modal cycles for steady-state testing also list test times for each mode and ramps of speed and torque to follow between modes. Start a steady-state cycle as a hot running test, where you start to measure emissions after an engine is started, warmed up and running. You may run a steady-state duty cycle as a discrete-mode cycle or a ramped-modal cycle, as follows:

(i) *Discrete-mode cycles.* Before emission sampling, stabilize an engine at the first discrete mode. Sample emissions and other parameters for that mode and then stop emission sampling. Record mean values for that mode, and then stabilize the engine at the next mode. Continue to sample each mode discretely and calculate weighted emission results according to the standard-setting part.

(ii) *Ramped-modal cycles.* Perform ramped-modal cycles similar to the way you would perform transient cycles, except that ramped-modal cycles involve mostly steady-state engine operation. Perform a ramped-modal cycle as a sequence of second-by-second speed commands and torque (or power) commands.Proportionally sample emissions and other parameters during the cycle and use the calculations in subpart G of this part to calculate emissions.

(c) Other subparts in this part identify how to select and prepare an engine for testing (subpart E), how to perform the required engine service accumulation (subpart E), and how to calculate emission results (subpart G).

(d) Subpart J of this part describes how to perform field testing.

§ 1065.510 Engine mapping.

(a) *Scope and frequency.* An engine map is a data set that consists of a series of paired data points that represent the maximum brake torque versus engine speed, measured at the engine's primary output shaft. Map your engine while it is connected to a dynamometer. Configure any auxiliary work inputs and outputs such as hybrid, turbo-compounding, or thermoelectric systems to represent their in-use configurations, and use the same configuration for emission testing. See Figure 1 of § 1065.210. This may involve configuring initial states of charge and rates and times of auxiliary-work inputs and outputs. We recommend that you contact the Designated Compliance Officer before testing to determine how you should configure any auxiliary-work inputs and outputs. Use the most recent engine map to transform a normalized duty cycle from the standard-setting part to a reference duty cycle specific to your engine. Normalized duty cycles are specified in the standard-setting part. You may update an engine map at any time by repeating the engine-mapping procedure. You must map or re-map an engine before a test if any of the following apply:

(1) If you have not performed an initial engine map.

(2) If the atmospheric pressure near the engine's air inlet is not within ±5 kPa of the atmospheric pressure recorded at the time of the last engine map.

(3) If the engine or emission-control system has undergone changes that might affect maximum torque performance. This includes changing the configuration of auxiliary work inputs and outputs.

(4) If you capture an incomplete map on your first attempt or you do not complete a map within the specified time tolerance. You may repeat mapping as often as necessary to capture a complete map within the specified time.

(b) *Mapping variable-speed engines.* Map variable-speed engines as follows:

(1) Record the atmospheric pressure.

(2) Warm up the engine by operating it. We recommend operating the engine at any speed and at approximately 75% of the its expected maximum power. Continue the warm-up until either the

engine coolant, block, or head absolute temperature is within ±2% of its mean value for at least 2 min or until the engine thermostat controls engine temperature.

(3) Operate the engine at its warm idle speed.

(4) Set operator demand to maximum and control engine speed at (95 ±1)% of its warm idle speed for at least 15 seconds. For engines with reference duty cycles whose lowest speed is greater than warm idle speed, you may start the map at (95 ±1)% of the lowest reference speed.

(5) Perform one of the following:

(i) For any engine subject only to steady-state duty cycles (*i.e.*, discrete-mode or ramped-modal), you may perform an engine map by using discrete speeds. Select at least 20 evenly spaced setpoints between warm idle and the highest speed above maximum mapped power at which (50 to 75)% of maximum power occurs. If this highest speed is unsafe or unrepresentative (e.g, for ungoverned engines), use good engineering judgment to map up to the maximum safe speed or the maximum representative speed. At each setpoint, stabilize speed and allow torque to stabilize. Record the mean speed and torque at each setpoint. We recommend that you stabilize an engine for at least 15 seconds at each setpoint and record the mean feedback speed and torque of the last (4 to 6) seconds. Use linear interpolation to determine intermediate speeds and torques. Use this series of speeds and torques to generate the power map as described in paragraph (e) of this section.

(ii) For any variable-speed engine, you may perform an engine map by using a continuous sweep of speed by continuing to record the mean feedback speed and torque at 1 Hz or more frequently and increasing speed at a constant rate such that it takes (4 to 6) min to sweep from 95% of warm idle to the highest speed above maximum power at which (50 to 75)% of maximum power occurs. If this highest speed is unsafe or unrepresentative (e.g, for ungoverned engines), use good engineering judgment to map up to the maximum safe speed or the maximum representative speed. Stop recording after you complete the sweep. From the series of mean speed and maximum torque values, use linear interpolation to determine intermediate values. Use this series of speeds and torques to generate the power map as described in paragraph (e) of this section.

(c) *Negative torque mapping.* If your engine is subject to a reference duty cycle that specifies negative torque values, generate a motoring map by any of the following procedures:

(1) Multiply the positive torques from your map by −40%. Use linear interpolation to determine intermediate values.

(2) Map the amount of negative torque required to motor the engine by repeating paragraph (b) of this section with minimum operator demand.

(3) Determine the amount of negative torque required to motor the engine at the following two points: At warm idle and at the highest speed above maximum power at which (50 to 75)% of maximum power occurs. If this highest speed is unsafe or unrepresentative (e.g, for ungoverned engines), use good engineering judgment to map up to the maximum safe speed or the maximum representative speed. Operate the engine at these two points at minimum operator demand. Use linear interpolation to determine intermediate values.

(d) *Mapping constant-speed engines.* For constant-speed engines, generate a map as follows:

(1) Record the atmospheric pressure.

(2) Warm up the engine by operating it. We recommend operating the engine at approximately 75% of the engine's expected maximum power. Continue the warm-up until either the engine coolant, block, or head absolute temperature is within ±2% of its mean value for at least 2 min or until the engine thermostat controls engine temperature.

(3) You may operate the engine with a production constant-speed governor or simulate a constant-speed governor by controlling engine speed with an operator demand control system described in § 1065.110. Use either isochronous or speed-droop governor operation, as appropriate.

(4) With the governor or simulated governor controlling speed using operator demand, operate the engine at no-load governed speed (at high speed, not low idle) for at least 15 seconds.

(5) Record at 1 Hz the mean of feedback speed and torque. Use the dynamometer to increase torque at a constant rate. Unless the standard-setting part specifies otherwise, complete the map such that it takes (2 to 4) min to sweep from no-load governed speed to the lowest speed below maximum mapped power at which the engine develops (85–95)% of maximum mapped power. You may map your engine to lower speeds. Stop recording after you complete the sweep. Use this series of speeds and torques to generate the power map as described in paragraph (e) of this section.

(e) *Power mapping.* For all engines, create a power-versus-speed map by transforming torque and speed values to corresponding power values. Use the mean values from the recorded map data. Do not use any interpolated values. Multiply each torque by its corresponding speed and apply the appropriate conversion factors to arrive at units of power (kW).

(f) *Measured and declared test speeds and torques.* You may use test speeds and torques that you declare instead of measured speeds and torques if you declare them before engine mapping and they meet the criteria in this paragraph (f). Otherwise, you must use measured speed and torque.

(1) *Measured speeds and torques.* Determine the applicable measured speeds and torques according to § 1065.610:

(i) Measured maximum test speed for variable-speed engines.

(ii) Measured maximum test torque for constant-speed engines.

(iii) Measured ''A'', ''B'', and ''C'' speeds for steady-state tests.

(iv) Measured intermediate speed for steady-state tests.

(2) *Required declared speeds.* You must declare the following speeds:

(i) Warmed-up, low-idle speed for variable-speed engines. Declare this speed in a way that is representative of in-use operation. For example, if your engine is typically connected to an automatic transmission or a hydrostatic transmission, declare this speed at the idle speed at which your engine operates when the transmission is engaged.

(ii) Warmed-up, no-load, high-idle speed for constant-speed engines.

(3) *Optional declared speeds.* You may declare an enhanced idle speed according to § 1065.610. You may use a declared value for any of the following as long as the declared value is within (97.5 to 102.5)% of its corresponding measured value:

(i) Measured maximum test speed for variable-speed engines.

(ii) Measured intermediate speed for steady-state tests.

(iii) Measured ''A'', ''B'', and ''C'' speeds for steady-state tests.

(4) *Declared torques.* You may declare an enhanced idle torque according to § 1065.610. You may declare maximum test torque as long as it is within (95 to 100)% of the measured value.

(g) *Other mapping procedures.* You may use other mapping procedures if you believe the procedures specified in this section are unsafe or unrepresentative for your engine. Any alternate techniques must satisfy the intent of the specified mapping

procedures, which is to determine the maximum available torque at all engine speeds that occur during a duty cycle. Report any deviations from this section's mapping procedures.

§ 1065.512 Duty cycle generation.

(a) The standard-setting part defines applicable duty cycles in a normalized format. A normalized duty cycle consists of a sequence of paired values for speed and torque or for speed and power.

(b) Transform normalized values of speed, torque, and power using the following conventions:

(1) *Engine speed for variable-speed engines.* For variable-speed engines, normalized speed may be expressed as a percentage between idle speed and maximum test speed, f_{ntest}, or speed may be expressed by referring to a defined speed by name, such as warm idle,'' ''intermediate speed,'' or ''A,'' ''B,'' or ''C'' speed. Section 1065.610 describes how to transform these normalized values into a sequence of reference speeds, f_{nref}. Note that the cycle-validation criteria in § 1065.514 allow an engine to govern itself at its in-use idle speed. This allowance permits you to test engines with enhanced-idle devices and to simulate the effects of transmissions such as automatic transmissions.

(2) *Engine torque for variable-speed engines.* For variable-speed engines, normalized torque is expressed as a percentage of the mapped torque at the corresponding reference speed. Section 1065.610 describes how to transform normalized torques into a sequence of reference torques, T_{ref}. Section 1065.610 also describes under what conditions you may command T_{ref} greater than the reference torque you calculated from a normalized duty cycle. This provision permits you to command T_{ref} values representing curb-idle transmission torque (CITT).

(3) *Engine torque for constant-speed engines.* For constant-speed engines, normalized torque is expressed as a percentage of maximum test torque, T_{test}. Section 1065.610 describes how to transform normalized torques into a sequence of reference torques, T_{ref}. Section 1065.610 also describes under what conditions you may command T_{ref} greater than 0 N·m when a normalized duty cycle specifies a 0% torque command.

(4) *Engine power.* For all engines, normalized power is expressed as a percentage of mapped power at maximum test speed, f_{ntest}. Section 1065.610 describes how to transform these normalized values into a sequence of reference powers, P_{ref}. You may convert these reference powers to reference speeds and torques for operator demand and dynamometer control.

(c) For variable-speed engines, command reference speeds and torques sequentially to perform a duty cycle. Issue speed and torque commands at a frequency of at least 5 Hz for transient cycles and at least 1 Hz for steady-state cycles (*i.e.*, discrete-mode and ramped-modal). For transient cycles, linearly interpolate between the 1 Hz reference values specified in the standard-setting part to determine the 5 Hz reference speeds and torques. During an emission test, record the 1 Hz mean values of the reference speeds and torques and the feedback speeds and torques. Use these recorded values to calculate cycle-validation statistics and total work.

(d) For constant-speed engines, operate the engine with the same production governor you used to map the engine in § 1065.525 or simulate the in-use operation of a governor the same way you simulated it to map the engine in § 1065.525. Command reference torque values sequentially to perform a duty cycle. Issue torque commands at a frequency of at least 5 Hz for transient cycles and at least 1 Hz for steady-state cycles (i.e, discrete-mode, ramped-modal). For transient cycles, linearly interpolate between the 1 Hz reference values specified in the standard-setting part to determine the 5 Hz reference torque values. During an emission test, record the 1 Hz mean values of the reference torques and the feedback speeds and torques. Use these recorded values to calculate cycle-validation statistics and total work.

(e) You may perform practice duty cycles with the test engine to optimize operator demand and dynamometer controls to meet the cycle-validation criteria specified in § 1065.514.

§ 1065.514 Cycle-validation criteria.

This section describes how to determine if the engine's operation during the test adequately matched the reference duty cycle. This section applies only to speed, torque, and power from the engine's primary output shaft. Other work inputs and outputs are not subject to cycle-validation criteria. For any data required in this section, use the duty cycle reference and feedback values that you recorded during a test interval.

(a) *Testing performed by EPA.* Our tests must meet the specifications of paragraph (g) of this section, unless we determine that failing to meet the specifications is related to engine performance rather than to shortcomings of the dynamometer or other laboratory equipment.

(b) *Testing performed by manufacturers.* Emission tests that meet the specifications of paragraph (g) of this section satisfy the standard-setting part's requirements for duty cycles. You may ask to use a dynamometer or other laboratory equipment that cannot meet those specifications. We will approve your request as long as using the alternate equipment does not affect your ability to show compliance with the applicable emission standards.

(c) *Time-alignment.* Because time lag between feedback values and the reference values may bias cycle-validation results, you may advance or delay the entire sequence of feedback engine speed and torque pairs to synchronize them with the reference sequence.

(d) *Calculating work.* Before calculating work values, omit any points recorded during engine cranking and starting. Cranking and starting includes any time when an engine starter is engaged, any time when the engine is motored with a dynamometer for the sole purpose of starting the engine, and any time during operation before reaching idle speed. See § 1065.525(a) and (b) for more information about engine cranking. After omitting points recorded during engine cranking and starting, but before omitting any points under paragraph (e) of this section, calculate total work, W, based on the feedback values and reference work, W_{ref}, based on the reference values, as described in § 1065.650.

(e) *Omitting additional points.* Besides engine cranking, you may omit additional points from cycle-validation statistics as described in the following table:

TABLE 1 OF § 1065.514.—PERMISSIBLE CRITERIA FOR OMITTING POINTS FROM DUTY-CYCLE REGRESSION STATISTICS

When operator demandis at its. . .	you may omit. . .	if. . .
For reference duty cycles that are specified in terms of speed and torque (f_{nref}, T_{ref}).		
minimum	power and torque	$T_{ref} < 0\%$ (motoring).
minimum	power and speed	$f_{nref} = 0\%$ (idle) and $T_{ref} = 0\%$ (idle) and $T_{ref} - (2\% \cdot T_{max\ mapped}) < T < T_{ref} + (2\% \cdot T_{max\ mapped})$.
minimum	power and either torque or speed	$f_n > f_{nref}$ or $T > T_{ref}$ but not if $f_n > f_{nref}$ and $T > T_{ref}$.
maximum	power and either torque or speed	$f_n < f_{nref}$ or $T < T_{ref}$ but not if $f_n < f_{nef}$ and $T < T_{ref}$.
For reference duty cycles that are specified in terms of speed and power (f_{nref}, P_{ref}).		
minimum	power and torque	$P_{ref} < 0\%$ (motoring).
minimum	power and speed	$f_{nref} = 0\%$ (idle) and $P_{ref} = 0\ \%$ (idle) and $P_{ref} - (2\% \cdot P_{max\ mapped}) < P < P_{ref} + (2\% \cdot P_{max\ mapped})$.
minimum	power and either torque or speed	$f_n > f_{nref}$ or $P > P_{ref}$ but not if $f_n > f_{nref}$ and $P > P_{ref}$.
maximum	power and either torque or speed	$f_n < f_{nref}$ or $P < P_{ref}$ but not if $f_n < f_{nef}$ and $P < P_{ref}$.

(f) *Statistical parameters.* Use the remaining points to calculate regression statistics described in § 1065.602. Round calculated regression statistics to the same number of significant digits as the criteria to which they are compared. Refer to Table 2 of § 1065.514 for the criteria. Calculate the following regression statistics :

(1) Slopes for feedback speed, a_{1fn}, feedback torque, a_{1T}, and feedback power a_{1P}.

(2) Intercepts for feedback speed, a_{0fn}, feedback torque, a_{0T}, and feedback power a_{0P}.

(3) Standard estimates of error for feedback speed, SEE_{fn}, feedback torque, SE_T, and feedback power SEE_P.

(4) Coefficients of determination for feedback speed, r^2_{fn}, feedback torque, $r^2{}_T$, and feedback power $r^2{}_p$.

(g) *Cycle-validation criteria.* Unless the standard-setting part specifies otherwise, use the following criteria to validate a duty cycle:

(1) For variable-speed engines, apply all the statistical criteria in Table 2 of this section.

(2) For constant-speed engines, apply only the statistical criteria for torque in the Table 2 of this section.

TABLE 2 OF § 1065.514.—DEFAULT STATISTICAL CRITERIA FOR VALIDATING DUTY CYCLES

Parameter	Speed	Torque	Power
Slope, a_1	$0.950 \le a_1 < 1.030$	$0.830 \le a_1 < 1.030$	$0.830 \le a_1 < 1.030$.
Absolute value of intercept, $\|a_0\|$	≤ 10% of warm idle	≤ 2.0% of maximum mapped torque.	≤ 2.0% of maximum mapped power.
Standard error of estimate, SEE	≤ 5.0% of maximum test speed	≤ 10% of maximum mapped torque.	≤ 10% of maximum mapped power.
Coefficient of determination, r^2	≥ 0.970	≥ 0.850	≥ 0.910.

§ 1065.520 Pre-test verification procedures and pre-test data collection.

(a) If your engine must comply with a PM standard, follow the procedures for PM sample preconditioning and tare weighing according to § 1065.590.

(b) Unless the standard-setting part specifies different values, verify that ambient conditions are within the following tolerances before the test:

(1) Ambient temperature of (20 to 30) °C.

(2) Atmospheric pressure of (80.000 to 103.325) kPa and within ±5% of the value recorded at the time of the last engine map.

(3) Dilution air as specified in § 1065.140(b).

(c) You may test engines at any intake-air humidity, and we may test engines at any intake-air humidity.

(d) Verify that auxiliary-work inputs and outputs are configured as they were during engine mapping, as described in§ 1065.510(a).

(e) You may perform a final calibration of the speed, torque, and proportional-flow control systems, which may include performing practice duty cycles.

(f) You may perform the following recommended procedure to precondition sampling systems:

(1) Start the engine and use good engineering judgment to bring it to 100% torque at any speed above its peak-torque speed.

(2) Operate any dilution systems at their expected flow rates. Prevent aqueous condensation in the dilution systems.

(3) Operate any PM sampling systems at their expected flow rates.

(4) Sample PM for at least 10 min using any sample media. You may change sample media during preconditioning. You may discard preconditioning samples without weighing them.

(5) You may purge any gaseous sampling systems during preconditioning.

(6) You may conduct calibrations or verifications on any idle equipment or analyzers during preconditioning.

(7) Proceed with the test sequence described in § 1065.530(a)(1).

(g) After the last practice or preconditioning cycle before an emission test, verify the amount of contamination in the HC sampling system as follows:

(1) Select the HC analyzer range for measuring the flow-weighted mean concentration expected at the HC standard.

(2) Zero the HC analyzer at the analyzer zero or sample port. Note that FID zero and span balance gases may be any combination of purified air or purified nitrogen that meets the

specifications of § 1065.750. We recommend FID analyzer zero and span gases that contain approximately the flow-weighted mean concentration of O_2 expected during testing.

(3) Span the HC analyzer using span gas introduced at the analyzer span or sample port. Span on a carbon number basis of one (C_1). For example, if you use a C_3H_8 span gas of concentration 200 μmol/mol, span the FID to respond with a value of 600 μmol/mol.

(4) Overflow zero gas at the HC probe or into a fitting between the HC probe and its transfer line.

(5) Measure the HC concentration in the sampling system, as follows:

(i) For continuous sampling, record the mean HC concentration as overflow zero air flows.

(ii) For batch sampling, fill the sample medium and record its mean HC concentration.

(6) Record this value as the initial HC concentration, x_{HCinit}, and use it to correct measured values as described in § 1065.660.

(7) If x_{HCinit} exceeds the greatest of the following values, determine the source of the contamination and take corrective action, such as purging the system during an additional preconditioning cycle or replacing contaminated portions:

(i) 2% of the flow-weighted mean concentration expected at the standard.

(ii) 2% of the flow-weighted mean concentration measured during testing.

(iii) For any compression-ignition engines, any two-stroke spark ignition engines, or 4-stroke spark-ignition engines that are less than 19 kW, 2 μmol/mol.

(8) If corrective action does not resolve the deficiency, you may request to use the contaminated system as an alternate procedure under § 1065.10.

§ 1065.525 Engine starting, restarting, and shutdown.

(a) Start the engine using one of the following methods:

(1) Start the engine as recommended in the owners manual using a production starter motor and adequately charged battery or a suitable power supply.

(2) Use the dynamometer to start the engine. To do this, motor the engine within ±25% of its typical in-use cranking speed. Stop cranking within 1 second of starting the engine.

(b) If the engine does not start after 15 seconds of cranking, stop cranking and determine why the engine failed to start, unless the owners manual or the service-repair manual describes the longer cranking time as normal.

(c) Respond to engine stalling with the following steps:

(1) If the engine stalls during warm-up before emission sampling begins, restart the engine and continue warm-up.

(2) If the engine stalls during preconditioning before emission sampling begins, restart the engine and restart the preconditioning sequence.

(3) If the engine stalls at any time after emission sampling begins for a transient test or ramped-modal cycle test, the test is void.

(4) If the engine stalls at any time after emission sampling begins for a discrete mode in a discrete-mode duty cycle test, void the test or perform the following steps to continue the test:

(i) Restart the engine.

(ii) Use good engineering judgment to restart the test sequence using the appropriate steps in § 1065.530(b)

(iii) Precondition the engine at the previous discrete mode for a similar amount of time compared with how long it was initially run.

(iv) Advance to the mode at which the engine stalled and continue with the duty cycle as specified in the standard-setting part.

(v) Complete the remainder of the test according to the requirements in this subpart.

(d) Shut down the engine according to the manufacturer's specifications.

§ 1065.530 Emission test sequence.

(a) Time the start of testing as follows:

(1) Perform one of the following if you precondition sampling systems as described in § 1065.520(f):

(i) For cold-start duty cycles, shut down the engine. Unless the standard-setting part specifies that you may only perform a natural engine cooldown, you may perform a forced engine cooldown. Use good engineering judgment to set up systems to send cooling air across the engine, to send cool oil through the engine lubrication system, to remove heat from coolant through the engine cooling system, and to remove heat from an exhaust aftertreatment system. In the case of a forced aftertreatment cooldown, good engineering judgment would indicate that you not start flowing cooling air until the aftertreatment system has cooled below its catalytic activation temperature. For platinum-group metal catalysts, this temperature is about 200 °C. Once the aftertreatment system has naturally cooled below its catalytic activation temperature, good engineering judgment would indicate that you use clean air with a temperature of at least 15 °C, and direct the air through the aftertreatment system in the normal direction of exhaust flow. Do not use any cooling procedure that results in unrepresentative emissions (see § 1065.10(c)(1)). You may start a cold-start duty cycle when the temperatures of an engine's lubricant, coolant, and aftertreatment systems are all between (20 and 30) °C.

(ii) For hot-start emission measurements, shut down the engine. Start a hot-start duty cycle within 20 min of engine shutdown.

(iii) For testing that involves hot-stabilized emission measurements, such as any steady-state testing, you may continue to operate the engine at f_{ntest} and 100% torque if that is the first operating point. Otherwise, operate the engine at warm, idle or the first operating point of the duty cycle. In any case, start the emission test within 10 min after you complete the preconditioning procedure.

(2) For all other testing, perform one of the following:

(i) For cold-start duty cycles, prepare the engine according to paragraph (a)(1)(i) of this section.

(ii) For hot-start emission measurements, first operate the engine at any speed above peak-torque speed and at (65 to 85) % of maximum mapped power until either the engine coolant, block, or head absolute temperature is within ±2% of its mean value for at least 2 min or until the engine thermostat controls engine temperature. Shut down the engine. Start the duty cycle within 20 min of engine shutdown.

(iii) For testing that involves hot-stabilized emission measurements, bring the engine either to warm idle or the first operating point of the duty cycle. Start the test within 10 min of achieving temperature stability. Determine temperature stability either as the point at which the engine coolant, block, or head absolute temperature is within ±2% of its mean value for at least 2 min, or as the point at which the engine thermostat controls engine temperature.

(b) Take the following steps before emission sampling begins:

(1) For batch sampling, connect clean storage media, such as evacuated bags or tare-weighed filters.

(2) Start all measurement instruments according to the instrument manufacturer's instructions and using good engineering judgment.

(3) Start dilution systems, sample pumps, cooling fans, and the data-collection system.

(4) Pre-heat or pre-cool heat exchangers in the sampling system to within their operating temperature tolerances for a test.

(5) Allow heated or cooled components such as sample lines,

filters, chillers, and pumps to stabilize at their operating temperatures.

(6) Verify that there are no significant vacuum-side leaks according to § 1065.345.

(7) Adjust the sample flow rates to desired levels, using bypass flow, if desired.

(8) Zero or re-zero any electronic integrating devices, before the start of any test interval.

(9) Select gas analyzer ranges. You may use analyzers that automatically switch ranges during a test only if switching is performed by changing the span over which the digital resolution of the instrument is applied. During a test you may not switch the gains of an analyzer's analog operational amplifier(s).

(10) Zero and span all continuous analyzers using NIST-traceable gases that meet the specifications of § 1065.750. Span FID analyzers on a carbon number basis of one (1), C_1. For example, if you use a C_3H_8 span gas of concentration 200 μmol/mol, span the FID to respond with a value of 600 μmol/mol.

(11) We recommend that you verify gas analyzer response after zeroing and spanning by flowing a calibration gas that has a concentration near one-half of the span gas concentration. Based on the results and good engineering judgment, you may decide whether or not to re-zero, re-span, or re-calibrate a gas analyzer before starting a test.

(12) If you correct for dilution air background concentrations of engine exhaust constituents, start measuring and recording background concentrations.

(c) Start testing as follows:

(1) If an engine is already running and warmed up, and starting is not part of the duty cycle, perform the following for the various duty cycles.

(i) *Transient and steady-state ramped-modal cycles.* Simultaneously start running the duty cycle, sampling exhaust gases, recording data, and integrating measured values.

(ii) *Steady-state discrete-mode cycles.* Control speed and torque to the first mode in the test cycle. Follow the instructions in the standard-setting part to determine how long to stabilize engine operation at each mode and how long to sample emissions at each mode.

(2) If engine starting is part of the duty cycle, initiate data logging, sampling of exhaust gases, and integrating measured values before attempting to start the engine. Initiate the duty cycle when the engine starts.

(d) At the end of the test interval, continue to operate all sampling and dilution systems to allow the sampling system's response time to elapse. Then stop all sampling and recording, including the recording of background samples. Finally, stop any integrating devices and indicate the end of the duty cycle in the recorded data.

(e) Shut down the engine if you have completed testing or if it is part of the duty cycle.

(f) If testing involves another duty cycle after a soak period with the engine off, start a timer when the engine shuts down, and repeat the steps in paragraphs (b) through (e) of this section as needed.

(g) Take the following steps after emission sampling is complete:

(1) For any proportional batch sample, such as a bag sample or PM sample, verify that proportional sampling was maintained according to § 1065.545. Void any samples that did not maintain proportional sampling according to § 1065.545.

(2) Place any used PM samples into covered or sealed containers and return them to the PM-stabilization environment. Follow the PM sample post-conditioning and total weighing procedures in § 1065.595.

(3) As soon as practical after the duty cycle is complete but no later than 30 minutes after the duty cycle is complete, perform the following:

(i) Zero and span all batch gas analyzers.

(ii) Analyze any gaseous batch samples, including background samples.

(4) After quantifying exhaust gases, verify drift as follows:

(i) For batch and continuous gas analyzers, record the mean analyzer value after stabilizing a zero gas to the analyzer. Stabilization may include time to purge the analyzer of any sample gas, plus any additional time to account for analyzer response.

(ii) Record the mean analyzer value after stabilizing the span gas to the analyzer. Stabilization may include time to purge the analyzer of any sample gas, plus any additional time to account for analyzer response.

(iii) Use these data to validate and correct for drift as described in § 1065.550.

(h) Determine whether or not the test meets the cycle-validation criteria in § 1065.514.

(1) If the criteria void the test, you may retest using the same denormalized duty cycle, or you may re-map the engine, denormalize the reference duty cycle based on the new map and retest the engine using the new denormalized duty cycle.

(2) If the criteria void the test for a constant-speed engine only during commands of maximum test torque, you may do the following:

(i) Determine the first and last feedback speeds at which maximum test torque was commanded.

(ii) If the last speed is greater than or equal to 90% of the first speed, the test is void. You may retest using the same denormalized duty cycle, or you may re-map the engine, denormalize the reference duty cycle based on the new map and retest the engine using the new denormalized duty cycle.

(iii) If the last speed is less than 90% of the first speed, reduce maximum test torque by 5%, and proceed as follows:

(A) Denormalize the entire duty cycle based on the reduced maximum test torque according to § 1065.512.

(B) Retest the engine using the denormalized test cycle that is based on the reduced maximum test torque.

(C) If your engine still fails the cycle criteria, reduce the maximum test torque by another 5% of the original maximum test torque.

(D) If your engine fails after repeating this procedure four times, such that your engine still fails after you have reduced the maximum test torque by 20% of the original maximum test torque, notify us and we will consider specifying a more appropriate duty cycle for your engine under the provisions of § 1065.10(c).

§ 1065.545 Validation of proportional flow control for batch sampling.

For any proportional batch sample such as a bag or PM filter, demonstrate that proportional sampling was maintained using one of the following, noting that you may omit up to 5% of the total number of data points as outliers:

(a) For any pair of flow meters, use the 1 Hz (or more frequently) recorded sample and total flow rates with the statistical calculations in § 1065.602. Determine the standard error of the estimate, SEE, of the sample flow rate versus the total flow rate. For each test interval, demonstrate that SEE was less than or equal to 3.5% of the mean sample flow rate.

(b) For any pair of flow meters, use the 1 Hz (or more frequently) recorded sample and total flow rates to demonstrate that each flow rate was constant within ±2.5% of its respective mean or target flow rate. You may use the following options instead of recording the respective flow rate of each type of meter:

(1) *Critical-flow venturi option.* For critical-flow venturis, you may use the 1 Hz (or more frequently) recorded venturi-inlet conditions. Demonstrate that the flow density at the venturi inlet

was constant within ±2.5% of the mean or target density over each test interval. For a CVS critical-flow venturi, you may demonstrate this by showing that the absolute temperature at the venturi inlet was constant within ±4% of the mean or target absolute temperature over each test interval.

(2) *Positive-displacement pump option.* You may use the 1 Hz (or more frequently) recorded pump-inlet conditions. Demonstrate that the density at the pump inlet was constant within ±2.5% of the mean or target density over each test interval. For a CVS pump, you may demonstrate this by showing that the absolute temperature at the pump inlet was constant within ±2% of the mean or target absolute temperature over each test interval.

(c) Using good engineering judgment, demonstrate with an engineering analysis that the proportional-flow control system inherently ensures proportional sampling under all circumstances expected during testing. For example, you might use CFVs for both sample flow and total flow and demonstrate that they always have the same inlet pressures and temperatures and that they always operate under critical-flow conditions.

§ 1065.550 Gas analyzer range validation, drift validation, and drift correction.

(a) *Range validation.* If an analyzer operated above 100% of its range at any time during the test, perform the following steps:

(1) For batch sampling, re-analyze the sample using the lowest analyzer range that results in a maximum instrument response below 100%. Report the result from the lowest range from which the analyzer operates below 100% of its range for the entire test.

(2) For continuous sampling, repeat the entire test using the next higher analyzer range. If the analyzer again operates above 100% of its range, repeat the test using the next higher range. Continue to repeat the test until the analyzer operates at less than 100% of its range for the entire test.

(b) *Drift validation and drift correction.* Calculate two sets of brake-specific emission results. Calculate one set using the data before drift correction and the other set after correcting all the data for drift according to § 1065.672. Use the two sets of brake-specific emission results as follows:

(1) If the difference between the corrected and uncorrected brake-specific emissions are within ±4% of the uncorrected results for all regulated emissions, the test is validated for drift. If not, the entire test is void.

(2) If the test is validated for drift, you must use only the drift-corrected emission results when reporting emissions, unless you demonstrate to us that using the drift-corrected results adversely affects your ability to demonstrate whether or not your engine complies with the applicable standards.

§ 1065.590 PM sample preconditioning and tare weighing.

Before an emission test, take the following steps to prepare PM samples and equipment for PM measurements:

(a) Make sure the balance and PM-stabilization environments meet the periodic verifications in § 1065.390.

(b) Visually inspect unused sample media (such as filters) for defects.

(c) To handle PM samples, use electrically grounded tweezers or a grounding strap, as described in § 1065.190.

(d) Place unused sample media in one or more containers that are open to the PM-stabilization environment. If you are using filters, you may place them in the bottom half of a filter cassette.

(e) Stabilize sample media in the PM-stabilization environment. Consider an unused sample medium stabilized as long as it has been in the PM-stabilization environment for a minimum of 30 min, during which the PM-stabilization environment has been within the specifications of § 1065.190.

(f) Weigh the sample media automatically or manually, as follows:

(1) For automatic weighing, follow the automation system manufacturer's instructions to prepare samples for weighing. This may include placing the samples in a special container.

(2) For manual weighing, use good engineering judgment to determine if substitution weighing is necessary to show that an engine meets the applicable standard. You may follow the substitution weighing procedure in paragraph (j) of this section, or you may develop your own procedure.

(g) Correct the measured weight for buoyancy as described in § 1065.690. These buoyancy-corrected values are the tare masses of the PM samples.

(h) You may repeat measurements to determine mean masses. Use good engineering judgment to exclude outliers and calculate mean mass values.

(i) If you use filters as sample media, load unused filters that have been tare-weighed into clean filter cassettes and place the loaded cassettes in a covered or sealed container before taking them to the test cell for sampling. We recommend that you keep filter cassettes clean by periodically washing or wiping them with a compatible solvent applied using a lint-free cloth. Depending upon your cassette material, ethanol (C_2H_5OH) might be an acceptable solvent. Your cleaning frequency will depend on your engine's level of PM and HC emissions.

(j) Substitution weighing involves measurement of a reference weight before and after each weighing of a PM sample. While substitution weighing requires more measurements, it corrects for a balance's zero-drift and it relies on balance linearity only over a small range. This is most advantageous when quantifying net PM masses that are less than 0.1% of the sample medium's mass. However, it may not be advantageous when net PM masses exceed 1% of the sample medium's mass. The following steps are an example of substitution weighing:

(1) Use electrically grounded tweezers or a grounding strap, as described in § 1065.190.

(2) Use a static neutralizer as described in § 1065.190 to minimize static electric charge on any object before it is placed on the balance pan.

(3) Place on the balance pan a metal calibration weight that has a similar mass to that of the sample medium and meets the specifications for calibration weights in § 1065.790. If you use filters, the weight's mass should be about (80 to 100) mg for typical 47 mm diameter filters.

(4) Record the stable balance reading, then remove the calibration weight.

(5) Weigh an unused sample, record the stable balance reading and record the balance environment's dewpoint, ambient temperature, and atmospheric pressure.

(6) Reweigh the calibration weight and record the stable balance reading.

(7) Calculate the arithmetic mean of the two calibration-weight readings that you recorded immediately before and after weighing the unused sample. Subtract that mean value from the unused sample reading, then add the true mass of the calibration weight as stated on the calibration-weight certificate. Record this result. This is the unused sample's tare weight without correcting for buoyancy.

(8) Repeat these substitution-weighing steps for the remainder of your unused sample media.

(9) Follow the instructions given in paragraphs (g) through (i) of this section.

§ 1065.595 PM sample post-conditioning and total weighing.

(a) Make sure the weighing and PM-stabilization environments have met the periodic verifications in § 1065.390.

(b) In the PM-stabilization environment, remove PM samples from

sealed containers. If you use filters, you may remove them from their cassettes before or after stabilization. When you remove a filter from a cassette, separate the top half of the cassette from the bottom half using a cassette separator designed for this purpose.

(c) To handle PM samples, use electrically grounded tweezers or a grounding strap, as described in § 1065.190.

(d) Visually inspect PM samples. If PM ever contacts the transport container, cassette assembly, filter-separator tool, tweezers, static neutralizer, balance, or any other surface, void the measurements associated with that sample and clean the surface it contacted.

(e) To stabilize PM samples, place them in one or more containers that are open to the PM-stabilization environment, which is described in § 1065.190. A PM sample is stabilized as long as it has been in the PM-stabilization environment for one of the following durations, during which the stabilization environment has been within the specifications of § 1065.190:

(1) If you expect that a filter's total surface concentration of PM will be greater than about 0.473 mm/mm², expose the filter to the stabilization environment for at least 60 minutes before weighing.

(2) If you expect that a filter's total surface concentration of PM will be less than about 0.473 mm/mm², expose the filter to the stabilization environment for at least 30 minutes before weighing.

(3) If you are unsure of a filter's total surface concentration of PM, expose the filter to the stabilization environment for at least 60 minutes before weighing.

(f) Repeat the procedures in § 1065.590(f) through (i) to weigh used PM samples. Refer to a sample's post-test mass, after correcting for buoyancy, as its total mass.

(g) Subtract each buoyancy-corrected tare mass from its respective buoyancy-corrected total mass. The result is the net PM mass, m_{PM}. Use m_{PM} in emission calculations in § 1065.650.

Subpart G—Calculations and Data Requirements

§ 1065.601 Overview.

(a) This subpart describes how to—

(1) Use the signals recorded before, during, and after an emission test to calculate brake-specific emissions of each regulated constituent.

(2) Perform calculations for calibrations and performance checks.

(3) Determine statistical values.

(b) You may use data from multiple systems to calculate test results for a single emission test, consistent with good engineering judgment. You may not use test results from multiple emission tests to report emissions. We allow weighted means where appropriate. You may discard statistical outliers, but you must report all results.

(c) You may use any of the following calculations instead of the calculations specified in this subpart G:

(1) Mass-based emission calculations prescribed by the International Organization for Standardization (ISO), according to ISO 8178.

(2) Other calculations that you show are equivalent to within ±0.1% of the brake-specific emission results determined using the calculations specified in this subpart G.

§ 1065.602 Statistics.

(a) *Overview.* This section contains equations and example calculations for statistics that are specified in this part. In this section we use the letter "y" to denote a generic measured quantity, the superscript over-bar "–"to denote an arithmetic mean, and the subscript "$_{ref}$" to denote the reference quantity being measured.

(b) *Arithmetic mean.* Calculate an arithmetic mean, ȳ≤, as follows:

$$\bar{y} = \frac{\sum_{i=1}^{10} y_i}{N} \qquad \text{Eq. 1065.602-1}$$

Example:

N = 3

y_1 = 10.60

y_2 = 11.91

$y_N = y_3$ = 11.09

$$\bar{y} = \frac{10.60 + 11.91 + 11.09}{3}$$

ȳ≤ = 11.20

(c) *Standard deviation.* Calculate the standard deviation for a non-biased (*e.g.*, N–1) sample, σ, as follows:

$$\sigma_y = \sqrt{\frac{\sum_{i=1}^{N} (y_i - \bar{y})^2}{(N-1)}} \qquad \text{Eq. 1065.602-2}$$

Example:

N = 3

y_1 = 10.60

y_2 = 11.91

$y_N = y_3$ = 11.09

ȳ≤ = 11.20

$$\sigma_y = \sqrt{\frac{(10.60 - 11.2)^2 + (11.91 - 11.2)^2 + (11.09 - 11.2)^2}{2}}$$

σ_y = 0.6619

(d) *Root mean square.* Calculate a root mean square, rms_y, as follows:

$$rms_y = \sqrt{\frac{1}{N}\sum_{i=1}^{N} y_i^2} \qquad \text{Eq. 1065.602-3}$$

Example:

N = 3

y_1 = 10.60

y_2 = 11.91

$y_N = y_3$ = 11.09

$$rms_y = \sqrt{\frac{10.60 + 11.91^2 + 11.09^2}{3}}$$

rms_y = 11.21

(e) *Accuracy.* Calculate an accuracy, as follows, noting that the are arithmetic means, each determined by repeatedly measuring one sample of a single reference quantity, y_{ref}:

$$\text{accuracy} = |y_{ref} - \bar{y}| \qquad \text{Eq. 1065.602-4}$$

Example:

y_{ref} = 1800.0

N = 10

$$\bar{y} = \frac{\sum_{i=1}^{10} \bar{y}_i}{10} = 1802.5$$

accuracy = | 1800.0 − 1802.5 |

accuracy = 2.5

(f) *t-test.* Determine if your data passes a t-test by using the following equations and tables:

(1) For an unpaired t-test, calculate the t statistic and its number of degrees of freedom, v, as follows:

$$t = \frac{|\bar{y}_{ref} - \bar{y}|}{\sqrt{\frac{\sigma_{ref}^2}{N_{ref}} + \frac{\sigma_y^2}{N}}} \qquad \text{Eq. 1065.602-5}$$

$$v = \frac{\left(\frac{\sigma_{ref}^2}{N_{ref}} + \frac{\sigma_y^2}{N}\right)^2}{\frac{\left(\sigma_{ref}^2/N_{ref}\right)^2}{N_{ref}-1} + \frac{\left(\sigma_y^2/N\right)^2}{N-1}} \qquad \text{Eq. 1065.602-6}$$

Example:

$\bar{y}_{ref} = 1205.3$
$\bar{y} = 1123.8$
$\sigma_{ref} = 9.399$
$\sigma_y = 10.583$
$N_{ref} = 11$
$N = 7$

$$t = \frac{|1205.3 - 1123.8|}{\sqrt{\frac{9.399^2}{11} + \frac{10.583^2}{7}}}$$

$t = 16.63$
$\sigma_{ref} = 9.399$
$\sigma_y = 10.583$
$N_{ref} = 11$
$N = 7$

$$v = \frac{\left(\frac{9.399^2}{11} + \frac{10.583^2}{7}\right)^2}{\frac{\left(9.399^2/11\right)^2}{11-1} + \frac{\left(10.583^2/7\right)^2}{7-1}}$$

$v = 11.76$

(2) For a paired t-test, calculate the t statistic and its number of degrees of freedom, v, as follows, noting that the ε_i are the errors (*e.g.*, differences) between each pair of y_{refi} and y_i:

$$t = \frac{|\bar{\varepsilon}| \cdot \sqrt{N}}{\sigma_\varepsilon} \qquad \text{Eq. 1065.602-7}$$

Example:

$\bar{\varepsilon} = -0.12580$
$N = 16$
$\sigma_\varepsilon = 0.04837$

$$t = \frac{|-0.12580| \cdot \sqrt{16}}{0.04837}$$

$t = 10.403$
$v = N - 1$

Example:

$N = 16$
$v = 16 - 1$
$v = 15$

(3) Use Table 1 of this section to compare t to the t_{crit} values tabulated versus the number of degrees of freedom. If t is less than t_{crit}, then t passes the t-test.

TABLE 1 OF § 1065.602.—CRITICAL T VALUES VERSUS NUMBER OF DEGREES OF FREEDOM, ν [1]

ν	Confidence	
	90%	95%
1	6.314	12.706
2	2.920	4.303
3	2.353	3.182
4	2.132	2.776
5	2.015	2.571
6	1.943	2.447
7	1.895	2.365

TABLE 1 OF § 1065.602.—CRITICAL T VALUES VERSUS NUMBER OF DEGREES OF FREEDOM, ν [1]—Continued

ν	Confidence	
	90%	95%
8	1.860	2.306
9	1.833	2.262
10	1.812	2.228
11	1.796	2.201
12	1.782	2.179
13	1.771	2.160
14	1.761	2.145
15	1.753	2.131
16	1.746	2.120
18	1.734	2.101
20	1.725	2.086
22	1.717	2.074
24	1.711	2.064
26	1.706	2.056
28	1.701	2.048
30	1.697	2.042
35	1.690	2.030
40	1.684	2.021
50	1.676	2.009
70	1.667	1.994
100	1.660	1.984
1000+	1.645	1.960

[1] Use linear interpolation to establish values not shown here.

(g) *F-test.* Calculate the F statistic as follows:

$$F_y = \frac{\sigma_y^2}{\sigma_{ref}^2} \qquad \text{Eq. 1065.602-8}$$

Example:

$$\sigma_y = \sqrt{\frac{\sum_{i=1}^{N}\left(y_i - \bar{y}\right)^2}{(N-1)}} = 10.583$$

$$\sigma_{ref} = \sqrt{\frac{\sum_{i=1}^{N_{ref}}\left(y_{refi} - \bar{y}_{ref}\right)^2}{\left(N_{ref}-1\right)}} = 9.399$$

$$F = \frac{10.583^2}{9.399^2}$$

F = 1.268

(1) For a 90% confidence F-test, use Table 2 of this section to compareF to the F_{crit90} values tabulated versus $(N-1)$ and$(N_{ref}-1)$. If F is less than F_{crit90}, thenF passes the F-test at 90% confidence.

(2) For a 95% confidence F-test, use Table 3 of this section to compareF to the F_{crit95} values tabulated versus $(N-1)$ and$(N_{ref}-1)$. If F is less than F_{crit95}, thenF passes the F-test at 95% confidence.

BILLING CODE 6560–50–P

Table 2 of §1065.602–Critical F values, F_{crit90}, versus N-1 and N_{ref}-1 at 90 % confidence

N-1	1	2	3	4	5	6	7	8	9	10	12	15	20	24	30	40	60	120	1000+
N_{ref}-1																			
1	39.86	49.50	53.59	55.83	57.24	58.20	58.90	59.43	59.85	60.19	60.70	61.22	61.74	62.00	62.26	62.52	62.79	63.06	63.32
2	8.526	9.000	9.162	9.243	9.293	9.326	9.349	9.367	9.381	9.392	9.408	9.425	9.441	9.450	9.458	9.466	9.475	9.483	9.491
3	5.538	5.462	5.391	5.343	5.309	5.285	5.266	5.252	5.240	5.230	5.216	5.200	5.184	5.176	5.168	5.160	5.151	5.143	5.134
4	4.545	4.325	4.191	4.107	4.051	4.010	3.979	3.955	3.936	3.920	3.896	3.870	3.844	3.831	3.817	3.804	3.790	3.775	3.761
5	4.060	3.780	3.619	3.520	3.453	3.405	3.368	3.339	3.316	3.297	3.268	3.238	3.207	3.191	3.174	3.157	3.140	3.123	3.105
6	3.776	3.463	3.289	3.181	3.108	3.055	3.014	2.983	2.958	2.937	2.905	2.871	2.836	2.818	2.800	2.781	2.762	2.742	2.722
7	3.589	3.257	3.074	2.961	2.883	2.827	2.785	2.752	2.725	2.703	2.668	2.632	2.595	2.575	2.555	2.535	2.514	2.493	2.471
8	3.458	3.113	2.924	2.806	2.726	2.668	2.624	2.589	2.561	2.538	2.502	2.464	2.425	2.404	2.383	2.361	2.339	2.316	2.293
9	3.360	3.006	2.813	2.693	2.611	2.551	2.505	2.469	2.440	2.416	2.379	2.340	2.298	2.277	2.255	2.232	2.208	2.184	2.159
10	3.285	2.924	2.728	2.605	2.522	2.461	2.414	2.377	2.347	2.323	2.284	2.244	2.201	2.178	2.155	2.132	2.107	2.082	2.055
11	3.225	2.860	2.660	2.536	2.451	2.389	2.342	2.304	2.274	2.248	2.209	2.167	2.123	2.100	2.076	2.052	2.026	2.000	1.972
12	3.177	2.807	2.606	2.480	2.394	2.331	2.283	2.245	2.214	2.188	2.147	2.105	2.060	2.036	2.011	1.986	1.960	1.932	1.904
13	3.136	2.763	2.560	2.434	2.347	2.283	2.234	2.195	2.164	2.138	2.097	2.053	2.007	1.983	1.958	1.931	1.904	1.876	1.846
14	3.102	2.726	2.522	2.395	2.307	2.243	2.193	2.154	2.122	2.095	2.054	2.010	1.962	1.938	1.912	1.885	1.857	1.828	1.797
15	3.073	2.695	2.490	2.361	2.273	2.208	2.158	2.119	2.086	2.059	2.017	1.972	1.924	1.899	1.873	1.845	1.817	1.787	1.755
16	3.048	2.668	2.462	2.333	2.244	2.178	2.128	2.088	2.055	2.028	1.985	1.940	1.891	1.866	1.839	1.811	1.782	1.751	1.718
17	3.026	2.645	2.437	2.308	2.218	2.152	2.102	2.061	2.028	2.001	1.958	1.912	1.862	1.836	1.809	1.781	1.751	1.719	1.686
18	3.007	2.624	2.416	2.286	2.196	2.130	2.079	2.038	2.005	1.977	1.933	1.887	1.837	1.810	1.783	1.754	1.723	1.691	1.657
19	2.990	2.606	2.397	2.266	2.176	2.109	2.058	2.017	1.984	1.956	1.912	1.865	1.814	1.787	1.759	1.730	1.699	1.666	1.631
20	2.975	2.589	2.380	2.249	2.158	2.091	2.040	1.999	1.965	1.937	1.892	1.845	1.794	1.767	1.738	1.708	1.677	1.643	1.607
21	2.961	2.575	2.365	2.233	2.142	2.075	2.023	1.982	1.948	1.920	1.875	1.827	1.776	1.748	1.719	1.689	1.657	1.623	1.586
20	2.949	2.561	2.351	2.219	2.128	2.061	2.008	1.967	1.933	1.904	1.859	1.811	1.759	1.731	1.702	1.671	1.639	1.604	1.567
23	2.937	2.549	2.339	2.207	2.115	2.047	1.995	1.953	1.919	1.890	1.845	1.796	1.744	1.716	1.686	1.655	1.622	1.587	1.549
24	2.927	2.538	2.327	2.195	2.103	2.035	1.983	1.941	1.906	1.877	1.832	1.783	1.730	1.702	1.672	1.641	1.607	1.571	1.533
25	2.918	2.528	2.317	2.184	2.092	2.024	1.971	1.929	1.895	1.866	1.820	1.771	1.718	1.689	1.659	1.627	1.593	1.557	1.518
26	2.909	2.519	2.307	2.174	2.082	2.014	1.961	1.919	1.884	1.855	1.809	1.760	1.706	1.677	1.647	1.615	1.581	1.544	1.504
27	2.901	2.511	2.299	2.165	2.073	2.005	1.952	1.909	1.874	1.845	1.799	1.749	1.695	1.666	1.636	1.603	1.569	1.531	1.491
28	2.894	2.503	2.291	2.157	2.064	1.996	1.943	1.900	1.865	1.836	1.790	1.740	1.685	1.656	1.625	1.593	1.558	1.520	1.478
29	2.887	2.495	2.283	2.149	2.057	1.988	1.935	1.892	1.857	1.827	1.781	1.731	1.676	1.647	1.616	1.583	1.547	1.509	1.467
30	2.881	2.489	2.276	2.142	2.049	1.980	1.927	1.884	1.849	1.819	1.773	1.722	1.667	1.638	1.606	1.573	1.538	1.499	1.456
40	2.835	2.440	2.226	2.091	1.997	1.927	1.873	1.829	1.793	1.763	1.715	1.662	1.605	1.574	1.541	1.506	1.467	1.425	1.377
60	2.791	2.393	2.177	2.041	1.946	1.875	1.819	1.775	1.738	1.707	1.657	1.603	1.543	1.511	1.476	1.437	1.395	1.348	1.291
120	2.748	2.347	2.130	1.992	1.896	1.824	1.767	1.722	1.684	1.652	1.601	1.545	1.482	1.447	1.409	1.368	1.320	1.265	1.193
1000+	2.706	2.303	2.084	1.945	1.847	1.774	1.717	1.670	1.632	1.599	1.546	1.487	1.421	1.383	1.342	1.295	1.240	1.169	1.000

Table 3 of §1065.602–Critical F values, F_{crit95}, versus N-1 and N_{ref}-1 at 95 % confidence

N-1	1	2	3	4	5	6	7	8	9	10	12	15	20	24	30	40	60	120	1000+
N_{ref}-1																			
1	161.4	199.5	215.7	224.5	230.1	233.9	236.7	238.8	240.5	241.8	243.9	245.9	248.0	249.0	250.1	251.1	252.2	253.2	254.3
2	18.51	19.00	19.16	19.24	19.29	19.33	19.35	19.37	19.38	19.39	19.41	19.42	19.44	19.45	19.46	19.47	19.47	19.48	19.49
3	10.12	9.552	9.277	9.117	9.014	8.941	8.887	8.845	8.812	8.786	8.745	8.703	8.660	8.639	8.617	8.594	8.572	8.549	8.526
4	7.709	6.944	6.591	6.388	6.256	6.163	6.094	6.041	5.999	5.964	5.912	5.858	5.803	5.774	5.746	5.717	5.688	5.658	5.628
5	6.608	5.786	5.410	5.192	5.050	4.950	4.876	4.818	4.773	4.735	4.678	4.619	4.558	4.527	4.496	4.464	4.431	4.399	4.365
6	5.987	5.143	4.757	4.534	4.387	4.284	4.207	4.147	4.099	4.060	4.000	3.938	3.874	3.842	3.808	3.774	3.740	3.705	3.669
7	5.591	4.737	4.347	4.120	3.972	3.866	3.787	3.726	3.677	3.637	3.575	3.511	3.445	3.411	3.376	3.340	3.304	3.267	3.230
8	5.318	4.459	4.066	3.838	3.688	3.581	3.501	3.438	3.388	3.347	3.284	3.218	3.150	3.115	3.079	3.043	3.005	2.967	2.928
9	5.117	4.257	3.863	3.633	3.482	3.374	3.293	3.230	3.179	3.137	3.073	3.006	2.937	2.901	2.864	2.826	2.787	2.748	2.707
10	4.965	4.103	3.708	3.478	3.326	3.217	3.136	3.072	3.020	2.978	2.913	2.845	2.774	2.737	2.700	2.661	2.621	2.580	2.538
11	4.844	3.982	3.587	3.357	3.204	3.095	3.012	2.948	2.896	2.854	2.788	2.719	2.646	2.609	2.571	2.531	2.490	2.448	2.405
12	4.747	3.885	3.490	3.259	3.106	2.996	2.913	2.849	2.796	2.753	2.687	2.617	2.544	2.506	2.466	2.426	2.384	2.341	2.296
13	4.667	3.806	3.411	3.179	3.025	2.915	2.832	2.767	2.714	2.671	2.604	2.533	2.459	2.420	2.380	2.339	2.297	2.252	2.206
14	4.600	3.739	3.344	3.112	2.958	2.848	2.764	2.699	2.646	2.602	2.534	2.463	2.388	2.349	2.308	2.266	2.223	2.178	2.131
15	4.543	3.682	3.287	3.056	2.901	2.791	2.707	2.641	2.588	2.544	2.475	2.403	2.328	2.288	2.247	2.204	2.160	2.114	2.066
16	4.494	3.634	3.239	3.007	2.852	2.741	2.657	2.591	2.538	2.494	2.425	2.352	2.276	2.235	2.194	2.151	2.106	2.059	2.010
17	4.451	3.592	3.197	2.965	2.810	2.699	2.614	2.548	2.494	2.450	2.381	2.308	2.230	2.190	2.148	2.104	2.058	2.011	1.960
18	4.414	3.555	3.160	2.928	2.773	2.661	2.577	2.510	2.456	2.412	2.342	2.269	2.191	2.150	2.107	2.063	2.017	1.968	1.917
19	4.381	3.522	3.127	2.895	2.740	2.628	2.544	2.477	2.423	2.378	2.308	2.234	2.156	2.114	2.071	2.026	1.980	1.930	1.878
20	4.351	3.493	3.098	2.866	2.711	2.599	2.514	2.447	2.393	2.348	2.278	2.203	2.124	2.083	2.039	1.994	1.946	1.896	1.843
21	4.325	3.467	3.073	2.840	2.685	2.573	2.488	2.421	2.366	2.321	2.250	2.176	2.096	2.054	2.010	1.965	1.917	1.866	1.812
22	4.301	3.443	3.049	2.817	2.661	2.549	2.464	2.397	2.342	2.297	2.226	2.151	2.071	2.028	1.984	1.938	1.889	1.838	1.783
23	4.279	3.422	3.028	2.796	2.640	2.528	2.442	2.375	2.320	2.275	2.204	2.128	2.048	2.005	1.961	1.914	1.865	1.813	1.757
24	4.260	3.403	3.009	2.776	2.621	2.508	2.423	2.355	2.300	2.255	2.183	2.108	2.027	1.984	1.939	1.892	1.842	1.790	1.733
25	4.242	3.385	2.991	2.759	2.603	2.490	2.405	2.337	2.282	2.237	2.165	2.089	2.008	1.964	1.919	1.872	1.822	1.768	1.711
26	4.225	3.369	2.975	2.743	2.587	2.474	2.388	2.321	2.266	2.220	2.148	2.072	1.990	1.946	1.901	1.853	1.803	1.749	1.691
27	4.210	3.354	2.960	2.728	2.572	2.459	2.373	2.305	2.250	2.204	2.132	2.056	1.974	1.930	1.884	1.836	1.785	1.731	1.672
28	4.196	3.340	2.947	2.714	2.558	2.445	2.359	2.291	2.236	2.190	2.118	2.041	1.959	1.915	1.869	1.820	1.769	1.714	1.654
29	4.183	3.328	2.934	2.701	2.545	2.432	2.346	2.278	2.223	2.177	2.105	2.028	1.945	1.901	1.854	1.806	1.754	1.698	1.638
30	4.171	3.316	2.922	2.690	2.534	2.421	2.334	2.266	2.211	2.165	2.092	2.015	1.932	1.887	1.841	1.792	1.740	1.684	1.622
40	4.085	3.232	2.839	2.606	2.450	2.336	2.249	2.180	2.124	2.077	2.004	1.925	1.839	1.793	1.744	1.693	1.637	1.577	1.509
60	4.001	3.150	2.758	2.525	2.368	2.254	2.167	2.097	2.040	1.993	1.917	1.836	1.748	1.700	1.649	1.594	1.534	1.467	1.389
120	3.920	3.072	2.680	2.447	2.290	2.175	2.087	2.016	1.959	1.911	1.834	1.751	1.659	1.608	1.554	1.495	1.429	1.352	1.254
1000+	3.842	2.996	2.605	2.372	2.214	2.099	2.010	1.938	1.880	1.831	1.752	1.666	1.571	1.517	1.459	1.394	1.318	1.221	1.000

BILLING CODE 6560–50–C

(h) *Slope.* Calculate a least-squares regression slope, a_{1y}, as follows:

$$a_{1y} = \frac{\sum_{i=1}^{N}\left(y_i - \bar{y}\right)\cdot\left(y_{refi} - \bar{y}_{ref}\right)}{\sum_{i=1}^{N}\left(y_{refi} - \bar{y}_{ref}\right)^2} \qquad \text{Eq. 1065.602-9}$$

Example:
N = 6000
$y_1 = 2045.8$
$\bar{y} = 1051.1$
$y_{ref\ 1} = 2045.0$
$\bar{y}_{ref} = 1055.3$

$$a_{iy} = \frac{(2045.8 - 1050.1)\cdot(2045.0 - 1055.3) + \ldots + \left(y_{6000} - 1050.1\right)\cdot\left(y_{ref6000} - 1055.3\right)}{(2045.0 - 1055.3)^2 + \ldots + \left(y_{ref6000} - 1055.3\right)^2}$$

$a_{1y} = 1.0110$

(i) *Intercept.* Calculate a least-squares regression intercept, a_{0y}, as follows:

$$a_{0y} = \bar{y} - \left(a_{1y}\cdot\bar{y}_{ref}\right) \qquad \text{Eq. 1065.602-10}$$

Example:
$\bar{y} = 1050.1$
$a_{1y} = 1.0110$
$\bar{y}_{ref} = 1055.3$
$a_{0y} = 1050.1 - (1.0110 \cdot 1055.3)$
$a_{0y} = 16.8083$

(j) *Standard estimate of error.* Calculate a standard estimate of error, SEE, as follows:

$$SEE_y = \frac{\sqrt{\sum_{i=1}^{N}\left[y_i - a_{0y} - \left(a_{1y}\cdot y_{refi}\right)\right]^2}}{N-2} \qquad \text{Eq. 1065.602-11}$$

Example:
N = 6000
$y_1 = 2045.8$
$a_{0y} = -16.8083$
$a_{1y} = 1.0110$
$y_{ref1} = 2045.0$

$$SEE_y = \sqrt{\frac{\left[2045.8 - (-16.8083) - (1.0110\cdot 2045.0)\right]^2 + \ldots\left[y_{6000} - (-16.8083) - \left(1.0110\cdot y_{ref\,6000}\right)\right]^2}{6000-2}}$$

$SEE_y = 5.348$

(k) *Coefficient of determination.* Calculate a coefficient of determination, r^2, as follows:

$$r_y^2 = 1 - \frac{\sum_{i=1}^{N}\left[y_i - a_{0y} - \left(a_{1y}\cdot y_{refi}\right)\right]^2}{\sum_{i=1}^{N}\left[y_i - \bar{y}\right]^2} \qquad \text{Eq. 1065.602-12}$$

Example:
N = 6000
$y_1 = 2045.8$
$a_{0y} = 16.8083$
$a_{1y} = 1.0110$
$y_{ref1} = 2045.0$
$\bar{y} = 1480.5$

$$r_y^2 = 1 - \frac{\left[2045.8 - (-16.8083) - (1.0110 \times 2045.0)\right]^2 + K\ \left[y_{6000} - (-16.8083) - \left(1.0110 \cdot y_{ref6000}\right)\right]^2}{\left[2045.8 - 1480.5\right]^2 + K\ \left[y_{6000} - 1480.5\right]^2}$$

$$r_y^2 = 0.9859$$

(l) *Flow-weighted mean concentration.* In some sections of this part, you may need to calculate a flow-weighted mean concentration to determine the applicability of certain provisions. A flow-weighted mean is the mean of a quantity after it is weighted proportional to a corresponding flow rate. For example, if a gas concentration is measured continuously from the raw exhaust of an engine, its flow-weighted mean concentration is the sum of the products of each recorded concentration times its respective exhaust molar flow rate, divided by the sum of the recorded flow rate values. As another example, the bag concentration from a CVS system is the same as the flow-weighted mean concentration because the CVS system itself flow-weights the bag concentration. You might already expect a certain flow-weighted mean concentration of an emission at its standard based on previous testing with similar engines or testing with similar equipment and instruments. If you need to estimate your expected flow-weighted mean concentration of an emission at its standard, we recommend using the following examples as a guide for how to estimate the flow-weighted mean concentration expected at the standard. Note that these examples are not exact and that they contain assumptions that are not always valid. Use good engineering judgement to determine if you can use similar assumptions.

(1) To estimate the flow-weighted mean raw exhaust NO_X concentration from a turbocharged heavy-duty compression-ignition engine at a NO_X standard of 2.5 g/(kW·hr), you may do the following:

(i) Based on your engine design, approximate a map of maximum torque versus speed and use it with the applicable normalized duty cycle in the standard-setting part to generate a reference duty cycle as described in § 1065.610. Calculate the total reference work, W_{ref}, as described in § 1065.650. Divide the reference work by the duty cycle's time interval, $\Delta t_{dutycycle}$, to determine mean reference power, $\bar{P}_{ref}$.

(ii) Based on your engine design, estimate maximum power, P_{max}, the design speed at maximum power, f_{nmax}, the design maximum intake manifold boost pressure, p_{inmax}, and temperature, T_{inmax}. Also, estimate an mean fraction of power that is lost due to friction and pumping, $\bar{P}_{frict}$. Use this information along with the engine displacement volume, V_{disp}, an approximate volumetric efficiency, η_V, and the number of engine strokes per power stroke (2-stroke or 4-stroke), N_{stroke} to estimate the maximum raw exhaust molar flow rate, $\dot{n}_{exhmax}$.

(iii) Use your estimated values as described in the following example calculation:

$$\bar{x}_{exp} = \frac{e_{std} \cdot W_{ref}}{M \cdot \dot{n}_{exhmax} \cdot \Delta t_{duty\ cycle} \cdot \left(\frac{\bar{P}_{ref} + \left(\bar{P}_{frict} \cdot P_{max}\right)}{P_{max}}\right)} \qquad \text{Eq. 1065.602-13}$$

$$\dot{n}_{exhmax} = \frac{p_{max} \cdot V_{disp} \cdot f_{nmax} \cdot \frac{2}{N_{stroke}} \cdot \eta_v}{R \cdot T_{max}} \qquad \text{Eq. 1065.602-14}$$

Example:

e_{NOX} = 2.5 g/(kW · hr)
W_{ref} = 11.883 kW · hr
M_{NOx} = 46.0055 g/mol = 46.0055 · 10^{-6} g/μmol
$\Delta t_{dutycycle}$ = 20 min = 1200 s
$\bar{P}_{ref}$ = 35.65 kW
$\bar{P}_{frict}$ = 15%
P_{max} = 125 kW
p_{max} = 300 kPa = 300000 Pa
V_{disp} = 3.011 = 0.0030 m^3
f_{nmax} = 2800 rev/min = 46.67 rev/s
N_{stroke} = 4 1/rev
η_V = 0.9
R = 8.314472 J/(mol·K)
T_{max} = 348.15 K

$$\dot{n}_{exhmax} = \frac{300 \cdot 3.0 \cdot 47.67 \cdot \frac{2}{4} \cdot 0.9}{8.314472 \cdot 348.15}$$

$\dot{n}_{exhmax}$ = 6.53 mol/s

$$\bar{x}_{exp} = \frac{2.5 \cdot 11.883}{46.0055 \cdot 10^{-6} \cdot 6.53 \cdot 1200 \cdot \left(\frac{35.65 + (0.15 \cdot 125)}{125}\right)}$$

$\bar{X}_{exp}$ = 189.4 μmol/mol

(2) To estimate the flow-weighted mean NMHC concentration in a CVS from a naturally aspirated nonroad spark-ignition engine at an NMHC standard of 0.5 g/(kW·hr), you may do the following:

(i) Based on your engine design, approximate a map of maximum torque versus speed and use it with the applicable normalized duty cycle in the standard-setting part to generate a reference duty cycle as described in § 1065.610. Calculate the total reference work, W_{ref}, as described in § 1065.650.

(ii) Multiply your CVS total molar flow rate by the time interval of the duty cycle, $\Delta t_{dutycycle}$. The result is the total diluted exhaust flow of the n_{dexh}.

(iii) Use your estimated values as described in the following example calculation:

$$\bar{x}_{NMHC} = \frac{e_{std} \cdot W_{ref}}{M \cdot \dot{n}_{dexh} \cdot \Delta t_{duty\ cycle}} \qquad \text{Eq. 1065.602-15}$$

Example:

e_{NMHC} = 1.5 g/(kW·hr)

W_{ref} = 5.389 kW·hr

M_{NMHC} = 13.875389 g/mol = 13.875389 · 10^{-6} g/μmol

$\dot{n}_{dexh}$ = 6.021 mol/s

$\Delta t_{dutycycle}$ = 30 min = 1800 s

$$\bar{x}_{NMHC} = \frac{1.5 \cdot 5.389}{13.875389 \cdot 10^{-6} \cdot 6.021 \cdot 1800}$$

$\bar{X}_{NMHC}$ = 53.8 μmol/mol

§ 1065.610 Duty cycle generation.

This section describes how to generate duty cycles that are specific to your engine, based on the normalized duty cycles in the standard-setting part. During an emission test, use a duty cycle that is specific to your engine to command engine speed, torque, and power, as applicable, using an engine dynamometer and an engine operator demand. Paragraph (a) of this section describes how to ''normalize'' your engine's map to determine the maximum test speed and torque for your engine. The rest of this section describes how to use these values to ''denormalize'' the duty cycles in the standard-setting parts, which are all published on a normalized basis. Thus, the term ''normalized'' in paragraph (a) of this section refers to different values than it does in the rest of the section.

(a) *Maximum test speed, f_{ntest}.* This section generally applies to duty cycles for variable-speed engines. For constant-speed engines subject to duty cycles that specify normalized speed commands, use the no-load governed speed as the measured f_{ntest}. This is the highest engine speed where an engine outputs zero torque. For variable-speed engines, determine the measured f_{ntest} from the power-versus-speed map, generated according to § 1065.510, as follows:

(1) Based on the map, determine maximum power, P_{max}, and the speed at which maximum power occurred, f_{nPmax}. Divide every recorded power by P_{max} and divide every recorded speed by f_{nPmax}. The result is a normalized power-versus-speed map. Your measured f_{ntest} is the speed at which the sum of the squares of normalized speed and power is maximum, as follows:

$$f_{ntest} = f_{ni} \text{ at the maximum of } \left(f_{nnormi}^{2} + P_{normi}^{2}\right) \qquad \text{Eq. 1065.610-1}$$

Where:

f_{ntest} = maximum test speed.

i = an indexing variable that represents one recorded value of an engine map.

f_{nnormi} = an engine speed normalized by dividing it by f_{nPmax}.

P_{normi} = an engine power normalized by dividing it by P_{max}.

Example:

(f_{nnorm1} = 1.002, P_{norm1} = 0.978, f_{n1} = 2359.71)

(f_{nnorm2} = 1.004, P_{norm2} = 0.977, fn_2 = 2364.42)

(f_{nnorm3} = 1.006, P_{norm3} = 0.974, f_{n3} = 2369.13)

($f_{nnorm1}^2 + P_{norm1}^2$) = ($1.002^2 + 0.978^2$) = 1.960

($f_{nnorm1}^2 + P_{norm1}^2$) = ($1.004^2 + 0.977^2$) = 1.963

($f_{nnorm1}^2 + P_{norm1}^2$) = ($1.006^2 + 0.974^2$) = 1.961 maximum = 1.963 at i = 2

f_{ntest} = 2364.42 rev/min

(2) For variable-speed engines, transform normalized speeds to reference speeds according to paragraph (c) of this section by using the measured maximum test speed determined according to paragraph (a)(1) of this section—or use your declared maximum test speed, as allowed in § 1065.510.

(3) For constant-speed engines, transform normalized speeds to reference speeds according to paragraph (c) of this section by using the measured no-load governed—speed or use your declared maximum test speed, as allowed in § 1065.510.

(b) *Maximum test torque, T_{test}.* For constant-speed engines, determine the measured T_{test} from the power-versus-speed map, generated according to § 1065.510, as follows:

(1) Based on the map, determine maximum power, P_{max}, and the speed at which maximum power occurs, F_{nPmax}. Divide every recorded power by P_{max} and divide every recorded speed by F_{nPmax}. The result is a normalized power-versus-speed map. Your measured T_{test} is the speed at which the sum of the squares of normalized speed and power is maximum, as follows:

$$T_{test} = T_i \text{ at the maximum of } \left(f_{nnormi}^{2} + P_{normi}^{2}\right) \qquad \text{Eq. 1065.610-2}$$

Where:

T_{test} = maximum test torque.

Example:

(f_{nnorm1} = 1.002, P_{norm1} = 0.978, T_1 = 722.62 N·m)

(f_{nnorm2} = 1.004, P_{norm2} = 0.977, T_2 = 720.44 N·m)

(f_{nnorm3} = 1.006, P_{norm3} = 0.974, T_3 = 716.80 N·m)

($f_{nnorm1}^2 + P_{norm1}^2$) = ($1.002_2 + 0.978_2$) = 1.960

($f_{nnorm1}^2 + P_{norm1}^2$) = ($1.004^2 + 0.977^2$) = 1.963

($f_{nnorm1}^2 + P_{norm1}^2$) = ($1.006^2 + 0.974^2$) = 1.961 maximum = 1.963 at i = 2

T_{test} = 720.44 N·m

(2) Transform normalized torques to reference torques according to paragraph (d) of this section by using the measured maximum test torque determined according to paragraph (b)(1) of this section—or use your declared maximum test torque, as allowed in § 1065.510.

(c) *Generating reference speed values from normalized duty cycle speeds.* Transform normalized speed values to reference values as follows:

(1) *% speed.* If your normalized duty cycle specifies % speed values, use your declared warm idle speed and your maximum test speed to transform the duty cycle, as follows:

$$f_{nref} = \%\ speed \cdot (f_{ntest} - f_{nidle}) + f_{nidle} \qquad \text{Eq. 1065.610-3}$$

Example:

% speed = 85 %
f_{ntest} = 2364 rev/min
f_{nidle} = 650 rev/min
f_{nref} = 85 % · (2364 650) + 650
f_{nref} = 2107 rev/min

(2) *A, B, and C speeds.* If your normalized duty cycle specifies speeds as A, B, or C values, use your power-versus-speed curve to determine the lowest speed below maximum power at which 50 % of maximum power occurs. Denote this value as n_{lo}. Also determine the highest speed above maximum power at which 70 % of maximum power occurs. Denote this value as n_{hi} Use n_{hi} and n_{lo} to calculate reference values for A, B, or C speeds as follows:

$$f_{nrefA} = 0.25 \cdot (n_{hi} - n_{lo}) + n_{lo} \qquad \text{Eq. 1065.610-4}$$

$$f_{nrefB} = 0.50 \cdot (n_{hi} - n_{lo}) + n_{lo} \qquad \text{Eq. 1065.610-5}$$

$$f_{nrefC} = 0.75 \cdot (n_{hi} - n_{lo}) + n_{lo} \qquad \text{Eq. 1065.610-6}$$

Example:

n_{lo} = 1005 rev/min
n_{hi} = 2385 rev/min
f_{nrefA} = 0.25 · (2385 1005) + 1005
f_{nrefB} = 0.50 · (2385 1005) + 1005
f_{nrefC} = 0.75 · (2385 1005) + 1005
f_{nrefA} = 1350 rev/min
f_{nrefB} = 1695 rev/min
f_{nrefC} = 2040 rev/min

(3) *Intermediate speed.* If your normalized duty cycle specifies a speed as ''intermediate speed,'' use your torque-versus-speed curve to determine the speed at which maximum torque occurs. This is peak torque speed. Identify your reference intermediate speed as one of the following values:

(i) Peak torque speed if it is between (60 and 75) % of maximum test speed.

(ii) 60% of maximum test speed if peak torque speed is less than 60% of maximum test speed.

(iii) 75% of maximum test speed if peak torque speed is greater than 75% of maximum test speed.

(d) *Generating reference torques from normalized duty-cycle torques.* Transform normalized torques to reference torques using your map of maximum torque versus speed.

(1) *Reference torque for variable-speed engines.* For a given speed point, multiply the corresponding % torque by the maximum torque at that speed, according to your map. Linearly interpolate mapped torque values to determine torque between mapped speeds. The result is the reference torque for each speed point.

(2) *Reference torque for constant-speed engines.* Multiply a % torque value by your maximum test torque. The result is the reference torque for each point. Note that if your constant-speed engine is subject to duty cycles that specify normalized speed commands, use the provisions of paragraph (d)(1) of this section to transform your normalized torque values.

(3) *Permissible deviations for any engine.* If your engine does not operate below a certain minimum torque under normal in-use conditions, you may use a declared minimum torque as the reference value instead of any value denormalized to be less than the declared value. For example, if your engine is connected to an automatic transmission, it may have a minimum torque called curb idle transmission torque (CITT). In this case, at idle conditions (*i.e.*, 0% speed, 0% torque), you may useCITT as a reference value instead of 0 N·m.

(e) *Generating reference power values from normalized duty cycle powers.* Transform normalized power values to reference speed and power values using your map of maximum power versus speed.

(1) First transform normalized speed values into reference speed values. For a given speed point, multiply the corresponding % power by the maximum test power defined in the standard-setting part. The result is the reference power for each speed point. You may calculate a corresponding reference torque for each point and command that reference torque instead of a reference power.

(2) If your engine does not operate below a certain power under normal in-use conditions, you may use a declared minimum power as the reference value instead of any value denormalized to be less than the declared value. For example, if your engine is directly connected to a propeller, it may have a minimum power called idle power. In this case, at idle conditions (*i.e.*, 0% speed, 0% power), you may use a corresponding idle power as a reference power instead of 0 kW.

§ 1065.630 1980 international gravity formula.

The acceleration of Earth's gravity, a_g, varies depending on your location. Calculate a_g at your latitude, as follows:

$$a_g = 9.7803267715 \cdot [1 + s$$
$$5.2790414 \cdot 10^{-3} \cdot \sin^2(\theta) +$$
$$2.32718 \cdot 10^{-5} \cdot \sin^4(\theta) +$$
$$1.262 \cdot 10^{-7} \cdot \sin^6(\theta) +$$
$$7 \cdot 10^{-10} \cdot \sin^8(\theta)] \qquad \text{Eq. 1065.630-1}$$

Where:

θ = Degrees north or south latitude.

Example:

θ = 45°
a_g = 9.7803267715 · (1+
5.2790414 · 10^{-3} · $\sin^2$ (45) +
2.32718 · 10^{-5} ·$\sin^4$ (45) +
1.262 · 10^{-7} ·$\sin^6$ (45) +
7 · 10^{-10} ·$\sin^8$ (45)
a_g = 9.8178291229 m/s^2

§ 1065.640 Flow meter calibration calculations.

This section describes the calculations for calibrating various flow meters. After you calibrate a flow meter using these calculations, use the calculations described in § 1065.642 to calculate flow during an emission test. Paragraph (a) of this section first describes how to convert reference flow meter outputs for use in the calibration equations, which are presented on a molar basis. The remaining paragraphs describe the calibration calculations that are specific to certain types of flow meters.

(a) *Reference meter conversions.* The calibration equations in this section use molar flow rate, $\dot{n}_{ref}$, as a reference quantity. If your reference meter outputs a flow rate in a different quantity, such as standard volume rate, $\dot{V}_{stdref}$, actual volume rate, $\dot{V}_{actref}$, or mass rate, $\dot{m}_{ref}$, convert your reference meter output to a molar flow rate using the following equations, noting that while values for volume rate, mass rate, pressure, temperature, and molar mass may change during an emission test, you should ensure that they are as constant as practical for each individual set point during a flow meter calibration:

$$\dot{n}_{ref} = \frac{\dot{V}_{stdref} \cdot P_{std}}{T_{std} \cdot R} = \frac{V_{actref} \cdot P_{act}}{T_{act} \cdot R} = \frac{\dot{m}_{ref}}{M_{mix}} \qquad \text{Eq.1065.640-1}$$

Where:

$\dot{n}_{ref}$ = reference molar flow rate.
$\dot{V}_{stdref}$ = reference volume flow rate, corrected to a standard pressure and a standard temperature.
$\dot{V}_{actref}$ = reference volume flow rate at the actual pressure and temperature of the flow rate.
$\dot{m}_{ref}$ = reference mass flow.
P_{std} = standard pressure.
P_{act} = actual pressure of the flow rate.
T_{std} = standard temperature.
T_{act} = actual temperature of the flow rate.
R = molar gas constant.
M_{mix} = molar mass of the flow rate.

Example 1:

$\dot{V}_{stdref}$ = 1000.00 ft³/min = 0.471948 m/s
P = 29.9213 in Hg @ 32 °F = 101325 Pa
T = 68.0 °F = 293.15 K
R = 8.314472 J/(mol·K)

$$\dot{n}_{ref} = \frac{0.471948 \cdot 101325}{293.15 \cdot 8.314472}$$

$\dot{n}_{ref}$ = 19.169 mol/s

Example 2:

$\dot{m}_{ref}$ = 17.2683 kg/min = 287.805 g/s
M_{mix} = 28.7805 g/mol

$$\dot{n}_{ref} = \frac{287.05}{28.7805}$$

$\dot{n}_{ref}$ =10.0000 mol/s

(b) *PDP calibration calculations.* For each restrictor position, calculate the following values from the mean values determined in § 1065.340, as follows:

(1) PDP volume pumped per revolution, V_{rev} (m³/rev):

$$v_{rev} = \frac{\bar{\dot{n}}_{ref} \cdot R \cdot \bar{T}_{in}}{\bar{P}_{in} \cdot \bar{f}_{nPDP}} \qquad \text{Eq. 1065.640-2}$$

Example:

$\dot{n}_{ref}$ = 25.096 mol/s
R = 8.314472 J/(mol·K)
$\bar{T}_{in}$ = 299.5 K
$\bar{P}_{in}$ = 98290 Pa
$\bar{f}_{nPDP}$ = 1205.1 rev/min = 20.085 rev/s

$$V_{rev} = \frac{25.096 \cdot 8.314472 \cdot 299.5}{98290 \cdot 20.085}$$

V_{rev} = 0.03166 m³/rev

(2) PDP slip correction factor, K_s (s/rev):

$$K_s = \frac{1}{\bar{f}_{rPDP}} \cdot \sqrt{\frac{\bar{P}_{out} - \bar{P}_{in}}{\bar{P}_{out}}} \qquad \text{Eq. 1065.640-3}$$

Example:

$\bar{f}_{nPDP}$ = 1205.1 rev/min = 20.085 rev/s
$\bar{P}_{out}$ = 100.103 kPa
$\bar{P}_{in}$= 98.290 kPa

$$K_s = \frac{1}{20.085} \cdot \sqrt{\frac{100.103 - 98.290}{100.103}}$$

K_s = 0.006700 s/rev

(3) Perform a least-squares regression of PDP volume pumped per revolution, V_{rev}, versus PDP slip correction factor, K_s, by calculating slope, a_1, and intercept, a_0, as described in § 1065.602.

(4) Repeat the procedure in paragraphs (b)(1) through (3) of this section for every speed that you run your PDP.

(5) The following example illustrates these calculations:

TABLE 1 OF § 1065.640.—EXAMPLE OF PDP CALIBRATION DATA

$\bar{f}_{nPDP}$	a_1	a_0
755.0	50.43	0.056
987.6	49.86	−0.013
1254.5	48.54	0.028
1401.3	47.30	−0.061

(6) For each speed at which you operate the PDP, use the corresponding slope, a_1, andintercept, a_o, to calculate flow rate during emission testing as described in § 1065.642.

(c) *Venturi governing equations and permissible assumptions.* This section describes the governing equations and permissible assumptions for calibrating a venturi and calculating flow using a venturi. Because a subsonic venturi (SSV) and a critical-flow venturi (CFV) both operate similarly, their governing equations are nearly the same, except for the equation describing their pressure ratio, r (*i.e.*, r_{SSV} versus r_{CFV}). These governing equations assume one-dimensional isentropic inviscid compressible flow of an ideal gas. In paragraph (c)(4) of this section, we describe other assumptions that you may make, depending upon how you conduct your emission tests. If we do not allow you to assume that the measured flow is an ideal gas, the governing equations include a first-order correction for the behavior of a real gas; namely, the compressibility factor, Z. If good engineering judgment dictates using a value other than Z=1, you may either use an appropriate equation of state to determine values of Z as a function of measured pressures and temperatures, or you may develop your own calibration equations based on good engineering judgment. Note that the equation for the flow coefficient, C_f, is based on the ideal gas assumption that the isentropic exponent, γ, is equal to the ratio of specific heats, C_p/C_v. If good engineering judgment dictates using a real gas isentropic exponent, you may either use an appropriate equation of state to determine values of γ as a function of measured pressures and temperatures, or you may develop your own calibration equations based on good engineering judgment. Calculate molar flow rate, $\dot{n}$, as follows:

$$\dot{n} = C_d \cdot C_f \cdot \frac{A_t \cdot p_{in}}{\sqrt{Z \cdot M_{mix} \cdot R \cdot T_{in}}} \qquad \text{Eq. 1065.640-4}$$

Where:

C_d = Discharge coefficient, as determined in paragraph (c)(1) of this section.

C_f = Flow coefficient, as determined in paragraph (c)(2) of this section.

A_t = Venturi throat cross-sectional area.

P_{in} = Venturi inlet absolute static pressure.

Z = Compressibility factor.

M_{mix} = Molar mass of gas mixture.

R = Molar gas constant.

T_{in} = Venturi inlet absolute temperature.

(1) Using the data collected in § 1065.340, calculate C_d using the following equation:

$$C_d = \dot{n}_{ref} \cdot \frac{\sqrt{Z \cdot M_{mix} \cdot R \cdot T_{in}}}{C_f \cdot A_t \cdot p_{in}} \qquad \text{Eq. 1065.640-5}$$

Where:

$\dot{n}_{ref}$ = A reference molar flow rate.

(2) Determine C_f using one of the following methods:

(i) For CFV flow meters only, determine C_{fCFV} from the following table based on your values for βb and γ, using linear interpolation to find intermediate values:

TABLE 2 OF § 1065.640.—C_{fCFV} VERSUS β AND γ FOR CFV FLOW METERS

C_{fCFV}		$\gamma_{dexh} = \gamma_{air} =$ 1.399
β	γ_{exh} = 1.385	
0.000	0.6822	0.6846

TABLE 2 OF § 1065.640.—C_{fCFV} VERSUS β AND γ FOR CFV FLOW METERS—Continued

C_{fCFV}		$\gamma_{dexh} = \gamma_{air} =$ 1.399
β	γ_{exh} = 1.385	
0.400	0.6857	0.6881
0.500	0.6910	0.6934
0.550	0.6953	0.6977
0.600	0.7011	0.7036
0.625	0.7047	0.7072
0.650	0.7089	0.7114
0.675	0.7137	0.7163
0.700	0.7193	0.7219
0.720	0.7245	0.7271
0.740	0.7303	0.7329
0.760	0.7368	0.7395
0.770	0.7404	0.7431

TABLE 2 OF § 1065.640.—C_{fCFV} VERSUS β AND γ FOR CFV FLOW METERS—Continued

C_{fCFV}		$\gamma_{dexh} = \gamma_{air} =$ 1.399
β	γ_{exh} = 1.385	
0.780	0.7442	0.7470
0.790	0.7483	0.7511
0.800	0.7527	0.7555
0.810	0.7573	0.7602
0.820	0.7624	0.7652
0.830	0.7677	0.7707
0.840	0.7735	0.7765
0.850	0.7798	0.7828

(ii) For any CFV or SSV flow meter, you may use the following equation to calculate C_f:

$$C_f = \left[\frac{2 \cdot \gamma \cdot \left(r^{\frac{\gamma-1}{\gamma}} - 1 \right)}{(\gamma - 1) \cdot \left(\beta^4 - r^{\frac{-2}{\gamma}} \right)} \right]^{\frac{1}{2}} \qquad \text{Eq. 1065.640-6}$$

Where:

γ = isentropic exponent. For an ideal gas, this is the ratio of specific heats of the gas mixture, C_p/C_v.

r = Pressure ratio, as determined in paragraph (c)(3) of this section.

β = Ratio of venturi throat to inlet diameters.

(3) Calculate r as follows:

(i) For SSV systems only, calculate r_{SSV} using the following equation:

$$r_{SSV} = 1 - \frac{\Delta p}{p_{in}} \qquad \text{Eq. 1065.640-7}$$

Where:

Δ_{pSSV} = Differential static pressure; venturi inlet minus venturi throat.

(ii) For CFV systems only, calculate r_{CFV} iteratively using the following equation:

$$r_{CFV}^{\frac{1-\gamma}{\gamma}} + \left(\frac{\gamma - 1}{2} \right) \cdot \beta^4 \cdot r_{CFV}^{\frac{2}{\gamma}} = \frac{\gamma + 1}{2} \qquad \text{Eq. 1065.640-8}$$

(4) You may make any of the following simplifying assumptions of the governing equations, or you may use good engineering judgment to develop more appropriate values for your testing:

(i) For emission testing over the full ranges of raw exhaust, diluted exhaust and dilution air, you may assume that the gas mixture behaves as an ideal gas: Z=1.

(ii) For the full range of raw exhaust you may assume a constant ratio of specific heats of γ =1.385.

(iii) For the full range of diluted exhaust and air (e.g., calibration air or dilution air), you may assume a constant ratio of specific heats of $\gamma = 1.399$.

(iv) For the full range of diluted exhaust and air, you may assume the molar mass of the mixture is a function only of the amount of water in the dilution air or calibration air, x_{H2O}, determined as described in § 1065.645, as follows:

$$M_{mix} = M_{air} \cdot (1 - x_{H2O}) + M_{H2O} \cdot x_{H2O} \qquad \text{Eq. 1065.640-9}$$

Example:

$M_{air} = 28.96559$ g/mol

$x_{H2O} = 0.0169$ mol/mol

$M_{H2O} = 18.01528$ g/mol

$M_{mix} = 28.96559 \times (1\ 0.0169) + 18.01528 \times 0.0169$

$M_{mix} = 28.7805$ g/mol

(v) For the full range of diluted exhaust and air, you may assume a constant molar mass of the mixture, M_{mix}, for all calibration and all testing as long as your assumed molar mass differs no more than ±1% from the estimated minimum and maximum molar mass during calibration and testing. You may assume this, using good engineering judgment, if you sufficiently control the amount of water in calibration air and in dilution air or if you remove sufficient water from both calibration air and dilution air. The following table gives examples of permissible ranges of dilution air dewpoint versus calibration air dewpoint:

TABLE 3 OF § 1065.640.—EXAMPLES OF DILUTION AIR AND CALIBRATION AIR DEWPOINTS AT WHICH YOU MAY ASSUME A CONSTANT M_{mix}.

If calibration T_{dew} (°C) is...	assume the following constant M_{mix} (g/mol)...	for the following ranges of T_{dew} (°C) during emission tests[a]
dry	28.96559	dry to 18.
0	28.89263	dry to 21.
5	28.86148	dry to 22.
10	28.81911	dry to 24.
15	28.76224	dry to 26.
20	28.68685	−8 to 28.
25	28.58806	12 to 31.
30	28.46005	23 to 34.

[a] Range valid for all calibration and emission testing over the atmospheric pressure range (80.000 to 103.325) kPa.

(5) The following example illustrates the use of the governing equations to calculate the discharge coefficient, C_d of an SSV flow meter at one reference flow meter value. Note that calculating C_d for a CFV flow meter would be similar, except that C_f would be determined from Table 1 of this section or calculated iteratively using values of β and γ as described in paragraph (c)(2) of this section.

Example:

$\dot{n}_{ref} = 57.625$ mol/s

$Z = 1$

$M_{mix} = 28.7805$ g/mol $= 0.0287805$ kg/mol

$R = 8.314472$ J/(mol·K)

$T_{in} = 298.15$ K

$A_t = 0.01824$ m^2

$p_{in} = 99132.0$ Pa

$\gamma = 1.399$

$\beta = 0.8$

$\Delta p = 2.312$ kPa

$$r_{SSV} = 1 - \frac{2.312}{99.132} = 0.977$$

$$C_f = \left[\frac{2 \cdot 1.399 \cdot \left(0.977^{\frac{1.399-1}{1.399}} - 1 \right)}{(1.399 - 1) \cdot \left(0.8^4 - 0.977^{\frac{-2}{1.399}} \right)} \right]^{\frac{1}{2}}$$

$C_f = 0.274$

$$C_d = 57.625 \cdot \frac{\sqrt{1 \cdot 0.0287805 \cdot 8.314472 \cdot 298.15}}{0.274 \cdot 0.01824 \cdot 99132.0}$$

$C_d = 0.981$

(d) *SSV calibration.* Perform the following steps to calibrate an SSV flow meter:

(1) Calculate the Reynolds number, $Re_{\#}$, for each reference molar flow rate, using the throat diameter of the venturi, d_t. Because the dynamic viscosity, μ, is needed to compute $Re_{\#}$, you may use your own fluid viscosity model to determine μ for your calibration gas (usually air), using good engineering judgment. Alternatively, you may use the Sutherland three-coefficient viscosity model to approximate μ, as shown in the following sample calculation for $Re_{\#}$:

$$Re^{\#} = \frac{4 \cdot M_{mix} \cdot \dot{n}_{ref}}{\pi \cdot d_t \cdot \mu} \qquad \text{Eq. 1065.640-10}$$

Where, using the Sutherland three-coefficient viscosity model:

$$\mu = \mu_0 \cdot \left(\frac{T_{in}}{T_0}\right)^{\frac{3}{2}} \cdot \left(\frac{T_0 + S}{T_{in} + S}\right) \qquad \text{Eq. 1065.640-11}$$

Where:

μ = Dynamic viscosity of calibration gas.

μ_0 = Sutherland reference viscosity.

T_0 = Sutherland reference temperature.

S = Sutherland constant.

TABLE 3 OF § 1065.640.—SUTHERLAND THREE-COEFFICIENT VISCOSITY MODEL PARAMETERS

Gas [a]	μ_0 kg/(m · s)	T_0 K	S K	Temp range within ± 2% error K	Pressure limit kPa
Air	$1.716 \cdot 10^{-5}$	273	111	170 to 1900	≤ 1800
CO_2	$1.370 \cdot 10_{-5}$	273	222	190 to 1700	≤ 3600
H_2O	$1.12 \cdot 10^{-5}$	350	1064	360 to 1500	≤ 10000
O_2	$1.919 \cdot 10^{-5}$	273	139	190 to 2000	≤ 2500
N_2	$1.663 \cdot 10^{-5}$	273	107	100 to 1500	≤ 1600

[a] Use tabulated parameters only for the pure gases, as listed. Do not combine parameters in calculations to calculate viscosities of gas mixtures.

Example:

$\mu_0 = 1.7894 \cdot 10^{-5}$ kg/(m·s)

$T_0 = 273.11$ K

S = 110.56 K

$$\mu = 1.7894 \cdot 10^{-5} \cdot \left(\frac{298.15}{273.11}\right)^{\frac{3}{2}} \cdot \left(\frac{273.11 + 110.56}{298.15 + 110.56}\right)$$

$\mu = 1.916 \cdot 10^{-5}$ kg/(m·s)

$M_{mix} = 28.7805$ g/mol

$\dot{n}_{ref} = 57.625$ mol/s

$d_t = 152.4$ mm

$T_{in} = 298.15$ K

$$Re^{\#} = \frac{4 \cdot 28.7805 \cdot 57.625}{3.14159 \cdot 152.4 \cdot 1.916 \cdot 10^{-5}}$$

$Re^{\#} = 7.2317 \cdot 10^5$

(2) Create an equation for C_d versus $Re^{\#}$, using paired values of ($Re^{\#}$, C_d). For the equation, you may use any mathematical expression, including a polynomial or a power series. The following equation is an example of a commonly used mathematical expression for relating C_d and $Re^{\#}$:

$$C_d = a_0 - a_1 \cdot \sqrt{\frac{10^6}{Re^{\#}}} \qquad \text{Eq. 1065.640-12}$$

(3) Perform a least-squares regression analysis to determine the best-fit coefficients to the equation and calculate the equation's regression statistics, SEE and r^2, accordingto § 1065.602.

(4) If the equation meets the criteria of SEE < 0.5% · $\dot{n}_{refmax}$ and $r^2 \geq 0.995$, you may use the equation to determine C_d for emission tests, as described in § 1065.642.

(5) If the SEE and r^2 criteria are not met, you may use good engineering judgment to omit calibration data points to meet the regression statistics. You must use at least seven calibration data points to meet the criteria.

(6) If omitting points does not resolve outliers, take corrective action. For example, select another mathematical expression for the C_d versus $Re^{\#}$ equation, check for leaks, or repeat the calibration process. If you must repeat the process, we recommend applying tighter tolerances to measurements and allowing more time for flows to stabilize.

(7) Once you have an equation that meets the regression criteria, you may use the equation only to determine flow rates that are within the range of the reference flow rates used to meet the C_d versus $Re^{\#}$ equation's regression criteria.

(e) *CFV calibration.* Some CFV flow meters consist of a single venturi and some consist of multiple venturis, where different combinations of venturis are used to meter different flow rates. For CFV flow meters that consist of multiple venturis, either calibrate each venturi independently to determine a separate discharge coefficient, C_d, for each venturi, or calibrate each combination of venturis as one venturi. In the case where you calibrate a combination of venturis, use the sum of the active venturi throat areas as A_t, the sum of the active venturi throat diameters as d_t, and the ratio of venturi throat to inlet diameters as the ratio of the sum of the active venturi throat diameters to the diameter of the common entrance to all of the venturis. To determine the C_d for a single venturi or a single combination of venturis, perform the following steps:

(1) Use the data collected at each calibration set point to calculate an individual C_d for each point using Eq. 1065.640–4.

(2) Calculate the mean and standard deviation of all the C_d values according to Eqs. 1065.602–1 and 1065.602–2.

(3) If the standard deviation of all the C_d values is less than or equal to 0.3% of the mean C_d, then use the mean C_d in Eq 1065.642–6, and use the CFV only down to the lowest Δp_{CFV} measured during calibration.

(4) If the standard deviation of all the C_d values exceeds 0.3% of the mean C_d, omit the C_d values corresponding to the data point collected at the lowest Δp_{CFV} measured during calibration.

(5) If the number of remaining data points is less than seven, take corrective action by checking your calibration data or repeating the calibration process. If you repeat the calibration process, we recommend checking for leaks, applying tighter tolerances to measurements and allowing more time for flows to stabilize.

(6) If the number of remaining C_d values is seven or greater, recalculate

the mean and standard deviation of the remaining C_d values.

(7) If the standard deviation of the remaining C_d values is less than or equal to 0.3 % of the mean of the remaining C_d, use that mean C_d in Eq 1065.642–6, and use the CFV values only down to the lowest Δp_{CFV} associated with the remaining C_d.

(8) If the standard deviation of the remaining C_d still exceeds 0.3% of the mean of the remaining C_d values, repeat the steps in paragraph (e)(4) through (8) of this section.

§ 1065.642 SSV, CFV, and PDP molar flow rate calculations.

This section describes the equations for calculating molar flow rates from various flow meters. After you calibrate a flow meter according to § 1065.640, use the calculations described in this section to calculate flow during an emission test.

(a) *PDP molar flow rate.* Based upon the speed at which you operate the PDP for a test interval, select the corresponding slope, a_1, and intercept, a_0, as calculated in § 1065.640, to calculate molar flow rate, $\dot{n}$, as follows:

$$\dot{n} = f_{nPDP} \cdot \frac{p_{in} \cdot V_{rev}}{R \cdot T_{in}} \qquad \text{Eq. 1065.642-1}$$

Where:

$$V_{rev} = \frac{a_1}{f_{nPDP}} \cdot \sqrt{\frac{p_{out} - p_{in}}{p_{in}} + a_0} \qquad \text{Eq. 1065.642-2}$$

Example:

a_1 = 50.43
f_{nPDP} = 755.0 rev/min = 12.58 rev/s
p_{out} = 99950 Pa
p_{in} = 98575 Pa
a_0 = 0.056
R = 8.314472 J/(mol·K)
T_{in} = 323.5 K
C_p = 1000 (J/m³)/kPa
C_t = 60 s/min

$$V_{rev} = \frac{50.43}{755} \cdot \sqrt{\frac{99950 - 98575}{98575}} + 0.056$$

v_{rev} = 0.06389 m³/rev

$$\dot{n} = 12.58 \cdot \frac{98575 \cdot 0.06389}{8.314472 \cdot 323.5}$$

$\dot{n}$ = 29.464 mol/s

(b) *SSV molar flow rate.* Based on the C_d versus Re# equation you determined according to § 1065.640, calculate SSV molar flow rate, $\dot{n}\dot{n}$ during an emission test as follows:

$$\dot{n} = C_d \cdot C_f \cdot \frac{A_t \cdot p_{in}}{\sqrt{Z \cdot M_{mix} \cdot R \cdot T_{in}}} \qquad \text{Eq. 1065.642-3}$$

Example:

A_t = 0.01824 m²
p_{in} = 99132 Pa
Z = 1
M_{mix} = 28.7805 g/mol = 0.0287805 kg/mol
R = 8.314472 J/(mol·K)
T_{in} = 298.15 K
Re# = $7.232 \cdot 10^5$
γ = 1.399
β = 0.8
Δp = 2.312 kPa
Using Eq. 1065.640–6,
r_{ssv} = 0.997
Using Eq. 1065.640–5,
C_f = 0.274
Using Eq. 1065.640–4,
C_d = 0.990

$$\dot{n} = 0.990 \cdot 0.274 \cdot \frac{0.01824 \cdot 99132}{\sqrt{1 \cdot 0.0287805 \cdot 8.314472 \cdot 298.15}}$$

$\dot{n}$= 58.173 mol/s

(c) *CFV molar flow rate.* Some CFV flow meters consist of a single venturi and some consist of multiple venturis, where different combinations of venturis are used to meter different flow rates. If you use multiple venturis and you calibrated each venturi independently to determine a separate discharge coefficient, C_d, for each venturi, calculate the individual molar flow rates through each venturi and sum all their flow rates to determine $\dot{n}$. If you use multiple venturis and you calibrated each combination of venturis, calculate using the sum of the active venturi throat areas as A_t, the sum of the active venturi throat diameters as d_t, and the ratio of venturi throat to inlet diameters as the ratio of the sum of the active venturi throat diameters to the diameter of the common entrance to all of the venturis. To calculate the molar flow rate through one venturi or one combination of venturis, use its respective mean C_d and other constants you determined according to § 1065.640 and calculate its molar flow rate $\dot{n}$ during an emission test, as follows:

$$\dot{n} = C_d \cdot C_f \cdot \frac{A_t \cdot p_{in}}{\sqrt{Z \cdot M_{mix} \cdot R \cdot T_{in}}} \qquad \text{Eq. 1065.642-6}$$

Example:

C_d = 0.985
C_f = 0.7219
A_t = 0.00456 m²
p_{in} = 98836 Pa
Z = 1
M_{mix} = 28.7805 g/mol = 0.0287805 kg/mol
R = 8.314472 J/(mol·K)
T_{in} = 378.15 K

$$\dot{n} = 0.985 \cdot 0.712 \frac{0.00456 \cdot 98836}{\sqrt{1 \cdot 0.0287805 \cdot 8.314472 \cdot 378.15}}$$

$\dot{n}$ = 33.690 mol/s

§ 1065.645 Amount of water in an ideal gas.

This section describes how to determine the amount of water in an ideal gas, which you need for various performance verifications and emission calculations. Use the equation for the vapor pressure of water in paragraph (a) of this section or another appropriate equation and, depending on whether you measure dewpoint or relative humidity, perform one of the calculations in paragraph (b) or (c) of this section.

(a) *Vapor pressure of water.* Calculate the vapor pressure of water for a given saturation temperature condition, T_{sat}, as follows, or use good engineering judgment to use a different relationship of the vapor pressure of water to a given saturation temperature condition:

(1) For humidity measurements made at ambient temperatures from (0 to 100) °C, or for humidity measurements made over super-cooled water at ambient temperatures from (−50 to 0) °C, use the following equation:

$$-\log_{10}(p_{H20}) = 10.79574 \cdot \left(\frac{273.16}{T_{sat}} - 1\right) + 5.02800 \cdot \log_{10}\left(\frac{T_{sat}}{273.16}\right) + 1.50475 \cdot 10^{-4} \cdot \left(10^{-8.2969 \cdot \left(\frac{T_{sat}}{273.16}\right)} - 1\right) + 0.42873 \cdot 10^{-3} \cdot \left(1 - 10^{4.76955 \cdot \left(1 - \frac{273.16}{T_{sat}}\right)}\right) + 0.21386 \qquad \text{Eq. 1065.645-1}$$

Where:

p_{H20} = vapor pressure of water at saturation temperature condition, kPa.

T_{sat} = saturation temperature of water at measured conditions, K.

Example:

T_{sat} = 9.5 °C

T_{dsat}= 9.5 + 273.15 = 282.65 K

$$-\log_{10}(p_{H20}) = 10.79574 \cdot \left(\frac{273.16}{282.65} - 1\right) + 5.02800 \cdot \log_{10}\left(\frac{282.65}{273.16}\right) + 1.50475 \cdot 10^{-4} \cdot \left(10^{-8.2969 \cdot \left(\frac{282.65}{273.16}\right)} - 1\right) + 0.42873 \cdot 10^{-3} \cdot \left(1 - 10^{4.76955 \cdot \left(1 - \frac{273.16}{282.65}\right)}\right) + 0.21386$$

$-\log_{10}(p_{H20}) = -0.074297$

$p_{H20} = 10^{0.074297} = 1.1866$ kPa

(2) For humidity measurements over ice at ambient temperatures from (−100 to 0) °C, use the following equation:

$$-\log_{10}(p_{sat}) = 9.09685 \cdot \left(\frac{273.16}{T_{sat}} - 1\right) + 3.56654 \cdot \log_{10}\left(\frac{273.16}{T_{sat}}\right) + 0.87682 \cdot \left(\frac{257.75}{T_{sat}} - 1\right) + 0.21386 \qquad \text{Eq. 1065.645-2}$$

Example:

T_{ice} = −15.4 °C

T_{ice} = −15.4 + 273.15 = 257.75 K

$$-\log_{10}(p_{sat}) = 9.09685 \cdot \left(\frac{273.16}{257.75} - 1\right) + 3.56654 \cdot \log_{10}\left(\frac{273.16}{257.75}\right) + 0.87682 \cdot \left(\frac{257.75}{273.16} - 1\right) + 0.21386$$

$-\log_{10}(p_{H20}) = -0.79821$

$p_{H20} = 10^{0.074297} = 0.15941$ kPa

(b) *Dewpoint.* If you measure humidity as a dewpoint, determine the amount of water in an ideal gas, x_{H20}, as follows:

$$x_{H2O} = \frac{p_{H20}}{p_{abs}} \qquad \text{Eq. 1065.645-3}$$

Where:

x_{H20} = amount of water in an ideal gas.

p_{H20} = water vapor pressure at the measured dewpoint, $T_{sat} = T_{dew}$.

p_{abs} = wet static absolute pressure at the location of your dewpoint measurement.

Example:

p_{abs} = 99.980 kPa

$T_{sat} = T_{dew}$ = 9.5 °C

Using Eq. 1065.645–2,

p_{H20} = 1.1866 kPa

x_{H2O} = 1.1866/99.980

x_{H2O} = 0.011868 mol/mol

(c) *Relative humidity.* If you measure humidity as a relative humidity, RH%, determine the amount of water in an ideal gas, x_{H20}, as follows:

$$x_{H2O} = \frac{RH\% \cdot p_{H20}}{p_{abs}} \qquad \text{Eq. 1065.645-4}$$

Where:

x_{H20} = amount of water in an ideal gas.

RH% = relative humidity.

p_{H20} = water vapor pressure at 100% relative humidity at the location of your relative humidity measurement, $T_{sat} = T_{amb}$.

P_{abs} = wet static absolute pressure at the location of your relative humidity measurement.

Example:

RH% = 50.77%

p_{abs} = 99.980 kPa

$T_{sat} = T_{amb}$ = 20 °C

Using Eq. 1065.645–2,

p_{H20} = 2.3371 kPa

x_{H2O} = (50.77% · 2.3371)/99.980

x_{H2O} = 0.011868 mol/mol

§ 1065.650 Emission calculations.

(a) *General.* Calculate brake-specific emissions over each test interval in a duty cycle. Refer to the standard-setting part for any calculations you might need to determine a composite result, such as a calculation that weights and sums the results of individual test intervals in a duty cycle. We specify three alternative ways to calculate brake-specific emissions, as follows:

(1) For any testing, you may calculate the total mass of emissions, as described in paragraph (b) of this section, and divide it by the total work generated over the test interval, as described in paragraph (c) of this section, using the following equation:

$$e = \frac{m}{W} \qquad \text{Eq. 1065.650-1}$$

Example:

m_{NO_X} = 64.975 g
W = 25.783 kW·hr
e_{NO_X} = 64.975/25.783
e_{NO_X} = 2.520 g/(kW·hr)

(2) For discrete-mode steady-state testing, you may calculate the ratio of emission mass rate to power, as described in paragraph (d) of this section, using the following equation:

$$e = \frac{\overline{\dot{m}}}{\overline{P}} \qquad \text{Eq. 1065.650-2}$$

(3) For field testing, you may calculate the ratio of total mass to total work, where these individual values are determined as described in paragraph (e) of this section. You may also use this approach for laboratory testing, consistent with good engineering judgment. This is a special case in which you use a signal linearly proportional to raw exhaust molar flow rate to determine a value proportional to total emissions. You then use the same linearly proportional signal to determine total work using a chemical balance of fuel, intake air, and exhaust as described in § 1065.655, plus information about your engine's brake-specific fuel consumption. Under this method, flow meters need not meet accuracy specifications, but they must meet the applicable linearity and repeatability specifications in subpart D or subpart J of this part. The result is a brake-specific emission value calculated as follows:

$$e = \frac{\tilde{m}}{\tilde{W}} \qquad \text{Eq. 1065.650-3}$$

Example:

$\tilde{m}$ = 805.5 ~g
$\tilde{w}$ = 52.102 ~kW·hr
e_{CO} = 805.5/52.102
e_{CO} = 2.520 g/(kW·hr)

(b) *Total mass of emissions.* To calculate the total mass of an emission, multiply a concentration by its respective flow. For all systems, make preliminary calculations as described in paragraph (b)(1) of this section, then use the method in paragraphs (b)(2) through (4) of this section that is appropriate for your system. Calculate the total mass of emissions as follows:

(1) *Concentration corrections.* Perform the following sequence of preliminary calculations on recorded concentrations:

(i) Correct all concentrations measured on a ''dry'' basis to a ''wet'' basis, including dilution air background concentrations, as described in § 1065.659.

(ii) Calculate all HC concentrations, including dilution air background concentrations, as described in § 1065.660.

(iii) For emission testing with an oxygenated fuel, calculate any HC concentrations, including dilution air background concentrations, as described in § 1065.665. See subpart I of this part for testing with oxygenated fuels.

(iv) Correct the total mass of NO_X based on intake-air humidity as described in § 1065.670.

(v) Calculate brake-specific emissions before and after correcting for drift, including dilution air background concentrations, according to § 1065.672.

(2) *Continuous sampling.* For continuous sampling, you must frequently record a continuously updated concentration signal. You may measure this concentration from a changing flow rate or a constant flow rate (including discrete-mode steady-state testing), as follows:

(i) *Varying flow rate.* If you continuously sample from a changing exhaust flow rate, synchronously multiply it by the flow rate of the flow from which you extracted it. We consider the following to be examples of changing flows that require a continuous multiplication of concentration times molar flow rate: Raw exhaust, exhaust diluted with a constant flow rate of dilution air, and CVS dilution with a CVS flow meter that does not have an upstream heat exchanger or electronic flow control. Account for dispersion and time alignment as described in § 1065.201. This multiplication results in the flow rate of the emission itself. Integrate the emission flow rate over a test interval to determine the total emission. If the total emission is a molar quantity, convert this quantity to a mass by multiplying it by its molar mass, M. The result is the mass of the emission, m.Calculate m for continuous sampling with variable flow using the following equations:

$$m = M \cdot \sum_{i=1}^{N} x_i \cdot \dot{n}_i \cdot \Delta t \qquad \text{Eq. 1065.650-4}$$

Example:

M_{NMHC} = 13.875389 g/mol
N = 1200
x_{NMHC1} = 84.5 μmol/mol = $84.5 \cdot 10^{-6}$ mol/mol
x_{NMHC2} = 86.0 μmol/mol = $86.0 \cdot 10^{-6}$ mol/mol
$\dot{n}_{exh1}$ = 2.876 mol/s
$\dot{n}_{exh2}$ = 2.224 mol/s
f_{record} = 1 Hz
Using Eq. 1065.650 − 5,
Δt = 1/1 = 1 s
$m_{NMHC} = 13.875389 \cdot (84.5 \cdot 10^{-6} \cdot 2.876 + 86.0 \cdot 10^{-6} \cdot 2.224 + \ldots + x_{NMHC1200} \cdot \dot{n}_{exh}) \cdot 1$
m_{NMHC} = 25.23 g

(ii) *Constant flow rate.* If you continuously sample from a constant exhaust flow rate, calculate the mean concentration recorded over the test interval and treat the mean as a batch sample, as described in paragraph (b)(3)(ii) of this section. We consider the following to be examples of constant exhaust flows: CVS diluted exhaust with a CVS flow meter that has either an upstream heat exchanger, electronic flow control, or both.

(3) *Batch sampling.* For batch sampling, the concentration is a single value from a proportionally extracted batch sample (such as a bag, filter, impinger, or cartridge). In this case, multiply the mean concentration of the batch sample by the total flow from which the sample was extracted. You may calculate total flow by integrating a changing flow rate or by determining the mean of a constant flow rate, as follows:

(i) *Varying flow rate.* If you collect a batch sample from a changing exhaust flow rate, extract a sample proportional to the changing exhaust flow rate. We consider the following to be examples of changing flows that require proportional sampling: Raw exhaust, exhaust diluted with a constant flow rate of dilution air, and CVS dilution with a CVS flow meter that does not have an upstream heat exchanger or electronic flow control. Integrate the flow rate over a test interval to determine the total flow from which you extracted the proportional sample. Multiply the mean concentration of the batch sample by the total flow from which the sample was extracted. If the total emission is a molar quantity, convert this quantity to a mass by multiplying it by its molar mass, M. The result is the mass of the emission, m. In the case of PM emissions, where

the mean PM concentration is already in units of mass per mole of sample, $\bar{M}_{PM}$, simply multiply it by the total flow. The result is the total mass of PM, m_{PM}. Calculate m for batch sampling with variable flow using the following equation:

$$m = M \cdot \bar{x} \cdot \sum_{i=1}^{N} \dot{n}_i \cdot \Delta t \qquad \text{Eq. 1065.650-6}$$

Example:

M_{NOx} = 46.0055 g/mol
N = 9000
$\bar{x}_{NOx}$ = 85.6 μmol/mol = $85.6 \cdot 10^{-6}$ mol/mol
$\dot{n}_{dexh1}$ = 25.534 mol/s
$\dot{n}_{dexh2}$ = 26.950 mol/s
f_{record} = 5 Hz
Using Eq. 1065.650–5,
Δt = 1/5 = 0.2
$m_{NOx} = 46.0055 \cdot 85.6 \cdot 10^{-6} \cdot (25.534 + 26.950 + \ldots + \dot{n}_{exh9000}) \cdot 0.2$
m_{NOx} = 4.201 g

(ii) *Constant flow rate.* If you batch sample from a constant exhaust flow rate, extract a sample at a constant flow rate. We consider the following to be examples of constant exhaust flows: CVS diluted exhaust with a CVS flow meter that has either an upstream heat exchanger, electronic flow control, or both. Determine the mean molar flow rate from which you extracted the constant flow rate sample. Multiply the mean concentration of the batch sample by the mean molar flow rate of the exhaust from which the sample was extracted, and multiply the result by the time of the test interval. If the total emission is a molar quantity, convert this quantity to a mass by multiplying it by its molar mass, M. The result is the mass of the emission, m. In the case of PM emissions, where the mean PM concentration is already in units of mass per mole of sample $\bar{M}_{PM}$, simply multiply it by the total flow, and the result is the total mass of PM, m_{PM}, Calculate m for sampling with constant flow using the following equations:

$$m = M \cdot \bar{x} \cdot \bar{\dot{n}} \cdot \Delta t \qquad \text{Eq. 1065.650-7}$$

and for PM or any other analysis of a batch sample that yields a mass per mole of sample,

$$\bar{M} = M \cdot \bar{x} \qquad \text{Eq. 1065.650-8}$$

Example:

$\bar{M}_{PM}$ = 144.0 μg/mol = $144.0 \cdot 10^{-6}$ g/mol
$\bar{\dot{n}}_{dexh}$ = 57.692 mol/s
Δt = 1200 s
$m_{PM} = 144.0 \cdot 10^{-6} \cdot 57.692 \cdot 1200$
m_{PM} = 9.9692 g

(4) *Additional provisions for diluted exhaust sampling; continuous or batch.* The following additional provisions apply for sampling emissions from diluted exhaust:

(i) For sampling with a constant dilution ratio (DR) of air flow versus exhaust flow (e.g., secondary dilution for PM sampling), calculate m using the following equation:

$$m = m_{dil} \cdot (DR + 1) \qquad \text{Eq. 1065.650-9}$$

Example:

m_{PMdil} = 6.853 g
DR = 5:1
$m_{PM} = 6.853 \cdot (5 + 1)$
m_{PM} = 41.118 g

(ii) For continuous or batch sampling, you may measure background emissions in the dilution air. You may then subtract the measured background emissions, as described in § 1065.667.

(c) *Total work.* To calculate total work, multiply the feedback engine speed by its respective feedback torque. Integrate the resulting value for power over a test interval. Calculate total work as follows:

$$W = \sum_{i=1}^{N} P_i \cdot \Delta t \qquad \text{Eq. 1065.650-10}$$

$$P_i = f_{ni} \cdot T_i \qquad \text{Eq. 1065.650-11}$$

Example:

N = 9000
f_{n1} = 1800.2 rev/min
f_{n2} = 1805.8 rev/min
T_1 = 177.23 N·m
T_2 = 175.00 N·m
$C_{rev} = 2 \cdot \pi$ rad/rev
C_{t1} = 60 s/min
C_p = 1000 (N·m)/kW
f_{record} = 5 Hz
C_{t2} = 3600 s/hr

$$P_1 = \frac{1800.2 \cdot 177.23 \cdot 2 \cdot 3.14159}{60 \cdot 1000}$$

P_1 = 33.41 kW
P_2 = 33.09 kW
Using Eq. 1065.650–5,
Δt = 1/5 = 0.2 s

$$W = \frac{(33.41 + 33.09 + \ldots + P_{9000}) \cdot 0.2}{3600}$$

W = 16.875 kW·hr

(d) *Steady-state mass rate divided by power.* To determine steady-state brake-specific emissions for a test interval as described in paragraph (a)(2) of this section, calculate the mean steady-state mass rate of the emission, $\bar{\dot{m}}$, and the mean steady-state power, $\bar{P}$, as follows:

(1) To calculate, $\bar{\dot{m}}$, multiply its mean concentration, $\bar{x}$, by its corresponding mean molar flow rate, $\bar{\dot{n}}$. If the result is a molar flow rate, convert this quantity to a mass rate by multiplying it by its molar mass, M. The result is the mean mass rate of the emission, $\dot{m}_{PM}$. In the case of PM emissions, where the mean PM concentration is already in units of mass per mole of sample, $\bar{M}_{PM}$, simply multiply it by the mean molar flow rate, $\bar{\dot{n}}$. The result is the mass rate of PM, $\dot{m}_{PM}$. Calculate $\bar{\dot{m}}$ using the following equation:

$$\bar{\dot{m}} = M \cdot \bar{x} \cdot \bar{\dot{n}} \qquad \text{Eq. 1065.650-12}$$

(2) Calculate $\bar{P}$ using the following equation:

$$\bar{P} = \bar{f}_n \cdot \bar{T} \qquad \text{Eq. 1065.650-13}$$

(3) *Ratio of mass and work.* Divide emission mass rate by power to calculate a brake-specific emission result as described in paragraph (a)(2) of this section.

(4) *Example.* The following example shows how to calculate mass of emissions using mean mass rate and mean power:

M_{CO} = 28.0101 g/mol
$\bar{x}_{CO}$ = 12.00 mmol/mol = 0.01200 mol/mol
$\bar{\dot{n}}$ = 1.530 mol/s
$\bar{f}$
$\bar{T}$ = 121.50 N·m
$\bar{\dot{m}}$ = 28.0101·0.01200·1.530
$\bar{\dot{m}}$ = 0.514 g/s
$\bar{P}$ = 121.5·375.37
$\bar{P}$ = 45607 W = 45.607 kW
e_{CO} = 0.514/45.61
e_{CO} = 0.0113 g/(kW·hr)

(e) *Ratio of total mass of emissions to total work.* To determine brake-specific emissions for a test interval as described in paragraph (a)(3) of this section, calculate a value proportional to the total mass of each emission. Divide each proportional value by a value that is similarly proportional to total work.

(1) *Total mass.* To determine a value proportional to the total mass of an emission, determine total mass as described in paragraph (b) of this section, except substitute for the molar flow rate, $\dot{n}$, or the total flow, n, with a signal that is linearly proportional to molar flow rate, $\bar{\dot{n}}$, or linearly proportional to total flow, $\tilde{n}$, as follows:

$$\tilde{\dot{m}}_{fueli} = \frac{1}{w_{fuel}} \cdot \frac{M_C \cdot \tilde{\dot{n}}_i \cdot x_{Cproddryi}}{1 + x_{H2Oi}} \qquad \text{Eq. 1065.650-14}$$

(2) *Total work*. To calculate a value proportional to total work over a test interval, integrate a value that is proportional to power. Use information about the brake-specific fuel consumption of your engine, e_{fuel}, to convert a signal proportional to fuel flow rate to a signal proportional to power. To determine a signal proportional to fuel flow rate, divide a signal that is proportional to the mass rate of carbon products by the fraction of carbon in your fuel, w_c. For your fuel, you may use a measured w_c or you may use the default values in Table 1 of § 1065.655. Calculate the mass rate of carbon from the amount of carbon and water in the exhaust, which you determine with a chemical balance of fuel, intake air, and exhaust as described in § 1065.655. In the chemical balance, you must use concentrations from the flow that generated the signal proportional to molar flow rate, $\bar{n}$, in paragraph (e)(1) of this section. Calculate a value proportional to total work as follows:

$$\tilde{W} = \sum_{i=1}^{N} \tilde{P}_i \cdot \Delta t \qquad \text{Eq. 1065.650-15}$$

Where:

$$\tilde{P}_i = \frac{\tilde{\dot{m}}_{fueli}}{e_{fuel}} \qquad \text{Eq. 1065.650-16}$$

(3) Divide the value proportional to total mass by the value proportional to total work to determine brake-specific emissions, as described in paragraph (a)(3) of this section.

(4) The following example shows how to calculate mass of emissions using proportional values:

$N = 3000$

$f_{record} = 5$ Hz

$e_{fuel} = 285$ g/(kW·hr)

$w_{fuel} = 0.869$ g/g

$M_c = 12.0107$ g/mol

$\dot{n}_1 = 3.922$ ~mol/s = 14119.2 mol/hr

$x_{Cproddry1} = 91.634$ mmol/mol = 0.091634 mol/mol

$x_{H2O1} = 27.21$ mmol/mol = 0.02721 mol/mol

Using 1065.650–5,

$\Delta t = 0.2$ s

$$\tilde{W} = \frac{12.0107 \cdot \left[\frac{3.922 \cdot 0.091634}{1 + 0.02721} + \frac{\tilde{\dot{n}}_2 \cdot x_{Cproddry2}}{1 + x_{H202}} + \ldots + \frac{\tilde{\dot{n}}_{3000} \cdot x_{Cpdry3000}}{1 + x_{H2On3000}} \right] \cdot 0.2}{285 \cdot 0.869}$$

$\tilde{W} = 5.09$ ~ (kW·hr)

(f) *Rounding*. Round emission values only after all calculations are complete and the result is in g/(kW·hr) or units equivalent to the units of the standard, such as g/(hp·hr). See the definition of ''Round'' in § 1065.1001.

§ 1065.655 Chemical balances of fuel, intake air, and exhaust.

(a) *General*. Chemical balances of fuel, intake air, and exhaust may be used to calculate flows, the amount of water in their flows, and the wet concentration of constituents in their flows. With one flow rate of either fuel, intake air, or exhaust, you may use chemical balances to determine the flows of the other two. For example, you may use chemical balances along with either intake air or fuel flow to determine raw exhaust flow.

(b) *Procedures that require chemical balances*. We require chemical balances when you determine the following:

(1) A value proportional to total work, $\tilde{W}$, when you choose to determine brake-specific emissions as described in § 1065.650(e).

(2) The amount of water in a raw or diluted exhaust flow, x_{H2O}, when you do not measure the amount of water to correct for the amount of water removed by a sampling system. Correct for removed water according to § 1065.659(c)(2).

(3) The flow-weighted mean fraction of dilution air in diluted exhaust $\bar{x}_{dil}$, when you do not measure dilution air flow to correct for background emissions as described in § 1065.667(c). Note that if you use chemical balances for this purpose, you are assuming that your exhaust is stoichiometric, even if it is not.

(c) *Chemical balance procedure*. The calculations for a chemical balance involve a system of equations that require iteration. We recommend using a computer to solve this system of equations. You must guess the initial values of up to three quantities: the amount of water in the measured flow, x_{H2O}, fraction of dilution air in diluted exhaust, x_{dil}, and the amount of products on a C_1 basis per dry mole of dry measured flow, $x_{Cproddry}$. For each emission concentration, x, and amount of water x_{H2O}, you must determine their completely dry concentrations. x_{dry} and x_{H2Odry}. You must also use your fuel's atomic hydrogen-to-carbon ratio, α, and oxygen-to-carbon ratio, β. For your fuel, you may measure α and β or you may use the default values in Table 1 of § 1065.650. Use the following steps to complete a chemical balance:

(1) Convert your measured concentrations such as, $x_{CO2meas}$, x_{NOmeas}, and x_{H2Oint}, to dry concentrations by dividing them by one minus the amount of water present during their respective measurements; for example: $x_{H2OxCO2}$, x_{H2OxNO}, and x_{H2Oint}. If the amount of water present during a ''wet'' measurement is the same as the unknown amount of water in the exhaust flow, x_{H2O}, iteratively solve for that value in the system of equations. If you measure only total NO_X and not NO and NO_2 separately, use good engineering judgement to estimate a split in your total NO_X concentration between NO and NO_2 for the chemical balances. For example, if you measure emissions from a stoichiometric spark-ignition engine, you may assume all NO_X is NO. For a compression-ignition engine, you may assume that your molar concentration of NO_X, x_{NOX}, is 75% NO and 25% NO_2 For NO_2 storage aftertreatment systems, you may assume x_{NOX} is 25% NO and 75% NO_2. Note that for calculating the mass of NO_X emissions, you must use the molar mass of NO_2 for the effective molar mass of all NO_X species, regardless of the actual NO_2 fraction of NO_X.

(2) Enter the equations in paragraph (c)(4) of this section into a computer program to iteratively solve for x_{H2O} and $x_{Cproddry}$. If you measure raw exhaust flow, set x_{dil} equal to zero. If you measure diluted exhaust flow, iteratively solve for x_{dil}. Use good engineering judgment to guess initial values for x_{H2O}, $x_{Cproddry}$, and x_{dil}. We

recommend guessing an initial amount of water that is about twice the amount of water in your intake or dilution air. We recommend guessing an initial value of $x_{Cproddry}$ as the sum of your measured CO_2, CO, and THC values. If you measure diluted exhaust, we also recommend guessing an initial x_{dil} between 0.75 and 0.95, such as 0.8. Iterate values in the system of equations until the most recently updated guesses are all within ±1% of their respective most recently calculated values.

(3) Use the following symbols and subscripts in the equations for this paragraph (c):

x_{H2O} = Amount of water in measured flow.

x_{H2Odry} = Amount of water per dry mole of measured flow.

$x_{Cproddry}$ = Amount of carbon products on a C_1 basis per dry mole of measured flow.

x_{dil} = Fraction of dilution air in measured flow, assuming stoichiometric exhaust; or x_{dil} = excess air for raw exhaust.

$x_{prod/intdry}$ = Amount of dry stoichiometric products per dry mole of intake air.

$x_{O2proddry}$ = Amount of oxygen products on an O_2 basis per dry mole of measured flow.

$x_{[emission]dry}$ = Amount of emission per dry mole of measured flow.

$x_{[emission]meas}$ = Amount of emission in measured flow.

$x_{H2O[emission]meas}$ = Amount of water at emission-detection location. Measure or estimate these values according to § 1065.145(d)(2).

x_{H2Oint} = Amount of water in the intake air, based on a humidity measurement of intake air.

x_{H2Odil} = Amount of water in dilution air, based on a humidity measurement of intake air.

$x_{O2airdry}$ = Amount of oxygen per dry mole of air. Use $x_{O2airdry}$= 0.209445 mol/mol.

$x_{CO2airdry}$ = Amount of carbon dioxide per dry mole of air. Use $x_{CO2airdry}$ = 375 mol/mol.

α = Atomic hydrogen-to-carbon ratio in fuel.

β = Atomic oxygen-to-carbon ratio in fuel.

(4) Use the following equations to iteratively solve for x_{H2O} and $x_{Cproddry}$:

$$x_{H2O} = \frac{x_{H2Odry}}{1 + x_{H2Odry}} \qquad \text{Eq. 1065.655-1}$$

$$x_{H2Odry} = \frac{\alpha}{2} \cdot x_{Cproddry} + \left(1 - x_{dil}\right) \cdot \frac{x_{H2Ointdry}}{x_{prod/intdry}} + x_{dil} \cdot x_{H2Odildry} \qquad \text{Eq. 1065.655-2}$$

$$x_{Cproddry} = x_{CO2dry} + x_{COdry} + x_{THCdry} \qquad \text{Eq. 1065.655-3}$$

$$x_{dil} = 1 - \frac{x_{O2proddry} \cdot x_{prod/intdry}}{x_{O2airdry}} \cdot \left(1 + x_{H2Ointdry}\right) \qquad \text{Eq. 1065.655-4}$$

$$x_{prod/intdry} = \frac{1}{1 - \frac{1}{1 - x_{dil}} \cdot \frac{1}{2} \cdot \left(x_{COdry} - \frac{\alpha}{2} \cdot x_{Cproddry} - x_{NO2dry}\right)} \qquad \text{Eq. 1065.655-5}$$

$$x_{O2proddry} = x_{CO2dry} + \frac{1}{2} \cdot \left(x_{COdry} + \frac{\alpha}{2} \cdot x_{Cproddry} + x_{NOdry}\right) + x_{NO2dry} - \beta \cdot x_{Cproddry} \qquad \text{Eq. 1065.655-6}$$

$$x_{CO2dry} = \frac{x_{CO2meas}}{1 - x_{H2OCO2meas}} - \frac{x_{CO2airdry}}{1 - \frac{1}{2} \cdot \left(x_{COdry} - \frac{\alpha}{2} \cdot x_{Cproddry} - x_{NO2dry}\right)} \qquad \text{Eq. 1065.655-7}$$

$$x_{COdry} = \frac{x_{COmeas}}{1 - x_{H2OxCOmeas}} \qquad \text{Eq. 1065.655-8}$$

$$x_{THCdry} = \frac{x_{THCmeas}}{1 - x_{H2OxTHCmeas}} \qquad \text{Eq. 1065.655-9}$$

$$x_{H2Ointdry} = \frac{x_{H2Oint}}{1 - x_{H2Oint}} \qquad \text{Eq. 1065.655-10}$$

$$x_{H2Odildry} = \frac{x_{H2Odil}}{1 - x_{H2Odil}} \qquad \text{Eq. 1065.655-11}$$

$$x_{NO2dry} = \frac{x_{NO2meas}}{1 - x_{H2OxNO2meas}} \qquad \text{Eq. 1065.655-12}$$

$$x_{NOdry} = \frac{x_{NOmeas}}{1 - x_{H2OxNOmeas}} \qquad \text{Eq. 1065.655-13}$$

(5) The following example is a solution for x_{H2O} and $x_{Cproddry}$ using the equations in paragraph (c)(4) of this section:

$$x_{H2O} = \frac{35.24}{1 + \frac{35.24}{1000}} = 34.04 \text{ mmol/mol}$$

$$x_{H2Odry} = \frac{1.8}{2} \cdot 24.69 + (1 - 0.843) \cdot \frac{17.22}{0.9338} + 0.843 \cdot 12.01 = 35.24 \text{ mmol/mol}$$

$$x_{Cproddry} = 24.614 + \frac{29.3}{1000} + \frac{47.6}{1000} = 24.69 \text{ mmol/mol}$$

$$x_{dil} = 1 - \frac{\frac{34.54}{1000} \cdot 0.9338}{0.209445} \cdot \left(1 + \frac{17.22}{1000}\right) = 0.843$$

$$x_{prod/intdry} = \frac{1}{1 - \frac{1}{1 - 0.843} \cdot \frac{1}{2} \cdot \left(\frac{29.3}{1000000} - \frac{1.8}{2} \cdot \frac{24.69}{1000} - \frac{12.1}{1000000}\right)} = 0.9338 \text{ mol/mol}$$

$$x_{O2prod/intdry} = 24.614 + \frac{1}{2} \cdot \left(\frac{29.3}{1000} + \frac{1.8}{2} \cdot 24.69 + \frac{50.4}{1000}\right) + \frac{12.1}{1000} - 0.05 \cdot 24.69 = 34.54 \text{ mol/mol}$$

$$x_{CO2dry} = \frac{24.770}{1 - \frac{8.601}{1000}} - \frac{\frac{375}{1000}}{1 - \frac{1}{2} \cdot \left(\frac{29.3}{1000000} - \frac{1.8}{2} \cdot \frac{24.69}{1000} - \frac{12.1}{1000000}\right)} = 24.614 \text{ mmol/mol}$$

$$x_{COdry} = \frac{29.0}{1 - \frac{8.601}{1000}} = 29.3\ \mu mol/mol$$

$$x_{H2Ointdry} = \frac{16.93}{1 - \frac{16.93}{1000}} = 17.22\ mmol/mol$$

$$x_{NO2dry} = \frac{12.0}{1 - \frac{8.601}{1000}} = 12.1\ \mu mol/mol$$

$$x_{THCdry} = \frac{46}{1 - \frac{34.04}{1000}} = 47.6\ \mu mol/mol$$

$$x_{H2Odildry} = \frac{11.87}{1 - \frac{11.87}{1000}} = 12.01\ mmol/mol$$

$$x_{NOdry} = \frac{50.0}{1 - \frac{8.601}{1000}} = 50.4\ \mu mol/mol$$

$x_{O2airdry}$ = 0.209445 mol/mol
$x_{CO2airdry}$ = 375 mol/mol
α = 1.8
β = 0.05

TABLE 1 OF § 1065.655.—DEFAULT VALUES OF ATOMIC HYDROGEN-TO-CARBON RATIO, α, ATOMIC OXYGEN-TO-CARBON RATIO, β AND CARBON MASS FRACTION OF FUEL, W_C, FOR VARIOUS FUELS

Fuel	Atomic hydrogen and oxygen-to-carbon ratios $CH\alpha\ O\beta$	Carbon mass concentration, w_C g/g
Gasoline	$CH_{1.85}O_0$	0.866
#2 Diesel	$CH_{1.80}O_0$	0.869
#1 Diesel	$CH_{1.93}O_0$	0.861
Liquified Petroleum Gas	$CH_{2.64}O_0$	0.819
Natural gas	$CH_{3.78}O_{0.016}$	0.747
Ethanol	$CH_3O_{0.5}$	0.521
Methanol	CH_4O_1	0.375

(d) *Calculated raw exhaust molar flow rate from measured intake air molar flow rate or fuel mass flow rate.* You may calculate the raw exhaust molar flow rate from which you sampled emissions, $\dot{n}_{exh}$, based on the measured intake air molarflow rate, $\dot{n}_{int}$, or the measured fuel mass flow rate, $\dot{m}_{fuel}$, and the values calculated using the chemical balance in paragraph (c) of this section. Solve for the chemical balance in paragraph (c) of this section at the same frequency that you update and record $\dot{n}_{int}$ or $\dot{m}_{fuel}$.

(1) *Crankcase flow rate.* You may calculate raw exhaust flow based on $\dot{n}_{int}$ or $\dot{m}_{fuel}$ only if at least one of the following is true about your crankcase emission flow rate:

(i) Your test engine has a production emission-control system with a closed crankcase that routes crankcase flow back to the intake air, downstream of your intake air flow meter.

(ii) During emission testing you route open crankcase flow to the exhaust according to § 1065.130(g).

(iii) You measure open crankcase emissions and flow, and you add the masses of crankcase emissions to your brake-specific emission calculations.

(iv) Using emission data or an engineering analysis, you can show that neglecting the flow rate of open crankcase emissions does not adversely affect your ability to demonstrate compliance with the applicable standards.

(2) *Intake air molar flow rate calculation.* Based on $\dot{n}_{int}$, calculate $\dot{n}_{exh}$ as follows:

$$\dot{n}_{exh} = \left[\dot{n}_{int} \cdot \left(1 - x_{H20\,int}\right) \cdot x_{prod/intdry} \cdot \left(1 + x_{H20dry}\right)\right] \cdot \left[1 + \frac{x_{dil}}{1 - x_{dil}}\right] \qquad \text{Eq. } 1065.655-14$$

Where:
$\dot{n}_{exh}$ = raw exhaust molar flow rate from which you measured emissions.
$\dot{n}_{int}$ = intake air molar flow rate including humidity in intake air.

Example:

$\dot{n}_{int}$ = 3.780 mol/s

x_{H20int} = 16.930 mmol/mol = 0.016930 mol/mol

$x_{prod/intdry}$ = 0.93382 mol/mol

x_{H20dry} = 130.16 mmol/mol = 0.13016 mol/mol

x_{dil} = 0.20278 mol/mol

$$\dot{n}_{exh} = \left[3.780 \cdot (1 - 0.016930) \cdot 0.93382 \cdot (1 + 0.13016)\right] \cdot \left[1 + \frac{0.20278}{1 - 0.20278}\right]$$

$\dot{n}_{exh}$ =4.919 mol/s

(3) *Fuel mass flow rate calculation.* Based on $\dot{m}_{fuel}$, calculate $\dot{n}_{exh}$ as follows:

$$\dot{n}_{exh} = \frac{\dot{m}_{fuel} \cdot w_c}{M_c \cdot x_{Cproddry}} \cdot \left(1 + x_{H20dry}\right) \cdot \left[1 + \frac{x_{dil}}{1 - x_{dil}}\right] \quad \text{Eq. } 1065.655-15$$

Where:

$\dot{n}_{exh}$= raw exhaust molar flow rate from which you measured emissions.

$\dot{m}_{fuel}$= intake air molar flow rate including humidity in intake air.

Example:

$\dot{m}_{fuel}$= 6.023 g/s

w_C = 0.869 g/g

M_C = 12.0107 g/mol

$x_{Cproddry}$ = 125.58 mmol/mol = 0.12558 mol/mol

x_{H20dry} = 130.16 mmol/mol = 0.13016 mol/mol

x_{dil} = 0.20278 mol/mol

$$\dot{n}_{exh} = \frac{6.0233 \cdot 0.869}{12.0107 \cdot 0.12558} \cdot (1 + 0.13016) \cdot \left[1 + \frac{0.20278}{1 - 0.20278}\right]$$

$\dot{n}_{exh}$ = 4.919 mol/s

§ 1065.659 Removed water correction.

(a) If you remove water upstream of a concentration measurement, x, or upstream of a flow measurement, n, correct for the removed water. Perform this correction based on the amount of water at the concentration measurement, $x_{H2O[emission]meas}$, and at the flow meter, x_{H2O}, whose flow is used to determine the concentration's total mass over a test interval.

(b) Downstream of where you removed water, you may determine the amount of water remaining by any of the following:

(1) Measure the dewpoint and absolute pressure downstream of the water removal location and calculate the amount of water remaining as described in § 1065.645.

(2) When saturated water vapor conditions exist at a given location, you may use the measured temperature at that location as the dewpoint for the downstream flow. If we ask, you must demonstrate how you know that saturated water vapor conditions exist. Use good engineering judgment to measure the temperature at the appropriate location to accurately reflect the dewpoint of the flow.

(3) You may also use a nominal value of absolute pressure based on an alarm setpoint, a pressure regulator setpoint, or good engineering judgment.

(c) For a corresponding concentration or flow measurement where you did not remove water, you may determine the amount of initial water by any of the following:

(1) Use any of the techniques described in paragraph (b) of this section.

(2) If the measurement comes from raw exhaust, you may determine the amount of water based on intake-air humidity, plus a chemical balance of fuel, intake air and exhaust as described in § 1065.655.

(3) If the measurement comes from diluted exhaust, you may determine the amount of water based on intake-air humidity, dilution air humidity, and a chemical balance of fuel, intake air, and exhaust as described in § 1065.655.

(d) Perform a removed water correction to the concentration measurement using the following equation:

$$x = x_{[emission]meas} \cdot \left[\frac{1 - x_{H2O}}{1 - x_{H2O[emission]meas}}\right] \quad \text{Eq. } 1065.659\text{-}1$$

Example:

x_{COmeas} = 29.0 µmol/mol

$x_{H2OxCOmeas}$ = 8.601 mmol/mol = 0.008601 mol/mol

x_{H2O} = 34.04 mmol/mol = 0.03404 mol/mol

$$x_{CO} = 29.0 \cdot \left[\frac{1 - 0.03404}{1 - 0.008601}\right]$$

x_{CO} = 28.3 µmol/mol

§ 1065.660 THC and NMHC determination.

(a) *THC determination.* If we require you to determine THC emissions, calculate x_{THC} using the initial THC contamination concentration $x_{THCinit}$ from § 1065.520 as follows:

$$x_{THCcor} = x_{THCuncor} - x_{THCinit} \quad \text{Eq. } 1065.660\text{-}1$$

Example:

$x_{THCuncor}$ = 150.3 µmol/mol

$x_{THCinit}$ = 1.1 µmol/mol

x_{THCcor} = 150.3 − 1.1

x_{THCcor} = 149.2 µmol/mol

(b) *NMHC determination.* Use one of the following to determine NMHC emissions, x_{NMHC}.

(1) Report x_{NMHC} as 0.98 • x_{THC} if you did not measure CH_4, or if the result of paragraph (b)(2) or (3) of this section is greater than the result using this paragraph (b)(1).

(2) For nonmethane cutters, calculate x_{NMHC} using the nonmethane cutter's penetration fractions (PF) of CH_4 and C_2H_6 from § 1065.365, and using the initial NMHC contamination concentration $x_{NMHCinit}$ from § 1065.520 as follows:

$$x_{NMHC} = \frac{PF_{CH4} \cdot x_{THC} - RF_{CH4} \cdot x_{CH4}}{PF_{CH4} - PF_{C2H6}} - x_{NMHCinit} \qquad \text{Eq. 1065.660-2}$$

Where:

x_{NMHC} = concentration of NMHC.

PF_{CH4} = nonmethane cutter CH_4 penetration fraction, according to § 1065.365.

x_{THC} = concentration of THC, as measured by the THC FID.

RF_{CH4} = response factor of THC FID to CH_4, according to § 1065.360.

x_{CH4} = concentration of methane, as measured downstream of the nonmethane cutter.

PF_{C2H6} = nonmethane cutter CH_4 penetration fraction, according to § 1065.365.

$x_{NMHCinit}$ = initial NMHC contamination concentration, according to § 1065.520.

Example:

PF_{CH4} = 0.990

x_{THC} = 150.3 μmol/mol

RF_{CH4} = 1.05

x_{CH4} = 20.5 μmol/mol

PF_{C2H6} = 0.020

$x_{NMHCinit}$ = 1.1 μmol/mol

$$x_{NMHC} = \frac{0.990 \cdot 150.3 - 1.05 \cdot 20.5}{0.990 - 0.020} - 1.1$$

x_{NMHC} = 130.1 μmol/mol

(3) For a gas chromatograph, calculate x_{NMHC} using the THC analyzer's response factor (RF) for CH_4, from § 1065.360, and using the initial NMHC contamination concentration $x_{NMHCinit}$ from § 1065.520 as follows:

$$x_{NMHC} = x_{THC} - RF_{CH4} \cdot x_{CH4} - x_{NMHCinit} \qquad \text{Eq. 1065.660-3}$$

Example:

x_{THC} = 145.6 μmol/mol

RF_{CH4} = 0.970

x_{CH4} = 18.9 μmol/mol

$x_{NMHCinit}$ = 1.1 μmol/mol

x_{NMHC} = 145.6 − 0.970 · 18.9 − 1.1

x_{NMHC} = 126.2 μmol/mol

§ 1065.665 THCE and NMHCE determination.

(a) If you measured an oxygenated hydrocarbon's mass concentration (per mole of exhaust), first calculate its molar concentration by dividing its mass concentration by the effective molar mass of the oxygenated hydrocarbon, then multiply each oxygenated hydrocarbon's molar concentration by its respective number of carbon atoms per molecule. Add these C_1-equivalent molar concentrations to the molar concentration of NOTHC. The result is the molar concentration of THCE. Calculate THCE concentration using the following equations:

$$x_{THCE} = x_{NOTHC} + \sum_{i=1}^{N} x_{OHC_i} - x_{THCEinit} \qquad \text{Eq. 1065.665-1}$$

$$x_{NOTHC} = x_{THC} - \sum_{i=1}^{N} \left(x_{OHCi} \cdot RF_{OHCi} \cdot C^{\#} \right) \qquad \text{Eq. 1065.665-2}$$

$$x_{OHCi} = \frac{M_{exhOHCi} \cdot m_{dexhOHC}}{M_{OHCi} \cdot m_{dexh}} = \frac{n_{dexhOHC}}{n_{dexh}} \qquad \text{Eq. 1065.665-3}$$

Where:

x_{OHCi} = The C_1-equivalent concentration of oxygenated species i in diluted exhaust.

x_{THC} = The C_1-equivalent FID response to NOTHC and all OHC in diluted exhaust.

RF_{OHCi} = The response factor of the FID to species i relative to propane on a C_1-equivalent basis.

$C^{\#}$ = the mean number of carbon atoms in the particular compound.

(b) If we require you to determine NMHCE, use the following equation:

$$x_{NMHCE} = x_{THCE} - x_{CH4} \cdot RF_{CH4} \qquad \text{Eq. 1065.665-4}$$

(c) The following example shows how to determine NMHCE emissions based on ethanol (C_2H_5OH) and methanol (CH_3OH) molar concentrations, and acetaldehyde (C_2H_4O) and formaldehyde (HCHO) as mass concentrations:

x_{NMHC} = 127.3 μmol/mol

x_{C2H5OH} = 100.8 μmol/mol

x_{CH3OH} = 25.5 μmol/mol

$M_{exhC2H4O}$ = 0.841 mg/mol

$M_{exhHCHO}$ = 39.0 μg/mol

M_{C2H4O} = 44.05256 g/mol

M_{HCHO} = 30.02598 g/mol

x_{C2H4O} = 0.841/44.05256 · 1000

x_{C2H4O} = 19.1 μmol/mol

x_{HCHO} = 39/30.02598

x_{HCHO} = 1.3 μmol/mol

x_{NMHCE} = 127.3 + 2 · 100.8 + 25.5 + 2 · 19.1 + 1.3

x_{NMHCE} = 393.9 μmol/mol

§ 1065.667 Dilution air background emission correction.

(a) To determine the mass of background emissions to subtract from a diluted exhaust sample, first determine the total flow of dilution air, n_{dil}, over the test interval. This may be a measured quantity or a quantity calculated from the diluted exhaust flow and the flow-weighted mean fraction of

dilution air in diluted exhaust, $\bar{x}_{dil}$. Multiply the total flow of dilution air by the mean concentration of a background emission. This may be a time-weighted mean or a flow-weighted mean (*e.g.*, a proportionally sampled background). The product of n_{dil} and the mean concentration of a background emission is the total amount of a background emission. If this is a molar quantity, convert it to a mass by multiplying it by its molar mass, M. The result is the mass of the background emission, m. In the case of PM, where the mean PM concentration is already in units of mass per mole of sample, $\bar{M}_{PM}$, multiply it by the total amount of dilution air, and the result is the total background mass of PM, m_{PM}. Subtract total background masses from total mass to correct for background emissions.

(b) You may determine the total flow of dilution air by a direct flow measurement. In this case, calculate the total mass of background as described in § 1065.650(b), using the dilution air flow, n_{dil} . Subtract the background mass from the total mass. Use the result in brake-specific emission calculations.

(c) You may determine the total flow of dilution air from the total flow of diluted exhaust and a chemical balance of the fuel, intake air, and exhaust as described in § 1065.655. In this case, calculate the total mass of background as described in § 1065.650(b), using the total flow of diluted exhaust, n_{dexh}, then multiply this result by the flow-weighted mean fraction of dilution air in diluted exhaust, $\bar{x}_{dil}$. Calculate $\bar{x}_{dil}$ using flow-weighted mean concentrations of emissions in the chemical balance, as described in § 1065.655. You may assume that your engine operates stoichiometrically, even if it is a lean-burn engine, such as a compression-ignition engine. Note that for lean-burn engines this assumption could result in an error in emission calculations. This error could occur because the chemical balances in § 1065.655 correct excess air passing through a lean-burn engine as if it was dilution air. If an emission concentration expected at the standard is about 100 times its dilution air background concentration, this error is negligible. However, if an emission concentration expected at the standard is similar to its background concentration, this error could be significant. If this error might affect your ability to show that your engines comply with applicable standards, we recommend that you remove background emissions from dilution air by HEPA filtration, chemical adsorption, or catalytic scrubbing. You might also consider using a partial-flow dilution technique such as a bag mini-diluter, which uses purified air as the dilution air.

(d) The following is an example of using the flow-weighted mean fraction of dilution air in diluted exhaust, $\bar{x}_{dil}$, and the total mass of background emissions calculated using the total flow of diluted exhaust, n_{dexh}, as described in § 1065.650(b) :

$$m_{bkgnd} = \bar{x}_{dil} \cdot m_{bkgnddexh} \qquad \text{Eq. 1065.667-1}$$

$$m_{bkgnddexh} = M \cdot \bar{x}_{bkgnd} \cdot n_{dexh} \qquad \text{Eq. 1065.667-2}$$

Example:

M_{NOx} = 46.0055 g/mol

$\bar{x}_{bkgnd}$ = 0.05 μmol/mol = $0.05 \cdot 10^{-6}$ mol/mol

n_{dexh} = 23280.5 mol

$\bar{x}_{dil}$ = 0.843

$m_{bkgndNOxdexh} = 46.0055 \cdot 0.05 \cdot 10^{-6} \cdot 23280.5$

$m_{bkgndNOxdexh}$ = 0.0536 g

$m_{bkgndNOx} = 0.843 \cdot 0.0536$

$m_{bkgndNOx}$ = 0.0452 g

§ 1065.670 NO_X intake-air humidity and temperature corrections.

See the standard-setting part to determine if you may correct NO_X emissions for the effects of intake-air humidity or temperature. Use the NO_X intake-air humidity andtemperature corrections specified in the standard-setting part instead of the NO_X intake-air humidity correction specified in this part 1065. If the standard-setting part allows correcting NO_X emissions for intake-air humidity according to this part 1065, first apply any NO_X corrections for background emissions and water removal from the exhaust sample, then correct NO_X concentrations for intake-air humidity using one of the following approaches:

(a) Correct for intake-air humidity using the following equation:

$$x_{NOxcor} = x_{NOxuncor} \cdot (9.953 \cdot x_{H2O} + 0.832) \qquad \text{Eq. 1065.670-1}$$

Example:

$x_{NOxuncor}$ = 700.5 μmol/mol

x_{H2O} = 0.022 mol/mol

$x_{NOxcor} = 700.5 \cdot (9.953 \cdot 0.022 + 0.832)$

x_{NOxcor} = 736.2 μmol/mol

(b) Develop your own correction, based on good engineering judgment.

§ 1065.672 Drift correction.

(a) *Scope and frequency.* Perform the calculations in this section to determine if gas analyzer drift invalidates the results of a test interval. If drift does not invalidate the results of a test interval, correct that test interval's gas analyzer responses for drift according to this section. Use the drift-corrected gas analyzer responses in all subsequent emission calculations. Note that the acceptable threshold for gas analyzer drift over a test interval is specified in § 1065.550 for both laboratory testing and field testing.

(b) *Correction principles.* The calculations in this section utilize a gas analyzer's responses to reference zero and span concentrations of analytical gases, as determined sometime before and after a test interval. The calculations correct the gas analyzer's responses that were recorded during a test interval. The correction is based on an analyzer's mean responses to reference zero and span gases, and it is based on the reference concentrations of the zero and span gases themselves. Validate and correct for drift as follows:

(c) *Drift validation.* After applying all the other corrections–except drift correction–to all the gas analyzer signals, calculate brake-specific emissions according to § 1065.650. Then correct all gas analyzer signals for drift according to this section. Recalculate brake-specific emissions using all of the drift-corrected gas analyzer signals. Validate and report the brake-specific

emission results before and after drift correction according to § 1065.550.

(d) *Drift correction.* Correct all gas analyzer signals as follows:

(1) Correct each recorded concentration, x_i, for continuous sampling or for batch sampling, $\bar{x}$.

(2) Correct for drift using the following equation:

$$x_{idrift\ corrected} = x_{refzero} + \frac{2 \cdot x_{refspan}}{x_{prespan} + x_{postspan}} \cdot \left(x_i - \frac{x_{prezero} + x_{postzero}}{2} \right) \qquad \text{Eq. 1065.672-1}$$

Where:

$x_{idriftcorrected}$ = concentration corrected for drift.

$x_{refzero}$ = reference concentration of the zero gas, which is usually zero unless known to be otherwise.

$x_{refspan}$ = reference concentration of the span gas.

$x_{prespan}$ = pre-test interval gas analyzer response to the span gas concentration.

$x_{postspan}$ = post-test interval gas analyzer response to the span gas concentration.

x_i or $\bar{x}$ = concentration recorded during test, before drift correction.

$x_{prezero}$ = pre-test interval gas analyzer response to the zero gas concentration.

$x_{postzero}$ = post-test interval gas analyzer response to the zero gas concentration.

Example:

$x_{refzero}$ = 0 µmol/mol

$x_{refspan}$ = 1800.0 µmol/mol

$x_{prespan}$ = 1800.5 µmol/mol

$x_{postspan}$ = 1695.8 µmol/mol

x_i or $\bar{x}$ = 435.5 µmol/mol

$x_{prezero}$ = 0.6 µmol/mol

$x_{postzero}$ = −5.2 µmol/mol

$$x_{idrift\ corrected} = 0 + \frac{2 \cdot 1800.0}{1800.5 + 1695.8} \cdot \left(435.5 - \frac{0.6 + (-5.2)}{2} \right)$$

$x_{idriftcorrected}$ = 450.8 µmol/mol

(3) For any pre-test interval concentrations, use concentrations determined most recently before the test interval. For some test intervals, the most recent pre-zero or pre-span might have occurred before one or more previous test intervals.

(4) For any post-test interval concentrations, use concentrations determined most recently after the test interval. For some test intervals, the most recent post-zero or post-span might have occurred after one or more subsequent test intervals.

(5) If you do not record any pre-test interval analyzer response to the span gas concentration, $x_{prespan}$, set $x_{prespan}$ equal to the reference concentration of the span gas:

$x_{prespan} = x_{refspan}$.

(6) If you do not record any pre-test interval analyzer response to the zero gas concentration, $x_{prezero}$, set $x_{prezero}$ equal to the reference concentration of the zero gas:

$x_{prezero} = x_{refzero}$.

(7) Usually the reference concentration of the zero gas, $x_{refzero}$, is zero: $x_{refzero}$ = 0 µmol/mol. However, in some cases you might you know that $x_{refzero}$ has a non-zero concentration. For example, if you zero a CO_2 analyzer using ambient air, you may use the default ambient air concentration of CO_2, which is 375 µmol/mol. In this case, $x_{refzero}$ = 375 µmol/mol. Note that when you zero an analyzer using a non-zero $x_{refzero}$, you must set the analyzer to output the actual $x_{refzero}$ concentration. For example, if $x_{refzero}$ = 375 µmol/mol, set the analyzer to output a value of 375 µmol/mol when the zero gas is flowing to the analyzer.

§ 1065.675 CLD quench verification calculations.

Perform CLD quench-check calculations as follows:

(a) Calculate the amount of water in the span gas, $x_{H2Ospan}$, assuming complete saturation at the span-gas temperature.

(b) Estimate the expected amount of water and CO_2 in the exhaust you sample, x_{H2Oexp} and x_{CO2exp}, respectively, by considering the maximum expected amounts of water in combustion air, fuel combustion products, and dilution air concentrations (if applicable).

(c) Calculate water quench as follows:

$$quench = \left(\frac{x_{NOwet} / (1 - x_{H2Omeas})}{x_{NOdry}} - 1 \right) \cdot \frac{x_{H2Oexp}}{x_{H2Omeas}} + \frac{x_{NO,CO2} - x_{NO,N2}}{x_{NO,N2}} \cdot \frac{x_{CO2exp}}{x_{CO2meas}} \qquad \text{Eq. 1065.672-1}$$

Where:

quench = amount of CLD quench.

x_{NOdry} = measured concentration of NO upstream of a bubbler, according to § 1065.370.

x_{NOwet} = measured concentration of NO downstream of a bubbler, according to § 1065.370.

x_{H2Oexp} = expected maximum amount of water entering the CLD sample port during emission testing.

$x_{H2Omeas}$ = measured amount of water entering the CLD sample port during the quench verification specified in § 1065.370.

$x_{NO,CO2}$ = measured concentration of NO when NO span gas is blended with

CO_2 span gas, according to § 1065.370.

$x_{NO,N2}$ = measured concentration of NO when NO span gas is blended with N2 span gas, according to § 1065.370.

x_{CO2exp} = expected maximum amount of CO_2 entering the CLD sample port during emission testing.

$x_{CO2meas}$ = measured amount of CO_2 entering the CLD sample port during the quench verification specified in § 1065.370.

Example:

x_{NOdry} = 1800.0 μmol/mol
x_{NOwet} = 1760.5 μmol/mol
x_{H2Oexp} = 0.030 mol/mol
$x_{H2Omeas}$ = 0.017 mol/mol
$x_{NO,CO2}$ = 1480.2 μmol/mol
$x_{NO,N2}$ = 1500.8 μmol/mol
x_{CO2exp} = 2.00%
$x_{CO2meas}$ = 3.00%

$$\text{quench} = \left(\frac{1760.5/(1-0.017)}{1800.0} - 1\right) \cdot \frac{0.030}{0.017} + \frac{1480.2 - 1500.8}{1500.8} \cdot \frac{200}{300}$$

quench = −0.00888 − 0.00915 = −1.80%

§ 1065.690 Buoyancy correction for PM sample media.

(a) *General.* Correct PM sample media for their buoyancy in air if you weigh them on a balance. The buoyancy correction depends on the sample media density, the density of air, and the density of the calibration weight used to calibrate the balance. The buoyancy correction does not account for the buoyancy of the PM itself, because the mass of PM typically accounts for only (0.01 to 0.10)% of the total weight. A correction to this small fraction of mass would be at the most 0.010%.

(b) *PM sample media density.* Different PM sample media have different densities. Use the known density of your sample media, or use one of the densities for some common sampling media, as follows:

(1) For PTFE-coated borosilicate glass, use a sample media density of 2300 kg/m³.

(2) For PTFE membrane (film) media with an integral support ring of polymethylpentene that accounts for 95% of the media mass, use a sample media density of 920 kg/m³.

(3) For PTFE membrane (film) media with an integral support ring of PTFE, use a sample media density of 2144 kg/m³.

(c) *Air density.* Because a PM balance environment must be tightly controlled to an ambient temperature of (22 ±1) °C and a dewpoint of (9.5 ±1) °C, air density is primarily function of atmospheric pressure. We therefore specify a buoyancy correction that is only a function of atmospheric pressure. Using good engineering judgment, you may develop and use your own buoyancy correction that includes the effects of temperature and dewpoint on density in addition to the effect of atmospheric pressure.

(d) *Calibration weight density.* Use the stated density of the material of your metal calibration weight. The example calculation in this section uses a density of 8000 kg/m³, but you should know the density of your weight from the calibration weight supplier or the balance manufacturer if it is an internal weight.

(e) *Correction calculation.* Correct the PM sample media for buoyancy using the following equations:

$$m_{cor} = m_{uncor} \cdot \left(\frac{1 - \frac{\rho_{air}}{\rho_{weight}}}{1 - \frac{\rho_{air}}{\rho_{media}}}\right) \qquad \text{Eq. 1065.690-1}$$

Where:
m_{cor} = PM mass corrected for buoyancy.
m_{uncor} = PM mass uncorrected for buoyance.
ρ_{air} = density of air in balance environment.
p_{weight} = density of calibration weight used to span balance.
p_{media} = density of PM sample media, such as a filter.

$$\rho_{air} = \frac{\rho_{abs} \cdot M_{mix}}{R \cdot T_{amb}} \qquad \text{Eq. 1065.690-2}$$

Where:
p_{abs} = absolute pressure in balance environment.
M_{mix} = molar mass of air in balance environment.
R = molar gas constant.
T_{amb} = absolute ambient temperature of balance environment.

Example:
p_{abs} = 99.980 kPa
$T_{sat} = T_{dew}$ = 9.5 °C
Using Eq. 1065.645 − 2,
p_{H20} = 1.1866 kPa
Using Eq. 1065.645 − 3,
x_{H2O} = 0.011868 mol/mol
Using Eq. 1065.640 − 8,
M_{mix} = 28.83563 g/mol
R = 8.314472 J/(mol·K)
T_{amb} = 20 °C

$$\rho_{air} \frac{99.980 \cdot 28.83563}{8.314472 \cdot 293.15}$$

p_{air} = 1.18282 kg/m³
m_{uncorr} = 100.0000 mg
p_{weight} = 8000 kg/m³
p_{media} = 920 kg/m³

$$m_{cor} = 100.000 \cdot \left[\frac{1 - \frac{1.18282}{8000}}{1 - \frac{1.18282}{920}}\right]$$

m_{cor} = 100.1139 mg

§ 1065.695 Data requirements.

(a) To determine the information we require from engine tests, refer to the standard-setting part and request from your Designated Compliance Officer the format used to apply for certification or demonstrate compliance. We may require different information for different purposes, such as for certification applications, approval requests for alternate procedures, selective enforcement audits, laboratory audits, production-line test reports, and field-test reports.

(b) See the standard-setting part and § 1065.25 regarding recordkeeping.

(c) We may ask you the following about your testing, and we may ask you for other information as allowed under the Act:

(1) What approved alternate procedures did you use? For example:
(i) Partial-flow dilution for proportional PM.
(ii) CARB test procedures.
(iii) ISO test procedures.
(2) What laboratory equipment did you use? For example, the make, model, and description of the following:
(i) Engine dynamometer and operator demand.
(ii) Probes, dilution, transfer lines, and sample preconditioning components.
(iii) Batch storage media (such as the bag material or PM filter material).
(3) What measurement instruments did you use? For example, the make, model, and description of the following:
(i) Speed and torque instruments.
(ii) Flow meters.
(iii) Gas analyzers.
(iv) PM balance.
(4) When did you conduct calibrations and performance checks and what were the results? For example, the dates and results of the following:
(i) Linearity checks.
(ii) Interference checks.
(iii) Response checks.
(iv) Leak checks.
(v) Flow meter checks.
(5) What engine did you test? For example, the following:
(i) Manufacturer.
(ii) Family name on engine label.
(iii) Model.
(iv) Model year.
(v) Identification number.
(6) How did you prepare and configure your engine for testing? Consider the following examples:
(i) Dates, hours, duty cycle and fuel used for service accumulation.
(ii) Dates and description of scheduled and unscheduled maintenance.
(iii) Allowable pressure range of intake restriction.
(iv) Allowable pressure range of exhaust restriction.
(v) Charge air cooler volume.
(vi) Charge air cooler outlet temperature, specified engine conditions and location of temperature measurement.
(vii) Fuel temperature and location of measurement.
(viii) Any aftertreatment system configuration and description.
(ix) Any crankcase ventilation configuration and description (e.g., open, closed, PCV, crankcase scavenged).
(7) How did you test your engine? For example:
(i) Constant speed or variable speed.
(ii) Mapping procedure (step or sweep).
(iii) Continuous or batch sampling for each emission.
(iv) Raw or dilute sampling; any dilution-air background sampling.
(v) Duty cycle and test intervals.
(vi) Cold-start, hot-start, warmed-up running.
(vii) Absolute pressure, temperature, and dewpoint of intake and dilution air.
(viii) Simulated engine loads, curb idle transmission torque value.
(ix) Warm-idle speed value and any enhanced-idle speed value.
(x) Simulated vehicle signals applied during testing.
(xi) Bypassed governor controls during testing.
(xii) Date, time, and location of test (*e.g.*, dynamometer laboratory identification).
(xiii) Cooling medium for engine and charge air.
(xiv) Operating temperatures of coolant, head, and block.
(xv) Natural or forced cool-down and cool-down time.
(xvi) Canister loading.
(8) How did you validate your testing? For example, results from the following:
(i) Duty cycle regression statistics for each test interval.
(ii) Proportional sampling.
(iii) Drift.
(iv) Reference PM sample media in PM-stabilization environment.
(9) How did you calculate results? For example, results from the following:
(i) Drift correction.
(ii) Noise correction.
(iii) ''Dry-to-wet'' correction.
(iv) NMHC, CH_4, and contamination correction.
(v) NO_X humidity correction.
(vi) Brake-specific emission formulation—total mass divided by total work, mass rate divided by power, or ratio of mass to work.
(vii) Rounding emission results.
(10) What were the results of your testing? For example:
(i) Maximum mapped power and speed at maximum power.
(ii) Maximum mapped torque and speed at maximum torque.
(iii) For constant-speed engines: no-load governed speed.
(iv) For constant-speed engines: test torque.
(v) For variable-speed engines: maximum test speed.
(vi) Speed versus torque map.
(vii) Speed versus power map.
(viii) Brake-specific emissions over the duty cycle and each test interval.
(ix) Brake-specific fuel consumption.
(11) What fuel did you use? For example:
(i) Fuel that met specifications of subpart H of this part.
(ii) Alternate fuel.
(iii) Oxygenated fuel.
(12) How did you field test your engine? For example:
(i) Data from paragraphs (c)(1), (3), (4), (5), and (9) of this section.
(ii) Probes, dilution, transfer lines, and sample preconditioning components.
(iii) Batch storage media (such as the bag material or PM filter material).
(iv) Continuous or batch sampling for each emission.
(v) Raw or dilute sampling; any dilution air background sampling.
(vi) Cold-start, hot-start, warmed-up running.
(vii) Intake and dilution air absolute pressure, temperature, dewpoint.
(viii) Curb idle transmission torque value.
(ix) Warm idle speed value, any enhanced idle speed value.
(x) Date, time, and location of test (*e.g.*, identify the testing laboratory).
(xi) Proportional sampling validation.
(xii) Drift validation.
(xiii) Operating temperatures of coolant, head, and block.
(xiv) Vehicle make, model, model year, identification number.

Subpart H—Engine Fluids, Test Fuels, Analytical Gases and Other Calibration Standards

§ 1065.701 General requirements for test fuels.

(a) *General.* For all emission measurements, use test fuels that meet the specifications in this subpart, unless the standard-setting part directs otherwise. Section 1065.10(c)(1) does not apply with respect to test fuels. Note that the standard-setting parts generally require that you design your emission controls to function properly when using commercially available fuels, even if they differ from the test fuel.

(b) *Fuels meeting alternate specifications.* We may allow you to use a different test fuel (such as California Phase 2 gasoline) if you show us that using it does not affect your ability to comply with all applicable emission standards using commercially available fuels.

(c) *Fuels not specified in this subpart.* If you produce engines that run on a type of fuel (or mixture of fuels) that we do not specify in this subpart, you must get our written approval to establish the appropriate test fuel. You must show us all the following things before we can specify a different test fuel for your engines:
(1) Show that this type of fuel is commercially available.
(2) Show that your engines will use only the designated fuel in service.

(3) Show that operating the engines on the fuel we specify would unrepresentatively increase emissions or decrease durability.

(d) *Fuel specifications.* The fuel parameters specified in this subpart depend on measurement procedures that are incorporated by reference. For any of these procedures, you may instead rely upon the procedures identified in 40 CFR part 80 for measuring the same parameter. For example, we may identify different reference procedures for measuring gasoline parameters in 40 CFR 80.46.

(e) *Service accumulation and field testing fuels.* If we do not specify a service-accumulation or field-testing fuel in the standard-setting part, use an appropriate commercially available fuel such as those meeting minimum ASTM specifications from the following table:

TABLE 1 OF § 1065.701.—SPECIFICATIONS FOR SERVICE-ACCUMULATION AND FIELD-TESTING FUELS

Fuel type	Subcategory	ASTM specification [1]
Diesel	Light distillate and light blends with residual	D975–04c
	Middle distillate	D6751–03a
	Biodiesel (B100)	D6985–04a
Gasoline	Motor vehicle and minor oxygenate blends	D4814–04b
	Ethanol (Ed75–85)	D5798–99
	Methanol (M70–M85)	D5797–96
Aviation fuel	Aviation gasoline	D910–04a
	Gas turbine	D1655–04a
	Jet B wide cut	D6615–04a
Gas turbine fuel	General	D2880–03

[1] All ASTM specifications are incorporated by reference in § 1065.1010.

§ 1065.703 Distillate diesel fuel.

(a) Distillate diesel fuels for testing must be clean and bright, with pour and cloud points adequate for proper engine operation.

(b) There are three grades of #2 diesel fuel specified for use as a test fuel. See the standard-setting part to determine which grade to use. If the standard-setting part does not specify which grade to use, use good engineering judgment to select the grade that represents the fuel on which the engines will operate in use. The three grades are specified in Table 1 of this section.

(c) You may use the following nonmetallic additives with distillate diesel fuels:

(1) Cetane improver.
(2) Metal deactivator.
(3) Antioxidant, dehazer.
(4) Rust inhibitor.
(5) Pour depressant.
(6) Dye.
(7) Dispersant.
(8) Biocide.

TABLE 1 OF § 1065.703—TEST FUEL SPECIFICATIONS FOR DISTILLATE DIESEL FUEL

Item	Units	Ultra low sulfur	Low sulfur	High sulfur	Reference procedure [1]
Cetane Number		40–50	40–50	40–50	ASTM D 613–03b
Distillation range:					
Initial boiling point	°C	171–204	171–204	171–204	ASTM D 86–04b
10 pct. point		204–238	204–238	204–238	
50 pct. point	243–282	243–282	243–282		
90 pct. point	293–332	293–332	293–332		
Endpoint	321–366	321–366	321–366		
Gravity	°API	32–37	32–37	32–37	ASTM D 287–92
Total sulfur	mg/kg	7–15	300–500	2000–4000	ASTM D 2622–03
Aromatics, minimum. (Remainder shall be paraffins, naphthalenes, and olefins).	g/kg	100	100	100	ASTM D 5186–03
Flashpoint, min	°C	54	54	54	ASTM D 93–02a
Viscosity	cSt	2.0–3.2	2.0–3.2	2.0–3.2	ASTM D 445–04

[1] All ASTM procedures are incorporated by reference in § 1065.1010. See § 1065.701(d) for other allowed procedures.

§ 1065.705 Residual fuel [Reserved]

§ 1065.710 Gasoline.

(a) Gasoline for testing must have octane values that represent commercially available fuels for the appropriate application.

(b) There are two grades of gasoline specified for use as a test fuel. If the standard-setting part requires testing with fuel appropriate for low temperatures, use the test fuel specified for low-temperature testing. Otherwise, use the test fuel specified for general testing. The two grades are specified in Table 1 of this section.

TABLE 1 OF § 1065.710.—TEST FUEL SPECIFICATIONS FOR GASOLINE

Item	Units	General testing	Low-temperature testing	Reference procedure [1]
Distillation Range:				
Initial boiling point	°C	24–35 [2]	24–36	ASTM D 86–04b
10% point	do	49–57	37–48.	
50% point	do	93–110	82–101.	
90% point	do	149–163	158–174.	
End point	do	Maximum, 213	Maximum, 212.	
Hydrocarbon composition:				
1. Olefins	mm^3/m^3	Maximum, 100,000	Maximum, 175,000	ASTM D 1319–03
2. Aromatics	do	Maximum, 350,000	Maximum, 304,000.	
3. Saturates	do	Remainder	Remainder.	
Lead (organic)	g/liter	Maximum, 0.013	Maximum, 0.013	ASTM D 3237–02
Phosphorous	g/liter	Maximum, 0.0013	Maximum, 0.005	ASTM D 3231–02
Total sulfur	mg/kg	Maximum, 80	Maximum, 80	ASTM D 1266–98
Volatility (Reid Vapor Pressure)	kPa	60.0–63.4 [2 3]	77.2–81.4	ASTM D 323–99a

[1] All ASTM procedures are incorporated by reference in § 1065.1010. See § 1065.701(d) for other allowed procedures.
[2] For testing at altitudes above 1 219 m, the specified volatility range is (52 to 55) kPa and the specified initial boiling point range is (23.9 to 40.6) °C.
[3] For testing unrelated to evaporative emissions, the specified range is (55 to 63) kPa.

§ 1065.715 Natural gas.

(a) Natural gas for testing must meet the specifications in the following table:

TABLE 1 OF § 1065.715.—TEST FUEL SPECIFICATIONS FOR NATURAL GAS

Item	Value[1]
1. Methane, CH_4	Minimum, 0.87 mol/mol.
2. Ethane, C_2H_6	Maximum, 0.055 mol/mol.
3. Propane, C_3H_8	Maximum, 0.012 mol/mol.
4. Butane, C_4H_{10}	Maximum, 0.0035 mol/mol.
5. Pentane, C_5H_{12}	Maximum, 0.0013 mol/mol.
6. C_6 and higher	Maximum, 0.001 mol/mol.
7. Oxygen	Maximum, 0.001 mol/mol.
8. Inert gases (sum of CO_2 and N_2)	Maximum, 0.051 mol/mol.

[1] All parameters are based on the reference procedures in ASTM D 1945–03 (incorporated by reference in §1065.1010). See §1065.701(d) for other allowed procedures.

(b) At ambient conditions, natural gas must have a distinctive odor detectable down to a concentration in air not more than one-fifth the lower flammable limit.

§ 1065.720 Liquefied petroleum gas.

(a) Liquefied petroleum gas for testing must meet the specifications in the following table:

TABLE 1 OF § 1065.720.—TEST FUEL SPECIFICATIONS FOR LIQUEFIED PETROLEUM GAS

Item	Value	Reference Procedure[1]
1. Propane, C_3H_8	Minimum, 0.85 m^3/m^3	ASTM D 2163–91
2. Vapor pressure at 38 °C	Maximum, 1400 kPa	ASTM D 1267–02 or 2598–02 [2]
3. Volatility residue evaporated temperature, 35 °C)	Maximum, −38 °C	ASTM D 1837–02a
4. Butanes	Maximum, 0.05 m^3/m^3	ASTM D 2163–91
5. Butenes	Maximum, 0.02 m^3/m^3	ASTM D 2163–91
6. Pentenes and heavier	Maximum, 0.005 m^3/m^3	ASTM D 2163–91
7. Propene	Maximum, 0.1 m^3/m^3	ASTM D 2163–91
8. Residual matter(residue on evap. of 100) ml oil stain observ.).	Maximum, 0.05 ml pass [3]	ASTM D 2158–04
9. Corrosion, copper strip	Maximum, No. 1	ASTM D 1838–03
10. Sulfur	Maximum, 80 mg/kg	ASTM D 2784–98
11. Moisture content	pass	ASTM D 2713–91

[1] All ASTM procedures are incorporated by reference in § 1065.1010. See § 1065.701(d) for other allowed procedures.
[2] If these two test methods yield different results, use the results from ASTM D 1267–02.
[3] The test fuel must not yield a persistent oil ring when you add 0.3 ml of solvent residue mixture to a filter paper in 0.1 ml increments and examine it in daylight after two minutes.

(b) At ambient conditions, liquefied petroleum gas must have a distinctive odor detectable down to a concentration in air not more than one-fifth the lower flammable limit.

§ 1065.740 Lubricants.

(a) Use commercially available lubricating oil that represents the oil that will be used in your engine in use.

(b) You may use lubrication additives, up to the levels that the additive manufacturer recommends.

§ 1065.745 Coolants.

(a) You may use commercially available antifreeze mixtures or other coolants that will be used in your engine in use.

(b) For laboratory testing of liquid-cooled engines, you may use water with or without rust inhibitors.

(c) For coolants allowed in paragraphs (a) and (b) of this section, you may use rust inhibitors and additives required for lubricity, up to the levels that the additive manufacturer recommends.

§ 1065.750 Analytical gases.

Analytical gases must meet the accuracy and purity specifications of this section, unless you can show that other specifications would not affect your ability to show that your engines comply with all applicable emission standards.

(a) Subparts C, D, F, and J of this part refer to the following gas specifications:

(1) Use purified gases to zero measurement instruments and to blend with calibration gases. Use gases with contamination no higher than the highest of the following values in the gas cylinder or at the outlet of a zero-gas generator:

(i) 2% contamination, measured relative to the flow-weighted mean concentration expected at the standard. For example, if you would expect a flow-weighted CO concentration of 100.0 mmol/mol, then you would be allowed to use a zero gas with CO contamination less than or equal to 2.000 mmol/mol.

(ii) Contamination as specified in the following table:

TABLE 1 OF § 1065.750.—GENERAL SPECIFICATIONS FOR PURIFIED GASES

Constituent	Purified air [1]	Purified N_2 [1]
THC (C_1 equivalent)	<0.05 µmol/mol	< 0.05 µmol/mol
CO	<1 µmol/mol	< 1 µmol/mol
CO_2	< 10 µmol/mol	< 10 µmol/mol
O_2	0.205 to 0.215 mol/mol	< 2 µmol/mol
NO_X	< 0.02 µmol/mol	< 0.02 µmol/mol

[1] We do not require these levels of purity to be NIST-traceable.

(2) Use the following gases with a FID analyzer:

(i) *FID fuel.* Use FID fuel with an H_2 concentration of (0.400 ± 0.004) mol/mol, balance He. Make sure the mixture contains no more than 0.05 µmol/mol THC.

(ii) *FID burner air.* Use FID burner air that meets the specifications of purified air in paragraph (a)(1) of this section. For field testing, you may use ambient air.

(iii) *FID zero gas.* Zero flame-ionization detectors with purified gas that meets the specifications in paragraph (a)(1) of this section, except that the purified gas O_2 concentration may be any value. Note that FID zero balance gases may be any combination of purified air and purified nitrogen. We recommend FID analyzer zero gases that contain approximately the flow-weighted mean concentration of O_2 expected during testing.

(iv) *FID propane span gas.* Span and calibrate THC FID with span concentrations of propane, C_3H_8. Calibrate on a carbon number basis of one (C_1). For example, if you use a C_3H_8 span gas of concentration 200 µmol/mol, span a FID to respond with a value of 600 µmol/mol. Note that FID span balance gases may be any combination of purified air and purified nitrogen. We recommend FID analyzer span gases that contain approximately the flow-weighted mean concentration of O_2 expected during testing.

(v) *FID methane span gas.* If you always span and calibrate a CH_4 FID with a nonmethane cutter, then span and calibrate the FID with span concentrations of methane, CH_4. Calibrate on a carbon number basis of one (C_1). For example, if you use a CH_4 span gas of concentration 200 µmol/mol, span a FID to respond with a value of 200 µmol/mol. Note that FID span balance gases may be any combination of purified air and purified nitrogen. We recommend FID analyzer span gases that contain approximately the flow-weighted mean concentration of O_2 expected during testing.

(3) Use the following gas mixtures, with gases traceable within ± 1.0% of the NIST true value or other gas standards we approve:

(i) CH_4, balance purified synthetic air and/or N_2 (as applicable).

(ii) C_2H_6, balance purified synthetic air and/or N_2 (as applicable).

(iii) C_3H_8, balance purified synthetic air and/or N_2 (as applicable).

(iv) CO, balance purified N_2.

(v) CO_2, balance purified N_2.

(vi) NO, balance purified N_2.

(vii) NO_2, balance purified N_2.

(viii) O_2, balance purified N_2.

(ix) C_3H_8, CO, CO_2, NO, balance purified N_2.

(x) C_3H_8, CH_4, CO, CO_2, NO, balance purified N_2.

(4) You may use gases for species other than those listed in paragraph (a)(3) of thissection (such as methanol in air, which you may use to determine response factors), as long as they are traceable to within ±1.0 % of the NIST true value or other similar standards we approve, and meet the stability requirements of paragraph (b) of this section.

(5) You may generate your own calibration gases using a precision blending device, such as a gas divider, to dilute gases with purified N2 or purified synthetic air. If your gas dividers meet the specifications in § 1065.248, and the gases being blended meet the requirements of paragraphs (a)(1) and (3) of this section, the resulting blends are considered to meet the requirements of this paragraph (a).

(b) Record the concentration of any calibration gas standard and its expiration date specified by the gas supplier.

(1) Do not use any calibration gas standard after its expiration date, except as allowed by paragraph (b)(2) of this section.

(2) Calibration gases may be relabeled and used after their expiration date as follows:

(i) Alcohol/carbonyl calibration gases used to determine response factors according to subpart I of this part may be relabeled as specified in subpart I of this part.

(ii) Other gases may be relabeled and used after the expiration date only if we approve it in advance.

(c) Transfer gases from their source to analyzers using components that are dedicated to controlling and transferring only those gases. For example, do not use a regulator, valve, or transfer line for zero gas if those components were previously used to transfer a different gas mixture. We recommend that you label regulators, valves, and transfer lines to prevent contamination. Note that even small traces of a gas mixture in the dead volume of a regulator, valve, or transfer line can diffuse upstream into a high-pressure volume of gas, which would contaminate the entire high-pressure gas source, such as a compressed-gas cylinder.

(d) To maintain stability and purity of gas standards, use good engineering judgment and follow the gas standard supplier's recommendations for storing and handling zero, span, and calibration gases. For example, it may be necessary to store bottles of condensable gases in a heated environment.

§ 1065.790 Mass standards.

(a) *PM balance calibration weights.* Use PM balance calibration weights that are certified as NIST-traceable within 0.1 % uncertainty. Calibration weights may be certified by any calibration lab that maintains NIST-traceability. Make sure your lowest calibration weight has no greater than ten times the mass of an unused PM-sample medium.

(b) *Dynamometer calibration weights.* [Reserved]

Subpart I—Testing With Oxygenated Fuels

§ 1065.801 Applicability.

(a) This subpart applies for testing with oxygenated fuels. Unless the standard-setting part specifies otherwise, the requirements of this subpart do not apply for fuels that contain less than 25% oxygenated compounds by volume. For example, you generally do not need to follow the requirements of this subpart for tests performed using a fuel containing 10% ethanol and 90% gasoline, but you must follow these requirements for tests performed using a fuel containing 85% ethanol and 15% gasoline.

(b) Section 1065.805 applies for all other testing that requires measurement of any alcohols or carbonyls.

(c) This subpart specifies sampling procedures and calculations that are different than those used for non-oxygenated fuels. All other test procedures of this part 1065 apply for testing with oxygenated fuels.

§ 1065.805 Sampling system.

(a) Proportionally dilute engine exhaust, and use batch sampling collect flow-weighted dilute samples of the applicable alcohols and carbonyls at a constant flow rate. You may not use raw sampling for alcohols and carbonyls.

(b) You may collect background samples for correcting dilution air for background concentrations of alcohols and carbonyls.

(c) Maintain sample temperatures within the dilution tunnel, probes, and sample lines less than 121 °C but high enough to prevent aqueous condensation up to the point where a sample is collected. The maximum temperature limit is intended to prevent chemical reaction of the alcohols and carbonyls. The lower temperature limit is intended to prevent loss of the alcohols and carbonyls by dissolution in condensed water. Use good engineering judgment to minimize the amount of time that the undiluted exhaust is outside this temperature range to the extent practical. We recommend that you minimize the length of exhaust tubing before dilution. Extended lengths of exhaust tubing may require preheating, insulation, and cooling fans to limit excursions outside this temperature range.

(d) You may bubble a sample of the exhaust through water to collect alcohols for later analysis. You may also use a photo-acoustic analyzer to quantify ethanol and methanol in an exhaust sample.

(e) Sample the exhaust through cartridges impregnated with 2,4-dinitrophenylhydrazine to collect carbonyls for later analysis. If the standard-setting part specifies a duty cycle that has multiple test intervals (such as multiple engine starts or an engine-off soak phase), you may proportionally collect a single carbonyl sample for the entire duty cycle.For example, if the standard-setting part specifies a six-to-one weighting of hot-start to cold-start emissions, you may collect a single carbonyl sample for the entire duty cycle by using a hot-start sample flow rate that is six times the cold-start sample flow rate.

(f) You may sample alcohols or carbonyls using ''California Non-Methane Organic Gas Test Procedures'' (incorporated by reference in § 1065.1010). If you use this method, follow its calculations to determine the mass of the alcohol/carbonyl in the exhaust sample, but follow subpart G of this part for all other calculations.

(g) Use good engineering judgment to sample other oxygenated hydrocarbon compounds in the exhaust.

§ 1065.845 Response factor determination.

Since FID analyzers generally have an incomplete response to alcohols and carbonyls, determine each FID analyzer's alcohol/carbonyl response factor (such as RF_{MeOH}) after FID optimization. Formaldehyde response is assumed to be zero and does not need to be determined. Use the most recent alcohol/carbonyl response factors to compensate for alcohol/carbonyl response.

(a) Determine the alcohol/carbonyl response factors as follows:

(1) Select a C_3H_8 span gas that meets the specifications of § 1065.750. Note that FID zero and span balance gases may be any combination of purified air or purified nitrogen that meets the specifications of § 1065.750. We recommend FID analyzer zero and span gases that contain approximately the flow-weighted mean concentration of O_2 expected during testing. Record the C_3H_8 concentration of the gas.

(2) Select or prepare an alcohol/carbonyl calibration gas that meets the specifications of § 1065.750 and has a concentration typical of the peak concentration expected at the hydrocarbon standard. Record the calibration concentration of the gas.

(3) Start and operate the FID analyzer according to the manufacturer's instructions.

(4) Confirm that the FID analyzer has been calibrated using C_3H_8. Calibrate on a carbon number basis of one (C_1). For example, if you use a C_3H_8 span gas of concentration 200 μmol/mol, span the FID to respond with a value of 600 μmol/mol.

(5) Zero the FID. Note that FID zero and span balance gases may be any combination of purified air or purified nitrogen that meets the specifications of § 1065.750. We recommend FID analyzer zero and span gases that contain approximately the flow-weighted mean concentration of O_2 expected during testing.

(6) Span the FID with the C_3H_8 span gas that you selected under paragraph (a)(1) of this section.

(7) Introduce at the inlet of the FID analyzer the alcohol/carbonyl calibration gas that you selected under paragraph (a)(2) of this section.

(8) Allow time for the analyzer response to stabilize. Stabilization time may include time to purge the analyzer and to account for its response.

(9) While the analyzer measures the alcohol/carbonyl concentration, record 30 seconds of sampled data. Calculate the arithmetic mean of these values.

(10) Divide the mean measured concentration by the recorded span concentration of the alcohol/carbonyl calibration gas. The result is the FID analyzer's response factor for alcohol/carbonyl, RF_{MeOH}.

(b) Alcohol/carbonyl calibration gases must remain within ±2% of the labeled concentration. You must demonstrate the stability based on a quarterly measurement procedure with a precision of ±2% percent or another method that we approve. Your measurement procedure may incorporate multiple measurements. If the true concentration of the gas changes deviates by more than ±2%, but less than ±10%, the gas may be relabeled with the new concentration.

§ 1065.850 Calculations.

Use the calculations specified in § 1065.665 to determine THCE or NMHCE.

Subpart J—Field Testing and Portable Emission Measurement Systems

§ 1065.901 Applicability.

(a) *Field testing.* This subpart specifies procedures for field-testing engines to determine brake-specific emissions using portable emission measurement systems (PEMS). These procedures are designed primarily for in-field measurements of engines that remain installed in vehicles or equipment in the field. Field-test procedures apply to your engines only as specified in the standard-setting part.

(b) *Laboratory testing.* You may optionally use PEMS for any laboratory testing, as long as the standard-setting part does not prohibit it for certain types of laboratory testing, subject to the following provisions:

(1) Follow the laboratory test procedures specified in this part 1065, according to § 1065.905(e).

(2) Do not apply any PEMS-related field-testing adjustments or ''measurement allowances'' to laboratory emission results or standards.

(3) Do not use PEMS for laboratory measurements if it prevents you from demonstrating compliance with the applicable standards. Some of the PEMS requirements in this part 1065 are less stringent than the corresponding laboratory requirements. Depending on actual PEMS performance, you might therefore need to account for some additional measurement uncertainty when using PEMS for laboratory testing. If we ask, you must show us by engineering analysis that any additional measurement uncertainty due to your use of PEMS for laboratory testing is offset by the extent to which your engine's emissions are below the applicable standards. For example, you might show that PEMS versus laboratory uncertainty represents 5% of the standard, but your engine's deteriorated emissions are at least 20% below the standard for each pollutant.

§ 1065.905 General provisions.

(a) *General.* Unless the standard-setting part specifies deviations from the provisions of this subpart, field testing and laboratory testing with PEMS must conform to the provisions of this subpart.

(b) *Field-testing scope.* Field testing conducted under this subpart may include any normal in-use operation of an engine.

(c) *Field testing and the standard-setting part.* This subpart J specifies procedures for field-testing various categories of engines. See the standard-setting part for specific provisions for a particular type of engine. Before using this subpart's procedures for field testing, read the standard-setting part to answer at least the following questions:

(1) How many engines must I test in the field?

(2) How many times must I repeat a field test on an individual engine?

(3) How do I select vehicles for field testing?

(4) What maintenance steps may I take before or between tests?

(5) What data are needed for a single field test on an individual engine?

(6) What are the limits on ambient conditions for field testing? Note that the ambient condition limits in § 1065.520 do not apply for field testing.

(7) Which exhaust constituents do I need to measure?

(8) How do I account for crankcase emissions?

(9) Which engine and ambient parameters do I need to measure?

(10) How do I process the data recorded during field testing to determine if my engine meets field-testing standards? How do I determine individual test intervals? Note that ''test interval'' is defined in subpart K of this part 1065.

(11) Should I warm up the test engine before measuring emissions, or do I need to measure cold-start emissions during a warm-up segment of in-use operation?

(12) Do any unique specifications apply for test fuels?

(13) Do any special conditions invalidate parts of a field test or all of a field test?

(14) Does any special ''measurement allowance'' apply to field-test emission results or standards, based on using PEMS for field-testing versus using laboratory equipment and instruments for laboratory testing?

(15) Do results of initial field testing trigger any requirement for additional field testing or laboratory testing?

(16) How do I report field-testing results?

(d) *Field testing and this part 1065.* Use the following specifications for field testing:

(1) Use the applicability and general provisions of subpart A of this part.

(2) Use equipment specifications in § 1065.101 and in the sections from § 1065.140 to the end of subpart B of this part. Section 1065.910 specifies additional equipment specific to field testing.

(3) Use measurement instruments in subpart C of this part, except as specified in § 1065.915.

(4) Use calibrations and verifications in subpart D of this part, except as specified in § 1065.920. Section 1065.920 also specifies additional calibrations and verifications for field testing.

(5) Use the provisions of the standard-setting part for selecting and maintaining engines in the field instead of the specifications in subpart E of this part.

(6) Use the procedures in §§ 1065.930 and 1065.935 to start and run a field test. If you use a gravimetric balance for PM, weigh PM samples according to §§ 1065.590 and 1065.595.

(7) Use the calculations in subpart G of this part to calculate emissions over each test interval. Note that ''test interval'' is defined in subpart K of this part 1065, and that the standard setting part indicates how to determine test intervals for your engine.

Section 1065.940 specifies additional calculations for field testing. Use any calculations specified in the standard-setting part to determine if your engines meet the field-testing standards. The standard-setting part may also contain additional calculations that determine when further field testing is required.

(8) Use a typical in-use fuel meeting the specifications of § 1065.701(d).

(9) Use the lubricant and coolant specifications in § 1065.740 and § 1065.745.

(10) Use the analytical gases and other calibration standards in § 1065.750 and § 1065.790.

(11) If you are testing with oxygenated fuels, use the procedures specified for testing with oxygenated fuels in subpart I of this part.

(12) Apply the definitions and reference materials in subpart K of this part.

(e) *Laboratory testing using PEMS.* Use the following specifications when using PEMS for laboratory testing:

(1) Use the applicability and general provisions of subpart A of this part.

(2) Use equipment specifications in subpart B of this part. Section 1065.910

specifies additional equipment specific to testing with PEMS.

(3) Use measurement instruments in subpart C of this part, except as specified in § 1065.915.

(4) Use calibrations and verifications in subpart D of this part, except as specified in § 1065.920. Section 1065.920 also specifies additional calibration and verifications for PEMS.

(5) Use the provisions of § 1065.401 for selecting engines for testing. Use the provisions of subpart E of this part for maintaining engines, except as specified in the standard-setting part.

(6) Use the procedures in subpart F of this part and in the standard-setting part to start and run a laboratory test.

(7) Use the calculations in subpart G of this part to calculate emissions over the applicable duty cycle. Section 1065.940 specifies additional calculations for testing with PEMS.

(8) Use a fuel meeting the specifications of subpart H of this part, as specified in the standard-setting part.

(9) Use the lubricant and coolant specifications in § 1065.740 and § 1065.745.

(10) Use the analytical gases and other calibration standards in § 1065.750 and § 1065.790.

(11) If you are testing with oxygenated fuels, use the procedures specified for testing with oxygenated fuels in subpart I of this part.

(12) Apply the definitions and reference materials in subpart K of this part.

(f) *Summary.* The following table summarizes the requirements of paragraphs (d) and (e) of this section:

TABLE 1 OF § 1065.905.—SUMMARY OF TESTING REQUIREMENTS THAT ARE SPECIFIED OUTSIDE OF THIS SUBPART J [1]

Subpart	Applicability for field testing	Applicability for laboratory testing with PEMS
A: Applicability and general provisions	Use all	Use all.
B: Equipment for testing	Use § 1065.101 and § 1065.140 through the end of subpart B. § 1065.910 specifies equipment specific to field testing.	Use all. § 1065.910 specifies equipment specific to laboratory testing with PEMS.
C: Measurement instruments	Use all	Use all.
	§ 1065.915 allows deviations	§ 1065.915 allows deviations.
D: Calibrations and verifications	Use all	Use all.
	§ 1065.920 allows deviations, but also has additional specifications.	§ 1065.920 allows deviations, but also has additional specifications.
E: Test engine selection, maintenance, and durability.	Do not use	Use all.
	Use standard-setting part	
F: Running an emission test in the laboratory	Use §§ 1065.590 and 1065.595 for PM	Use all.
	§ 1065.930 and § 1065.935 to start and run a field test.	
G: Calculations and data requirements	Use all	Use all.
	Use standard-setting part	Use standard-setting part.
	§ 1065.940 has additional calculation instructions.	§ 1065.940 has additional calculation instructions.
H: Fuels, engine fluids, analytical gases, and other calibration materials.	Use fuels specified in § 1065.701(d)	Use fuels from subpart H of this part as specified in standard-setting part.
	Use lubricant and coolant specifications in § 1065.740 and § 1065.745.	Use lubricant and coolant specifications in subpart H of this part.
	Use analytical gas specifications and other calibration standards in § 1065.750 and § 1065.790.	Use analytical gas specifications and other calibration standards in § 1065.750 and § 1065.790.
I: Testing with oxygenated fuels	Use all	Use all.
K: Definitions and reference materials	Use all	Use all.

[1] Refer to paragraphs (d) and (e) of this section for complete specifications.

§ 1065.910 PEMS auxiliary equipment for field testing.

For field testing you may use various types of auxiliary equipment to attach PEMS to a vehicle or engine and to power PEMS.

(a) When you use PEMS, you will likely route engine exhaust to a raw-exhaust flow meter and sample probes. Route the engine exhaust as follows:

(1) *Flexible connections.* Use short flexible connectors at the end of the engine's exhaust pipe.

(i) You may use flexible connectors to enlarge or reduce the exhaust-pipe diameter to match that of your test equipment.

(ii) Use flexible connectors that do not exceed a length of three times their largest inside diameter.

(iii) Use four-ply silicone-fiberglass fabric with a temperature rating of at least 315 °C for flexible connectors. You may use connectors with a spring-steel wire helix for support and you may use Nomex™ coverings or linings for durability. You may also use any other material with equivalent permeation-resistance and durability, as long as it seals tightly around tailpipes and does not react with exhaust.

(iv) Use stainless-steel hose clamps to seal flexible connectors to the outside diameter of tailpipes, or use clamps that seal equivalently.

(v) You may use additional flexible connectors to connect to flow meters and sample probe locations.

(2) *Raw exhaust tubing.* Use rigid 300 series stainless steel tubing to connect between flexible connectors. Tubing may be straight or bent to accommodate vehicle geometry. You may use ''T'' or ''Y'' fittings made of 300 series stainless steel tubingto join exhaust from multiple tailpipes, or you may cap or plug redundant tailpipes if the engine manufacturer recommends it.

(3) *Exhaust back pressure.* Use connectors and tubing that do not increase back pressure so much that it exceeds the manufacturer's maximum specified exhaust restriction. You may verify this at the maximum exhaust flow rate by measuring back pressure at the manufacturer-specified location with your system connected. You may also perform an engineering analysis to verify proper back pressure, taking into account the maximum exhaust flow rate expected, the field test system's flexible connectors, and the tubing's characteristics for pressure drops versus flow.

(b) For vehicles or other motive equipment, we recommend installing PEMS in the same location where passenger might sit. Follow PEMS manufacturer instructions for installing PEMS in vehicle cargo spaces, vehicle trailers, or externally such that PEMS is directly exposed to the outside environment. Locate PEMS where it will be subject to minimal sources of the following parameters:

(1) Ambient temperature changes.

(2) Ambient pressure changes.

(3) Electromagnetic radiation.

(4) Mechanical shock and vibration.

(5) Ambient hydrocarbons—if using a FID analyzer that uses ambient air as FID burner air.

(c) *Mounting hardware.* Use mounting hardware as required for securing flexible connectors, exhaust tubing, ambient sensors, and other equipment. Use structurally sound mounting points such as vehicle frames, trailer hitch receivers, and payload tie-down fittings. We recommend mounting hardware such as clamps, suction cups, and magnets that are specifically designed for vehicle applications. We also recommend considering mounting hardware such as commercially available bicycle racks, trailer hitches, and luggage racks.

(d) *Electrical power.* Field testing may require portable electrical power to run your test equipment. Power your equipment, as follows:

(1) You may use electrical power from the vehicle, up to the highest power level, such that all the following are true:

(i) The vehicle power system is capable of safely supplying your power, such that your demand does not overload the vehicle's power system.

(ii) The engine emissions do not change significantly when you use vehicle power.

(iii) The power you demand does not increase output from the engine by morethan 1% of its maximum power.

(2) You may install your own portable power supply. For example, you may use batteries, fuel cells, a portable generator, or any other power supply to supplement or replace your use of vehicle power. However, you must not supply power to the vehicle's power system under any circumstances.

§ 1065.915 PEMS instruments.

(a) *Instrument specifications.* We recommend that you use PEMS that meet the specifications of subpart C of this part. For field testing of for laboratory testing with PEMS, the specifications in the following table apply instead of the specifications in Table 1 of § 1065.205.

TABLE 1 OF § 1065.915.—RECOMMENDED MINIMUM PEMS MEASUREMENT INSTRUMENT PERFORMANCE

Measurement	Measured quantity symbol	Rise time and fall time	Recording update frequency	Accuracy [1]	Repeatability [1]	Noise [1]
Engine speed transducer	fn	1 s	1 Hz means	5.0% of pt. or 1.0% of max.	2.0% of pt. or 1.0% of max.	0.5% of max.
Engine torque estimator, BSFC (This is a signal from an engine's ECM).	T or BSFC	1 s	1 Hz means	8.0% of pt. or 5% of max.	2.0% of pt. or 1.0% of max.	1.0% of max.
General pressure transducer (not a part of another instrument).	p	5 s	1 Hz	5.0% of pt. or 5.0% of max.	2.0% of pt. or 0.5% of max.	1.0% of max.
Atmospheric pressure meter	patmos	50 s	0.1 Hz	250 Pa	200 Pa	100 Pa.
General temperature sensor (not a part of another instrument).	T	5 s	1 Hz	1.0% of pt. K or 5 K.	0.5% of pt. K or 2 K.	0.5% of max 0.5 K.
General dewpoint sensor	Tdew	50 s	0.1 Hz	3 K	1 K	1 K.
Exhaust flow meter	$\dot{n}$	1 s	1 Hz means	5.0% of pt. or 3.0% of max.	2.0% of pt	2.0% of max.
Dilution air, inlet air, exhaust, and sample flow meters.	$\dot{n}$	1 s	1 Hz means	2.5% of pt. or 1.5% of max.	1.25% of pt. or 0.75% of max.	1.0% of max.
Continuous gas analyzer	X	5 s	1 Hz	4.0% of pt. or 4.0% of meas.	2.0% of pt. or 2.0% of meas.	1.0% of max.
Gravimetric PM balance	m_{PM}	N/A	N/A	*See* § 1065.790	0.5 μg	N/A
Inertial PM balance	m_{PM}	5 s	1 Hz	4.0% of pt. or 4.0% of meas.	2.0% of pt. or 2.0% of meas.	1.0% of max.

[1] Accuracy, repeatability, and noise are all determined with the same collected data, as described in § 1065.305, and based on absolute values. "pt." refers to the overall flow-weighted mean value expected at the standard; "max." refers to the peak value expected at the standard over any test interval, not the maximum of the instrument's range; "meas" refers to the actual flow-weighted mean measured over any test interval.

(b) *Redundant measurements.* For all PEMS described in this subpart, you may use data from multiple instruments to calculate test results for a single test. If you use redundant systems, use good engineering judgment to use multiple measured values in calculations or to disregard individual measurements. Note that you must keep your results from all measurements, as described in § 1065.25. This requirement applies whether or not you actually use the measurements in your calculations.

(c) *Field-testing ambient effects on PEMS.* PEMS must be only minimally affected by ambient conditions such as temperature, pressure, humidity, physical orientation, mechanical shock and vibration, electromagnetic radiation, and ambient hydrocarbons. Follow the PEMS manufacturer's instructions for proper installation to isolate PEMS from ambient conditions that affect their performance. If a PEMS is inherently affected by ambient conditions that you cannot control, you must monitor those conditions and adjust the PEMS signals to compensate for the ambient effect. The standard-setting part may also specify the use of one or more field-testing adjustments or "measurement allowances" that you apply to results or standards to account for ambient effects on PEMS.

(d) *ECM signals.* You may use signals from the engine's electronic control module (ECM) in place of values measured by individual instruments within a PEMS, subject to the following provisions:

(1) *Recording ECM signals.* If your ECM updates a broadcast signal more frequently than 1 Hz, take one of the following steps:

(i) Use PEMS to sample and record the signal's value more frequently—up

to 5 Hz maximum. Calculate and record the 1 Hz mean of the more frequently updated data.

(ii) Use PEMS to electronically filter the ECM signals to meet the rise time and fall time specifications in Table 1 of this section. Record the filtered signal at 1 Hz.

(2) *Omitting ECM signals.* Replace any discontinuous or irrational ECM data with linearly interpolated values from adjacent data.

(3) *Aligning ECM signals with other data.* You must perform time-alignment and dispersion of ECM signals, according to PEMS manufacturer instructions and using good engineering judgment.

(4) *ECM signals for determining test intervals.* You may use any combination of ECM signals, with or without other measurements, to determine the start-time and end-time of a test interval.

(5) *ECM signals for determining brake-specific emissions.* You may use any combination of ECM signals, with or without other measurements, to estimate engine speed, torque, and brake-specific fuel consumption (BSFC, in units of mass of fuel per kW-hr) for use in brake-specific emission calculations. We recommend that the overall performance of any speed, torque, or BSFC estimator should meet the performance specifications in Table 1 of this section. We recommend using one of the following methods:

(i) *Speed.* Use the engine speed signal directly from the ECM. This signal is generally accurate and precise. You may develop your own speed algorithm based on other ECM signals.

(ii) *Torque.* Use one of the following:

(A) *ECM torque.* Use the engine-torque signal directly from the ECM, if broadcast. Determine if this signal is proportional to indicated torque or brake torque. If it is proportional to indicated torque, subtract friction torque from indicated torque and record the result as brake torque. Friction torque may be a separate signal broadcast from the ECM or you may have to determine it from laboratory data as a function of engine speed.

(B) *ECM %-load.* Use the %-load signal directly from the ECM, if broadcast. Determine if this signal is proportional to indicated torque or brake torque. If it is proportional to indicated torque, subtract the minimum %-load value from the %-load signal. Multiply this result by the maximum brake torque at the corresponding engine speed. Maximum brake torque versus speed information is commonly published by the engine manufacturer.

(C) *Your algorithms.* You may develop and use your own combination of ECM signals to determine torque.

(iii) *BSFC.* Use one of the following:

(A) Use ECM engine speed and ECM fuel flow signals to interpolate brake-specific fuel consumption data, which might be available from an engine laboratory as a function of ECM engine speed and ECM fuel signals.

(B) Use a single BSFC value that approximates the BSFC value over a test interval (as defined in subpart K of this part). This value may be a nominal BSFC value for all engine operation determined over one or more laboratory duty cycles, or it may be any other BSFC that we approve. If you use a nominal BSFC, we recommend that you select a value based on the BSFC measured over laboratory duty cycles that best represent the range of engine operation that defines a test interval for field-testing.

(C) You may develop and use your own combination of ECM signals to determine BSFC.

(iv) *Other ECM signals.* You may ask to use other ECM signals for determining brake-specific emissions, such as ECM fuel flow or ECM air flow. We must approve the use of such signals in advance.

(6) *Permissible deviations.* ECM signals may deviate from the specifications of this part 1065, but the expected deviation must not prevent you from demonstrating that you meet the applicable standards. For example, your emission results may be sufficiently below an applicable standard, such that the deviation would not significantly change the result. As another example, a very low engine-coolant temperature may define a logical statement that determines when a test interval may start. In this case, even if the ECM's sensor for detecting coolant temperature was not very accurate or repeatable, its output would never deviate so far as to significantly affect when a test interval may start.

§ 1065.920 PEMS Calibrations and verifications.

(a) *Subsystem calibrations and verifications.* Use all the applicable calibrations and verifications in subpart D of this part, including the linearity verifications in § 1065.307, to calibrate and verify PEMS. Note that a PEMS does not have to meet the system-response specifications of § 1065.308 if it meets the overall verification described in paragraph (b) of this section.

(b) *Overall verification.* We require only that you maintain a record showing that the particular make, model, and configuration of your PEMS meets this verification. We recommend that you generate your own record to show that your specific PEMS meets this verification, but you may also rely on data and other information from the PEMS manufacturer. If you upgrade or change the configuration of your PEMS, your record must show that your new configuration meets this verification. The verification consists of operating an engine over a duty cycle in the laboratory and statistically comparing data generated and recorded by the PEMS with data simultaneously generated and recorded by laboratory equipment as follows:

(1) Mount an engine on a dynamometer for laboratory testing. Prepare the laboratory and PEMS for emission testing, as described in this part, to get simultaneous measurements. We recommend selecting an engine with emission levels close to the applicable duty-cycle standards, if possible.

(2) Select or create a duty cycle that has all the following characteristics:

(i) Engine operation that represents normal in-use speeds, loads, and degree of transient activity. Consider using data from previous field tests to generate a cycle.

(ii) A duration of (20 to 40) min.

(iii) At least 50% of engine operating time must include at least 10 valid test intervals for calculating emission levels for field testing. For example, for highway compression-ignition engines, select a duty cycle in which at least 50% of the engine operating time can be used to calculate valid NTE events.

(3) Starting with a warmed-up engine, run a valid emission test with the duty cycle from paragraph (b)(2) of this section. The laboratory and PEMS must both meet applicable validation requirements, such as drift validation, hydrocarbon contamination validation, and proportional validation.

(4) Determine the brake-specific emissions for each test interval for both laboratory and the PEMS measurements, as follows:

(i) For both laboratory and PEMS measurements, use identical values to determine the beginning and end of each test interval.

(ii) For both laboratory and PEMS measurements, use identical values to determine total work over each test interval.

(iii) Apply any ''measurement allowance'' to the PEMS data. If the measurement allowance is normally added to the standard, subtract the measurement allowance from the PEMS brake-specific emission result.

(iv) Round results to the same number of significant digits as the standard.

(5) Repeat the engine duty cycle and calculations until you have at least 100 valid test intervals.

(6) For each test interval and emission, subtract the lab result from the PEMS result.

(7) If for each constituent, the PEMS passes this verification if any one of the following are true:

(i) 91% or more of the differences are zero or less than zero.

(ii) The entire set of test-interval results passes the 95% confidence alternate-procedure statistics for field testing (t-test and F-test) specified in subpart A of this part.

§ 1065.925 PEMS preparation for field testing.

Take the following steps to prepare PEMS for field testing:

(a) Verify that ambient conditions at the start of the test are within the limits specified in the standard-setting part. Continue to monitor these values to determine if ambient conditions exceed the limits during the test.

(b) Install a PEMS and any accessories needed to conduct a field test.

(c) Power the PEMS and allow pressures, temperatures, and flows to stabilize to their operating set points.

(d) Bypass or purge any gaseous sampling PEMS instruments with ambient air until sampling begins to prevent system contamination from excessive cold-start emissions.

(e) Conduct calibrations and verifications.

(f) Operate any PEMS dilution systems at their expected flow rates using a bypass.

(g) If you use a gravimetric balance to determine whether an engine meets an applicable PM standard, follow the procedures for PM sample preconditioning and tare weighing as described in § 1065.590. Operate the PM-sampling system at its expected flow rates using a bypass.

(h) Verify the amount of contamination in the PEMS HC sampling system as follows:

(1) Select the HC analyzers' ranges for measuring the maximum concentration expected at the HC standard.

(2) Zero the HC analyzers using a zero gas introduced at the analyzer port. When zeroing the FIDs, use the FIDs' burner air that would be used for in-use measurements (generally either ambient air or a portable source of burner air).

(3) Span the HC analyzers using span gas introduced at the analyzer port. When spanning the FIDs, use the FIDs' burner air that would be used in-use (for example, use ambient air or a portable source of burner air).

(4) Overflow zero air at the HC probe or into a fitting between the HC probe and the transfer line.

(5) Measure the HC concentration in the sampling system:

(i) For continuous sampling, record the mean HC concentration as overflow zero air flows.

(ii) For batch sampling, fill the sample medium and record its mean concentration.

(6) Record this value as the initial HC concentration, x_{HCinit}, and use it to correct measured values as described in § 1065.660.

(7) If the initial HC concentration exceeds the greater of the following values, determine the source of the contamination and take corrective action, such as purging the system or replacing contaminated portions:

(i) 2% of the flow-weighted mean concentration expected at the standard or measured during testing.

(ii) 2 μmol/mol.

(8) If corrective action does not resolve the deficiency, you use a contaminated HC system if it does not prevent you from demonstrating compliance with the applicable emission standards.

§ 1065.930 Engine starting, restarting, and shutdown.

Unless the standard-setting part specifies otherwise, start, restart, and shut down the test engine for field testing as follows:

(a) Start or restart the engine as described in the owners manual.

(b) If the engine does not start after 15 seconds of cranking, stop cranking and determine the reason it failed to start. However, you may crank the engine longer than 15 seconds, as long as the owners manual or the service-repair manual describes the longer cranking time as normal.

(c) Respond to engine stalling with the following steps:

(1) If the engine stalls during a required warm-up before emission sampling begins, restart the engine and continue warm-up.

(2) If the engine stalls at any other time after emission sampling begins, restart the engine and continue testing.

(d) Shut down and restart the engine according to the manufacturer's specifications, as needed during normal operation in-use, but continue emission sampling until the field test is complete.

§ 1065.935 Emission test sequence for field testing.

(a) Time the start of field testing as follows:

(1) If the standard-setting part requires only hot-stabilized emission measurements, operate the engine in-use until the engine coolant, block, or head absolute temperature is within ±10% of its mean value for the previous 2 min or until an engine thermostat controls engine temperature with coolant or air flow.

(2) If the standard-setting part requires hot-start emission measurements, shut down the engine after at least 2 min at the temperature tolerance specified in paragraph (a)(1) of this section. Start the field test within 20 min of engine shutdown.

(3) If the standard-setting part requires cold-start emission measurements, proceed to the steps specified in paragraph (b) of this section.

(b) Take the following steps before emission sampling begins:

(1) For batch sampling, connect clean storage media, such as evacuated bags or tare-weighed PM sample media.

(2) Operate the PEMS according to the instrument manufacturer's instructions and using good engineering judgment.

(3) Operate PEMS heaters, dilution systems, sample pumps, cooling fans, and the data-collection system.

(4) Pre-heat or pre-cool PEMS heat exchangers in the sampling system to within their tolerances for operating temperatures.

(5) Allow all other PEMS components such as sample lines, filters, and pumps to stabilize at operating temperature.

(6) Verify that no significant vacuum-side leak exists in the PEMS, as described in § 1065.345.

(7) Adjust PEMS flow rates to desired levels, using bypass flow if applicable.

(8) Zero and span all PEMS gas analyzers using NIST-traceable gases that meet the specifications of § 1065.750.

(c) Start testing as follows:

(1) Before the start of the first test interval, zero or re-zero any PEMS electronic integrating devices, as needed.

(2) If the engine is already running and warmed up and starting is not part of field testing, start the field test by simultaneously starting to sample exhaust, record engine and ambient data, and integrate measured values using a PEMS.

(3) If engine starting is part of field testing, start field testing by simultaneously starting to sample from the exhaust system, record engine and ambient data, and integrate measured values using a PEMS. Then start the engine.

(d) Continue the test as follows:

(1) Continue to sample exhaust, record data and integrate measured values throughout normal in-use operation of the engine.

(2) Between each test interval, zero or re-zero any electronic integrating devices, and reset batch storage media, as needed.

(3) The engine may be stopped and started, but continue to sample emissions throughout the entire field test.

(4) Conduct periodic verifications such as zero and span verifications on PEMS gas analyzers, as recommended by the PEMS manufacturer or as indicated by good engineering judgment. Results from these verifications will be used to calculate and correct for drift according to paragraph (g) of this section. Do not include data recorded during verifications in emission calculations.

(5) You may periodically condition and analyze batch samples in-situ, including PM samples; for example you may condition an inertial PM balance substrate if you use an inertial balance to measure PM.

(6) You may have personnel monitoring and adjusting the PEMS during a test, or you may operate the PEMS unattended.

(e) Stop testing as follows

(1) Continue sampling as needed to get an appropriate amount of emission measurement, according to the standard setting part. If the standard-setting part does not describe when to stop sampling, develop a written protocol before you start testing to establish how you will stop sampling. You may not determine when to stop testing based on measured values.

(2) At the end of the field test, allow the sampling systems' response times to elapse and then stop sampling. Stop any integrators and indicate the end of the test cycle on the data-collection medium.

(3) You may shut down the engine before or after you stop sampling.

(f) For any proportional batch sample, such as a bag sample or PM sample, verify for each test interval whether or not proportional sampling was maintained according to § 1065.545. Void the sample for any test interval that did not maintain proportional sampling according to § 1065.545.

(g) Take the following steps after emission sampling is complete:

(1) As soon as practical after the emission sampling, analyze any gaseous batch samples.

(2) If you used dilution air, either analyze background samples or assume that background emissions were zero. Refer to § 1065.140 for dilution-air specifications.

(3) After quantifying all exhaust gases, record mean analyzer values after stabilizing a zero gas to each analyzer, then record mean analyzer values after stabilizing the span gas to the analyzer. Stabilization may include time to purge an analyzer of any sample gas, plus any additional time to account for analyzer response. Use these recorded values to correct for drift as described in § 1065.550.

(4) Invalidate any test intervals that do not meet the range criteria in § 1065.550. Note that it is acceptable that analyzers exceed 100% of their ranges when measuring emissions between test intervals, but not during test intervals. You do not have to retest an engine in the field if the range criteria are not met.

(5) Invalidate any test intervals that do not meet the drift criterion in § 1065.550. For test intervals that do meet the drift criterion, correct those test intervals for drift according to § 1065.672 and use the drift corrected results in emissions calculations.

(6) Unless you weighed PM in-situ, such as by using an inertial PM balance, place any used PM samples into covered or sealed containers and return them to the PM-stabilization environment and weigh them as described in § 1065.595.

§ 1065.940 Emission calculations.

Perform emission calculations as described in § 1065.650 to calculate brake-specific emissions for each test interval using any applicable information and instructions in the standard-setting part.

Subpart K—Definitions and Other Reference Information

§ 1065.1001 Definitions.

The definitions in this section apply to this part. The definitions apply to all subparts unless we note otherwise. All undefined terms have the meaning the Act gives them. The definitions follow:

300 series stainless steel means any stainless steel alloy with a Unified Numbering System for Metals and Alloys number designated from S30100 to S39000. For all instances in this part where we specify 300 series stainless steel, such parts must also have a smooth inner-wall construction. We recommend an average roughness, R_a, no greater than 4 μm.

Accuracy means the absolute difference between a reference quantity and the arithmetic mean of ten mean measurements of that quantity. Determine instrument accuracy, repeatability, and noise from the same data set. We specify a procedure for determining accuracy in § 1065.305.

Act means the Clean Air Act, as amended, 42 U.S.C. 7401–7671q.

Adjustable parameter means any device, system, or element of design that someone can adjust (including those which are difficult to access) and that, if adjusted, may affect emissions or engine performance during emission testing or normal in-use operation. This includes, but is not limited to, parameters related to injection timing and fueling rate. In some cases, this may exclude a parameter that is difficult to access if it cannot be adjusted to affect emissions without significantly degrading engine performance, or if it will not be adjusted in a way that affects emissions during in-use operation.

Aerodynamic diameter means the diameter of a spherical water droplet that settles at the same constant velocity as the particle being sampled.

Aftertreatment means relating to a catalytic converter, particulate filter, or any other system, component, or technology mounted downstream of the exhaust valve (or exhaust port) whose design function is to decrease emissions in the engine exhaust before it is exhausted to the environment. Exhaust-gas recirculation (EGR) and turbochargers are not aftertreatment.

Allowed procedures means procedures that we either specify in this part 1065 or in the standard-setting part or approve under § 1065.10.

Alternate procedures means procedures allowed under § 1065.10(c)(7).

Applicable standard means an emission standard to which an engine is subject; or a family emission limit to which an engine is certified under an emission credit program in the standard-setting part.

Aqueous condensation means the precipitation of water-containing constituents from a gas phase to a liquid phase. Aqueous condensation is a function of humidity, pressure, temperature, and concentrations of other constituents such as sulfuric acid. These parameters vary as a function of engine intake-air humidity, dilution-air humidity, engine air-to-fuel ratio, and fuel composition—including the amount of hydrogen and sulfur in the fuel.

Atmospheric pressure means the wet, absolute, atmospheric static pressure. Note that if you measure atmospheric pressure in a duct, you must ensure that there are negligible pressure losses between the atmosphere and your measurement location, and you must account for changes in the duct's static pressure resulting from the flow.

Auto-ranging means a gas analyzer function that automatically changes the analyzer digital resolution to a larger range of concentrations as the concentration approaches 100% of the analyzer's current range. Auto-ranging

does not mean changing an analog amplifier gain within an analyzer.

Auxiliary emission-control device means any element of design that senses temperature, motive speed, engine RPM, transmission gear, or any other parameter for the purpose of activating, modulating, delaying, or deactivating the operation of any part of the emission-control system.

Brake power has the meaning given in the standard-setting part. If it is not defined in the standard-setting part, brake power means the usable power output of the engine, not including power required to fuel, lubricate, or heat the engine, circulate coolant to the engine, or to operate aftertreatment devices. If the engine does not power these accessories during a test, subtract the work required to perform these functions from the total work used in brake-specific emission calculations. Subtract engine fan work from total work only for air-cooled engines.

C_1 equivalent (or basis) means a convention of expressing HC concentrations based on the total number of carbon atoms present, such that the C_1 equivalent of a molar HC concentration equals the molar concentration multiplied by the mean number of carbon atoms in each HC molecule. For example, the C_1 equivalent of 10 μmol/mol of propane (C_3H_8) is 30 μmol/mol. C_1 equivalent molar values may be denoted as ''ppmC'' in the standard-setting part.

Calibration means the process of setting a measurement system's response so that its output agrees with a range of reference signals. Contrast with ''verification''.

Certification means relating to the process of obtaining a certificate of conformity for an engine family that complies with the emission standards and requirements in the standard-setting part.

Compression-ignition means relating to a type of reciprocating, internal-combustion engine that is not a spark-ignition engine.

Confidence interval means the range associated with a probability that a quantity will be considered statistically equivalent to a reference quantity.

Constant-speed engine means an engine whose certification is limited to constant-speed operation. Engines whose constant-speed governor function is removed or disabled are no longer constant-speed engines.

Constant-speed operation means engine operation with a governor that automatically controls the operator demand to maintain engine speed, even under changing load. Governors do not always maintain speed exactly constant. Typically speed can decrease (0.1 to 10)% below the speed at zero load, such that the minimum speed occurs near the engine's point of maximum power.

Coriolis meter means a flow-measurement instrument that determines the mass flow of a fluid by sensing the vibration and twist of specially designed flow tubes as the flow passes through them. The twisting characteristic is called the Coriolis effect. According to Newton's Second Law of Motion, the amount of sensor tube twist is directly proportional to the mass flow rate of the fluid flowing through the tube. See § 1065.220.

Designated Compliance Officer means the Manager, Engine Programs Group (6405–J), U.S. Environmental Protection Agency, 1200 Pennsylvania Ave., NW., Washington, DC 20460.

Dewpoint means a measure of humidity stated as the equilibrium temperature at which water condenses under a given pressure from moist air with a given absolute humidity. Dewpoint is specified as a temperature in °C or K, and is valid only for the pressure at which it is measured. See § 1065.645 to determine water vapor mole fractions from dewpoints using the pressure at which the dewpoint is measured.

Discrete-mode means relating to a discrete-mode type of steady-state test, as described in the standard-setting part.

Dispersion means either:

(1) The broadening and lowering of a signal due to any fluid capacitance, fluid mixing, or electronic filtering in a sampling system. (Note: To adjust a signal so its dispersion matches that of another signal, you may adjust the system's fluid capacitance, fluid mixing, or electronic filtering.)

(2) The mixing of a fluid, especially as a result of fluid mechanical forces or chemical diffusion.

Drift means the difference between a zero or calibration signal and the respective value reported by a measurement instrument immediately after it was used in an emission test, as long as you zeroed and spanned the instrument just before the test.

Duty cycle means a series of speed and torque values (or power values) that an engine must follow during a laboratory test. Duty cycles are specified in the standard-setting part. A single duty cycle may consist of one or more test intervals. For example, a duty cycle may be a ramped-modal cycle, which has one test interval; a cold-start plus hot-start transient cycle, which has two test intervals; or a discrete-mode cycle, which has one test interval for each mode.

Electronic control module means an engine's electronic device that uses data from engine sensors to control engine parameters.

Emission-control system means any device, system, or element of design that controls or reduces the emissions of regulated pollutants from an engine.

Emission-data engine means an engine that is tested for certification. This includes engines tested to establish deterioration factors.

Emission-related maintenance means maintenance that substantially affects emissions or is likely to substantially affect emission deterioration.

Engine means an engine to which this part applies.

Engine family means a group of engines with similar emission characteristics throughout the useful life, as specified in the standard-setting part.

Engine governed speed means the engine operating speed when it is controlled by the installed governor.

Exhaust-gas recirculation means a technology that reduces emissions by routing exhaust gases that had been exhausted from the combustion chamber(s) back into the engine to be mixed with incoming air before or during combustion. The use of valve timing to increase the amount of residual exhaust gas in the combustion chamber(s) that is mixed with incoming air before or during combustion is not considered exhaust-gas recirculation for the purposes of this part.

Fall time, t_{90-10}, means the time interval of a measurement instrument's response after any step decrease to the input between the following points:

(1) The point at which the response has fallen 10% of the total amount it will fall in response to the step change.

(2) The point at which the response has fallen 90% of the total amount it will fall in response to the step change.

Flow-weighted mean means the mean of a quantity after it is weighted proportional to a corresponding flow rate. For example, if a gas concentration is measured continuously from the raw exhaust of an engine, its flow-weighted mean concentration is the sum of the products of each recorded concentration times its respective exhaust flow rate, divided by the sum of the recorded flow rates. As another example, the bag concentration from a CVS system is the same as the flow-weighted mean concentration, because the CVS system itself flow-weights the bag concentration.

Fuel type means a general category of fuels such as gasoline or LPG. There can be multiple grades within a single type

of fuel, such as all-season and winter-grade gasoline.

Good engineering judgment means judgments made consistent with generally accepted scientific and engineering principles and all available relevant information. See 40 CFR 1068.5 for the administrative process we use to evaluate good engineering judgment.

HEPA filter means high-efficiency particulate air filters that are rated to achieve a minimum initial particle-removal efficiency of 99.97% using ASTM F 1471–93 (incorporated by reference in § 1065.1010).

Hydraulic diameter means the diameter of a circle whose area is equal to the area of a noncircular cross section of tubing, including its wall thickness. The wall thickness is included only for the purpose of facilitating a simplified and nonintrusive measurement.

Hydrocarbon (HC) means THC, THCE, NMHC, or NMHCE, as applicable. Hydrocarbon generally means the hydrocarbon group on which the emission standards are based for each type of fuel and engine.

Identification number means a unique specification (for example, a model number/serial number combination) that allows someone to distinguish a particular engine from other similar engines.

Idle speed means the lowest engine speed with minimum load (greater than or equal to zero load), where an engine governor function controls engine speed. For engines without a governor function that controls idle speed, idle speed means the manufacturer-declared value for lowest engine speed possible with minimum load. Note that warm idle speed is the idle speed of a warmed-up engine.

Intermediate test speed has the meaning given in § 1065.610.

Linearity means the degree to which measured values agree with respective reference values. Linearity is quantified using a linear regression of pairs of measured values and reference values over a range of values expected or observed during testing. Perfect linearity would result in an intercept, a_0, equal to zero, a slope, a_1, of one, a coefficient of determination, r^2, of one, and a standard error of the estimate, SEE, of zero. The term ''linearity'' is not used in this part to refer to the shape of a measurement instrument's unprocessed response curve, such as a curve relating emission concentration to voltage output. A properly performing instrument with a nonlinear response curve will meet linearity specifications.

Manufacturer has the meaning given in section 216(1) of the Act. In general, this term includes any person who manufactures an engine or vehicle for sale in the United States or otherwise introduces a new nonroad engine into commerce in the United States. This includes importers who import engines or vehicles for resale.

Maximum test speed has the meaning given in § 1065.610.

Maximum test torque has the meaning given in § 1065.610.

NIST-traceable means relating to a standard value that can be related to NIST-stated references through an unbroken chain of comparisons, all having stated uncertainties, as specified in NIST Technical Note 1297 (incorporated by reference in § 1065.1010). Allowable uncertainty limits specified for NIST-traceability refer to the propagated uncertainty specified by NIST. You may ask to use other internationally recognized standards that are equivalent to NIST standards.

Noise means the precision of 30 seconds of updated recorded values from a measurement instrument as it quantifies a zero or reference value. Determine instrument noise, repeatability, and accuracy from the same data set. We specify a procedure for determining noise in § 1065.305.

Nonmethane hydrocarbons (NMHC) means the sum of all hydrocarbon species except methane. Refer to § 1065.660 for NMHC determination.

Nonmethane hydrocarbon equivalent (NMHCE) means the sum of the carbon mass contributions of non-oxygenated nonmethane hydrocarbons, alcohols and aldehydes, or other organic compounds that are measured separately as contained in a gas sample, expressed as exhaust nonmethane hydrocarbon from petroleum-fueled engines. The hydrogen-to-carbon ratio of the equivalent hydrocarbon is 1.85:1.

Nonroad means relating to nonroad engines.

Nonroad engine has the meaning we give in 40 CFR 1068.30. In general this means all internal-combustion engines except motor vehicle engines, stationary engines, engines used solely for competition, or engines used in aircraft.

Open crankcase emissions means any flow from an engine's crankcase that is emitted directly into the environment. Crankcase emissions are not ''open crankcase emissions'' if the engine is designed to always route all crankcase emissions back into the engine (for example, through the intake system or an aftertreatment system) such that all the crankcase emissions, or their products, are emitted into the environment only through the engine exhaust system.

Operator demand means an engine operator's input to control engine output. The ''operator'' may be a person (*i.e.*, manual), or a governor (*i.e.*, automatic) that mechanically or electronically signals an input that demands engine output. Input may be from an accelerator pedal or signal, a throttle-control lever or signal, a fuel lever or signal, a speed lever or signal, or a governor setpoint or signal. Output means engine power, P, which is the product of engine speed, f_n, and engine torque, T.

Oxides of nitrogen means compounds containing only nitrogen and oxygen as measured by the procedures specified in this part, except as specified in the standard-setting part. Oxides of nitrogen are expressed quantitatively as if the NO is in the form of NO_2, such that you use an effective molar mass for all oxides of nitrogen equivalent to that of NO_2.

Oxygenated fuels means fuels composed of oxygen-containing compounds, such as ethanol or methanol. Testing engines that use oxygenated fuels generally requires the use of the sampling methods in subpart I of this part. However, you should read the standard-setting part and subpart I of this part to determine appropriate sampling methods.

Partial pressure means the pressure, p, attributable to a single gas in a gas mixture. For an ideal gas, the partial pressure divided by the total pressure is equal to the constituent's molar concentration, x.

Percent (%) means a representation of exactly 0.01. Significant digits for the product of % and another value are defined as follows:

(1) Where we specify some percentage of a total value, the calculated value has the same number of significant digits as the total value. For example, 2% is exactly 0.02 and 2% of 101.3302 equals 2.026604.

(2) In other cases, determine the number of significant digits using the same method as you would use for determining the number of significant digits of a fractional value.

Portable emission measurement system (PEMS) means a measurement system consisting of portable equipment that can be used to generate brake-specific emission measurements during field testing or laboratory testing.

Precision means two times the standard deviation of a set of measured values of a single zero or reference quantity.

Procedures means all aspects of engine testing, including the equipment specifications, calibrations, calculations and other protocols and specifications

needed to measure emissions, unless we specify otherwise.

Proving ring is a device used to measure static force based on the linear relationship between stress and strain in an elastic material. It is typically a steel alloy ring, and you measure the deflection (strain) of its diameter when a static force (stress) is applied across its diameter.

PTFE means polytetrafluoroethylene, commonly known as Teflon™.

Ramped-modal means relating to a ramped-modal type of steady-state test, as described in the standard-setting part.

Regression statistics means any of the set of statistics specified in § 1065.602(i) through (l).

Repeatability means the precision of ten mean measurements of a reference quantity. Determine instrument repeatability, accuracy, and noise from the same data set. We specify a procedure for determining repeatability in § 1065.305.

Revoke has the meaning given in 40 CFR 1068.30.

Rise time, t_{10-90}, means the time interval of a measurement instrument's response after any step increase to the input between the following points:

(1) The point at which the response has risen 10% of the total amount it will rise in response to the step change.

(2) The point at which the response has risen 90% of the total amount it will rise in response to the step change.

Roughness (or average roughness, R_a*)* means the size of finely distributed vertical surface deviations from a smooth surface, as determined when traversing a surface. It is an integral of the absolute value of the roughness profile measured over an evaluation length.

Round means to round numbers according to NIST SP 811 (incorporated by reference in § 1065.1010), unless otherwise specified.

Scheduled maintenance means adjusting, repairing, removing, disassembling, cleaning, or replacing components or systems periodically to keep a part or system from failing, malfunctioning, or wearing prematurely. It also may mean actions you expect are necessary to correct an overt indication of failure or malfunction for which periodic maintenance is not appropriate.

Shared atmospheric pressure meter means an atmospheric pressure meter whose output is used as the atmospheric pressure for an entire test facility that has more than one dynamometer test cell.

Shared humidity measurement means a humidity measurement that is used as the humidity for an entire test facility that has more than one dynamometer test cell.

Span means to adjust an instrument so that it gives a proper response to a calibration standard that represents between 75% and 100% of the maximum value in the instrument range or expected range of use.

Spark-ignition means relating to a gasoline-fueled engine or any other type of engine with a spark plug (or other sparking device) and with operating characteristics significantly similar to the theoretical Otto combustion cycle. Spark-ignition engines usually use a throttle to regulate intake air flow to control power during normal operation.

Special procedures means procedures allowed under § 1065.10(c)(2).

Specified procedures means procedures we specify in this part 1065 or the standard-setting part. Other procedures allowed or required by § 1065.10(c) are not specified procedures.

Standard deviation has the meaning given in § 1065.602. Note this is the standard deviation for a non-biased sample.

Standard-setting part means the part in the Code of Federal Regulations that defines emission standards for a particular engine. See § 1065.1(a).

Steady-state means relating to emission tests in which engine speed and load are held at a finite set of nominally constant values. Steady-state tests are either discrete-mode tests or ramped-modal tests.

Stoichiometric means relating to the particular ratio of air and fuel such that if the fuel were fully oxidized, there would be no remaining fuel or oxygen. For example, stoichiometric combustion in a gasoline-fueled engine typically occurs at an air-to-fuel mass ratio of about 14.7:1.

Storage medium means a particulate filter, sample bag, or any other storage device used for batch sampling.

Test engine means an engine in a test sample.

Test interval means a duration of time over which you determine brake-specific emissions. For example, the standard-setting part may specify a complete laboratory duty cycle as a cold-start test interval, plus a hot-start test interval. As another example, a standard-setting part may specify a field-test interval, such as a ''not-to-exceed'' (NTE) event, as a duration of time over which an engine operates within a certain range of speed and torque. In cases where multiple test intervals occur over a duty cycle, the standard-setting part may specify additional calculations that weight and combine results to arrive at composite values for comparison against the applicable standards.

Test sample means the collection of engines selected from the population of an engine family for emission testing.

Tolerance means the interval in which 95% of a set of recorded values of a certain quantity must lie, with the remaining 5% of the recorded values deviating from the tolerance interval only due to measurement variability. Use the specified recording frequencies and time intervals to determine if a quantity is within the applicable tolerance. For parameters not subject to measurement variability, tolerance means an absolute allowable range.

Total hydrocarbon (THC) means the combined mass of organic compounds measured by the specified procedure for measuring total hydrocarbon, expressed as a hydrocarbon with a hydrogen-to-carbon mass ratio of 1.85:1.

Total hydrocarbon equivalent (THCE) means the sum of the carbon mass contributions of non-oxygenated hydrocarbons, alcohols and aldehydes, or other organic compounds that are measured separately as contained in a gas sample, expressed as exhaust hydrocarbon from petroleum-fueled engines. The hydrogen-to-carbon ratio of the equivalent hydrocarbon is 1.85:1.

United States means the States, the District of Columbia, the Commonwealth of Puerto Rico, the Commonwealth of the Northern Mariana Islands, Guam, American Samoa, and the U.S. Virgin Islands.

Useful life means the period during which a new engine is required to comply with all applicable emission standards. The standard-setting part defines the specific useful-life periods for individual engines.

Variable-speed engine means an engine that is not a constant-speed engine.

Vehicle means any vehicle, vessel, or type of equipment using engines to which this part applies. For purposes of this part, the term ''vehicle'' may include nonmotive machines or equipment such as a pump or generator.

Verification means to evaluate whether or not a measurement system's outputs agree with a range of applied reference signals to within one or more predetermined thresholds for acceptance. Contrast with ''calibration''.

We (us, our) means the Administrator of the Environmental Protection Agency and any authorized representatives.

Zero means to adjust an instrument so it gives a zero response to a zero calibration standard, such as purified nitrogen or purified air for measuring concentrations of emission constituents.

Zero gas means a gas that yields a zero response in an analyzer. This may either be purified nitrogen, purified air, a combination of purified air and purified nitrogen. For field testing, *zero gas* may include ambient air.

§ 1065.1005 Symbols, abbreviations, acronyms, and units of measure.

The procedures in this part generally follow the International System of Units (SI), as detailed in NIST Special Publication 811, 1995 Edition, ''Guide for the Use of the International System, of Units (SI),'' which we incorporate by reference in § 1065.1010. See § 1065.25 for specific provisions related to these conventions. This section summarizes the way we use symbols, units of measure, and other abbreviations.

(a) *Symbols for quantities.* This part uses the following symbols and units of measure for various quantities:

Symbol	Quantity	Unit	Unit symbol	Base SI units
%	percent	0.01	%	10^{-2}
α	atomic hydrogen to carbon ratio	mole per mole	mol/mol	1
A	area	square meter	m^2	m^2
a_0	intercept of least squares regression.			
a_1	slope of least squares regression.			
β	ratio of diameters	meter per meter	m/m	1
β	atomic oxygen to carbon ratio	mole per mole	mol/mol	1
$C^{\#}$	number of carbon atoms in a molecule.			
D	diameter	meter	m	m
DF	dilution air fraction	mole per mol	mol/mol	1
ε	error between a quantity and its reference.			
e	brake-specific basis	gram per kilowatt hour	g/(kW·h)	$g \cdot 3.6^{-1} \cdot 10^{6} \cdot m^{-2} \cdot kg \cdot s^{2}$
F	F-test statistic.			
f	frequency	hertz	Hz	s^{-1}
f_n	rotational frequency (shaft)	revolutions per minute	rev/min	$2 \cdot pi \cdot 60^{-1} \cdot s^{-1}$
γ	ratio of specific heats	(joule per kilogram kelvin) per (joule per kilogram kelvin).	(J/(kg·K))/(J/(kg·K))	1
K	correction factor			1
l	length	meter	m	m
μ	viscosity, dynamic	pascal second	Pa·s	$m^{-1} \cdot kg \cdot s^{-1}$
M	molar mass[1]	gram per mole	g/mol	$10^{-3} \cdot kg \cdot mol^{-1}$
m	mass	kilogram	kg	kg
$\dot{m}$	mass rate	kilogram per second	kg/s	$kg \cdot s^{-1}$
ν	viscosity, kinematic	meter squared per second	m^2/s	$m^2 \cdot s^{-1}$
N	total number in series.			
n	amount of substance	mole	mol	mol
$\dot{n}$	amount of substance rate	mole per second	mol/s	$mol \cdot s^{-1}$
P	power	kilowatt	kW	$10^3 \cdot m^2 \cdot kg \cdot s^{-3}$
PF	penetration fraction.			
p	pressure	pascal	Pa	$m^{-1} \cdot kg \cdot s^{-2}$
ρ	mass density	kilogram per cubic meter	kg/m^3	$kg \cdot m^{-3}$
r	ratio of pressures	pascal per pascal	Pa/Pa	1
r^2	coefficient of determination.			
R_a	average surface roughness	micrometer	µm	m^{-6}
$Re^{\#}$	Reynolds number.			
RF	response factor.			
σ	non-biased standard deviation.			
SEE	standard estimate of error.			
T	absolute temperature	kelvin	K	K
T	Celsius temperature	degree Celsius	°C	K − 273.15
T	torque (moment of force)	newton meter	N·m	$m^2 \cdot kg \cdot s^{-2}$
t	time	second	s	s
Δt	time interval, period, 1/frequency	second	s	s
V	volume	cubic meter	m^3	m^3
$\dot{V}$	volume rate	cubic meter per second	m^3/s	$m^3 \cdot s^{-1}$
W	work	kilowatt hour	kW·h	$3.6 \cdot 10^{-6} \cdot m^2 \cdot kg \cdot s^{-2}$
x	amount of substance mole fraction[2]	mole per mole	mol/mol	1
$\bar{X}$	flow-weighted mean concentration	mole per mole	mol/mol	1
y	generic variable.			

[1] See paragraph (f)(2) of this section for the values to use for molar masses. Note that in the cases of NO_X and HC, the regulations specify effective molar masses based on assumed speciation rather than actual speciation.

[2] Note that mole fractions for THC, THCE, NMHC, NMHCE, and NOTHC are expressed on a C_1 equivalent basis.

(b) *Symbols for chemical species.* This part uses the following symbols for chemical species and exhaust constituents:

Symbol	Species
Ar	argon.
C	carbon.
CH_4	methane.
C_2H_6	ethane.
C_3H_8	propane.
C_4H_{10}	butane
C_5H_{12}	pentane.
CO	carbon monoxide.
CO_2	carbon dioxide.
H	atomic hydrogen
H_2	molecular hydrogen.
H_2O	water.
He	helium.

Symbol	Species
^{85}Kr	krypton 85.
N_2	molecular nitrogen.
NMHC	nonmethane hydrocarbon.
NMHCE	nonmethane hydrocarbon equivalent.
NO	nitric oxide.
NO_2	nitrogen dioxide.
NO_X	oxides of nitrogen.
NOTHC	nonoxygenated hydrocarbon.
O_2	molecular oxygen.
OHC	oxygenated hydrocarbon.
^{210}Po	polonium 210.
PM	particulate mass.
S	sulfur.
THC	total hydrocarbon.
ZrO_2	zirconium dioxide.

(c) *Prefixes.* This part uses the following prefixes to define a quantity:

Symbol	Quantity	Value
μ	micro	10^{-6}
m	milli	10^{-3}
c	centi	10^{-2}
k	kilo	10^{3}
M	mega	10^{6}

(d) *Superscripts.* This part uses the following superscripts to define a quantity:

Superscript	Quantity
overbar (such as $\bar{y}$).	arithmetic mean.
overdot (such as $\bar{y}$).	quantity per unit time.

(e) *Subscripts.* This part uses the following subscripts to define a quantity:

Subscript	Quantity
abs	absolute quantity.
act	actual condition.
air	air, dry
atmos	atmospheric.
cal	calibration quantity.
CFV	critical flow venturi.
cor	corrected quantity.
dil	dilution air.
dexh	diluted exhaust.
exh	raw exhaust.
exp	expected quantity.
i	an individual of a series.
idle	condition at idle.
in	quantity in.
init	initial quantity, typically before an emission test.
j	an individual of a series.
max	the maximum (i.e., peak) value expected at the standard over a test interval; not the maximum of an instrument range.
meas	measured quantity.
out	quantity out.
part	partial quantity.
PDP	positive-displacement pump.
ref	reference quantity.
rev	revolution.
sat	saturated condition.
slip	PDP slip.
span	span quantity.
SSV	subsonic venturi.
std	standard condition.
test	test quantity.
uncor	uncorrected quantity.
zero	zero quantity.

(f) *Constants.* (1) This part uses the following constants for the composition of dry air:

Symbol	Quantity	Mol/mol
x_{Arair}	amount of argon in dry air.	0.00934
x_{CO2air}	amount of carbon dioxide in dry air.	0.000375
x_{N2air}	amount of nitrogen in dry air.	0.78084
x_{O2air}	amount of oxygen in dry air.	0.209445

(2) This part uses the following molar masses or effective molar masses of chemical species:

Symbol	Quantity	g/mol (10^{-3}·kg·mol^{-1})
M_{air}	molar mass of dry air [1].	28.96559
M_{Ar}	molar mass of argon.	39.948
M_C	molar mass of carbon.	12.0107
M_{CO}	molar mass of carbon monoxide.	28.0101
M_{CO2}	molar mass of carbon dioxide.	44.0095
M_H	molar mass of atomic hydrogen.	1.00794
M_{H2}	molar mass of molecular hydrogen.	2.01588
M_{H2O}	molar mass of water.	18.01528
M_{He}	molar mass of helium.	4.002602
M_N	molar mass of atomic nitrogen.	14.0067
M_{N2}	molar mass of molecular nitrogen.	28.0134
M_{NMHC}	effective molar mass of nonmethane hydrocarbon [2].	13.875389
M_{NMHCE}	effective molar mass of nonmethane equivalent hydrocarbon [2].	13.875389
M_{NOX}	effective molar mass of oxides of nitrogen [3].	46.0055
M_O	molar mass of atomic oxygen.	15.9994
M_{O2}	molar mass of molecular oxygen.	31.9988
M_{C3H8}	molar mass of propane.	44.09562
M_S	molar mass of sulfur.	32.065
M_{THC}	effective molar mass of total hydrocarbon [2].	13.875389
M_{THCE}	effective molar mass of total hydrocarbon equivalent [2].	13.875389

[1] See paragraph (f)(1) of this section for the composition of dry air.

[2] The effective molar masses of THC, THCE, NMHC, and NMHCE are defined by an atomic hydrogen-to-carbon ratio, α, of 1.85.

[3] The effective molar mass of NO_X is defined by the molar mass of nitrogen dioxide, NO_2.

(3) This part uses the following molar gas constant for ideal gases:

Symbol	Quantity	J/(mol) · K) $(10)^{-3}$ (m^2·kg·S^{-2} mol^{-1}· K^{-1}
R	molar gas constant	8.314472

(4) This part uses the following ratios of specific heats for dilution air and diluted exhaust:

Symbol	Quantity	[J/(kg·K)]/[J/(kg·K)]
γair	ratio of specific heats for intake air or dilution air.	1.399
γdil	ratio of specific heats for diluted exhaust.	1.399

Symbol	Quantity	[J/(kg·K)]/[J/(kg·K)]
γ_{exh}	ratio of specific heats for raw exhaust.	1.385

(g) *Other acronyms and abbreviations.* This part uses the following additional abbreviations and acronyms:

ASTM	American Society for Testing and Materials.
BMD ...	bag mini-diluter.
BSFC ..	brake-specific fuel consumption.
CARB	California Air Resources Board.
CFR	Code of Federal Regulations.
CFV	critical-flow venturi.
CI	compression-ignition.
CLD	chemiluminescent detector.
CVS	constant-volume sampler.
DF	deterioration factor.
ECM ...	electronic control module.
EFC	electronic flow control.
EGR ...	exhaust gas recirculation.
EPA	Environmental Protection Agency.
FID	flame-ionization detector.
IBP	initial boiling point.
ISO	International Organization for Standardization.
LPG	liquefied petroleum gas.
NDIR ..	nondispersive infrared.
NDUV	nondispersive ultraviolet.
NIST ...	National Institute for Standards and Technology.
PDP	positive-displacement pump.
PEMS	portable emission measurement system.
PFD	partial-flow dilution.
PMP ...	Polymethylpentene.
pt.	a single point at the mean value expected at the standard.
PTFE ..	polytetrafluoroethylene (commonly known as Teflon™).
RE	rounding error.
RMC ...	ramped-modal cycle.
RMS ...	root-mean square.
RTD	resistive temperature detector.
SSV	subsonic venturi.
SI	spark-ignition.
UCL	upper confidence limit.
UFM ...	ultrasonic flow meter.
U.S.C.	United States Code.

§ 1065.1010 Reference materials.

Documents listed in this section have been incorporated by reference into this part. The Director of the Federal Register approved the incorporation by reference as prescribed in 5 U.S.C. 552(a) and 1 CFR part 51. Anyone may inspect copies at the U.S. EPA, Air and Radiation Docket and Information Center, 1301 Constitution Ave., NW., Room B102, EPA West Building, Washington, DC 20460 or at the National Archives and Records Administration (NARA). For information on the availability of this material at NARA, call 202–741–6030, or go to: *http://www.archives.gov/federal_register/code_of_federal_regulations/ibr_locations.html.*

(a) *ASTM material.* Table 1 of this section lists material from the American Society for Testing and Materials that we have incorporated by reference. The first column lists the number and name of the material. The second column lists the sections of this part where we reference it. Anyone may purchase copies of these materials from the American Society for Testing and Materials, 100 Barr Harbor Dr., P.O. Box C700, West Conshohocken, PA 19428 or *www.astm.com.* Table 1 follows:

TABLE 1 OF § 1065.1010.—ASTM MATERIALS

Document number and name	Part 1065 reference
ASTM D 86–04b, Standard Test Method for Distillation of Petroleum Products at Atmospheric Pressure	1065.703, 1065.710
ASTM D 93–02a, Standard Test Methods for Flash Point by Pensky-Martens Closed Cup Tester	1065.703
ASTM D 287 92 (Reapproved 2000), Standard Test Method for API Gravity of Crude Petroleum and Petroleum Products (Hydrometer Method)	1065.703
ASTM D 323–99a, Standard Test Method for Vapor Pressure of Petroleum Products (Reid Method)	1065.710
ASTM D 445–04, Standard Test Method for Kinematic Viscosity of Transparent and Opaque Liquids (and the Calculation of Dynamic Viscosity)	1065.703
ASTM D 613–03b, Standard Test Method for Cetane Number of Diesel Fuel Oil	1065.703
ASTM D 910–04a, Standard Specification for Aviation Gasolines	1065.701
ASTM D 975–04c, Standard Specification for Diesel Fuel Oils	1065.701
ASTM D 1266–98 (Reapproved 2003), Standard Test Method for Sulfur in Petroleum Products (Lamp Method)	1065.710
ASTM D 1267–02, Standard Test Method for Gage Vapor Pressure of Liquefied Petroleum (LP) Gases (LP-Gas Method)	1065.720
ASTM D 1319–03, Standard Test Method for Hydrocarbon Types in Liquid Petroleum Products by Fluorescent Indicator Adsorption	1065.710
ASTM D 1655–04a, Standard Specification for Aviation Turbine Fuels	1065.701
ASTM D 1837–02a, Standard Test Method for Volatility of Liquefied Petroleum (LP) Gases	1065.720
ASTM D 1838–03, Standard Test Method for Copper Strip Corrosion by Liquefied Petroleum (LP) Gases	1065.720
ASTM D 1945–03, Standard Test Method for Analysis of Natural Gas by Gas Chromatography	1065.715
ASTM D 2158–04, Standard Test Method for Residues in Liquefied Petroleum (LP) Gases	1065.720
ASTM D 2163–91 (Reapproved 1996), Standard Test Method for Analysis of Liquefied Petroleum (LP) Gases and Propene Concentrates by Gas Chromatography	1065.720
ASTM D 2598–02, Standard Practice for Calculation of Certain Physical Properties of Liquefied Petroleum (LP) Gases from Compositional Analysis	1065.720
ASTM D 2622–03, Standard Test Method for Sulfur in Petroleum Products by Wavelength Dispersive X-ray Fluorescence Spectrometry	1065.703
ASTM D 2713–91 (Reapproved 2001), Standard Test Method for Dryness of Propane (Valve Freeze Method)	1065.720
ASTM D 2784–98 (Reapproved 2003), Standard Test Method for Sulfur in Liquefied Petroleum Gases (Oxy-Hydrogen Burner or Lamp)	1065.720
ASTM D 2880–03, Standard Specification for Gas Turbine Fuel Oils	1065.701
ASTM D 2986–95a (Reapproved 1999), Standard Practice for Evaluation of Air Assay Media by the Monodisperse DOP (Dioctyl Phthalate) Smoke Test	1065.170
ASTM D 3231–02, Standard Test Method for Phosphorus in Gasoline	1065.710
ASTM D 3237–02, Standard Test Method for Lead in Gasoline By Atomic Absorption Spectroscopy	1065.710
ASTM D 4814–04b, Standard Specification for Automotive Spark-Ignition Engine Fuel	1065.701
ASTM D 5186–03, Standard Test Method for Determination of the Aromatic Content and Polynuclear Aromatic Content of Diesel Fuels and Aviation Turbine Fuels By Supercritical Fluid Chromatography	1065.703
ASTM D 5797–96 (Reapproved 2001), Standard Specification for Fuel Methanol (M70–M85) for Automotive Spark-Ignition Engines	1065.701

TABLE 1 OF § 1065.1010.—ASTM MATERIALS—Continued

Document number and name	Part 1065 reference
ASTM D 5798–99 (Reapproved 2004), Standard Specification for Fuel Ethanol (Ed75–Ed85) for Automotive Spark-Ignition Engines	1065.701
ASTM D 6615–04a, Standard Specification for Jet B Wide-Cut Aviation Turbine Fuel	1065.701
ASTM D 6751–03a, Standard Specification for Biodiesel Fuel Blend Stock (B100) for Middle Distillate Fuels	1065.701
ASTM D 6985–04a, Standard Specification for Middle Distillate Fuel Oil Military Marine Applications	1065.701
ASTM F 1471–93 (Reapproved 2001), Standard Test Method for Air Cleaning Performance of a High-Efficiency Particulate Air Filter System	1065.1001

(b) *ISO material.* Table 2 of this section lists material from the International Organization for Standardization that we have incorporated by reference. The first column lists the number and name of the material. The second column lists the section of this part where we reference it. Anyone may purchase copies of these materials from the International Organization for Standardization, Case Postale 56, CH–1211 Geneva 20, Switzerland or *www.iso.org.* Table 2 follows:

TABLE 2 OF § 1065.1010.—ISO MATERIALS

Document number and name	Part 1065 reference
ISO 14644–1, Cleanrooms and associated controlled environments	1065.190

(c) *NIST material.* Table 3 of this section lists material from the National Institute of Standards and Technology that we have incorporated by reference. The first column lists the number and name of the material. The second column lists the section of this part where we reference it. Anyone may purchase copies of these materials from the Government Printing Office, Washington, DC 20402 or download them free from the Internet at *www.nist.gov.* Table 3 follows:

TABLE 3 OF § 1065.1010. NIST MATERIALS

Document number and name	Part 1065 reference
NIST Special Publication 811, 1995 Edition, Guide for the Use of the International System of Units (SI), Barry N. Taylor, Physics Laboratory	1065.20, 1065.1001, 1065.1005
NIST Technical Note 1297, 1994 Edition, Guidelines for Evaluating and Expressing the Uncertainty of NIST Measurement Results, Barry N. Taylor and Chris E. Kuyatt	1065.1001

(d) *SAE material.* Table 4 of this section lists material from the Society of Automotive Engineering that we have incorporated by reference. The first column lists the number and name of the material. The second column lists the sections of this part where we reference it. Anyone may purchase copies of these materials from the Society of Automotive Engineers, 400 Commonwealth Drive, Warrendale, PA 15096 or *www.sae.org.* Table 4 follows:

TABLE 4 OF § 1065.1010. SAE MATERIALS

Document number and name	Part 1065 reference
"Optimization of Flame Ionization Detector for Determination of Hydrocarbon in Diluted Automotive Exhausts," Reschke Glen D., SAE 770141	1065.360
"Relationships Between Instantaneous and Measured Emissions in Heavy Duty Applications," Ganesan B. and Clark N. N., West Virginia University, SAE 2001–01–3536	1065.309

(e) *California Air Resources Board material.* Table 5 of this section lists material from the California Air Resources Board that we have incorporated by reference. The first column lists the number and name of the material. The second column lists the sections of this part where we reference it. Anyone may get copies of these materials from the California Air Resources Board 9528 Telstar Ave., El Monte, California 91731. Table 5 follows:

TABLE 5 OF § 1065.1010. CALIFORNIA AIR RESOURCES BOARD MATERIALS

Document number and name	Part 1065 reference
"California Non-Methane Organic Gas Test Procedures," Amended July 30, 2002, Mobile Source Division, California Air Resources Board	1065.805

[FR Doc. 05–11534 Filed 7–12–05; 8:45 am]

BILLING CODE 6560–50–U

Federal Register

Wednesday,
July 13, 2005

Part III

Securities and Exchange Commission

17 CFR Part 240

Amendments to the Penny Stock Rules; Final Rule

SECURITIES AND EXCHANGE COMMISSION

17 CFR Part 240

[Release No. 34–51983; File No. S7–02–04]

RIN 3235–AI02

Amendments to the Penny Stock Rules

AGENCY: Securities and Exchange Commission.

ACTION: Final rule.

SUMMARY: The Securities and Exchange Commission is amending the definition of ''penny stock'' as well as the requirements for providing certain information to penny stock customers. These amendments are designed to address market changes, evolving communications technology and legislative developments.

EFFECTIVE DATES: Effective September 12, 2005.

FOR FURTHER INFORMATION CONTACT: Catherine McGuire, Chief Counsel, Paula R. Jenson, Deputy Chief Counsel, Brian A. Bussey, Assistant Chief Counsel, or Norman M. Reed, Special Counsel, at 202/551–5550, Office of Chief Counsel, Division of Market Regulation, Securities and Exchange Commission, Station Place, 100 F Street, NE., Washington, DC 20549.

SUPPLEMENTARY INFORMATION: The Securities and Exchange Commission (''Commission'' or ''SEC'') is adopting amendments to Rule 3a51–1 [17 CFR 240.3a51–1], Rule 15g–2 [17 CFR 240.15g–2], Rule 15g–9 [17 CFR 240.15g–9], and Rule 15g–100 [17 CFR 240.15g–100] under the Securities Exchange Act of 1934 (''Exchange Act'').

Table of Contents

I. Executive Summary
II. Amendments to Rule 3a51–1: Definition of Penny Stock
III. Amendments to Rules 15g–2 and 15g–9
IV. Amendments to Schedule 15G
V. Other Comments
VI. Paperwork Reduction Act Analysis
VII. Costs and Benefits of Rule Amendments
VIII. Consideration of Burden on Promotion of Efficiency, Competition, and Capital Formation
IX. Final Regulatory Flexibility Analysis
X. Statutory Authority
Text of Rule Amendments

I. Executive Summary

In January 2004, the Commission proposed amendments to rules under the Exchange Act defining the term ''penny stock'' and requiring certain broker-dealers to provide certain information to customers regarding penny stock transactions.[1] These proposed amendments were designed to respond to changing market structures, new technology, and legislative developments.

In proposing these amendments, the Commission was particularly concerned with their potential effect on small business capital formation. We recognized the important contributions small companies make to the economy, and stressed that the rule amendments were not intended to impede the access of small businesses to the capital markets or eliminate viable secondary markets for their securities.[2]

The Commission received a total of 11 comment letters. Commenters included investors, employees of broker-dealers, an attorney, a law school group, the American Stock Exchange LLC (''Amex''), the National Futures Association (''NFA''), and The Nasdaq Stock Market, Inc. (''Nasdaq'').[3] While many commenters generally supported the Commission's proposals, some expressed concerns regarding particular provisions. We discuss specific comments below in connection with the discussion of the rule amendments.

After carefully considering the comments, the Commission is adopting the rule amendments as proposed with a technical modification to correct a typographical error in the proposal. In particular, we are amending Exchange Act Rule 3a51–1 to provide that securities relying on the exclusions from the definition of penny stock for reported securities, as defined in Exchange Act Rule 11Aa3–1(a), and for certain other exchange-registered securities must either be listed on a ''grandfathered'' national securities exchange[4] or be listed on a national securities exchange or an automated quotation system sponsored by a registered national securities association (including Nasdaq) that satisfies certain minimum quantitative listing standards.

In addition, the Commission is amending Rule 3a51–1 to exclude security futures products from the definition of penny stock. We are also eliminating an outdated exclusion for securities quoted on Nasdaq, as well as an outdated provision relating to Amex's Emerging Company Marketplace.[5]

The Commission is also amending Exchange Act Rules 15g–2 and 15g–9 to provide an explicit ''cooling-off period'' to replace the implicit period that customers traditionally have had when the disclosure documents required by the penny stock rules are provided by postal mail rather than electronically. Moreover, we are amending the penny stock disclosure document (as defined below) and the instructions to it set forth in Schedule 15G under the Exchange Act[6] to update and streamline the document and to make it more useful and easily readable.

Taken as a whole, these amendments are intended to ensure that investors continue to receive the protections of the penny stock rules, regardless of changing technology or market structures.

II. Amendments to Rule 3a51–1: Definition of Penny Stock

Exchange Act Rule 3a51–1 generally defines a penny stock as any equity security. The definition, however, contains a number of broad exclusions for certain equity securities.

A. Reported Securities and Other Exchange-Registered Securities—Minimum Listing Standards

We proposed to amend paragraph (a) of Rule 3a51–1,[7] which provides an exclusion for reported securities, to require that reported securities must satisfy one of the following standards in order to be excluded from the definition of penny stock. First, a reported security registered on a national securities exchange would qualify for the exclusion if the national securities exchange on which it is registered has been continuously registered since April 20, 1992,[8] and the national securities exchange has maintained quantitative initial and continued listing standards that are substantially similar to or stricter than the listing standards that were in place at that exchange on January 8, 2004.[9] Second, a reported security registered on a national securities exchange would qualify for this exclusion if the national securities exchange or a ''junior tier'' of the

[1] Exchange Act Rel. No. 49037 (Jan. 8, 2004), 69 FR 2531 (Jan. 16, 2004).

[2] *See id.* at 2532.

[3] A detailed comment summary has been prepared by the staff and placed in the Commission's public files, together with all comment letters received. *See* File S7–02–04.

[4] An exchange will be ''grandfathered'' if it has been continuously registered since the Commission initially adopted Rules 15g–1 through 15g–9 under the Exchange Act (collectively known as the ''penny stock rules'') and if the exchange has maintained and continues to maintain quantitative listing standards substantially similar to those in place on January 8, 2004.

[5] *See* 17 CFR 240.3a51–1(a).

[6] 17 CFR 240.15g–100.

[7] 17 CFR 240.3a51–1(a).

[8] This is the date on which the Commission adopted Rule 3a51–1.

[9] We refer to this provision as the ''grandfather'' provision. *See* Exchange Act Rel. No. 49037, 69 FR at 2534 n. 28 (discussing the use of the term ''substantially similar'' in this context).

exchange has established initial listing standards that meet or exceed the criteria set forth below, and maintains quantitative continued listing standards that are both reasonably related to its initial listing standards and consistent with the maintenance of fair and orderly markets. Third, a reported security listed on an automated quotation system sponsored by a registered national securities association [10] would qualify for this exclusion if the registered national securities association has established initial listing standards for the automated quotation system that meet or exceed the criteria set forth below, and maintains quantitative continued listing standards that are both reasonably related to its initial listing standards and consistent with the maintenance of fair and orderly markets.[11]

In particular, to qualify for this exclusion for reported securities or the exclusion for certain other exchange-registered securities, a national securities exchange (other than a ''grandfathered'' exchange) or an automated quotation system sponsored by a registered national securities association on which the security is registered or listed must have initial listing standards that meet or exceed the following criteria:

An issuer must have (1) stockholders' equity of $5 million, a market value of listed securities of $50 million for 90 consecutive days prior to applying for the listing,[12] or net income of $750,000 (excluding extraordinary or non-recurring items) in the most recently completed fiscal year or two of the last three most recently completed fiscal years; and (2) an operating history of at least one year or a market value of listed securities of $50 million. In addition, for common or preferred stock, the listing standards must require a minimum bid price of $4 per share.

For common stock, the initial listing standards must also require at least 300 round lot holders,[13] and at least 1 million publicly held shares with a market value of at least $5 million.[14] In the case of convertible debt securities, the initial listing standards need to require a principal amount outstanding of at least $10 million. With respect to rights and warrants, the initial listing standards also must require that at least 100,000 rights and warrants be issued and that the underlying security be registered on a national securities exchange or listed on an automated quotation system sponsored by a registered national securities association, and satisfy the requirements of paragraphs (a) or (e) of Rule 3a51–1.

For put warrants (that is, instruments that grant the holder the right to sell to the issuing company a specified number of shares of the company's common stock, at a specified price on or before a specified date), the initial listing standards must require that at least 100,000 put warrants be issued and that the underlying security be registered on a national securities exchange or listed on an automated quotation system sponsored by a registered national securities association, and satisfy the requirements of paragraph (a) or (e) of Rule 3a51–1.

With regard to units (that is, two or more securities traded together), the initial listing standards must require that all component parts be registered on a national securities exchange or listed on an automated quotation system sponsored by a registered national securities association, and satisfy the requirements of paragraph (a) or (e) of Rule 3a51–1. Finally, for all other equity securities (including hybrid securities and derivative securities products), the national securities exchange or national securities association must have quantitative initial listing standards that are substantially similar to those outlined above.[15]

Two markets commented on these proposed amendments regarding the exclusion for reported securities. Nasdaq expressed the view that the proposed amendments would undermine the ability of small companies to access capital markets or list their securities on viable secondary markets because they would encourage regulatory arbitrage.[16] Specifically, this commenter explained that by essentially adopting the SmallCap Market listing standards as of January 8, 2004 as the baseline criterion for an exemption from the definition of penny stock, and by grandfathering national securities exchanges registered since April 20, 1992, the Commission would create ''the opportunity for an issuer to choose a listing venue with laxer standards to secure an exemption from the penny stock rules rather than choosing the venue that provides a more transparent, more liquid and better regulated market for investors.'' [17] Nasdaq also expressed concern that these proposals ''could impede the ability of established markets to deal with sudden economic and geopolitical events.'' [18] In Nasdaq's view, the proposed amendments to Rule 3a51–1 would mean that some markets would have ''a built in advantage memorialized in Commission regulation.'' [19] In addition, Nasdaq asserted that an ''attempt to freeze listing standards'' seems ''contrary to the reality that change is an integral component of market evolution.'' [20] It also indicated that the Commission was ''laboring under the false assumption that the [listing] standards of all markets are substantially the same,'' and contrasted its initial listing standards with those of the Amex.[21] Nasdaq suggested amending the proposal to apply ''truly uniform standards'' across all affected markets and exchanges.[22] In Nasdaq's view, the current overall regulatory structure encourages flexibility while ensuring that the Commission's absolute oversight of listing standards to avoid potential penny stock abuses in listed securities.[23] Finally, Nasdaq asserted that the current system meets the needs of investors better than a rigid, time-based freeze on listing standards,[24] and asked the Commission to ''recognize the value of a flexible model to investors'' in the final rules.[25]

In contrast, the Amex was supportive of these proposed rule amendments.[26]

[10] *Id.* at n. 29 (discussing the term ''automated quotation system'' in this context).

[11] *Id.* at n. 30. The securities now listed on Nasdaq do not need a ''grandfather'' provision because the quantitative listing standards we are adopting are modeled on those currently used by the Nasdaq SmallCap Market.

[12] Market value means the closing bid price multiplied by the number of securities listed.

[13] A round lot holder means a holder of a normal unit of trading.

[14] Shares held directly or indirectly by an officer or director of the issuer and by any person who is the beneficial owner of more than 10 percent of the total shares outstanding are not considered to be publicly held for purposes of calculating market value in this context.

[15] *See* Exchange Act Rel. No. 49037, 69 FR at 2534 n. 37. These criteria are modeled on the quantitative criteria currently required by Nasdaq for inclusion in its SmallCap Market.

[16] *See* letter from Edward Knight, Executive Vice President, Nasdaq, to Jonathan G. Katz, Secretary, SEC (Mar. 18, 2004) (''Nasdaq letter''). Nasdaq's comments are discussed in detail below.

[17] *Id.*

[18] *Id.*

[19] *Id.*

[20] *Id.*

[21] *Id.* (''For instance, NASDAQ notes that the American Stock Exchange's (''Amex'') initial listing standard for price is $3.00 per share, whereas the NASDAQ SmallCap Market standard is $4.00 per share. Thus, [Nasdaq observes that,] in certain material respects, the SmallCap Market initial listing standards are more stringent than the initial listing standards of the Amex, which would be grandfathered by the proposed definition of a 'penny stock.' '' (citations omitted)).

[22] *Id.*

[23] *Id.*

[24] *Id.*

[25] *Id.* Nasdaq recognized, however, that the Commission could address this concern by granting waivers and exemptions on a case-by-case basis.

[26] *See* letter from Michael J. Ryan Jr., Executive Vice President and General Counsel, Amex, to Jonathan G. Katz, Secretary, SEC (May 7, 2004)

Continued

Responding to Nasdaq's comments, the Amex stated that its initial listing standards are, in a number of ways, significantly more stringent than the Nasdaq SmallCap initial listing standards.[27] The Amex also disagreed with Nasdaq's assertion that the proposed amendments would lead to regulatory arbitrage.[28]

The Pace Investor Rights Project, a law school group at Pace University School of Law, also generally supported the proposed amendments, stating, ''We applaud the Commission's effort to provide an additional level of protection to penny stock investors by amending Rule 3a51–1 to add minimum quantitative standards for exclusion from the definition of a penny stock.'' [29] This commenter specifically noted that ''the proposed balance sheet or income statement criteria specified in [the proposed amendments to Rule] 3a51–1(a) should help distinguish excluded securities from those securities appropriately falling within the penny stock rules,'' and stated that ''initial listing and continued listing standards will enhance investor protection.'' [30] This commenter also suggested that ''improved protections might flow to general investors who make unsolicited transactions and rely to some degree on whether a security is properly classified as a penny stock or not.'' [31]

We have carefully considered the comments, and particularly Nasdaq's suggestion that the proposed rule amendments may foster regulatory arbitrage. We continue to believe that the rule amendments preserve—not change—the status quo with respect to existing markets. The amendments should not encourage or facilitate regulatory arbitrage because they explicitly provide for the ''grandfathering'' of reported securities on existing national securities exchanges. Moreover, the amendments implicitly ''grandfather'' Nasdaq because the minimum baseline for listing standards we are adopting today is modeled on the quantitative standards currently used by the Nasdaq SmallCap Market. As a result, the rule amendments should have no impact on the competitive positions of existing markets as compared to the current rule. In effect, only new markets or new ''junior tiers'' of existing national securities exchanges will be required to satisfy the minimum baseline for listing standards described above.

While we appreciate Nasdaq's preference for the current regulatory structure, and its view that national securities exchanges and automated quotation systems operated by national securities associations should have flexibility with respect to their listing standards, we do not view these amendments as fostering inflexibility, or as altering the current regulatory structure. National securities exchanges and Nasdaq will retain their ability to establish and change their listing standards. Moreover, as with other self-regulatory organization (''SRO'') rules, we will review any proposed changes to SRO listing standards for compliance with the requirements of the Exchange Act [32] and Rule 19b–4 thereunder.[33] Any proposed changes that would tighten a market's listing standards would have no effect on the penny stock status of securities listed on that market. We will also review any proposed changes that would dilute a market's listing standards and consider, among other things, whether such proposed rule changes might encourage any potential penny stock-type abuses in reported securities. In addition, in the event that an exchange or Nasdaq decided to lower any particular listing standards below the standards established in this rule,[34] it could request an exemption from the Commission pursuant to Exchange Act Rule 15g–1.[35]

Similarly, we can utilize exemptive authority to deal with sudden economic and geopolitical events, as we did in the days immediately following the market disruptions caused by the events of September 11, 2001. At that time, we issued emergency orders under Section 12(k)(2) of the Exchange Act.[36]

While we have considered the suggestion that we adopt a rule requiring ''truly'' uniform standards across all markets and exchanges, we believe that such an approach is inappropriate because it would require the Commission, as opposed to the markets, to establish listing standards. Such an approach would eliminate the flexibility SROs have to establish listing standards and undermine competition among markets on the basis of listing standards. In addition, the rule amendments we are now adopting permit Nasdaq and the ''grandfathered'' national securities exchanges to continue to operate as they currently do. Forcing all national securities exchanges

(''Amex letter'') (''The Amex fully supports the Commission's continuing efforts to deter fraud in the penny stock market.'').

[27] *Id.* (''While SmallCap imposes a higher price requirement, a full comparison of the initial listing standards for both marketplaces reveals that the Amex standards in the aggregate subject issuers to a broader range of quantitative criteria. Specifically, the Amex standards require compliance with at least two core quantitative criteria (*e.g.*, shareholders' equity, pre-tax income, market capitalization, market value of publicly held shares) and/or with enhanced quantitative criteria, while the SmallCap standards require compliance with only one core quantitative criteria.'').

[28] *Id.* (''As discussed above, the Nasdaq claim that the SmallCap listing standards are more stringent than the Amex listing standards is flawed, and accordingly we do not agree that the proposal would result in a regulatory arbitrage or encourage issuers to choose an Amex listing.'').

[29] *See* letter from Barbara Black, Director, Jill I. Gross, Director, and Bob Kim, Student Intern, Pace Investor Rights Project, to Jonathan G. Katz, Secretary, SEC (Mar. 11, 2004) (''Pace letter'').

[30] *Id.* As we noted when we proposed these amendments, requiring national securities exchanges (other than ''grandfathered'' exchanges) and registered national securities associations to adopt continued listing standards that are reasonably related to the proposed initial listing standards will help to ensure the stability of their respective markets, as well as protect investors, by enabling the exchanges and the registered national securities associations to identify listed companies that may not have sufficient liquidity and financial resources to warrant continued listing. *See* Exchange Act Rel. No. 49037, 69 FR at 2535.

We wish to stress that because listed companies are on-going businesses that are subject to changing markets and changing economic circumstances, we recognize that the continued listing standards will not be identical to the initial listing standards. Nevertheless, to meet the proposed requirement that they be reasonably related to the initial listing standards, the continued listing standards should be similar enough to the initial listing standards so that the continued listing standards have sufficient substance and meaning to uphold the quality of particular markets.

[31] *Id.* In addition, this commenter expressed concern that the proposed amendments to Rule 3a51–1 may not be sufficient to protect first time penny stock investors participating in solicited transactions.

[32] *See* 15 U.S.C. 78s(b).

[33] 17 CFR 240.19b–4.

[34] To the extent its current listing standards exceed those in Rule 3a51–1, Nasdaq or an exchange could lower its listing standards without necessarily losing its reported securities' exclusion from the definition of penny stock.

[35] 17 CFR 15g–1(f) (The Commission may exempt from Rules 15g–2 through 15g–6 ''[a]ny other transaction or class of transactions or persons or class of persons * * * as consistent with the public interest, and the protection of investors''). Paragraph (c)(1) of Rule 15g–9 excludes transactions covered by Rule 15g–1(f) (''For purposes of this section, the following transactions shall be exempt: (1) Transactions that are exempt under 17 CFR 240.15g–1(a), (b), (d), (e), and (f).'').

Moreover, Section 36 of the Exchange Act [15 U.S.C. 78mm] grants the Commission general exemptive authority to the extent that such exemptions are necessary or appropriate in the public interest, and are consistent with the protection of investors.

[36] Section 12(k)(2) of the Exchange Act [15 U.S.C. 78*l*(k)(2)] states that, when certain conditions are met, ''[t]he Commission, in an emergency, may by order summarily take such action to alter, supplement, suspend, or impose requirements or restrictions, with respect to any matter or action subject to regulation by the Commission or a self-regulatory organization under [the Exchange Act], as the Commission determines is necessary in the public interest and for the protection of investors * * *'' *See, e.g.*, Exchange Act Rel. Nos. 44791 (Sept. 14, 2001), 66 FR 48494 (Sept. 20, 2001); and 44827 (Sept. 21, 2001), 66 FR 49438 (Sept. 27, 2001) (temporarily easing the conditions of Exchange Act Rule 10b–18, the safe harbor for issuer repurchases).

and Nasdaq to adopt uniform listing standards—standards formulated by the Commission and untested in the real world—would be disruptive to established markets and impose unnecessary costs. Hence, we decline to adopt this suggestion.

We find that the proposed amendments to Rule 3a51–1(a) are consistent with the public interest and the protection of investors, and are adopting them with a technical modification to correct a typographical error in the proposal. As adopted, therefore, Rule 3a51–1(a)(2)(i)(H) will provide that the security underlying the put warrants must be ''registered on a national securities exchange or listed on an automated quotation system sponsored by a registered national securities association and satisfy the requirements of paragraph (a) or (e) of this section.''

These amendments will create a more meaningful distinction between securities that should be subject to the penny stock rules and those of more substantially capitalized issuers. They will therefore help ensure that we can continue to carry out Congress's stated goals with respect to penny stocks, as set forth in the Securities Enforcement Remedies and Penny Stock Reform Act of 1990 (''Penny Stock Reform Act''), regardless of changes in markets or market structures.[37]

B. Elimination of the Exclusion for Nasdaq Securities

We also proposed eliminating the exclusion in paragraph (f) of Rule 3a51–1 for certain securities quoted or authorized for quotation on Nasdaq upon notice of issuance because we believe it no longer serves any purpose.[38] We requested comment on this proposal.[39]

One commenter agreed with the proposed elimination of paragraph (f) of Rule 3a51–1 on the grounds that SmallCap Market securities are now reported securities within the meaning of paragraph (a) of Rule 3a51–1.[40] Another commenter noted that it had no objection to this change.[41] We find that the proposed amendment to Rule 3a51–1(f) is consistent with the public interest and the protection of investors, and are, therefore, adopting it without modification.

C. New Exclusion for Security Futures Products

We proposed amending Rule 3a51–1 to add new paragraph (f), which would exclude from the definition of penny stock security futures products listed on a national securities exchange or an automated quotation system sponsored by a registered national securities association.[42] This approach is consistent with the treatment of options under the penny stock rules.[43]

Two commenters addressed this proposed amendment. The NFA agreed with the Commission's analysis, and supported this proposed amendment.[44] In addition, the Pace Investor Rights Project indicated that it had no objection to this proposed amendment.[45] We find that this proposed amendment to Rule 3a51–1 is consistent with the public interest and the protection of investors, and are, therefore, adopting it without modification.

D. Other Amendments to Rule 3a51–1

We also proposed eliminating the exception in paragraph (a) of Rule 3a51–1 for Amex's Emerging Company Marketplace[46] because it no longer exists.[47] We received no comment regarding this proposed amendment. We find that this proposed amendment is consistent with the public interest and the protection of investors, and are, therefore, adopting it without modification.

In addition, we proposed amending the exclusion for certain other exchange-registered securities provided by paragraph (e) of Rule 3a51–1[48] to require that these securities satisfy, in addition to the existing requirements of paragraph (e), one of the standards described above applicable to reported securities that are exchange-registered in order to be excluded from the definition of penny stock.[49] We also proposed amending the exception in paragraph (e) of Rule 3a51–1[50] to make clear that a security that satisfies the requirements of paragraph (e) and also satisfies the requirements of paragraph (a), (b), (c), (d), (f) or (g) of Rule 3a51–1 is not a penny stock for purposes of Section 15(b)(6) of the Exchange Act.[51]

[37] *See* Pub. L. No. 101–429, 104 Stat. 931 (1990); Exchange Act Rel. No. 30608 (Apr. 20, 1992), 57 FR 18004 (Apr. 28, 1992). Among other things, Congress found when it enacted the Penny Stock Reform Act that:

''* * * (2) Protecting investors in new securities is a critical component in the maintenance of an honest and healthy market for such securities.

(3) Protecting issuers of new securities and promoting the capital formation process on behalf of small companies are fundamental concerns in maintaining a strong economy and viable trading markets.''

Penny Stock Reform Act, Sec. 502 [15 U.S.C. 78o note].

[38] *See* Exchange Act Rel. No. 49037, 69 FR at 2536 (recognizing that since 2001 SmallCap Market securities have been reported securities because they are securities reported pursuant to a transaction reporting plan approved by the Commission).

[39] *Id.*

[40] *See* letter from Donald J. Stoecklein, Stoecklein Law Group, to Jonathan G. Katz, Secretary, SEC (Mar. 15, 2004) (''Stoecklein letter'').

[41] *See* Pace letter, *supra* at n. 29.

[42] *See* Exchange Act Rel. No. 49037, 69 FR at 2536. Security futures products are subject to a special disclosure regime. In particular, broker-dealers must provide their customers with a risk disclosure document before effecting transactions in security futures products for their customers. *See* Exchange Act Rel. No. 46862 (Nov. 20, 2002), 67 FR 70993 (Nov. 27, 2002); Exchange Act Rel. No. 46614 (Oct. 7, 2002), 67 FR 64162 (Oct. 17, 2002). *See also* NASD Rule 2865(b)(1) and NFA Compliance Rule 2–30(b). Subjecting security futures products to the additional disclosure requirements of the penny stock rules, therefore, would likely be duplicative and unnecessarily burdensome.

[43] In particular, the term ''penny stock'' currently does not include any put or call options issued by the Options Clearing Corporation (''OCC''). *See* 17 CFR 240.3a51–1(c). This exclusion recognizes that the put and call options issued by the OCC are subject to special disclosure requirements. *See* Exchange Act Rel. No. 30608 (Apr. 20, 1992), 57 FR 18004, 18010 n. 39 (Apr. 28, 1992) (''In addition, because put and call options issued by the OCC are already subject to special disclosure requirements, they are separately excluded from the definition of penny stock in paragraph (c) of Rule 3a51–1.''). *See also* 17 CFR 240.9b–1; CBOE Rules 9.1–9.23; and NASD Rule 2860(b)(16).

[44] *See* letter from Thomas W. Sexton, Vice President and General Counsel, National Futures Association, to Jonathan G. Katz, Secretary, SEC (Mar. 15, 2004) (''Security futures products are subject to a comprehensive regulatory scheme that provides customers with protections that are at least as stringent as the protections provided by the Commission's penny stock rules.'').

[45] *See* Pace letter, *supra* at n. 29.

[46] This exception provides that any security that is listed on the Amex pursuant to the listing criteria of the Emerging Company Marketplace, but that does not satisfy the requirements of paragraph (b), (c), or (d) of Rule 3a51–1, is a penny stock solely for purposes of the penny stock bar provisions of Exchange Act Section 15(b)(6).

[47] *See* Exchange Act Rel. No. 49037, 69 FR at 2532 n. 11.

[48] 17 CFR 240.3a51–1(e). *See* Exchange Act Rel. No. 49037, 69 FR at 2534.

[49] *Id.* at 2534 n. 34. We explained when we proposed these amendments that, as a result of these changes to paragraphs (a) and (e) of Rule 3a51–1, regardless of whether the OTC Bulletin Board or any successor to the OTC Bulletin Board is operated by a national securities exchange or a registered national securities association, the OTC Bulletin Board or any successor to it must satisfy the initial and continued listing standard requirements that we are adopting in order to qualify for either exclusion from the definition of penny stock. We noted, however, that in adopting these amendments, the Commission was not expressing a view regarding the pending application for registration of Nasdaq as a national securities exchange.

[50] *Id.* at 2534. As originally adopted, this exception provides that a security that satisfies the requirements of paragraph (e), but that does not otherwise satisfy the requirements of paragraph (a), (b), (c), or (d) of Rule 3a51–1, is a penny stock solely for purposes of the penny stock bar provisions of Exchange Act Section 15(b)(6).

[51] New paragraph (f), discussed above, will provide an exclusion for security futures products. *See* Exchange Act Rel. No. 49037, 69 FR at 2534 n. 36. We noted when we proposed these amendments that it would be appropriate to expand the exception in paragraph (e) to include this new

Continued

Only one commenter explicitly addressed these proposed amendments to paragraph (e) and this commenter stated it had no objections to them.[52] We find that these proposed amendments are consistent with the public interest and the protection of investors, and are, therefore, adopting them without modification.

III. Amendments to Rules 15g–2 and 15g–9

A. Background

1. Rule 15g–2

Rule 15g–2(a) makes it unlawful for a broker-dealer to effect a transaction in a penny stock with or for the account of a customer unless the broker-dealer distributes to the customer, prior to effecting a transaction in a penny stock, a disclosure document, as set forth in Schedule 15G,[53] and receives a signed and dated acknowledgement of receipt of that document from the customer in tangible form.[54] The document (''penny stock disclosure document''), which must contain the information set forth in Schedule 15G, gives several important warnings to investors concerning the penny stock market, and cautions investors against making a hurried investment decision. Among other things, the penny stock disclosure document points out that salespersons are not impartial advisors, that investors should compare information from the salesperson with other information on the penny stock, and that investors in penny stocks should be prepared for the possibility of losing their whole investment.

2. Rule 15g–9

Rule 15g–9, which was originally adopted as Rule 15c2–6 under the Exchange Act, was designed to address sales practice abuses involving certain speculative low-priced securities being traded in the non-Nasdaq over-the-counter (''OTC'') market.[55] Rule 15g–9 generally prohibits a broker-dealer from selling a penny stock to, or effecting the purchase of a penny stock by, any person unless the broker-dealer has approved the purchaser's account for transactions in penny stocks and received the purchaser's agreement in tangible form to the transaction.[56]

In approving an account for transactions in penny stocks, a broker-dealer must obtain sufficient information from the customer to make an appropriate suitability determination, provide the customer with a statement setting forth the basis of the determination, and obtain a signed copy of the suitability statement from the customer in tangible form.[57] By requiring the customer to agree in tangible form to purchases of penny stocks, Rule 15g–9(a)(2)(ii) was intended to provide the customer with an opportunity to make an investment decision outside of a high-pressure telephone conversation with a salesperson. It removes the pressure for an immediate decision.[58] We believe this requirement is critical to the effectiveness of the rule.[59]

In addition, the requirement that the broker-dealer provide a copy of its suitability determination to the customer prior to the customer's commitment to purchase a penny stock was intended to provide the customer with the opportunity to review that determination and decide whether the broker-dealer had made a good faith attempt to consider the customer's financial situation, investment experience and investment objectives.[60] The requirement that the broker-dealer receive a signed copy of the suitability statement in tangible form is also intended ''to convey to the customer the importance of the suitability statement, and to prevent a salesperson from convincing the customer to sign the statement without a review for accuracy.''[61]

B. Amendments to Rules 15g–2 and 15g–9

The amendments to Rule 15g–2(b) will impose a uniform waiting period of two business days that can be satisfied by waiting two days after sending the penny stock disclosure document required by the rule electronically or by mail or some other paper-based means.[62] As amended, the rule will make it unlawful for a broker-dealer to effect a transaction in a penny stock for or with the account of a customer unless, prior to effecting the transaction, the broker-dealer distributes to the customer a penny stock disclosure document, and has obtained from the customer a signed and dated acknowledgement of receipt of that document.[63] The amendments to Rule 15g–2 are designed to preserve parity between electronic and paper communications in the context of the disclosure requirements of the penny stock rules.

We are also amending Rule 15g–9 to provide that a broker-dealer cannot execute the relevant penny stock transaction until at least two business days after it has sent the suitability statement required by Rule 15g–9(b)[64]

---

exclusion for security futures products. As a result, security futures products will be treated in the same way as put or call options issued by the OCC for purposes of the exception in paragraph (e). We also explained that the expansion of the exception in paragraph (e) to include paragraph (g) was intended to clarify a potential ambiguity in the rule, and it was not intended to be a substantive change to the rule.

[52] *See* Pace letter, *supra* at n. 29.

[53] 17 CFR 240.15g–100 (''Information to be included in the document distributed pursuant to 17 CFR 240.15g–2''). This disclosure document provides the customer with information and warnings about the risky nature of penny stocks, details the disclosures that the broker-dealer is required to give to the customer, and contains information concerning brokers' duties and customers' rights and remedies.

[54] Rule 15g–2(a) [15 CFR 240.15g–2(a)] provides, ''(a) It shall be unlawful for a broker or dealer to effect a transaction in any penny stock for or with the account of a customer unless, prior to effecting such transaction, the broker or dealer has furnished to the customer a document containing the information set forth in Schedule 15G, 17 CFR 240.15g–100, and has obtained from the customer a manually signed and dated written acknowledgement of receipt of the document.''

[55] *See* Exchange Act Rel. No. 49037, 69 FR at 2538 n. 68 (discussing Exchange Act Rule 15c2–6).

[56] *See* 17 CFR 240.15g–9.

[57] Rule 15g–9 provides, in pertinent part:

(a) As a means reasonably designed to prevent fraudulent, deceptive, or manipulative acts or practices, it shall be unlawful for a broker or dealer to sell a penny stock to, or to effect the purchase of a penny stock by, any person unless:

* * *

(2) Prior to the transaction:

(i) The broker or dealer has approved the person's account for transactions in penny stocks in accordance with the procedures set forth in paragraph (b) of this section; and

(ii) The broker or dealer has received from the person a written agreement to the transaction setting forth the identity and quantity of the penny stock to be purchased.

[58] *See* Exchange Act Rel. No. 49037, 69 FR at 2538 n. 72 (explaining that Rule 15c2–6 was designed to interfere with the cold-calling sales tactics of ''boiler room'' operations).

[59] *Id.* (explaining that the written agreement requirement was intended to ensure that a customer's final decision would be made outside of a pressuring telephone call and that it was also intended to provide objective evidence of whether a customer agreed to a penny stock transaction).

[60] *Id.* at 2538.

[61] *Id.*

[62] *See* 17 CFR 240.15g–2(b) (''Regardless of the form of acknowledgement used to satisfy the requirements of paragraph (a) of this section, it shall be unlawful for a broker or dealer to effect a transaction in a penny stock for or with the account of a customer less than two business days after the broker or dealer sends such document.'').

[63] *See* 17 CFR 240.15g–2(a) (''It shall be unlawful for a broker or dealer to effect a transaction in any penny stock for or with the account of a customer unless, prior to effecting such transaction, the broker or dealer has furnished to the customer a document containing the information set forth in Schedule 15G, 17 CFR 240.15g–100, and has obtained from the customer a signed and dated acknowledgement of receipt of the document.'').

[64] *See* 17 CFR 240.15g–9(b)(4)(ii) (''Regardless of the form of the statement used to satisfy the requirements of paragraph (b)(4)(i) of this section, it shall be unlawful for such broker or dealer to sell a penny stock to, or to effect the purchase of a penny stock by, for or with the account of a customer less than two business days after the broker or dealer sends such statement.'').

and the agreement to the transaction in a penny stock required by Rule 15g–9(a)(2)(ii)[65] electronically or by mail or some other paper-based means. The amended rule will continue to require that the broker-dealer receive these signed documents, in either electronic[66] or paper form, back from the customer before executing the transaction.[67] As with the amendments to Rule 15g–2, the amendments to Rule 15g–9 are designed to preserve parity between electronic and paper communications in the context of the disclosure requirements of the penny stock rules.

We received three comments regarding the proposed amendments to Rules 15g–2 and 15g–9. Two commenters were generally supportive,[68] while one commenter was opposed to the changes to these rules.[69]

The Pace Investor Rights Project generally supported the proposed amendments, but expressed the view that the proposed two-business day waiting period is inadequate because it is too short. In this commenter's opinion, the penny stock disclosure document required by Rule 15g–2 and the suitability statement required by Rule 15g–9 are the two most important vehicles for informing and educating the first-time penny stock investor. This commenter suggested a minimum five-business day waiting period, asserting that this longer period would provide sufficient time for the customer to reflect fully upon the proposed transaction, read the documentation, and seek additional information without sales pressure.[70]

Another commenter approved of the proposed amendments but suggested a two-calendar day waiting period instead of a two-business day waiting period, indicating that a weekend or a holiday period would provide an adequate cooling-off period. This commenter also suggested that the cooling-off period commence on receipt of the document back from the customer, because, at least with regard to electronic documents, there are verifiable electronic means of determining the exact time of receipt.[71]

In contrast, a representative of a broker-dealer characterized the proposed two-business day waiting period as ''ridiculous.''[72] In his view, the amendments were not practical because, by waiting two business days, a broker would not be giving his client best execution. Moreover, the commenter stated that the broker's client would be upset if the price of the stock the broker recommended increased during this two-day waiting period. The commenter also indicated that, rather than waiting, the client would decide to buy the stock through an Internet account as an unsolicited order and get immediate execution.[73]

After carefully considering the comments, we are adopting the two-business day waiting period as proposed. We believe that this time period effectively preserves the status quo by replicating the time it would take for postal delivery of the documents required by Rules 15g–2 and 15g–9.[74]

While we appreciate the suggestions to expand the waiting period to five business days or constrict it to two calendar days, we are not persuaded that either suggestion would provide superior protections to investors. We believe that two business days is sufficiently long period of time for potential penny stock investors to reflect on a proposed transaction, and that a five-business day waiting period would unnecessarily impair investors' ability to engage in transactions that they choose to complete.

Moreover, neither a five-business day waiting period nor a two-calendar day waiting period would replicate the cooling-off period of postal mail. Our intention in proposing these amendments was to provide investors with the same cooling-off period, regardless of the means of communication. A two-business day waiting period accomplishes this. For the same reason, we decline to adopt the suggestion to commence the cooling-off period on receipt of the document back from the customer. We continue to believe that the appropriate time to begin the waiting period is when the documents are sent by the broker-dealer.[75]

With respect to the concerns expressed by the representative of the broker-dealer, we believe that they do not reflect the limited circumstances in which Rules 15g–2 and 15g–9 apply.[76] As we discussed in detail when we proposed these rule amendments, the rules are narrowly focused to protect retail investors against the types of abusive and fraudulent sales practices that Congress considered in enacting the Penny Stock Reform Act—''boiler room'' sales tactics and so-called ''pump and dump'' schemes by penny stock market makers. In addition, as noted above, we do not believe that the explicit waiting periods imposed under these amendments will increase the existing burdens under the penny stock rules. Indeed, with respect to communications sent through the mail, the rules already effectively impose a similar waiting period.

One commenter expressed concern regarding e-mail-only delivery and acknowledgement, or Web-based methods requiring only a single click or response as a means of satisfying the requirements of the penny stock rules.[77] In this commenter's view, hard copy delivery is more effective for initial educational and cooling-off purposes.[78]

Although we understand this commenter's concerns, we originally addressed this issue in our 1996

[65] *See* 17 CFR 240.15g–9(a)(2)(ii)(B) (''Regardless of the form of the agreement used to satisfy the requirements of paragraph (A) of this section, it shall be unlawful for such broker or dealer to sell a penny stock to, or to effect the purchase of a penny stock by, for or with the account of a customer less than two business days after the broker or dealer sends such agreement.'').

[66] *See* Exchange Act Rel. No. 49037, 69 FR at 2540 n. 96 (noting that an electronic acknowledgement of receipt generated automatically by certain e-mail programs when an e-mail message is delivered or opened would not satisfy any of these requirements).

[67] The amendments require that the broker-dealer continue to receive: (1) A signed and dated suitability statement as required under Rule 15g–9(b); and (2) an agreement to a transaction in a penny stock as required by Rule 15g–9(a)(2)(ii).

[68] *See* Pace letter, *supra* at n. 29, and Stoecklein letter, *supra* at n. 40.

[69] *See* letter from Mark Beloyan to Jonathan G. Katz, Secretary, SEC (Mar. 15, 2004) (''Beloyan letter'').

[70] *See* Pace letter.

[71] *See* Stoecklein letter.

[72] *See* Beloyan letter (emphasis in original).

[73] *Id.* This commenter stated that ''timing is the main component of the stock market and if you take timing away from brokers then you take the ability to trade and this doesn't serve the investment community.''

[74] *See* Exchange Act Rel. No. 49037, 69 FR at 2536 and 2548.

[75] *Id.* at 2540.

[76] *Id.* at 2537–38. Most notably, these rules would not apply to broker-dealers that have not received more than five percent of their commissions and certain other revenue from transactions in penny stocks during each of the preceding three months and have not made a market in the penny stock to be purchased by the customer during the preceding twelve months. *See* Rule 15g–1(a) [17 CFR 240.15g–1(a)]. In addition, they do not apply when the customer is an institutional accredited investor or when the broker-dealer did not recommend to the customer the penny stock to be purchased. *See* Rules 15g–1(b) and (e) [17 CFR 240.15g–1(b) and (e)]. Moreover, the provisions of Rule 15g–9 do not apply if the customer is an established customer of the broker-dealer; that is, if the customer has had an account with the broker-dealer in which the customer (1) has effected a securities transaction or deposited funds more than one year previously, or (2) has already made three purchases involving different penny stocks on different days. *See* Rules 15g–9(c)(3) and 15g–9(d)(2) [17 CFR 240.15g–9(c)(3) and 240.15g–9(d)(2)].

[77] *See* Pace letter, *supra* at n. 29.

[78] *Id.* (''We believe that hard copy delivery will be more effective for initial educational and cooling-off purposes. In particular, we believe it is very important for customers to review the broker's suitability determination. In general, we do not support e-mail-only delivery and acknowledgment approaches or web-based methods requiring only a single click or response.'').

electronic media release, which provided guidance to broker-dealers, transfer agents, and investment advisers regarding the use of electronic media to fulfill their delivery obligations under the Federal securities laws. Among other things, we explicitly allowed broker-dealers to meet their delivery obligations under the penny stock rules by electronic means.[79] We specifically determined, however, that broker-dealers should continue to obtain from customers signatures and agreements in tangible form under the penny stock rules.[80] Congress subsequently determined in the Electronic Signatures in Global and National Commerce Act (''Electronic Signatures Act'') that no signature, contract, or other record relating to a transaction in interstate or foreign commerce may be denied legal effect, validity or enforceability solely because it is in electronic form.[81] Implementation of the provisions of the Electronic Signatures Act in the context of Exchange Act Rules 15g–2 and 15g–9 requires us to strike a balance between facilitating the use of electronic communications, as contemplated by the Electronic Signatures Act, and maintaining the important investor protections of the Penny Stock Reform Act.[82]

Moreover, we believe that this commenter's concern about an acknowledgment procedure consisting of simply a single click or response is largely addressed by existing requirements of the penny stock rules. Investors must acknowledge the receipt of three separate documents pursuant to Rules 15g–2 and 15g–9. We believe that three separate documents and the acknowledgment procedures they require should alert investors to the significance of their decision to invest in a penny stock.[83] In addition, as discussed below, we are also adopting amendments to Schedule 15G designed to ensure that the disclosure, in the case of electronic transmission, is clear and meaningful. Specifically, the first paragraph of the penny stock disclosure document tells investors that it contains important information and that they should read it carefully before they sign it and before they decide to purchase or sell a penny stock.

IV. Amendments to Schedule 15G

We proposed a number of amendments to the penny stock disclosure document and its instructions set forth in Schedule 15G.[84] The proposed amendments were intended to modernize the document and make it more readable and more useful to potential penny stock investors.[85] In particular, we proposed eliminating specific references to Nasdaq such as ''quoted on NASDAQ,'' ''quoted on the NASDAQ system'' or ''quoted on the NASD's automated quotation system.'' We also proposed revising the document, consistent with the amendments to Rule 3a51–1 discussed above, to inform investors that penny stocks may trade on facilities of national securities exchanges and foreign exchanges. In addition, we proposed revising the penny stock disclosure document so that it would inform penny stock customers of the procedures, including waiting periods, to be followed in light of the amendments to Rules 15g–2 and 15g–9. We also proposed adding the Internet addresses for the Commission, National Association of Securities Dealers, Inc. (''NASD''), and the North American Securities Administrators Association, Inc.

Moreover, we proposed to significantly reorganize the penny stock disclosure document to make it more readable to investors. The original penny stock disclosure document was divided into two parts. The first part set forth in a single page the items required to be disclosed pursuant to Section 15(g)(2) of the Exchange Act (''Summary Document'').[86] The second part supplemented and explained in greater detail the information provided in the Summary Document (''Explanatory Document'').[87] We proposed to simplify and update the Summary Document and replace the Explanatory Document with a hyperlink to (or in the case of a paper document, the Internet address of) the section of the Commission's Web site that provides investors with information regarding microcap securities, including penny stocks.[88]

We also proposed revising Schedule 15G so that it would provide instructions regarding how to electronically provide the penny stock disclosure document to investors.[89] For broker-dealers that electronically send their customers a penny stock disclosure document, the amendments we are adopting will require the e-mail containing the penny stock disclosure document to have as a subject line: ''Important Information on Penny Stocks.'' If the penny stock disclosure document is reproduced in the text of the e-mail, it would need to be clear and easy to read. When information is required to be printed in bold-face type, underlined, or capitalized, the proposed amendments to the rule would allow issuers to satisfy such requirements by presenting the information in any

[79] *See* Exchange Act Rel. No. 37182 (May 9, 1996), 61 FR 24644, 24649 n. 50 (May 15, 1996) (''While broker-dealers may not meet the signature requirement under Rule 15g–9 by electronic means, the Commission believes that, consistent with the guidance set forth in this interpretation, they may meet their delivery obligations to their customers under this rule by electronic means. The risk disclosure document that broker-dealers are required to furnish to their customers under Rule 15g–2 is subject to strict formatting and typefacing restrictions. In order to comply with the requirements set forth in the instructions to Schedule 15G, a risk disclosure document delivered electronically, when printed, would have to result in a document that meets the requirements and contains the exact text of Schedule 15G.'').

[80] *Id.* at 24646 n. 12 (''[T]he Commission believes that in order to fulfill the purposes of the Securities Enforcement Remedies and Penny Stock Reform Act of 1990, broker-dealers should continue to have customers manually sign and return in paper form any documents that require a customer's signature or written agreement.'').

[81] *See* Pub. L. 106–229, 114 Stat. 464 (2000) (codified at 15 U.S.C. 7001 *et seq.* (2001)).

[82] *See* Exchange Act Rel. No. 49037, 69 FR at 2539 n. 90. In that footnote, we explained that we were expressing no view regarding how the Electronic Signatures Act affects the federal securities laws other than with respect to the effect of Section 101(a) of the Act on: (1) The ability of broker-dealers to obtain from customers signatures and agreements in electronic form to satisfy the requirements of Exchange Act Rule 15g–9 that customers provide a signed and dated copy of the suitability statement and an agreement for a particular transaction; and (2) the Rule 15g–2 requirement that customers provide a signed and dated acknowledgement of receipt of the penny stock disclosure document.

[83] We believe that there should be separate acknowledgment procedures for each document required by Rules 15g–2 and 15g–9 and that these procedures must provide a meaningful opportunity for investors to review all of the information being provided to them before acknowledging receipt of each document. For example, before providing an investor with an opportunity to acknowledge receipt, the entire document should be provided to the investor in clear, easy-to-read type reasonably calculated to draw the investor's attention to the language in the document. For longer documents, an investor should be required to scroll through the entire document before being able to acknowledge receipt of the document. As a result, we do not believe it would be appropriate for firms to permit investors to acknowledge the receipt of all three documents by means of a single click.

[84] *See* 17 CFR 240.15g–100.

[85] *See* Exchange Act Rel. No. 49037, 69 FR at 2542 (explaining that the current penny stock disclosure document was written over a decade ago and reflects the market as it existed at that time, and that the proposed revisions to the penny stock disclosure document would bring it up-to-date, and also make it more streamlined and understandable to investors).

[86] *Id.* at 2541.

[87] *Id.*

[88] The revised document is designed to be succinct and to catch the attention of readers by highlighting issues that call for investor caution. Moreover, we believe that the revised document achieves the purposes of Section 15(g)(2) of the Exchange Act more effectively by providing investors with the information in a more accessible and understandable format. *See* Exchange Act Rel. No. 49037, 69 FR at 2541. *See also* Exchange Act Rel. No. 30608, 57 FR at 18017–18 (discussing the penny stock disclosure document).

[89] In addition to the proposed instructions, the use of electronic media to provide the document is subject to applicable legal requirements. *See* Exchange Act Rel. No. 49037, 69 FR at 2539 n. 90.

manner reasonably calculated to draw attention to it.[90]

We also proposed permitting the penny stock disclosure document to be sent electronically using a hyperlink to where the document is located on the Commission's Web site. Pursuant to the adopted amendments, the e-mail containing the hyperlink will need to have as a subject line: ''Important Information on Penny Stocks.'' Immediately before the hyperlink, the text of the e-mail will need to reproduce the following statement in clear, easy-to-read type that is reasonably calculated to draw attention to the words: ''We are required by the U.S. Securities and Exchange Commission to give you the following disclosure statement: *http://www.sec.gov/investor/schedule15g.htm*. It explains some of the risks of investing in penny stocks. Please read it carefully before you agree to purchase or sell a penny stock.''

Furthermore, we are adopting amendments that will require all e-mail messages transmitting the penny stock disclosure document or a hyperlink to the penny stock disclosure document found on the Commission's Web site to provide the name, address, e-mail address and telephone number of the broker sending the message. No other information can be included in this e-mail message, except any privacy or confidentiality information routinely included in e-mail messages sent to customers from that broker, as well as instructions on how to provide a signed and dated acknowledgement of receipt of the document.[91]

We received two comments regarding the proposed changes to the penny stock disclosure document and the instructions in Schedule 15G. One commenter generally supported the proposed changes to the penny stock disclosure document, but expressed concern regarding the dissemination of this document via hyperlink, unless the hyperlink is part of a comprehensive, multi-step on-line delivery and acknowledgement procedure.[92] This commenter also viewed hard copies as preferable to electronic copies, and urged the Commission to require brokers-dealers to send customers a hard copy of the expanded information available on the Commission's Web site, unless the customer explicitly requests otherwise.[93]

We have considered these suggestions in light of the increasingly electronic nature of commerce in general and the securities industry in particular.[94] As noted previously in this release, we determined in our 1996 electronic media release that broker-dealers could satisfy the delivery requirements of the penny stock rules 15g–2 and 15g–9 by means of electronic media.[95] Moreover, we continue to believe that providing a hyperlink is an efficient method of alerting potential penny stock investors to the existence of the Commission's Web site and providing them with ready access to the useful information on our Web site about investing in penny stocks and microcap securities.[96] In addition, under the amended rules, a broker-dealer would be required to provide a customer, upon request, with a copy of the additional information regarding microcap securities, including penny stocks, from the Commission's Web site.[97]

Another commenter urged the Commission to be prescriptive and to specify in detail how the penny stock disclosure document should appear electronically, rather than allowing the information to be presented in a manner reasonably calculated to draw attention to it.[98] While we appreciate the commenter's concerns, we believe that an attempt to impose this kind of uniformity through exacting technical requirements would be both burdensome and impractical in light of the variety of software and hardware employed by broker-dealers. Rather than requiring uniformity, we have attempted to balance broker-dealers' implementation and ongoing costs with the benefits to investors. We do, however, expect broker-dealers to use this flexibility to craft clear and easily accessible penny stock disclosure documents.[99]

One commenter also suggested that the disciplinary history of a broker or firm could be provided as part of the initial disclosures.[100] While we understand the goal of trying to provide investors with information they may need in one comprehensive package, we believe that the penny stock disclosure document, as proposed, gives investors clear information about how they can easily seek out disciplinary history from NASD or their state securities official—either by telephone or via the Internet. The document also urges investors to ask about the disciplinary history of the broker and the firm with whom they are dealing. Although we could adopt the commenter's suggestion and require firms to provide this information, we believe that the procedure we are adopting today will better serve investors than such an approach. Encouraging investors to contact the NASD or their state securities regulator will not only help investors to obtain more up-to-date information, but also assist them in obtaining more comprehensive information than they might get from a broker-dealer. Moreover, requiring that such information be included in the penny stock disclosure document would undercut our goal of making the document more succinct and therefore more readable and useful to investors.[101]

We have, therefore, decided to adopt the amendments to the penny stock disclosure document and the

[90] *Id.* at 2542 n. 103 (explaining that rather than promulgating and enforcing exacting technical requirements about how the penny stock disclosure document must be presented electronically, we have decided to follow the approach we adopted in 1996). *See also* Exchange Act Rel. No. 37183 (May 9, 1996), 61 FR 24652 (May 15, 1996).

[91] *Id.* at 2542.

[92] *See* Pace letter, *supra* at n. 29 (''We applaud the Commission's proposed effort to simplify and streamline the penny stock disclosure document. We generally approve of the revised content and, in particular, we are pleased with the inclusion of toll-free numbers for regulatory agencies.'').

[93] *Id.*

[94] In our 1996 electronic media release, we noted that the electronic distribution of information provides numerous benefits and the use of electronic communications is growing among all participants in securities transactions. *See* Exchange Act Rel. No. 37182, 61 FR at 4645 (citing Securities Act Rel. No. 7233 (Oct. 6, 1995), 60 FR 53458 (Oct. 13, 1995)).

[95] *See supra* at n. 79.

[96] This approach permits investors to better analyze the penny stock transaction being offered to them since they will have access not only to the portion of the Commission's Web site that deals with investing in penny stocks and microcap securities, but also to all of the other information posted on the Commission's Web site. An interested investor could, therefore, browse the entire Commission's Web site and perhaps better educate him or herself before making an investment decision. As we noted in our 2000 electronic media release, ''One of the key benefits of electronic media is that information can be disseminated to investors and the financial markets rapidly and in a cost-effective and widespread manner.'' *See* Exchange Act Rel. No. 42728 (Apr. 28, 2000), 65 FR 25843, 25844 (May 4, 2000).

[97] *See* Exchange Act Rel. No. 49037, 69 FR at 2542.

[98] *See* Stoecklein letter, *supra* at n. 40 (''We believe that the Commission should be prescriptive and specify in detail how the proposed disclosure document should appear electronically, as opposed to allowing the satisfaction of the requirements by 'presenting the information in any manner reasonably calculated to draw attention to it.' This would provide consistency in the disclosure documentation and avoid misunderstanding or further clarification in the future.'').

[99] *See* Exchange Act Rel. No. 49037, 69 FR at 2542 n. 103.

[100] *See* Pace letter, *supra* at n. 29.

[101] Significantly, when we adopted the penny stock rules some commenters suggested that a description of the type of disciplinary history available from the NASD and the North American Securities Administrators Association, Inc. be included in the penny stock risk disclosure document. We declined to do so at that time because we believed that such a specific explanation might be confusing to the ordinary investors. *See* Exchange Act Rel. No. 30608, 57 FR at 18018 n. 113.

instructions to it set forth in Schedule 15G as proposed. These amendments recognize and keep pace with changes in communications technology over the past decade by continuing to provide potential penny stock investors with important information before a sale takes place. These amendments will enable investors and the broker-dealers with whom they do business to comply with the requirements of Rules 15g–2 and 15g–9 while using modern methods of electronic communication.

V. Other Comments

One commenter expressed concern that the penny stock rules interfere with investors' ability to make risky investments and to speculate.[102] Notably, in adopting the predecessor to Rule 15g–9, the Commission explained, ''The target of the Rule [15c2–6] is sales practice abuse and manipulation, not small issuers or speculative investment decisions per se. It is, however, in [penny stocks] that the Commission has found that a disproportionate number of such abuses occur, and it is for this reason that the Commission is adopting a prophylactic rule for recommended sales of such securities.'' [103] These amendments are designed to maintain the existing penny stock rule protections. This commenter also questioned the effect of the rule amendments on venture capital and small public companies, but did not provide any supporting information. [104]

Another commenter suggested that the ''transaction agreement'' include: (1) An up-to-date list of market makers for the solicited stock; and (2) a recent market share volume report indicating whether the soliciting broker is among the most active market makers in the solicited stock.[105] In addition, this commenter suggested that broker-dealers should be required to provide transaction agreements for a minimum time period, perhaps two months, unless two conditions are met: (1) Three qualifying transactions have taken place; and (2) the customer opts out of the requirement by electing, in writing, to no longer receive and signs a transaction agreement.[106]

While we appreciate this commenter's thoughtful suggestions, our goal in this rulemaking is only to update the penny stock rules and ensure that they continue to provide the protections they have in the past decade despite changing market structures, new technology, and legislative developments. We, therefore, decline at this time to impose any additional requirements on broker-dealers.

Another commenter stated that the proposed amendments are extremely hard to understand, and suggested that they be simplified.[107] While we recognize that the penny stock rules are complex, we note that broker-dealers that do not solicit penny stock transactions are exempt from the rules' requirements. The penny stock rules are narrowly focused to protect retail investors against the types of abusive and fraudulent sales practices that Congress considered in enacting the Penny Stock Reform Act—''boiler room'' sales tactics and so-called ''pump and dump'' schemes by penny stock market makers. While we are committed to ''plain English'' and regulatory simplification to the extent possible, broker-dealers that choose to engage in this particular business should be prepared to adhere to the requirements of the penny stock rules.

Moreover, two commenters expressed concern about short selling activity in penny stocks.[108] We considered these comments in connection with adopting Regulation SHO.[109]

VI. Paperwork Reduction Act Analysis

A. Rule 3a51–1 Analysis

In proposing the amendments to Rule 3a51–1, we noted that the rule does not impose any ''collection of information'' requirements within the meaning of the Paperwork Reduction Act of 1995 (''PRA'').[110] Similarly, the amendments to Rule 15g–100 do not impose any ''collection of information'' requirements with the meaning of the PRA.

B. Rules 15g–2 and 15g–9 Analyses

In proposing these amendments to the penny stock rules, we noted that certain provisions of the amendments to Rules 15g–2 and 15g–9 that we are adopting contain ''collection of information'' requirements within the meaning of the PRA.[111] The title for the collection of information under current Rule 15g–2, ''Risk Disclosure Document Relating To the Penny Stock Market,'' contains a currently approved collection of information under OMB control number 3235–0434. The title for the collection of information under current Rule 15g–9, ''Sales Practice Requirements for Certain Low-Priced Securities,'' which the Commission is amending, contains a currently approved collection of information under OMB control number 3235–0385.

In the proposing release, we solicited comment on the collection of information requirements and submitted these requirements to the Office of Management and Budget (''OMB'') for review in accordance with 44 U.S.C. 3507 and 5 CFR 1320.11. OMB asked that we resubmit the requirements when the Commission adopted the rule amendments. The information received by a broker-dealer pursuant to Rules 15g–2 and 15g–9 is mandatory. An agency may not sponsor, conduct, or require response to an information collection, unless a currently valid OMB control number is displayed. The information received by a broker-dealer pursuant to Rules 15g–2 and 15g–9 is also governed by Regulation S–P [112] and the internal policies of the broker-dealer regarding confidentiality. In addition, the Commission or an SRO may review

[102] *See* Beloyan letter, *supra* at n. 69 (''[Investors] know what they are doing and they know they want to risk some of their capital for a potential big reward or even want the chance to win big if the[y] [sic] find the next Microsoft, Cisco, [sic] IBM. Why does the SEC want to take that away from consenting adults? If an investor has bought penny stocks before at another firm and wants to do business with me in penny stocks, he still has to fill out the existing forms, why make him wait 2 days and jump through all those hoops?'').

[103] Exchange Act Rel. No. 27160 (Aug. 22, 1989), 54 FR 35468, 35479 (Aug. 28, 1989). When Congress adopted the Penny Stock Reform Act, it explicitly endorsed Rule 15c2–6. *See* House Comm. on Energy and Commerce, *Report to Accompany the Penny Stock Reform Act of 1990,* H.R. Rep. No. 617, 101st Cong., 2d Sess. (Jul. 23, 1990) (reporting H.R. 4497) at 7 (''This legislation amends both the Securities Exchange Act of 1934 (Exchange Act) and the Securities Act of 1993 (Securities Act) and issues legislative directives with the intention of curbing the pervasive fraud and manipulation of the penny stock market. * * * The Committee supports the ongoing initiatives of the Commission in combating penny stock fraud, including its adoption in August 1989 of its penny stock cold calling rule, Rule 15c2–6, under the Exchange Act.'').

[104] *See* Beloyan letter, *supra* at n. 69.

[105] *See* Pace letter, *supra* at n. 29.

[106] *Id.*

[107] *See* letter from Jerry Seale, Investment Representative, BSC Securities, to Jonathan G. Katz, Secretary, SEC (Mar.15, 2004) (''With all due respect, the proposed regulations are extremely hard to understand. My suggestion is to simplify the rules in a summary form. You shouldn't have to have a law degree or spend 3 or 4 days in deep study to understand what is required. My interest in this rule is only to properly educate investors who come to me wanting to buy penny stocks. I never have solicited them.'').

[108] *See* letter from William A. Dedrick, to Jonathan G. Katz, Secretary, SEC (Jan. 19, 2004) and letter from Richard W. Treharne, IV, to Jonathan G. Katz, Secretary, SEC (Feb. 25, 2004).

[109] *See* Exchange Act Rel. No. 50103 (Jul. 28, 2004), 69 FR 48008 (Aug. 6, 2004).

[110] *See* Exchange Act Rel. No. 49037, at section VIII. *See also* 44 U.S.C. 3501, *et seq.*

[111] *Id.*

[112] *See* Title V of the Gramm-Leach-Bliley Act, Pub. L. 106–102, 113 Stat. 1338 (1999) (codified at 15 U.S.C. 6801 *et seq.*) (''Act''). Pursuant to Section 504 of the Act, the Commission adopted Regulation S–P on June 22, 2000. *See* 17 CFR Part 248, Privacy of Consumer Financial Information (Regulation S–P), Exchange Act Rel. No. 42974 (June 22, 2000), 65 FR 40334 (June 29, 2000).

the information during the course of an examination.

We received eleven comments regarding the proposed amendments to Rules 15g–2 and 15g–9. None of the commenters addressed the PRA analysis of the proposed amendments, or any of the PRA issues raised by these amendments.

1. Summary of Collection of Information

Rule 15g–2 requires broker-dealers to provide their customers with a penny stock disclosure document, as set forth in Schedule 15G under the Exchange Act, prior to each customer's first non-exempt transaction in a penny stock. The rule also requires a broker-dealer to obtain from its customer, in tangible form, a signed acknowledgement that he or she has received the required penny stock disclosure document. The broker-dealer must maintain a copy of the customer's acknowledgement for at least three years following the date on which the penny stock disclosure document was provided to the customer. During the first two years of this period, the document must be maintained in an easily accessible place.[113]

The amendments that the Commission is adopting do not change the substance of the collection of information required by Rule 15g–2. The penny stock disclosure document will still have to be provided by a broker-dealer to a customer prior to a non-exempt transaction in a penny stock, and a signed copy of that document will still have to be received by the broker-dealer and maintained in its records for the required period of time.

Rule 15g–9 requires a broker-dealer to produce a suitability determination for its customers and to obtain from the customer, in tangible form, a signed copy of that document prior to executing certain recommended transactions in penny stocks. The broker-dealer must also obtain, in tangible form, the customer's agreement to a particular recommended transaction in penny stocks, listing the issuer and number of shares of the particular penny stock to be purchased.

As with the amendments to Rule 15g–2, the amendments to Rule 15g–9 that we are adopting do not change the substance of the collection of information required by the rule. Broker-dealers will continue to be required to provide suitability determinations to their customers and receive a signed copy of that document prior to effecting non-exempted transactions in penny stocks.

The amendments to Rules 15–2 and Rule 15–9 respond to advances in technology and legislative developments governing the expanded use of electronic communications. They are designed to maintain investor protections regardless of whether broker-dealers that are subject to the penny stock rules use paper copies or electronic communications to obtain the required documents and signatures required by Rules 15g–2 and 15g–9.

2. Proposed Use of the Information

As the Commission discussed in detail when proposing these amendments, Rules 15g–2 and 15g–9 were adopted to provide important protections to investors solicited by broker-dealers to purchase penny stocks. These rules were intended to address some of the abusive and fraudulent sales practices (*e.g.*, boiler room tactics and ''pump and dump'' schemes) that had characterized the market for penny stocks. The requirement in Rule 15g–2 that a broker-dealer provide the Schedule 15G penny stock disclosure document to its customer prior to effecting a penny stock transaction recommended by the broker-dealer was intended to make the customer aware of the risky nature of investing in penny stocks and provide information about the rights and remedies available to investors under the Federal securities laws. The requirement under Rule 15g–2 that a broker-dealer obtain, in tangible form, a signed acknowledgement of receipt of the Schedule 15G penny stock disclosure document was designed to give a customer the opportunity to carefully consider, outside of a high-pressure sales call, whether an investment in a penny stock that is recommended by a broker-dealer is appropriate for him or her.

Similarly, the requirement in Rule 15g–9 that a broker-dealer provide a copy of its suitability determination to the customer prior to the customer's commitment to purchase a penny stock was intended to provide the customer with the opportunity to review that determination and decide whether the broker-dealer has made a good faith attempt to consider the customer's financial situation, investment experience, and investment objectives. The requirement that a broker-dealer receive, in tangible form, a signed copy of the suitability statement is also intended to convey to the customer the importance of the suitability statement, and to prevent a salesperson from convincing the customer to sign the statement without a review for accuracy. The Rule 15g–9 requirement that the customer provide, in tangible form, an agreement to a particular transaction is intended to protect investors from fraudulent sales practices by identifying the particular stock and number of shares the customer has agreed to purchase.

The amendments to Rules 15g–2 and 15g–9 will apply to the means for the collection of information when broker-dealers send and receive the required documents electronically. The waiting period is designed to provide investors communicating electronically with their broker-dealers with protections that are comparable to those that are available under the current penny stock rules, in light of the delays inherent in postal delivery.

As the Commission stated in proposing the amendments, the information collected and maintained by broker-dealers pursuant to Rules 15g–2 and 15g–9, including documents obtained by means of electronic communications, may be reviewed during the course of an examination by the Commission or an SRO for compliance with the provisions of the Federal securities laws and applicable SRO rules.

3. Respondents

Exchange Act Rules 15g–2 and 15g–9 only apply to broker-dealers effecting transactions in penny stocks that are not otherwise exempt. For example, Rule 15g–2 does do not apply if the security involved is not a penny stock, or if the broker-dealer did not recommend the transaction to its customer.[114] It also does not apply to a broker-dealer that has not been a market maker in the particular penny stock that it is recommending during the immediately preceding twelve months, or that has not received more than 5 percent of its commissions and certain other revenue from transactions in penny stocks during each of the preceding three months.[115] Similarly, transactions with institutional or accredited investors are not subject to Rule 15g–2.[116] The rule also does not apply to transactions that meet the requirements of Regulation D under the Securities Act of 1933, or transactions with an issuer not involving a public offering.[117] A broker-

[113] *See* 17 CFR 240.15g–2(c) (citing to 17 CFR 240.17a–4(b)).

[114] Rule 15g–1(e) [17 CFR 240.15g–1(e)].

[115] Rule 15g–1(a) [17 CFR 240.15g–1(a)].

[116] *See* Rule 15g–1(b) [17 CFR 240.15g–1(b)].

[117] *See* Rule 15g–1(c) [17 CFR 240.15g–1(c)]. It also does not apply to transactions in which the customer is an issuer, or a director, officer, general partner, or direct or indirect beneficial owner of more than 5 percent of any class of equity security

Continued

dealer must provide one copy of the penny stock disclosure document to its customer, prior to the first penny stock transaction that is subject to the rule. Essentially, Rule 15g–2 only applies to broker-dealers making markets in the penny stocks they are recommending to non-accredited investors when they enter into their first penny stock transaction.

The same exemptions that apply to Rule 15g–2 also apply to Rule 15g–9,[118] along with one additional exemption. The provisions of Rule 15g–9 do not apply if the customer is an ''established customer'' of the broker-dealer, that is, if the customer has had an account with the broker-dealer in which the customer (1) has effected a securities transaction or deposited funds more than one year previously, or (2) has already made three purchases involving different penny stocks on different days.[119] Thus, the requirements to provide a suitability determination and a transaction agreement under Rule 15g–9 only apply in limited circumstances—if the customer is a relatively new customer of the penny stock market-making broker-dealer or has limited experience with penny stocks and is not an institutional accredited investor, and if the broker-dealer has solicited the customer to engage in a penny stock transaction. While a broker-dealer must provide the suitability determination to its customer once prior to that customer's first penny stock transaction that is subject to Rule 15g–9, the broker-dealer may have to obtain more than a single transaction agreement under the rule, depending on the circumstances. When the Commission proposed these amendments, it estimated that there are approximately 240 broker-dealers making markets in penny stocks that could, potentially, be subject to either Rule 15g–2 or Rule 15g–9.[120]

4. Total Annual Reporting and Recordkeeping Burden

The amendments to Rules 15g–2 and 15g–9 are designed to adapt these two rules to an electronic or Internet-based environment. Under the amendments, all penny stock transactions that are not exempted would be subject to a waiting period of two business days from the time a broker-dealer sends the required documents to its penny stock customer. Except for the imposition of a formal waiting period, the rule amendments will not impose any significant additional recordkeeping, reporting, or other compliance requirement on broker-dealers.

The Commission noted when it proposed these amendments that a broker-dealer that becomes subject to the waiting period by complying with the rules' requirements through electronic communications may incur some additional costs associated with keeping track of the waiting period. Hence, the Commission recognized that under these amendments, broker-dealers subject to the penny stock rules may need to develop a tracking method to ensure compliance with the waiting period after receipt of the required signatures and agreements under the rules. As the Commission stated when it proposed the amendments, we expected that the amendments would result only in a minimal increase in burden. Moreover, the Commission stated that it believed there should be no non-hour costs associated with the requirement. We received no comments regarding these statements in the proposing release. We, therefore, are utilizing them for the purposes of this PRA analysis.

The Commission estimated that there are approximately 240 broker-dealers that could potentially be subject to current Rule 15g–2, and that each one of these firms processes an average of three new customers for penny stocks per week. Thus, each respondent will process approximately 156 penny stock disclosure documents per year (three new customers × 52 weeks per year). If communications in tangible form alone are used to satisfy the requirements of Rule 15g–2, the Commission calculated that (a) the copying and mailing of the penny stock disclosure document should take no more than two minutes per customer, and (b) each customer should take no more than eight minutes to review, sign, and return the penny stock disclosure document. Thus, the total existing respondent burden is approximately 10 minutes per response, or an aggregate total of 1,560 minutes per respondent (156 penny stock disclosure documents × ten minutes per respondent). Since there are 240 respondents, the current annual burden is 374,400 minutes (1,560 minutes per each of the 240 respondents) or 6,240 hours. In addition, broker-dealers could incur a recordkeeping burden of approximately two minutes per response. Since there are approximately 156 responses for each respondent, the respondents would incur an aggregate recordkeeping burden of 74,880 minutes (240 respondents × 156 responses for each × 2 minutes per response) or 1,248 hours, under current Rule 15g–2. Accordingly, the aggregate annual hour burden associated with Rule 15g–2 (that is, if all respondents continue to use tangible means of communication to comply with the rule) is approximately 7,488 hours (6,240 response hours + 1,248 recordkeeping hours). We received no comments regarding this estimate. We are therefore utilizing this estimate in connection with calculating the burden hours required to comply with Rule 15g–2.

a. Estimated Burden Hours

i. Burden Hours for Rule 15g–2

The Commission estimated that there are approximately 240 broker-dealers that could potentially be subject to current Rule 15g–2, and that each one of these firms processes an average of three new customers for penny stocks per week. Thus, we concluded that each respondent would process approximately 156 penny stock disclosure documents per year. If communications in tangible form alone are used to satisfy the requirements of Rule 15g–2, the Commission calculated that (a) the copying and mailing of the penny stock disclosure document should take no more than two minutes per customer, and (b) each customer should take no more than eight minutes to review, sign and return the penny stock disclosure document. Thus, the total existing respondent burden is approximately 10 minutes per response, or an aggregate total of 1,560 minutes per respondent. Since there are 240 respondents, the current annual burden is 374,400 minutes (1,560 minutes per each of the 240 respondents) or 6,240 hours. In addition, broker-dealers could incur a recordkeeping burden of approximately two minutes per response. Since there are approximately 156 responses for each respondent, we determined that the respondents would incur an aggregate recordkeeping burden of 74,880 minutes (240 respondents × 156 responses for each ×

of the issuer of the penny stock that is the subject of the transaction. Rule 15g–1(d) [17 CFR 240.15g–1(d)].

[118] Rule 15g–9(c) [17 CFR 240.15g–9(c)] provides that transactions exempt under Rules 15g–1(a) (non-market maker exemption), 15g–1(b) (institutional accredited investor exemption), 15g–1(d) (issuer/officer/director/significant shareholder exemption), and 15g–1(e) (non-recommended transaction exemption) are not subject to Rule 15g–9. While Rule 15g–9 does not specifically include the exemption found in Rule 15g–1(c), it nevertheless provides a somewhat similar exemption in that it exempts transactions that meet the requirements of 17 CFR 230.505 or 230.506 (including, where applicable, the requirements of 17 CFR 230.501 through 230.506, and 17 CFR 230.507 through 230.508), or transactions with an issuer not involving a public offering.

[119] *See* Rules 15g–9(c)(3) and 15g–9(d)(2) [17 CFR 240.15g–9(c)(3) and 240.15g–9(d)(2)].

[120] *See* Exchange Act Rel. No. 49037, 69 FR at 2544 n. 112. This estimate elicited no comments. We are, therefore, assuming that this estimate is accurate and we are using it to calculate the burden hour estimate required by the PRA.

2 minutes per response) or 1,248 hours, under Rule 15g–2. Accordingly, we stated when we proposed the amendments that the current aggregate annual hour burden associated with Rule 15g–2 (that is, assuming that all respondents provide tangible copies of the required documents) is approximately 7,488 hours (6,240 response hours + 1,248 recordkeeping hours). We received no comments regarding this estimate. We are therefore utilizing this estimate in connection with the calculation of the hour burden associated with Rule 15g–2, as amended.

We recognized, however, that the burden hours associated with Rule 15g–2 may be slightly reduced when the penny stock disclosure document required under the rule is provided through electronic means such as e-mail from the broker-dealer (*e.g.*, the broker-dealer respondent may take only one minute, instead of the two minutes estimated above, to provide the penny stock disclosure document by e-mail to its customer) and return e-mail from the customer (the customer may take only seven minutes, to review, electronically sign and electronically return the penny stock disclosure document). In this regard, if each of the customer respondents estimated above communicates with his or her broker-dealer electronically, the total ongoing respondent burden would be approximately 8 minutes per response, or an aggregate total of 1,248 minutes (156 customers × 8 minutes per respondent). Since there could be 240 respondents, the annual burden would be, if electronic communications were used by all customers, 299,520 minutes (1,248 minutes per each of the 240 respondents) or 4,992 hours. Based on information available to us, we stated that we did not believe that recordkeeping burdens under Rule 15g–2 would increase if the required documents are sent or received by means of electronic communication, so the recordkeeping burden would remain at 1,248 hours. Thus, we concluded that if *all* broker-dealer respondents were to obtain and send the documents required under the rules electronically, the aggregate annual hour burden associated with Rule 15g–2 would be 6,240 (1,248 hours + 4,992 hours). Again, we received no comments regarding these calculations. Therefore, we are once again utilizing this estimate to calculate the burden hours required for compliance with Rule 15g–2, as amended.

In addition, we stated that, if the penny stock customer requests a paper copy of the information on the Commission's Web site regarding microcap securities, including penny stocks, from his or her broker-dealer, we estimated that the printing and mailing of the document containing this information should take no more than two minutes per customer. Because many investors will have access to the Commission's Web site via computers located in their homes, or in easily accessible public places such as libraries, we estimated that, at most, a quarter of customers who are required to receive the Rule 15g–2 disclosure document will request that their broker-dealer provide them with the additional microcap and penny stock information posted on the Commission's Web site. Thus, each broker-dealer respondent would process approximately 39 requests for paper copies of this information per year or an aggregate total of 78 minutes per respondent (2 minutes per customer × 39 requests per respondent). Since there are 240 respondents, we determined that the estimated annual burden is 18,720 minutes (78 minutes per each of the 240 respondents) or 312 hours. We received no comments regarding this estimate. We are therefore utilizing it in connection with calculating the hour burden associated with Rule 15g–2, as amended.

We acknowledged that we have no way of knowing how many broker-dealers and customers will choose to communicate electronically. We assumed, however, that 50 percent of respondents would continue to provide documents and obtain signatures in tangible form and 50 percent would choose to communicate electronically to satisfy the requirements of Rule 15g–2, the total aggregate burden hours would be 7,176 ((aggregate burden hours for documents and signatures in tangible form × 0.50 of the respondents = 3,744 hours) + (aggregate burden hours for electronically signed and transmitted documents × 0.50 of the respondents = 3,120 hours) + (312 burden hours for those customers making requests for a copy of the information on the Commission's Web site)). These estimates were described in the proposing release and elicited no comments. We are, therefore, utilizing them in calculating the hour burdens required for compliance with Rule 15g–2, as amended.

ii. Burden Hours for Rule 15g–9

Likewise, we used the estimate of approximately 240 broker-dealers in our analysis of Rule 15g–9. As with our Rule 15g–2 burden hour analysis, we first used the current burden hour analysis that assumes that only tangible means of communication are used to satisfy the rule's requirements. Next, we determined burden hours assuming that only electronic means of communication were used by broker-dealers and their customers. Finally, we assumed that half of the time communications in tangible form were used, and half of the time electronic means of communication were used. We received no comments regarding any estimates or calculations used in the analysis of the burden hours of Rule 15g–9 set forth in the proposing release.

Recognizing at the outset that although the burden of Rule 15g–9 on a respondent varies depending on the frequency with which new customers are solicited, we estimated that firms process an average of three new customers for penny stocks per week. We again concluded that each respondent would process approximately 156 new customer suitability determinations per year. We also estimated that a broker-dealer would expend approximately one-half hour per new customer in obtaining, reviewing, and processing (including transmitting to the customer) the information required by Rule 15g–9, and each respondent would consequently spend 78 hours annually (156 customers × .5 hours) obtaining the information required in the rule. We determined, based on the estimate of 240 broker-dealer respondents, that the current annual burden of Rule 15g–9 is 18,720 hours (240 respondents × 78 hours). We received no comments regarding this estimate. We are therefore utilizing it in connection with the calculation of the burden hours of the Rule 15g–9, as amended.

In addition, as with Rule 15g–2, we estimated that if tangible communications alone are used to transmit the documents required by Rule 15g–9, each customer should take: (1) No more than eight minutes to review, sign and return the suitability determination document; and (2) no more than two minutes to either read and return or produce the customer agreement for a particular recommended transaction in penny stocks, listing the issuer and number of shares of the particular penny stock to be purchased, and send it to the broker-dealer. Thus, we stated that the total current customer respondent burden is approximately 10 minutes per response, for an aggregate total of 1,560 minutes for each broker-dealer respondent. Since there are 240 respondents, we concluded that the current annual burden for customer responses is 374,400 minutes (1,560 customer minutes per each of the 240 respondents) or 6,240 hours. We

received no comments regarding this estimate. We are therefore utilizing it in connection with calculating the hour burdens required for compliance with Rule 15g–9.

In addition, we estimated that, if tangible means of communications alone are used, broker-dealers could incur a recordkeeping burden under Rule 15g–9 of approximately two minutes per response. Since there are approximately 240 broker-dealer respondents and each respondent would have approximately 156 responses annually, we stated that respondents would incur an aggregate recordkeeping burden of 74,880 minutes (240 respondents × 156 responses × 2 minutes per response), or 1,248 hours. Accordingly, we determined that the aggregate annual hour burden associated with Rule 15g–9 is 26,208 hours (18,720 hours to prepare the suitability statement and agreement + 6,240 hours for customer review + 1,248 recordkeeping hours). We received no comments regarding these estimates. We are, therefore, utilizing them in calculating the hour burdens associated with Rule 15g–9, as amended.

We recognized that under the amendments to Rule 15g–9, the burden hours may be slightly reduced if the transaction agreement required under the rule is provided through electronic means such as e-mail from the customer to the broker-dealer (*e.g.*, the customer may take only one minute, instead of the two minutes estimated above, to provide the transaction agreement by e-mail rather than regular mail). We stated that if each of the customer respondents estimated above communicates with his or her broker-dealer electronically, the total burden hours on the customers would be reduced from 10 minutes to 9 minutes per response, or an aggregate total of 1,404 minutes per respondent (156 customers × 9 minutes for each customer). Since there are 240 respondents, we estimated that the annual customer respondent burden, if electronic communications were used by all customers, would be approximately 336,960 minutes (240 respondents × 1,404 minutes per each respondent), or 5,616 hours. We also stated that we did not believe the hour burden on broker-dealers in obtaining, reviewing, and processing the suitability determination would be changed through use of electronic communications. In addition, we stated that we did not believe that, based on information currently available to us, recordkeeping burdens under Rule 15g–9 would change where the required documents were sent or received through means of electronic communication. Thus, we determined that if all broker-dealer respondents obtain and send the documents required under the rule electronically, the aggregate annual hour burden associated with Rule 15g–9 would be 25,584 hours (18,720 hours to prepare the suitability statement and agreement + 5,616 hours for customer review + 1,248 recordkeeping hours). We received no comments regarding these estimates. We are, therefore, utilizing them in our calculations of the burden hours imposed by Rule 15g–9, as amended.

We stated that we cannot estimate how many broker-dealers and customers will choose to communicate electronically. We stated that if we assume that 50 percent of respondents would continue to provide documents and obtain signatures in tangible form, and 50 percent would choose to communicate electronically in satisfaction of the requirements of Rule 15g–9, the total aggregate hour burden would be 25,896 burden hours ((26,208 aggregate burden hours for documents and signatures in tangible form × 0.50 of the respondents = 13,104 hours) + (25,584 aggregate burden hours for electronically signed and transmitted documents × 0.50 of the respondents = 12,792 hours)). We received no comments regarding these estimates and are, therefore, utilizing them to calculate the hour burden associated with Rule 15g–9.

iii. Aggregate Burden Hours for the Rule Amendments

When we proposed these rule amendments, we concluded that the burden hours required for compliance with Rule 15g–2, in light of the potential use of electronic communications, would be an estimated 7,176 burden hours. We also concluded that the burden hours required for compliance with Rule 15g–9, in light of the option of using electronic means of communications, would be an estimated 25,896 hours. Thus, under the amendments as they were proposed, the total aggregate burden hours for complying with the requirements of Rules 15g–2 and 15g–9, in light of the available means of communication, would be 33,072 hours (7,176 hours + 25,896 hours). We received no comments regarding these estimates. We are, therefore, utilizing them in calculating the hour burdens associated Rules 15g–2 and 15g–9, as amended.

b. Estimate of Total Annualized Paperwork Cost Burden

i. Cost Burden of Rule 15g–2

Assuming that all communications required by Rule 15g–2 are complied with in tangible form, the paperwork costs of the signature and document requirements of Rule 15g–2 would include the costs of mailing the Schedule 15G penny stock disclosure document to the customer and providing a means by which to return the signed document (such as by return postage pre-paid envelopes). Postage costs (at $0.37 each way or $0.74 for both the outgoing and prepaid incoming documents) related to providing the Schedule 15G penny stock disclosure document and receiving the signed copy from the customer, as required by the rule, would be approximately $27,706 (240 respondents × 156 new customers annually × $0.74 for each document). We estimated that the broker-dealer time required to send the document to a customer would be an average compensation rate of $24.10 per hour.[121] A broker-dealer's copying, sending, and recordkeeping hour burden under the rule, as noted above, is four minutes (1/15th of an hour). Broker-dealer time would therefore cost approximately $1.61 for each Schedule 15G provided to its customer under the rule. We concluded that the total paperwork cost burden for broker-dealer time to comply with Rule 15g–2 would be approximately $60,278 (240 respondents × 156 new customers annually × $1.61 for each document). Thus, if the mail was used for all such documents, we estimated that the total paperwork annual cost burden to the industry to comply with Rule 15g–2 would be approximately $87,984 ($27,706 for postage + $60,278 for staff time). These estimates elicited no comments and we are, therefore, utilizing them in calculating the cost burden of Rule 15g–2, as amended.

When we proposed the amendments, we recognized that the electronic communication of the Schedule 15G penny stock disclosure document would reduce the costs of compliance with Rule 15g–2. There would be no postage costs for electronically transmitted documents, and broker-dealer time for

[121] We based our estimate on the following information. A compliance clerk working in New York makes $26.33 an hour. A compliance clerk working outside New York makes $21.88 an hour. The average hourly salary of these two positions is $24.10 an hour. *See Report on Office Salaries in the Securities Industry 2002,* published by the Securities Industry Association. *See* Exchange Act Rel. No. 49037, 69 FR at 2546 n. 114. We used the same rate to estimate recordkeeping staff costs for compliance with Rule 15g–9.

e-mailing the disclosure document to the customer may be reduced (*e.g.*, the broker-dealer respondent may take only one minute, instead of the estimated burden of two minutes, to provide the penny stock disclosure document by e-mail to its customer). Recordkeeping costs would likely remain the same. We stated that if all of the respondents estimated above send the Schedule 15G penny stock disclosure document electronically, the total ongoing burden on broker-dealers would decrease from four minutes to three minutes per document disseminated, for an aggregate total of 112,320 minutes (240 respondents × 156 responses × 3 minutes for each response) or 1,872 hours. We determined that, at a broker-dealer time rate of $24.10 per hour, total staff costs for compliance with the rule if all communication is electronic would be $45,115 (1,872 hours × $24.10/hour). Thus, we concluded that if all broker-dealer respondents would obtain and send the documents required under the rules electronically, the total annual paperwork cost burden to the industry to comply with Rule 15g–2 would be approximately $45,115 ($0.00 postage + $45,115 staff time). We received no comments regarding these estimates. We are, therefore, utilizing them in calculating the cost burden of Rule 15g–2, as amended.

We stated that the broker-dealer respondent would incur additional postage costs under the proposed amendments to Rules 15g–2 and 15g–9 when its customer requested a paper copy of the information found on the Commission's Web site regarding microcap securities, including penny stocks. As discussed above, we concluded that such a request would be made, at most, in only a quarter of first-time penny stock transactions. Because there will be no return postage, each such request would result in a postage cost to the broker-dealer of $0.37. Thus, we determined that the aggregate annual postage cost for mailing documents containing the additional information will be $3,463 (240 respondents × 39 new customers annually × $0.37). We received no comments regarding this estimate. We are, therefore, utilizing it to calculate the cost burden associated with Rule 15g–2, as amended.

In proposing the rule amendments, we acknowledged that we could not estimate how many broker-dealers and customers would choose to communicate electronically. We stated that if we assumed that 50 percent of broker-dealer respondents would continue to provide documents and obtain signatures in tangible form, and 50 percent of the customer respondents would choose to communicate electronically in satisfaction of the requirements of the rule, the total aggregate cost burden to the industry to comply with amended Rule 15g–2 would be approximately $70,013 (($87,984 aggregate cost for documents and signatures in tangible form under the current rule × 0.50 of the respondents = $43,992) + ($45,115 aggregate cost burden for electronically signed and transmitted documents × 0.50 of the respondents = $22,558) + ($3,463 in postage for customers requesting tangible copies of the additional information on microcap and penny stocks on the Commission's Web site)). We received no comments regarding the estimated cost burden of Rule 15g–2. We are, therefore, utilizing it in calculating the cost burden of Rule 15g–2, as amended.

ii. Cost Burden of Rule 15g–9

In proposing the amendments to Rules 15g–2 and 15g–9, we stated that we believe, generally, that a registered representative of a registered broker-dealer obtains the information required by current Rule 15g–9 and makes the suitability determination. The branch operations manger of the firm and the compliance officer reviews the information before it is mailed to a customer. The Commission estimated that the average blended cost to the broker-dealer respondent for these personnel is $75 per hour,[122] and the total annualized cost for compliance with this portion of the current rule is $1,404,000 (18,720 hours × $75 per hour personnel costs). We received no comments regarding these estimates. We are, therefore, utilizing them when calculating the cost burden of Rule 15g–9, as amended.

In addition to the costs of preparing the suitability determination under the rule, broker-dealer respondents also incur the cost associated with delivering the suitability statement to its customers, and of receiving both the signed acknowledgement, as well as the transaction agreement required by the rule (such as by return postage pre-paid envelopes). Postage costs (at $0.37 for each or $0.74 for both the outgoing and prepaid incoming documents) related to providing the suitability statement and receiving the signed copy from the customer and the transaction agreement is approximately $27,706 (240 respondents × 156 new customers annually × $0.74 for each document). We received no comments regarding these estimates. We are, therefore, utilizing them in calculating the final cost burden of Rule 15g–9, as amended.

In addition, we estimated that broker-dealer respondents would incur a recordkeeping burden under current Rule 15g–9 of approximately two minutes per response. As noted above, the aggregate recordkeeping burden for compliance with Rule 15g–9 is 1,248 hours. Using a $24.10 per hour average for recordkeeping staff time, the aggregate annual recordkeeping broker-dealer burden associated with Rule 15g–9 is $30,077 (1,248 hours × $24.10 per hour staff costs). Thus, if only communications in tangible form are used, the total aggregate annual cost burden to broker-dealer respondent under Rule 15g–9 is approximately $1,461,783 ($1,404,000 staff costs to prepare and send the suitability statement and the transaction agreement + $27,706 postage + $30,077 record keeping personnel costs). We received no comments regarding these estimates. We are, therefore, utilizing them in our calculation of the final cost burden of Rule 15g–9, as amended.

In the proposing release, we acknowledged that the cost burden under Rule 15g–9 may be reduced when the suitability statement and transaction agreement required under the rule are communicated between the broker-dealer and the customer through electronic means. If each of the customer respondents estimated above communicates with his or her broker-dealer electronically, the costs of postage for delivery of the required documents would be $0.00. We stated that we did not believe that the personnel cost burden on broker-dealer respondents and their personnel in obtaining, reviewing, and processing the suitability determination would change through use of electronic communications. In addition, we stated that we did not believe that, based on the information available, recordkeeping burdens under Rule 15g–9 would change if the required documents were sent or received through means of electronic communication. Thus, we concluded that if all broker-dealer respondents were to obtain and send the documents required under Rule 15g–9 electronically, the aggregate annual cost burden associated with Rule 15g–9 would be approximately $1,434,077

[122] Branch Operations Managers in New York City make $99.60 an hour, including overhead. Compliance managers working in New York City make $111.75 an hour, including overhead. A senior branch operations supervisor outside of New York City makes $37.05 an hour, including overhead. While a compliance manager outside New York City makes $52/hour, including overhead. Hence, the blended rate of these four positions is approximately $75 an hour. *See Report On Management & Professional Earnings In The Securities Industry 2002. See also* Exchange Act Rel No. 49037, 69 FR at 2546 n. 115.

($14,040,000 staff costs relating to the suitability statement and agreement + $0.00 postage costs + $30,077 record keeping personnel costs). We received no comments regarding these estimates. We are, therefore, utilizing them in our calculation of the cost burden of Rule 15g–9, as amended.

We acknowledged that we cannot estimate how many broker-dealers and customers would choose to communicate electronically. We stated that if we assume that 50 percent of respondents would continue to provide documents and obtain signatures in tangible form, and 50 percent would choose to communicate electronically in satisfaction of the requirements of Rule 15g–9, the total aggregate paperwork cost burden to the industry to comply with amended Rule 15g–9 would be approximately $1,447,930 (($1,461,783 aggregate cost burden for documents and signatures in tangible form × 0.50 of the respondents = $730,891) + ($1,434,077 aggregate cost burden for electronically signed and transmitted documents × 0.50 of the respondents = $717,039)). We received no comments regarding the estimated cost burden of Rule 15g–9. We are therefore utilizing this estimate in our final calculation of the cost burden associated with Rule 15g–9, as amended.

iii. Aggregate Cost Burden for the Rule Amendments

When we proposed the amendments, we stated that the annual paperwork cost burden required for compliance with amended Rule 15g–2, in light of the available means of communication, would be an estimated $70,013. We also stated that the annual cost burden required for compliance with amended Rule 15g–9, in light of the available means of communication, would be an estimated $1,447,930. Thus, we concluded that the estimated total aggregate cost burden for complying with the proposed amendments to Rules 15g–2 and 15g–9, in light of the available means of communication, would be $1,517,943 ($70,013 for Rule 15g–2 + $1,447,930 for Rule 15g–9). We received no comments regarding these estimates.

We noted at that time that the amendments may not significantly alter the current burden on broker-dealers engaged in penny stock transactions because broker-dealers must provide the required documents to their customers and obtain from their customers the requisite documents and signatures, regardless of whether they communicate with their customers electronically or by more traditional means.

We also noted that, for purposes of the PRA, the annual reporting and recordkeeping cost burden must exclude the cost of hour burden.[123] Therefore, we determined that the reported annual cost burden required for compliance with amended Rules 15g–2 and 15g–9 would include only the postage costs detailed above, and would exclude costs for broker-dealer staff. We again assumed that 50 percent of respondents would use electronic means to comply with the amended rule, and 50 percent of respondents would use traditional means of communication. Hence, we determined that the estimated cost burden for compliance with amended Rule 15g–2 would be approximately $17,316 (($27,706 for postage × .50 of the respondents) + ($3,463 for postage for those customers requesting a tangible copy of the information on the Commission's Web site regarding microcap securities, including penny stocks)), and the estimated cost burden for compliance with amended Rule 15g–9 would also be estimated at $13,853 ($27,706 for postage × .50 of respondents). Although we solicited comments, we received no response from commenters regarding these estimates. We are, therefore, utilizing them in calculating the aggregate paperwork cost burden for amended Rules 15g–2 and 15g–9.

iv. General Information About the Collection of Information

We pointed out in the proposing release that any collection of information pursuant to Rules 15g–2 and 15g–9 is mandatory. We also stated that for all non-exempt transactions in penny stocks, broker-dealers must provide the Schedule 15G penny stock disclosure document required under Rule 15g–2, and the suitability determination required under Rule 15g–9 to their customers. Broker-dealers must maintain a copy of the customer's acknowledgement for at least three years following the date on which the penny stock disclosure document and the suitability determination were provided to the customer. During the first two years of this period, these documents must be maintained in an easily accessible place.[124] The information collected and maintained by broker-dealers pursuant to the proposed rule amendments may be reviewed during the course of an examination by the Commission or the SROs for compliance with the provisions of the federal securities laws and applicable SRO rules. The Commission and SROs would obtain possession of the information only upon request.

VII. Costs and Benefits of Rule Amendments

We solicited comments relating to the costs and benefits associated with the proposed rule amendments. We explicitly requested that commenters provide supporting empirical data for any positions advanced. We particularly sought comment on whether, and to what extent, the rule amendments would impose costs in addition to those already imposed under the current rules.

Only one commenter directly addressed the costs and benefits of these rule amendments,[125] stating that he believed costs associated with the rule amendments would be minimal. Another commenter complained about the costs of the two-day waiting period imposed by the proposed amendments to Rules 15g–2 and 15g–9.[126] We discuss these comments below in section B.

The Commission is sensitive to the costs and benefits that result from its rules. We have identified certain costs and benefits associated with the rule amendments.

A. Rule 3a51–1

In proposing the amendments to Rule 3a51–1, we stated that the costs of the proposed amendments should be minimal. As noted above, the only comment we received on this issue supported this view. We believe that the amendments will have only a limited impact on the penny stock market. For example, the amendments to the current exclusions from the definition of penny stock for reported securities, and for certain other exchange-registered securities, require that these securities also satisfy one of the following new standards. First, an exchange-registered security could qualify for an exclusion if the exchange on which it is registered has been continuously registered since the Commission initially adopted the penny stock rules, and if the exchange has maintained and continues to maintain quantitative listing standards substantially similar to those in place on January 8, 2004. Second, an exchange-registered security or a reported security

[123] *See* OMB Form 83–1, Instructions to Item 14.

[124] *See* Rule 15g–2(b) and Rule 17a–4 [17 CFR 240.17a–4].

[125] *See* Stoecklein letter, *supra* at n. 40 ("As we understand your proposals and the cost analysis, we believe that the costs associated with the proposed amendments would be minimal. In addition, the electronic transmission and storage of the information would minimize the burden further. We are assuming that the maintenance of these documents could, and most likely would occur, electronically.").

[126] *See* Beloyan letter, *supra* at n. 69.

listed on an automated quotation system sponsored by a registered national securities association such as Nasdaq could qualify for an exclusion if the exchange or the automated quotation system on which it is registered or listed has quantitative listing standards that meet or exceed standards modeled on those currently required for inclusion on the Nasdaq SmallCap Market. As we noted in proposing these amendments, they are wholly prospective and are not intended to change the status quo. Securities currently listed and traded on national securities exchanges and on Nasdaq would be ''grandfathered.'' Moreover, we noted that all national securities exchanges have initial listing and continued listing standards,[127] which have been reviewed and approved by the Commission.[128] Any cost associated with the new rule amendments should be fairly minimal because the listing standards in the amendments have been patterned after those currently used by the Nasdaq SmallCap Market. Thus, all securities now traded on Nasdaq, both National Market System securities and Nasdaq SmallCap securities, should meet the new listing standards.

Moreover, we noted that the amendments will benefit both the securities markets and the investing public. Investors will benefit because the revised definition of penny stock will better ensure that they receive the extra protection of the penny stock rules when needed. We stated that the amendments to the rule will prevent securities that have all the risky characteristics of penny stocks from being excluded from the definition of penny stock. We acknowledged, however, that these benefits are difficult to quantify.

We also noted that the amendments will reduce duplicative regulation with respect to security futures products and will also enhance legal certainty by deleting outdated and possibly confusing sections of the rule. We concluded that given the incremental change to the costs associated with the rule, the benefits of the amendments to Rule 3a51–1 will justify the costs. We received no comment or information that has caused us to alter this conclusion.

B. Rules 15g–2 and 15g–9

In proposing the amendments to Rules 15g–2 and 15g–9, we stated that we did not expect to impose any new regulatory costs on broker-dealers. One commenter disagreed, expressing concern that imposing a uniform two-day waiting period on those broker-dealers making markets in penny stocks, and soliciting unsophisticated investors to engage in penny stock transactions, impose a cost on full service broker-dealers.[129] In contrast, another commenter supported our analysis regarding the costs of these amendments, stating that the electronic transmission and storage of the documents required by these rules would reduce the costs of complying with them.[130]

We disagree that the imposition of a uniform, two-day waiting period will impose additional costs on broker-dealers. The amendments merely impose an explicit, rather than implicit, waiting period on broker-dealers prior to their effecting a penny stock transaction for a customer after receipt of a signed acknowledgement of a penny stock disclosure document, or suitability statement or agreement for a penny stock transaction. Because this uniform waiting period simply preserves the status quo by replicating the time it would take for postal delivery of the documents required by Rules 15g–2 and 15g–9, we do not believe that the rule amendments would produce any significant new costs to broker-dealers.

This commenter also points out that there may be lost opportunity costs due to the imposition of an explicit two-business-day waiting period for transactions recommended by a market-making penny stock broker-dealer that communicates electronically with its customers. We believe, however, that the effect of the waiting periods set forth above on investors would be minimal in light of the fact that the scope of the rules is quite narrow. As noted above, the application of the requirements in Rule 15g–2 and 15g–9 is limited to broker-dealers that actively solicit transactions in penny stocks. For example, only those transactions recommended by a market-making broker-dealer in penny stocks are subject to the rules. In addition, the requirements of Rule 15g–9 do not apply to recommended transactions with ''established customers'' as defined in the rule. On the other hand, providing and receiving the required customer protection documents under the rules through electronic means may save those penny stock broker-dealers subject to the rules the out-of-pocket costs of postage or other delivery methods.

We also observed that failure to adopt rule amendments that address electronic communications could ultimately foster an increase in high-pressure sales tactics by some penny stock dealers through electronic means, leading to potential investor losses. If the market for penny stocks once again becomes characterized by abusive and fraudulent sales practices, investment in the stocks of legitimate penny stock issuers could diminish. Any costs associated with the amendments to the Rules 15g–2 and 15g–9 are justified by the benefits of reducing fraud.[131] In light of the fact that the only comment we received on this issue supports the analysis set forth in the proposing release, our analysis remains unchanged.

C. Rule 15g–100

In proposing the amendments to Rule 15g–100, we stated the costs of the proposed amendments should be minimal. The changes will have only a limited impact on those broker-dealers making markets in penny stocks because of the narrow circumstances in which the penny stock disclosure document is required. The revisions to this document will not affect the frequency with which it is sent to customers. In addition, these changes should help reduce fraud by making the document more accessible and understandable to investors.

We requested comment on the costs and benefits of these changes to the penny stock disclosure document and the instructions to it set forth in Schedule 15G. We received no comments regarding the costs and/or benefits of these amendments.

[127] *See*, *e.g.*, NASD Rule 4310.

[128] Section 19(b)(1) of the Exchange Act [15 U.S.C. 78s(b)(1)].

[129] *See* Beloyan letter, *supra* at n. 69 (''As a full service broker/dealer we have to compete with the internet discount broker dealers, which most investors have. If I recommend something to my client, then get an order and have to wait 2 days, it is not feasible as it first of all is not giving the client a best execution. I can see it now, you call a client to buy something that is defined as a penny stock and get an order for $5000.00 and then tell the client he has to wait 2 business days before you can buy it for him, and the stock goes up to where his $5000.00 would be worth $7,000.00 to $10,000.00 and now the client is upset and never does business with you again, or he goes to his internet account and uses your idea to buy the stock as an unsolicited order and gets immediate execution. This takes away a full service broker dealer right [sic] to recommend and find small companies that could prove very lucrative as an investment. In addition the client could even start a lawsuit/arbitration against the broker/dealer.'').

[130] *See* Stoecklein letter, *supra* at n. 40.

[131] When it adopted Rule 15g–9, the Commission stated, ''[W]e continue to believe that any additional costs imposed by the Rule are outweighed by the benefits of reducing fraud through more effective regulation of the sales practices of broker-dealers active in the market for penny stocks.'' Exchange Act Rel. No. 27160, 54 FR at 35480–81.

VIII. Consideration of Burden on Promotion of Efficiency, Competition, and Capital Formation

We solicited comments on the effect of the proposed amendments on competition, efficiency, and capital formation. For purposes of the Small Business Regulatory Enforcement Fairness Act of 1996,[132] the Commission also requested information regarding the potential effect of the proposals on the U.S. economy on an annual basis. Commenters were invited to provide empirical data to support their views.

We received two comments regarding these issues.[133] One commenter concurred with our analysis that the amendments will promote efficiency, competition, and capital formation by providing general protections for investors and by increasing investor confidence and involvement in the securities of small businesses.[134] One market commented that the proposed amendments to Rule 3a51–1 would ''thwart'' the stated goals of Congress and the Commission to foster competition since some markets would have a built-in advantage memorialized in Commission regulation.[135] Another commenter indicated that the proposed amendments to Rules 15g–2 and 15g–9 would burden full-service broker-dealers in competing with Internet broker-dealers.[136]

Section 3(f) of the Exchange Act requires the Commission, when engaging in rulemaking, to consider or determine whether an action is necessary or appropriate in the public interest, and whether the action would promote efficiency, competition and capital formation.[137] Section 23(a)(2) of the Exchange Act requires the Commission to consider the anticompetitive effects of any rules that we adopt under the Exchange Act.[138] Section 23(a)(2) further prohibits the Commission from adopting any rules that would impose a burden on competition not necessary or appropriate in furtherance of the purposes of the Exchange Act. We believe that the amendments to Rules 3a51–1, 15g–2 and 15g–9, and 15g–100 are consistent with the public interest and will promote efficiency, competition, and capital formation by providing greater protections for investors, thus increasing investor confidence and investment in the securities of small businesses.[139]

We do not believe that the amendments that the Commission is adopting to Rules 3a51–1, 15g–2, 15g–9, and 15g–100 will result in any burden on competition that is not necessary or appropriate in furtherance of the purposes of the Exchange Act. We disagree that the amendments to Rule 3a51–1 could harm competition between markets. We continue to view these amendments as essentially neutral. They should preserve—not change—the status quo with respect to the registered national securities exchanges and Nasdaq. The amendments are not designed to change the listing standards of Nasdaq and ''grandfathered'' exchanges, and should not encourage or facilitate regulatory arbitrage.

While the amendments conceivably could impose some competitive burdens on wholly new markets, wholly new facilities or ''junior tiers'' of markets, such potential competitive burdens are more than outweighed by the benefits of the proposed amendments. Amendments to Rule 3a51–1 would prevent those securities that have all the risky characteristics of penny stocks from being excluded from the definition of penny stock. As a result, investors buying and purchasing these securities will continue to receive the increased protection that Congress intended they receive under the Penny Stock Reform Act. In addition, the amendments to Rule 3a51–1 will promote capital formation by encouraging investment because of increased investor confidence and will apply equally to all broker-dealers making markets in penny stocks.

The other changes to Rule 3a51–1 will encourage efficiency by updating the definition of penny stock. For example, Rule 3a51–1 will exclude security futures products from this definition.

With regard to the amendment to Rules 15g–2 and 15–9, we do not believe that the explicit waiting periods imposed under these amendments will increase the existing burdens under the penny stock rules. Indeed, with respect to communications sent through the mail, the rules already effectively impose a similar waiting period. As discussed above, prospective investors in penny stocks should have the opportunity to carefully consider, outside of a high-pressure environment, whether an investment in penny stocks is appropriate for them. The amendments will ensure that all investors in penny stocks, whether they communicate through traditional means or electronically, will retain the opportunity for careful consideration.

We do not believe that the amendments to Rules 15g–2 and 15g–9 will adversely affect capital formation. One commenter indicated that the amendments may hinder capital formation.[140] However, as the Commission stated when it first adopted the penny stock rules and when it proposed the amendments, without these rules, sales practice abuses in the market may lead investors to bypass the penny stock market in favor of other types of securities. By operating to curb sales practice abuses in the markets for penny stocks, the rule amendments will continue to benefit legitimate penny stock issuers and the broker-dealers making markets in those issuers' securities. Moreover, because these rule amendments will only apply to broker-dealers soliciting customers for recommended transactions in penny stocks in which they make a market (along with the other exceptions to the rules), any potential adverse effect on efficiency, competition, or capital formation will be limited.

Similarly, we do not believe that the waiting period that would be imposed by the proposed amendments to Rules 15g–2 and 15g–9 will result in any burden on competition that is not necessary or appropriate in furtherance of the purposes of the Exchange Act. As noted above, one commenter asserted that the proposed amendments to these rules would harm competition between full service broker-dealers and Internet-based broker-dealers.[141] We disagree. The amendments to Rules 15g–2 and 15g–9 merely impose an explicit, rather than implicit, waiting period on broker-dealers prior to their effecting a penny stock transaction for a customer after

[132] Pub. L. 104–21, Title II, 110 Stat. 857 (1996).

[133] *See* Stoecklein letter, *supra* at n. 40.

[134] *Id.* (''In conclusion, we concur with the staff's opinion that the proposed amendments are consistent with the public interest and would promote efficiency, competition and capital formation by providing greater protections for investors, thus increasing investor confidence and involvement in the securities of small businesses.'').

[135] *See* Nasdaq letter, *supra* at n. 16.

[136] *See* Beloyan letter, *supra* at n. 69.

[137] 15 U.S.C. 78c(f).

[138] 15 U.S.C. 78w(a)(2).

[139] *See* Exchange Act Rel. No. 30608, 57 FR at 18007 (''[T]he Commission also recognizes that fraudulent sales practices, which have occurred disproportionately in this market, may themselves hinder economic growth, because they cause the loss of the productive use of investor funds, and discourage further investment by those who have been defrauded. Legitimate small business is thus harmed by the diversion of substantial capital to unscrupulous promoters and broker-dealers. Moreover, the issuers of penny stocks that are fraudulently traded may themselves be victimized by this activity.'').

[140] *See* Beloyan letter, *supra* at n. 69 (''How can venture capital and new ideas with small public companies exist and grow with more restrictions? Doesn't putting more government into what is already here, which by the way seems to be working fine, significantly curbed [sic] growth in our economy?'').

[141] *Id.*

receipt of a signed acknowledgement of a penny stock disclosure document, or suitability statement or agreement for a penny stock transaction. Because this uniform waiting period simply preserves the status quo by replicating the time it would take for postal delivery of the required disclosure documents, we do not believe that the rule amendments will impose any additional competitive burdens on penny stock brokers and dealers. We believe the amendments will instead promote competition by redesigning this necessary regulatory scheme to permit broker-dealers and investors to take advantage of rapidly evolving technology.

Finally, we believe that the changes we are proposing to the penny stock disclosure document, as set forth in Schedule 15G, will not impose any burden on competition. On the contrary, by streamlining the document, making it more readable, and generally adapting it to electronic media, the penny stock disclosure document will promote efficiency, competition, and capital formation.

IX. Final Regulatory Flexibility Analysis

The Commission has certified, pursuant to 5 U.S.C. 605(b) that the amendments to Rules 3a51–1, 15g–2 and 15g–9, and 15g–100 will not have a significant economic impact on a substantial number of small entities. This certification was incorporated into the release proposing these amendments. The Commission received no comments about the impact on small entities or the Regulatory Flexibility Act certification.

X. Statutory Authority

The Commission is adopting amendments to §§ 240.3a51–1, 240.15g–2, 240.15g–9 and 240.15g–100 of Title 17, Chapter II of the Code of Federal Regulations pursuant to authority set forth in Sections 3(a)(51)(B), 3(b), 15(c), 15(g) and 23(a) of the Exchange Act [15 U.S.C. 78c(a)(51)(B), 78c(b), 78o(c), 78o(g), and 78w(a)].

Text of Rule Amendments

List of Subjects in 17 CFR Part 240

Broker-dealers, Reporting and recordkeeping requirements, Securities.

■ For the reasons set forth in the preamble, Title 17, Chapter II of the Code of Federal Regulations is amended as follows:

PART 240—GENERAL RULES AND REGULATIONS, SECURITIES EXCHANGE ACT OF 1934

■ 1. The authority citation for part 240 continues to read, in part, as follows:

Authority: 15 U.S.C. 77c, 77d, 77g, 77j, 77s, 77z–2, 77z–3, 77eee, 77ggg, 77nnn, 77sss, 77ttt, 78c, 78d, 78e, 78f, 78g, 78i, 78j, 78j–1, 78k, 78k–1, 78*l*, 78m, 78n, 78o, 78p, 78q, 78s, 78u–5, 78w, 78x, 78*ll*, 78mm, 79q, 79t, 80a–20, 80a–23, 80a–29, 80a–37, 80b–3, 80b–4, 80b–11, and 7201 *et seq.*; and 18 U.S.C. 1350, unless otherwise noted.

* * * * *

■ 2. Section 240.3a51–1 is amended by revising paragraphs (a), (e) and (f) to read as follows:

§ 240.3a51–1 Definition of ''penny stock''.

* * * * *

(a) That is a reported security, as defined in § 240.11Aa3–1(a), provided that:

(1) The security is registered, or approved for registration upon notice of issuance, on a national securities exchange that has been continuously registered as a national securities exchange since April 20, 1992 (the date of the adoption of Rule 3a51–1 (§ 240.3a51–1) by the Commission); and the national securities exchange has maintained quantitative listing standards that are substantially similar to or stricter than those listing standards that were in place on that exchange on January 8, 2004; or

(2) The security is registered, or approved for registration upon notice of issuance, on a national securities exchange, or is listed, or approved for listing upon notice of issuance on, an automated quotation system sponsored by a registered national securities association, that:

(i) Has established initial listing standards that meet or exceed the following criteria:

(A) The issuer shall have:

(1) Stockholders' equity of $5,000,000;

(2) Market value of listed securities of $50 million for 90 consecutive days prior to applying for the listing (market value means the closing bid price multiplied by the number of securities listed); or

(3) Net income of $750,000 (excluding extraordinary or non-recurring items) in the most recently completed fiscal year or in two of the last three most recently completed fiscal years;

(B) The issuer shall have an operating history of at least one year or a market value of listed securities of $50 million (market value means the closing bid price multiplied by the number of securities listed);

(C) The issuer's stock, common or preferred, shall have a minimum bid price of $4 per share;

(D) In the case of common stock, there shall be at least 300 round lot holders of the security (a round lot holder means a holder of a normal unit of trading);

(E) In the case of common stock, there shall be at least 1,000,000 publicly held shares and such shares shall have a market value of at least $5 million (market value means the closing bid price multiplied by number of publicly held shares, and shares held directly or indirectly by an officer or director of the issuer and by any person who is the beneficial owner of more than 10 percent of the total shares outstanding are not considered to be publicly held);

(F) In the case of a convertible debt security, there shall be a principal amount outstanding of at least $10 million;

(G) In the case of rights and warrants, there shall be at least 100,000 issued and the underlying security shall be registered on a national securities exchange or listed on an automated quotation system sponsored by a registered national securities association and shall satisfy the requirements of paragraph (a) or (e) of this section;

(H) In the case of put warrants (that is, instruments that grant the holder the right to sell to the issuing company a specified number of shares of the company's common stock, at a specified price until a specified period of time), there shall be at least 100,000 issued and the underlying security shall be registered on a national securities exchange or listed on an automated quotation system sponsored by a registered national securities association and shall satisfy the requirements of paragraph (a) or (e) of this section;

(I) In the case of units (that is, two or more securities traded together), all component parts shall be registered on a national securities exchange or listed on an automated quotation system sponsored by a registered national securities association and shall satisfy the requirements of paragraph (a) or (e) of this section; and

(J) In the case of equity securities (other than common and preferred stock, convertible debt securities, rights and warrants, put warrants, or units), including hybrid products and derivative securities products, the national securities exchange or registered national securities association shall establish quantitative listing standards that are substantially similar to those found in paragraphs (a)(2)(i)(A) through (a)(2)(i)(I) of this section; and

(ii) Has established quantitative continued listing standards that are reasonably related to the initial listing standards set forth in paragraph (a)(2)(i) of this section, and that are consistent with the maintenance of fair and orderly markets;

* * * * *

(e)(1) That is registered, or approved for registration upon notice of issuance, on a national securities exchange that makes transaction reports available pursuant to § 240.11Aa3–1, provided that:

(i) Price and volume information with respect to transactions in that security is required to be reported on a current and continuing basis and is made available to vendors of market information pursuant to the rules of the national securities exchange;

(ii) The security is purchased or sold in a transaction that is effected on or through the facilities of the national securities exchange, or that is part of the distribution of the security; and

(iii) The security satisfies the requirements of paragraph (a)(1) or (a)(2) of this section;

(2) A security that satisfies the requirements of this paragraph (e), but does not otherwise satisfy the requirements of paragraph (a), (b), (c), (d), (f), or (g) of this section, shall be a penny stock for purposes of section 15(b)(6) of the Act (15 U.S.C. 78o(b)(6));

(f) That is a security futures product listed on a national securities exchange or an automated quotation system sponsored by a registered national securities association; or

* * * * *

■ 3. Section 240.15g–2 is amended by:
■ (a) Revising the section heading;
■ (b) Revising paragraph (a);
■ (c) Redesignating paragraph (b) as paragraph (c);
■ (d) Adding new paragraph (b); and
■ (e) Adding paragraph (d).

The revisions and additions read as follows:

§ 240.15g–2 Penny stock disclosure document relating to the penny stock market.

(a) It shall be unlawful for a broker or dealer to effect a transaction in any penny stock for or with the account of a customer unless, prior to effecting such transaction, the broker or dealer has furnished to the customer a document containing the information set forth in Schedule 15G, § 240.15g–100, and has obtained from the customer a signed and dated acknowledgment of receipt of the document.

(b) Regardless of the form of acknowledgment used to satisfy the requirements of paragraph (a) of this section, it shall be unlawful for a broker or dealer to effect a transaction in any penny stock for or with the account of a customer less than two business days after the broker or dealer sends such document.

* * * * *

(d) Upon request of the customer, the broker or dealer shall furnish the customer with a copy of the information set forth on the Commission's Web site at *http://www.sec.gov/investor/pubs/microcapstock.htm.*

■ 4. Section 240.15g–9 is amended by revising paragraphs (a)(2)(ii) and (b)(4) to read as follows:

§ 240.15g–9 Sales practice requirements for certain low-priced securities.

(a) * * *

(2) * * *

(ii)(A) The broker or dealer has received from the person an agreement to the transaction setting forth the identity and quantity of the penny stock to be purchased; and

(B) Regardless of the form of agreement used to satisfy the requirements of paragraph (a)(2)(ii)(A) of this section, it shall be unlawful for such broker or dealer to sell a penny stock to, or to effect the purchase of a penny stock by, for or with the account of a customer less than two business days after the broker or dealer sends such agreement.

(b) * * *

(4)(i) Obtain from the person a signed and dated copy of the statement required by paragraph (b)(3) of this section; and

(ii) Regardless of the form of statement used to satisfy the requirements of paragraph (b)(4)(i) of this section, it shall be unlawful for such broker or dealer to sell a penny stock to, or to effect the purchase of a penny stock by, for or with the account of a customer less than two business days after the broker or dealer sends such statement.

* * * * *

■ 5. Section 240.15g–100 is revised to read as follows:

§ 240.15g–100 Schedule 15G—Information to be included in the document distributed pursuant to 17 CFR 240.15g–2.

SECURITIES AND EXCHANGE COMMISSION

Washington, DC 20549

SCHEDULE 15G

Under the Securities Exchange Act of 1934

Instructions to Schedule 15G

A. Schedule 15G (Schedule) may be provided to customers in its entirety either on paper or electronically. It may also be provided to customers electronically through a link to the SEC's Web site.

1. *If the Schedule is sent in paper form*, the format and typeface of the Schedule must be reproduced exactly as presented. For example, words that are capitalized must remain capitalized, and words that are underlined or bold must remain underlined or bold. The typeface must be clear and easy to read. The Schedule may be reproduced either by photocopy or by printing.

2. *If the Schedule is sent electronically*, the e-mail containing the Schedule must have as a subject line ''Important Information on Penny Stocks.'' The Schedule reproduced in the text of the e-mail must be clear, easy-to-read type presented in a manner reasonably calculated to draw the customer's attention to the language in the document, especially words that are capitalized, underlined or in bold.

3. *If the Schedule is sent electronically using a hyperlink to the SEC Web site*, the e-mail containing the hyperlink must have as a subject line: ''Important Information on Penny Stocks.'' Immediately before the hyperlink, the text of the e-mail must reproduce the following statement in clear, easy-to-read type presented in a manner reasonably calculated to draw the customer's attention to the words: ''We are required by the U.S. Securities and Exchange Commission to give you the following disclosure statement: *http://www.sec.gov/investor/schedule15g.htm.* It explains some of the risks of investing in penny stocks. Please read it carefully before you agree to purchase or sell a penny stock.''

B. Regardless of how the Schedule is provided to the customer, the communication must also provide the name, address, telephone number and e-mail address of the broker. E-mail messages may also include any privacy or confidentiality information that the broker routinely includes in e-mail messages sent to customers. No other information may be included in these

communications, other than instructions on how to provide a signed and dated acknowledgement of receipt of the Schedule.

C. The document entitled ''Important Information on Penny Stocks'' must be distributed as Schedule 15G and must be no more than two pages in length if provided in paper form.

D. The disclosures made through the Schedule are in addition to any other disclosures that are required under the Federal securities laws.

E. Recipients of the document must not be charged any fee for the document.

F. The content of the Schedule is as follows:

[next page]

Important Information on Penny Stocks

The U.S. Securities and Exchange Commission (SEC) requires your broker to give this statement to you, and to obtain your signature to show that you have received it, before your first trade in a penny stock. This statement contains important information—and you should read it carefully before you sign it, and before you decide to purchase or sell a penny stock.

In addition to obtaining your signature, the SEC requires your broker to wait at least two business days after sending you this statement before executing your first trade to give you time to carefully consider your trade.

Penny Stocks Can Be Very Risky

Penny stocks are low-priced shares of small companies. Penny stocks may trade infrequently—which means that it may be difficult to sell penny stock shares once you have them. Because it may also be difficult to find quotations for penny stocks, they may be impossible to accurately price. Investors in penny stock should be prepared for the possibility that they may lose their whole investment.

While penny stocks generally trade over-the-counter, they may also trade on U.S. securities exchanges, facilities of U.S. exchanges, or foreign exchanges. You should learn about the market in which the penny stock trades to determine how much demand there is for this stock and how difficult it will be to sell. Be especially careful if your broker is offering to sell you newly issued penny stock that has no established trading market.

The securities you are considering have not been approved or disapproved by the SEC. Moreover, the SEC has not passed upon the fairness or the merits of this transaction nor upon the accuracy or adequacy of the information contained in any prospectus or any other information provided by an issuer or a broker or dealer.

Information You Should Get

In addition to this statement, your broker is required to give you a statement of your financial situation and investment goals explaining why his or her firm has determined that penny stocks are a suitable investment for you. In addition, your broker is required to obtain your agreement to the proposed penny stock transaction.

Before you buy penny stock, Federal law requires your salesperson to tell you the ''*offer*'' and the ''*bid*'' on the stock, and the ''*compensation*'' the salesperson and the firm receive for the trade. The firm also must send a confirmation of these prices to you after the trade. You will need this price information to determine what profit or loss, if any, you will have when you sell your stock.

The offer price is the wholesale price at which the dealer is willing to sell stock to other dealers. The bid price is the wholesale price at which the dealer is willing to buy the stock from other dealers. In its trade with you, the dealer may add a retail charge to these wholesale prices as compensation (called a ''markup'' or ''markdown'').

The difference between the bid and the offer price is the dealer's ''*spread.*'' A spread that is large compared with the purchase price can make a resale of a stock very costly. To be profitable when you sell, the bid price of your stock must rise above the amount of this spread and the compensation charged by both your selling and purchasing dealers. *Remember that if the dealer has no bid price, you may not be able to sell the stock after you buy it, and may lose your whole investment.*

After you buy penny stock, your brokerage firm must send you a monthly account statement that gives an estimate of the value of each penny stock in your account, if there is enough information to make an estimate. If the firm has not bought or sold any penny stocks for your account for six months, it can provide these statements every three months.

Additional information about low-priced securities—including penny stocks—is available on the SEC's Web site at *http://www.sec.gov/investor/pubs/microcapstock.htm.* In addition, your broker will send you a copy of this information upon request. The SEC encourages you to learn all you can before making this investment.

Brokers' Duties and Customers' Rights and Remedies

Remember that your salesperson is not an impartial advisor—he or she is being paid to sell you stock. Do not rely only on the salesperson, but seek outside advice before you buy any stock. You can get the disciplinary history of a salesperson or firm from NASD at 1–800–289–9999 or contact NASD via the Internet at *http://www.nasd.com.* You can also get additional information from your state securities official. The North American Securities Administrators Association, Inc. can give you contact information for your state. You can reach NASAA at (202) 737–0900 or via the Internet at *http://www.nasaa.org.*

If you have problems with a salesperson, contact the firm's compliance officer. You can also contact the securities regulators listed above. Finally, if you are a victim of fraud, you may have rights and remedies under state and Federal law. In addition to the regulators listed above, you also may contact the SEC with complaints at (800) SEC–0330 or via the Internet at *help@sec.gov.*

Dated: July 7, 2005.

By the Commission.

J. Lynn Taylor,

Assistant Secretary.

[FR Doc. 05–13737 Filed 7–12–05; 8:45 am]

BILLING CODE 8010–01–P

Reader Aids

Federal Register

Vol. 70, No. 133

Wednesday, July 13, 2005

CUSTOMER SERVICE AND INFORMATION

Federal Register/Code of Federal Regulations	
General Information, indexes and other finding aids	**202–741–6000**
Laws	**741–6000**
Presidential Documents	
Executive orders and proclamations	**741–6000**
The United States Government Manual	**741–6000**
Other Services	
Electronic and on-line services (voice)	**741–6020**
Privacy Act Compilation	**741–6064**
Public Laws Update Service (numbers, dates, etc.)	**741–6043**
TTY for the deaf-and-hard-of-hearing	**741–6086**

ELECTRONIC RESEARCH

World Wide Web

Full text of the daily Federal Register, CFR and other publications is located at: **http://www.gpoaccess.gov/nara/index.html**

Federal Register information and research tools, including Public Inspection List, indexes, and links to GPO Access are located at: **http://www.archives.gov/federal__register/**

E-mail

FEDREGTOC-L (Federal Register Table of Contents LISTSERV) is an open e-mail service that provides subscribers with a digital form of the Federal Register Table of Contents. The digital form of the Federal Register Table of Contents includes HTML and PDF links to the full text of each document.

To join or leave, go to **http://listserv.access.gpo.gov** and select *Online mailing list archives, FEDREGTOC-L, Join or leave the list (or change settings);* then follow the instructions.

PENS (Public Law Electronic Notification Service) is an e-mail service that notifies subscribers of recently enacted laws.

To subscribe, go to **http://listserv.gsa.gov/archives/publaws-l.html** and select *Join or leave the list (or change settings);* then follow the instructions.

FEDREGTOC-L and **PENS** are mailing lists only. We cannot respond to specific inquiries.

Reference questions. Send questions and comments about the Federal Register system to: **fedreg.info@nara.gov**

The Federal Register staff cannot interpret specific documents or regulations.

FEDERAL REGISTER PAGES AND DATE, JULY

37985–38570 1
38571–38750 5
38751–39172 6
39173–39410 7
39411–39638 8
39639–39904 11
39905–40184 12
40185–40634 13

CFR PARTS AFFECTED DURING JULY

At the end of each month, the Office of the Federal Register publishes separately a List of CFR Sections Affected (LSA), which lists parts and sections affected by documents published since the revision date of each title.

3 CFR

Executive Orders:
12735 (See EO 13382) 38567
12938 (Amended by EO 13382).....38567
13094 (See EO 13382) 38567
13382.....38567

Administrative Orders:

Memorandums:
Memorandum of June 29, 2005 39173

Presidential Determinations:
No. 2005-26 of July 4, 2005 40181
No. 2005-27 of July 4, 2005 40183

7 CFR

983.....39905, 40185
4274.....38571

Proposed Rules:
319.....39194
868.....39199
2902.....38612

10 CFR

110.....37985
625.....39364

12 CFR

201.....39411

Proposed Rules:
Ch. VII.....39202

13 CFR

Proposed Rules:
106.....39667

14 CFR

11.....40156
21.....40166
23.....37994
25.....39908, 39910
36.....38742
39 .....38573, 38575, 38578, 38580, 38751, 38753, 38755, 39412, 39559, 39639, 39642, 39644, 39647, 39651, 39912, 40187
71 .....37997, 38740, 39175, 39914, 39915, 39916, 39917
73.....38740
91.....38742, 40168
93.....39610
97.....39652
121.....40156, 40168
125.....40168
129.....40168

Proposed Rules:
39 .....38625, 38627, 38630, 38632, 38636, 38817, 38819, 38821, 38823, 39204, 39433, 39435
71 .....38053, 38055, 38056, 38826, 39973

15 CFR

Proposed Rules:
303.....38828

16 CFR

Proposed Rules:
23.....38834

17 CFR

240.....40614
270.....39390

Proposed Rules:
36.....39672
37.....39672
38.....39672
39.....39672
40.....39672

18 CFR

35.....38757

19 CFR

Proposed Rules:
101.....38637
122.....38637

20 CFR

404.....38582

Proposed Rules:
416.....39689

21 CFR

522.....39918
556.....39918

Proposed Rules:
310.....40232
341.....40232, 40237

22 CFR

126.....39919

23 CFR

Proposed Rules:
630.....39692

26 CFR

1 .....39653, 39920, 40189
602.....39920, 40189

Proposed Rules:
1.....38057, 39695
31.....38057

27 CFR

9 .....37998, 38002, 38004

Proposed Rules:
4.....38058

28 CFR

Proposed Rules:
16 39696
45 39206

29 CFR

Proposed Rules:
1404 39209
1610 38060

30 CFR

Proposed Rules:
934 38639

31 CFR

Ch. V 38256

32 CFR

321 38009

Proposed Rules:
285 40249

33 CFR

100 ....38010, 39654, 39656
117 ....38593, 38594
165 ....38013, 38015, 39176, 39923

Proposed Rules:
100 39697
167 38061

34 CFR

230 38017

36 CFR

7 38759

37 CFR

2 38768
7 38768
201 38022
251 38022
252 38022
257 38022
258 39178
259 38022

38 CFR

Proposed Rules:
3 39213

40 CFR

51 ....39104, 39413
52 ....38023, 38025, 38028, 38029, 38774, 38776, 39658, 39926, 40193, 40195
62 39927
63 ....38554, 38780, 39426, 39662
81 38029
85 40420
86 40420
89 40420
90 40420
91 40420
92 40420
94 40420
180 ....38780, 38785, 38786, 40196, 40199, 40202
300 ....38789, 39180
372 39931
799 ....39624, 39630
1039 40420
1048 40420
1051 40420
1065 40420
1068 40420

Proposed Rules:
52 ....38064, 38068, 38071, 38073, 38837, 38839, 38840, 39974
55 38840
60 39870
62 39974
63 ....38554, 39441, 39457
81 ....38073, 39215
85 39870
89 39870
94 39870
155 40251
194 38642
300 ....38845, 39217
1039 39870
1065 39870
1068 39870

41 CFR

Proposed Rules:
51-2 38080
51-3 38080
51-4 38080

42 CFR

414 39022

Proposed Rules:
1001 38081

44 CFR

64 38038

Proposed Rules:
67 39457

45 CFR

2510 39562
2520 39562
2521 39562
2522 39562
2540 39562
2550 39562

46 CFR

Proposed Rules:
Ch. I 39699

47 CFR

1 ....38794, 38795
15 38800
20 38794
43 38794
63 38795
64 38795
73 ....39182, 40212, 40213, 40214, 40215
76 40216

Proposed Rules:
15 38845
22 40276
73 ....39217, 40277, 40278
76 38848

48 CFR

Proposed Rules:
Ch. II 39975
52 40279
204 39976
222 39978
225 39980
235 39976
249 39980
252 39976

49 CFR

209 38804
213 38804
214 38804
215 38804
216 38804
217 38804
218 38804
219 38804
220 38804
221 38804
222 38804
223 38804
225 38804
228 38804
229 38804
230 38804
231 38804
232 38804
233 38804
234 38804
235 38804
236 38804
238 38804
239 38804
240 38804
241 38804
244 38804
375 39949
571 ....38040, 39959
573 38805
575 39970
577 38805

Proposed Rules:
571 40280
572 40281

50 CFR

600 40225
622 39187
648 ....39190, 39192, 39970
660 38596,
679 ....38052, 38815, 39664, 40231

Proposed Rules:
17 ....38849, 39227, 39981
32 40108
223 ....38861, 39231
224 39231
229 40301
600 39700
660 ....40302, 40305

REMINDERS

The items in this list were editorially compiled as an aid to Federal Register users. Inclusion or exclusion from this list has no legal significance.

RULES GOING INTO EFFECT JULY 13, 2005

AGRICULTURE DEPARTMENT

Agricultural Marketing Service

Pistachios grown in—

California; published 7-12-05

ENVIRONMENTAL PROTECTION AGENCY

Air quality implementation plans; approval and promulgation; various States:

Texas; published 7-13-05

Pesticides; tolerances in food, animal feeds, and raw agricultural commodities:

Imidacloprid; published 7-13-05

Potassium triiodide; published 7-13-05

Spirodiclofen; published 7-13-05

HEALTH AND HUMAN SERVICES DEPARTMENT

Food and Drug Administration

Medical devices:

Medical device reporting; published 2-28-05

TRANSPORTATION DEPARTMENT

Federal Aviation Administration

Airworthiness directives:

Agusta S.p.A.; published 6-8-05

Dassault; published 6-8-05

TREASURY DEPARTMENT

Internal Revenue Service

Income taxes:

Section 179 elections; cost of property expense; published 7-13-05

COMMENTS DUE NEXT WEEK

AGRICULTURE DEPARTMENT

Agricultural Marketing Service

Cotton classing, testing and standards:

Classification services to growers; 2004 user fees; Open for comments until further notice; published 5-28-04 [FR 04-12138]

Milk marketing orders:

Appalachian and Southeast; comments due by 7-19-05; published 5-20-05 [FR 05-09962]

AGRICULTURE DEPARTMENT

Animal and Plant Health Inspection Service

Plant-related quarantine, foreign:

Wheat importation; flag smut-related prohibitions; proposed removal; comments due by 7-19-05; published 5-20-05 [FR 05-10094]

AGRICULTURE DEPARTMENT

Commodity Credit Corporation

Loan and purchase programs:

Extra long staple cotton; prices; comments due by 7-20-05; published 6-20-05 [FR 05-12034]

AGRICULTURE DEPARTMENT

Natural Resources Conservation Service

Reports and guidance documents; availability, etc.:

National Handbook of Conservation Practices; Open for comments until further notice; published 5-9-05 [FR 05-09150]

COMMERCE DEPARTMENT

National Oceanic and Atmospheric Administration

Fishery conservation and management:

Northeastern United States fisheries—

Emergency closure due to presence of toxin causing paralytic shellfish poisoning; comments due by 7-18-05; published 6-16-05 [FR 05-12030]

Marine mammals:

Commercial fishing authorizations; incidental taking—

Atlantic Large Whale Take Reduction Plan; comments due by 7-21-05; published 6-21-05 [FR 05-11847]

COURT SERVICES AND OFFENDER SUPERVISION AGENCY FOR THE DISTRICT OF COLUMBIA

Semi-annual agenda; Open for comments until further notice; published 12-22-03 [FR 03-25121]

DEFENSE DEPARTMENT

Acquisition regulations:

Pilot Mentor-Protege Program; Open for comments until further notice; published 12-15-04 [FR 04-27351]

EDUCATION DEPARTMENT

Grants and cooperative agreements; availability, etc.:

Vocational and adult education—

Smaller Learning Communities Program; Open for comments until further notice; published 2-25-05 [FR E5-00767]

ENERGY DEPARTMENT

Meetings:

Environmental Management Site-Specific Advisory Board—

Oak Ridge Reservation, TN; Open for comments until further notice; published 11-19-04 [FR 04-25693]

ENERGY DEPARTMENT

Energy Efficiency and Renewable Energy Office

Commercial and industrial equipment; energy efficiency program:

Test procedures and efficiency standards—

Commercial packaged boilers; Open for comments until further notice; published 10-21-04 [FR 04-17730]

ENERGY DEPARTMENT

Federal Energy Regulatory Commission

Electric rate and corporate regulation filings:

Virginia Electric & Power Co. et al.; Open for comments until further notice; published 10-1-03 [FR 03-24818]

ENVIRONMENTAL PROTECTION AGENCY

Air quality implementation plans:

Preparation, adoption and submittal—

Delaware and New Jersey; comments due by 7-19-05; published 6-28-05 [FR 05-12706]

Air quality implementation plans; approval and promulgation; various States:

Virginia; comments due by 7-20-05; published 6-20-05 [FR 05-12077]

Environmental statements; availability, etc.:

Coastal nonpoint pollution control program—

Minnesota and Texas; Open for comments until further notice; published 10-16-03 [FR 03-26087]

Pesticides; tolerances in food, animal feeds, and raw agricultural commodities:

Alternaria destruens Strain 059; comments due by 7-18-05; published 5-18-05 [FR 05-09903]

Aminopyridine, etc.; comments due by 7-18-05; published 5-18-05 [FR 05-09776]

Dimethyl ether; comments due by 7-18-05; published 5-18-05 [FR 05-09475]

Fludioxonil; comments due by 7-18-05; published 5-18-05 [FR 05-09778]

Pinene polymers; comments due by 7-18-05; published 5-18-05 [FR 05-09479]

Red cabbage color; comments due by 7-18-05; published 5-18-05 [FR 05-09482]

Superfund program:

National oil and hazardous substances contingency plan—

National priorities list update; comments due by 7-18-05; published 6-17-05 [FR 05-11827]

National priorities list update; comments due by 7-18-05; published 6-17-05 [FR 05-11828]

Water pollution control:

National Pollutant Discharge Elimination System—

Concentrated animal feeding operations in New Mexico and Oklahoma; general permit for discharges; Open for comments until further notice; published 12-7-04 [FR 04-26817]

Water pollution; effluent guidelines for point source categories:

Meat and poultry products processing facilities; Open for comments until further notice; published 9-8-04 [FR 04-12017]

FEDERAL COMMUNICATIONS COMMISSION

Committees; establishment, renewal, termination, etc.:

Technological Advisory Council; Open for comments until further notice; published 3-18-05 [FR 05-05403]

Common carrier services:
Interconnection—
Incumbent local exchange carriers unbounding obligations; local competition provisions; wireline services offering advanced telecommunications capability; Open for comments until further notice; published 12-29-04 [FR 04-28531]
Local and interexchange carriers; minimum customer account record exchange obligations; comments due by 7-18-05; published 6-1-05 [FR 05-10973]
Radio stations; table of assignments:
Georgia; comments due by 7-18-05; published 6-8-05 [FR 05-11274]

HEALTH AND HUMAN SERVICES DEPARTMENT
Centers for Medicare & Medicaid Services
Medicare:
Inpatient rehabilitation facility prospective payment system (2006 FY); update; comments due by 7-18-05; published 5-25-05 [FR 05-10264]

HEALTH AND HUMAN SERVICES DEPARTMENT
Food and Drug Administration
Food additives:
Vitamin D3; use in calcium-fortified fruit juices and juice drinks; comments due by 7-22-05; published 6-22-05 [FR 05-12322]
Food for human consumption:
Food labeling—
Shell eggs; safe handling statements; comments due by 7-19-05; published 5-5-05 [FR 05-08907]
Foodborne illness—
Sprout safety; meeting; comments due by 7-18-05; published 4-22-05 [FR 05-08103]
Reports and guidance documents; availability, etc.:
Evaluating safety of antimicrobial new animal drugs with regard to their microbiological effects on bacteria of human health concern; Open for comments until further notice; published 10-27-03 [FR 03-27113]
Medical devices—
Dental noble metal alloys and base metal alloys; Class II special controls; Open for comments until further notice; published 8-23-04 [FR 04-19179]

HOMELAND SECURITY DEPARTMENT
Coast Guard
Anchorage regulations:
Maryland; Open for comments until further notice; published 1-14-04 [FR 04-00749]

HOUSING AND URBAN DEVELOPMENT DEPARTMENT
Fair housing:
State and local fair housing enforcement agencies; certification and funding; comments due by 7-18-05; published 5-18-05 [FR 05-09830]

INTERIOR DEPARTMENT
Indian Affairs Bureau
Indian tribes, acknowledgment of existence determinations, etc.:
Western Shoshone; comments due by 7-18-05; published 5-19-05 [FR 05-09941]

INTERIOR DEPARTMENT
Fish and Wildlife Service
Endangered and threatened species permit applications
Recovery plans—
Paiute cutthroat trout; Open for comments until further notice; published 9-10-04 [FR 04-20517]
Endangered and threatened species:
Critical habitat designations—
Southwestern willow flycatcher; comments due by 7-18-05; published 7-7-05 [FR 05-13402]
Vernal pool crustaceans and plants in California and Oregon; comments due by 7-20-05; published 6-30-05 [FR 05-12963]

INTERIOR DEPARTMENT
Surface Mining Reclamation and Enforcement Office
Permanent program and abandoned mine land reclamation plan submissions:
Virginia; comments due by 7-18-05; published 6-17-05 [FR 05-11979]

MANAGEMENT AND BUDGET OFFICE
Federal Procurement Policy Office
Acquisition regulations:
Cost Accounting Standards Board—
Contract coverage; comments due by 7-22-05; published 5-23-05 [FR 05-09847]

NATIONAL CRIME PREVENTION AND PRIVACY COMPACT COUNCIL
National Fingerprint File Program:
Qualification requirements; comments due by 7-22-05; published 6-22-05 [FR 05-12330]

NUCLEAR REGULATORY COMMISSION
Environmental statements; availability, etc.:
Fort Wayne State Developmental Center; Open for comments until further notice; published 5-10-04 [FR 04-10516]

SMALL BUSINESS ADMINISTRATION
Disaster loan areas:
Maine; Open for comments until further notice; published 2-17-04 [FR 04-03374]

OFFICE OF UNITED STATES TRADE REPRESENTATIVE
Trade Representative, Office of United States
Generalized System of Preferences:
2003 Annual Product Review, 2002 Annual Country Practices Review, and previously deferred product decisions; petitions disposition; Open for comments until further notice; published 7-6-04 [FR 04-15361]

TRANSPORTATION DEPARTMENT
Economic regulations:
Aviation traffic data; collection, processing, and reporting requirements; comments due by 7-18-05; published 4-18-05 [FR 05-07772]

TRANSPORTATION DEPARTMENT
Federal Aviation Administration
Airworthiness directives:
Airbus; comments due by 7-18-05; published 6-22-05 [FR 05-12303]
Bell; comments due by 7-18-05; published 5-17-05 [FR 05-09762]
Boeing; comments due by 7-18-05; published 6-3-05 [FR 05-11049]
Bombardier; comments due by 7-18-05; published 5-17-05 [FR 05-09553]
Cessna Aircraft Co.; comments due by 7-19-05; published 5-19-05 [FR 05-09988]
Empresa Brasileira de Aeronautica S.A. (EMBRAER); comments due by 7-18-05; published 6-22-05 [FR 05-12314]
General Electric; comments due by 7-18-05; published 5-19-05 [FR 05-09887]
Schweizer Aircraft Corp.; comments due by 7-18-05; published 5-18-05 [FR 05-09764]
Tiger Aircraft, LLC; comments due by 7-18-05; published 5-19-05 [FR 05-09974]
Turbomeca; comments due by 7-18-05; published 5-19-05 [FR 05-09982]
Airworthiness standards:
Special conditions—
AMSAFE, Inc.; Adam Model A500; comments due by 7-21-05; published 6-21-05 [FR 05-12148]
Duncan Aviation Inc.; Raytheon 300 King Air airplane; comments due by 7-22-05; published 6-22-05 [FR 05-12363]
Class E airspace; comments due by 7-18-05; published 6-22-05 [FR 05-12378]
Commercial space transportation:
Miscellaneous changes; comments due by 7-18-05; published 5-19-05 [FR 05-09705]

TRANSPORTATION DEPARTMENT
National Highway Traffic Safety Administration
Motor vehicle safety standards:
Occupant crash protection—
Attaching child restraints to the LATCH system for the suppression test; comments due by 7-18-05; published 5-19-05 [FR 05-09924]

TRANSPORTATION DEPARTMENT
Pipeline and Hazardous Materials Safety Administration
Hazardous materials transportation:
Infectious substances; United Nations recommendations harmonization; comments due by 7-18-05; published 5-19-05 [FR 05-09717]

TREASURY DEPARTMENT
Alcohol and Tobacco Tax and Trade Bureau
Alcohol; viticultural area designations:

Livermore Valley, Alameda County, CA; comments due by 7-18-05; published 5-19-05 [FR 05-10006]

San Antonio Valley, Monterey County, CA; comments due by 7-18-05; published 5-19-05 [FR 05-10008]

San Francisco Bay and Central Coast, CA; comments due by 7-18-05; published 5-19-05 [FR 05-10007]

Wahluke Slope, Grant County, WA; comments due by 7-18-05; published 5-19-05 [FR 05-10009]

LIST OF PUBLIC LAWS

This is a continuing list of public bills from the current session of Congress which have become Federal laws. It may be used in conjunction with "P L U S" (Public Laws Update Service) on 202–741–6043. This list is also available online at *http://www.archives.gov/federal_register/public_laws/public_laws.html*.

The text of laws is not published in the **Federal Register** but may be ordered in "slip law" (individual pamphlet) form from the Superintendent of Documents, U.S. Government Printing Office, Washington, DC 20402 (phone, 202–512–1808). The text will also be made available on the Internet from GPO Access at *http://www.gpoaccess.gov/plaws/index.html*. Some laws may not yet be available.

S. 714/P.L. 109–21

Junk Fax Prevention Act of 2005 (July 9, 2005; 119 Stat. 359)

Last List July 5, 2005

Public Laws Electronic Notification Service (PENS)

PENS is a free electronic mail notification service of newly enacted public laws. To subscribe, go to *http://listserv.gsa.gov/archives/publaws-l.html*

Note: This service is strictly for E-mail notification of new laws. The text of laws is not available through this service. **PENS** cannot respond to specific inquiries sent to this address.