Federal Register

3–29–05 Tuesday
Vol. 70 No. 59 Mar. 29, 2005

Pages 15723–16094

The **FEDERAL REGISTER** (ISSN 0097–6326) is published daily, Monday through Friday, except official holidays, by the Office of the Federal Register, National Archives and Records Administration, Washington, DC 20408, under the Federal Register Act (44 U.S.C. Ch. 15) and the regulations of the Administrative Committee of the Federal Register (1 CFR Ch. I). The Superintendent of Documents, U.S. Government Printing Office, Washington, DC 20402 is the exclusive distributor of the official edition. Periodicals postage is paid at Washington, DC.

The **FEDERAL REGISTER** provides a uniform system for making available to the public regulations and legal notices issued by Federal agencies. These include Presidential proclamations and Executive Orders, Federal agency documents having general applicability and legal effect, documents required to be published by act of Congress, and other Federal agency documents of public interest.

Documents are on file for public inspection in the Office of the Federal Register the day before they are published, unless the issuing agency requests earlier filing. For a list of documents currently on file for public inspection, see *www.archives.gov.*

**The seal of the National Archives and Records Administration authenticates the Federal Register** as the official serial publication established under the Federal Register Act. Under 44 U.S.C. 1507, the contents of the **Federal Register** shall be judicially noticed.

The **Federal Register** is published in paper and on 24x microfiche. It is also available online at no charge as one of the databases on GPO Access, a service of the U.S. Government Printing Office.

The online edition of the **Federal Register** *www.gpoaccess.gov/nara,* available through GPO Access, is issued under the authority of the Administrative Committee of the Federal Register as the official legal equivalent of the paper and microfiche editions (44 U.S.C. 4101 and 1 CFR 5.10). It is updated by 6 a.m. each day the **Federal Register** is published and includes both text and graphics from Volume 59, Number 1 (January 2, 1994) forward.

For more information about GPO Access, contact the GPO Access User Support Team, call toll free 1-888-293-6498; DC area 202-512-1530; fax at 202-512-1262; or via e-mail at *gpoaccess@gpo.gov.* The Support Team is available between 7:00 a.m. and 9:00 p.m. Eastern Time, Monday–Friday, except official holidays.

The annual subscription price for the **Federal Register** paper edition is $749 plus postage, or $808, plus postage, for a combined **Federal Register, Federal Register** Index and List of CFR Sections Affected (LSA) subscription; the microfiche edition of the **Federal Register** including the **Federal Register** Index and LSA is $165, plus postage. Six month subscriptions are available for one-half the annual rate. The prevailing postal rates will be applied to orders according to the delivery method requested. The price of a single copy of the daily **Federal Register,** including postage, is based on the number of pages: $11 for an issue containing less than 200 pages; $22 for an issue containing 200 to 400 pages; and $33 for an issue containing more than 400 pages. Single issues of the microfiche edition may be purchased for $3 per copy, including postage. Remit check or money order, made payable to the Superintendent of Documents, or charge to your GPO Deposit Account, VISA, MasterCard, American Express, or Discover. Mail to: New Orders, Superintendent of Documents, P.O. Box 371954, Pittsburgh, PA 15250-7954; or call toll free 1-866-512-1800, DC area 202-512-1800; or go to the U.S. Government Online Bookstore site, see *bookstore.gpo.gov.*

There are no restrictions on the republication of material appearing in the **Federal Register.**

**How To Cite This Publication:** Use the volume number and the page number. Example: 70 FR 12345.

**Postmaster:** Send address changes to the Superintendent of Documents, Federal Register, U.S. Government Printing Office, Washington DC 20402, along with the entire mailing label from the last issue received.

## SUBSCRIPTIONS AND COPIES

**PUBLIC**

**Subscriptions:**

| | |
|---|---|
| Paper or fiche | **202–512–1800** |
| Assistance with public subscriptions | **202–512–1806** |

**General online information** **202–512–1530; 1–888–293–6498**

**Single copies/back copies:**

| | |
|---|---|
| Paper or fiche | **202–512–1800** |
| Assistance with public single copies | **1–866–512–1800 (Toll-Free)** |

**FEDERAL AGENCIES**

**Subscriptions:**

| | |
|---|---|
| Paper or fiche | **202–741–6005** |
| Assistance with Federal agency subscriptions | **202–741–6005** |

**FEDERAL REGISTER WORKSHOP**

**THE FEDERAL REGISTER: WHAT IT IS AND HOW TO USE IT**

FOR: Any person who uses the Federal Register and Code of Federal Regulations.

WHO: Sponsored by the Office of the Federal Register.

WHAT: Free public briefings (approximately 3 hours) to present:

1. The regulatory process, with a focus on the Federal Register system and the public's role in the development of regulations.

2. The relationship between the Federal Register and Code of Federal Regulations.

3. The important elements of typical Federal Register documents.

4. An introduction to the finding aids of the FR/CFR system.

WHY: To provide the public with access to information necessary to research Federal agency regulations which directly affect them. There will be no discussion of specific agency regulations.

WHEN: Tuesday, April 19, 2005
9:00 a.m.–Noon

WHERE: Office of the Federal Register
Conference Room, Suite 700
800 North Capitol Street
Washington, DC 20002

RESERVATIONS: (202) 741–6008

Printed on recycled paper.

# Contents

**Federal Register**

Vol. 70, No. 59

Tuesday, March 29, 2005

**Administration on Aging**
*See* Aging Administration

**Agency for Healthcare Research and Quality**
NOTICES
Agency information collection activities; proposals, submissions, and approvals, 15859–15860
Meetings:
Healthcare Research and Quality National Advisory Council, 15860–15861

**Aging Administration**
NOTICES
Agency information collection activities; proposals, submissions, and approvals, 15861–15862

**Agricultural Marketing Service**
NOTICES
Asparagus; grade standards, 15817

**Agricultural Research Service**
NOTICES
Agency information collection activities; proposals, submissions, and approvals, 15817–15818

**Agriculture Department**
*See* Agricultural Marketing Service
*See* Agricultural Research Service
*See* Commodity Credit Corporation
*See* Federal Crop Insurance Corporation
*See* Natural Resources Conservation Service
*See* Rural Utilities Service

**Antitrust Division**
NOTICES
Competitive impact statements and proposed consent judgments:
Conners Bros. Income Fund, et al., 15886–15892

**Children and Families Administration**
NOTICES
Agency information collection activities; proposals, submissions, and approvals, 15862–15863

**Coast Guard**
RULES
Drawbridge operations:
Massachusetts, 15765–15767
Mississippi, 15763
New York, 15763–15765, 15767
Great Lakes pilotage regulations:
Rate adjustments; correction, 15779
Ports and waterways safety:
Delaware River, PA; safety zone, 15767–15769
Regattas and marine parades:
Safety at Sea Seminar, 15763
PROPOSED RULES
Regattas and marine parades:
Maritime Week Tugboat Races, 15786–15788
Piankatank River Race, 15788–15790

**Commerce Department**
*See* Foreign-Trade Zones Board
*See* International Trade Administration
*See* National Oceanic and Atmospheric Administration

**Commodity Credit Corporation**
RULES
Loan and purchase programs:
Crop Disaster Programs, 15725–15736

**Commodity Futures Trading Commission**
NOTICES
Meetings:
Commodity pool operators and commodity industry issues, 15842

**Comptroller of the Currency**
RULES
Response programs for unauthorized access to customer information and customer notice; interagency guidance, 15736–15754

**Consumer Product Safety Commission**
NOTICES
Settlement agreements:
Graco Children's Products, Inc., 15842–15847

**Customs and Border Protection Bureau**
NOTICES
Customhouse broker license cancellation, suspension, etc.:
Enoch Van Hoesen et al., 15868–15869
Godwin Shipping Co., Inc., et al., 15869

**Defense Department**
RULES
Mineral exploration and extraction on DOD lands; CFR part removed, 15762
PROPOSED RULES
Contractors' safety standards for explosives and ammunition; revision, 16037–16077
NOTICES
Privacy Act:
Systems of records, 15847–15848

**Employment and Training Administration**
NOTICES
Agency information collection activities; proposals, submissions, and approvals, 15897–15898

**Energy Department**
NOTICES
Meetings:
Environmental Management Site-Specific Advisory Board—
Fernald Site, OH, 15848–15849
Paducah Gaseous Diffusion Plant, KY, 15849

**Environmental Protection Agency**
RULES
Air pollutants, hazardous; national emission standards:
Electric utility steam generating units and removal of coal- and oil-fired electric utility steam generating units from Section 112(c) list, 15993–16035

Air quality implementation plans; approval and promulgation; various States:
Pennsylvania, 15774–15778
Texas, 15769–15774
PROPOSED RULES
Air quality implementation plans; approval and promulgation; various States:
Pennsylvania, 15791–15792
Texas, 15790–15791
NOTICES
Air pollution control:
State operating permits programs—
California, 15849–15850
Grants and cooperative agreements; availability, etc.:
Coastal recreation waters adjacent to beaches; microbiological testing and monitoring, 15850–15855
Meetings:
Science Advisory Board, 15855–15856

**Executive Office of the President**
*See* Presidential Documents
*See* Trade Representative, Office of United States

**Federal Aviation Administration**
RULES
Air traffic operating and flight rules, etc.:
Grand Canyon National Park; special flight rules in vicinity—
Noise limitations, 16083–16093
Class E airspace, 15754–15755
PROPOSED RULES
Airworthiness directives:
Rolls-Royce Corp., 15784–15786
NOTICES
Agency information collection activities; proposals, submissions, and approvals, 15980
Grants and cooperative agreements; availability, etc.:
Airport Improvement Program, 15980–15982
Meetings:
RTCA, Inc., 15983
RTCA Program Management Committee, 15982–15983

**Federal Communications Commission**
NOTICES
Agency information collection activities; proposals, submissions, and approvals, 15856–15857

**Federal Crop Insurance Corporation**
NOTICES
Grants and cooperative agreements; availability, etc.:
Commodity Partnerships for Risk Management Education Program, 15818–15824
Commodity Partnerships Small Sessions Program, 15824–15829
Crop Insurance Education in Targeted States Program, 15829–15834

**Federal Deposit Insurance Corporation**
RULES
Response programs for unauthorized access to customer information and customer notice; interagency guidance, 15736–15754
NOTICES
Agency information collection activities; proposals, submissions, and approvals, 15857–15858

**Federal Railroad Administration**
NOTICES
Grants and cooperative agreements; availability, etc.:
Next Generation High-Speed Rail Program, 15983–15984

**Federal Reserve System**
RULES
Response programs for unauthorized access to customer information and customer notice; interagency guidance, 15736–15754
NOTICES
Banks and bank holding companies:
Formations, acquisitions, and mergers, 15858–15859
Meetings; Sunshine Act, 15859

**Fish and Wildlife Service**
RULES
Endangered and threatened species:
Vicuna (various populations in South America); reclassification, 15780–15782
PROPOSED RULES
Wild Bird Conservation Act:
Non-captive-bred species; approved list; additions—
Blue-fronted Amazon parrots from Argentina, 15798–15799

**Food and Drug Administration**
RULES
Animal drugs, feeds, and related products:
Zeranol, 15758–15759
Color additives:
Certification services fee increase, 15755–15756
Food additives:
Glycerol ester of gum rosin, 15756–15758
NOTICES
Agency information collection activities; proposals, submissions, and approvals, 15863–15865
Human drugs:
Best Pharmaceuticals for Children Act—
Pediatric studies; referral of KEMSTRO and DROXIA to Foundation for National Institutes of Health, 15865–15866
Meetings:
Pulmonary-Allergy Drugs Advisory Committee, 15866
Reports and guidance documents; availability, etc.:
Premarketing risk assessment; risk minimization action plans, development and use; and good pharmacovigilance practices and pharmacoepidemiologic assessment, 15866–15867
Systemic lupus erythematosus; developing drugs for treatment; draft guidance, 15868

**Foreign Assets Control Office**
RULES
Iranian assets control, Libyan sanctions, and Iraqi sanctions regulations:
Civil penalties; administrative collection, 15761–15762

**Foreign-Trade Zones Board**
NOTICES
*Applications, hearings, determinations, etc.:*
Florida, 15836

**General Services Administration**
RULES
Acquisition regulations:
General Services Administration Acquisition Regulation; deviations, 15779–15780

PROPOSED RULES
Federal Management Regulation:
Disposition of seized, forfeited, voluntarily abandoned, and unclaimed personal property, 15792–15797

**Health and Human Services Department**
*See* Agency for Healthcare Research and Quality
*See* Aging Administration
*See* Children and Families Administration
*See* Food and Drug Administration

**Homeland Security Department**
*See* Coast Guard
*See* Customs and Border Protection Bureau

**Housing and Urban Development Department**
RULES
Mortgage and loan insurance programs:
Single family mortgage insurance—
Adjustable rate mortgages; eligibility, 16079–16082

**Indian Affairs Bureau**
RULES
Law and order on Indian reservations:
Winnemucca Reservation and Colony, NV; Courts of Indian Offenses, 15759–15761
NOTICES
Agency information collection activities; proposals, submissions, and approvals, 15871–15872

**Indian Arts and Crafts Board**
NOTICES
Agency information collection activities; proposals, submissions, and approvals, 15869–15870

**Interior Department**
*See* Fish and Wildlife Service
*See* Indian Affairs Bureau
*See* Reclamation Bureau
NOTICES
Committees; establishment, renewal, termination, etc.:
Outer Continental Shelf Policy Committee, 15871
Meetings:
Exxon Valdez Oil Spill Trustee Council, 15871

**International Trade Administration**
NOTICES
Antidumping:
Honey from—
China, 15836–15837
Magnesium Metal from—
China, 15838–15840
Russian Federation, 15837
Countervailing duties:
Stainless steel wire rod from—
Italy, 15840–15841

**International Trade Commission**
NOTICES
Import investigations:
Color television receivers and color display monitors, and components thereof, 15883–15884
Frozen concentrated orange juice from—
Brazil, 15884
Polyethylene terephthalate resin from—
Taiwan, 15884–15885
Thailand, 15884
Rubber antidegradants, components thereof, and products containing the same, 15885
Meetings; Sunshine Act, 15885–15886

**Justice Department**
*See* Antitrust Division

**Labor Department**
*See* Employment and Training Administration
*See* Mine Safety and Health Administration
*See* Veterans Employment and Training Service
NOTICES
Agency information collection activities; proposals, submissions, and approvals, 15892–15897

**Maritime Administration**
NOTICES
Coastwise trade laws; administrative waivers:
SEA BISCUIT, 15984
Coastwise trade laws; administrative waiver:
KNOT A PROBLEM, 15984–15985
SOLSTICE, 15985
Coastwise trade laws; administrative waivers:
NUBIAN, 15985–15986
SIRIUS, 15986
Coastwise trade laws; administrative waiver:
DECEPTION, 15986–15987

**Mine Safety and Health Administration**
NOTICES
Safety standard petitions:
Webster County Coal, LLC, 15898–15899

**Morris K. Udall Scholarship and Excellence in National Environmental Policy Foundation**
NOTICES
Meetings; Sunshine Act, 15937

**National Aeronautics and Space Administration**
NOTICES
Meetings:
Advisory councils—
Aeronautics Research Advisory Committee, 15937–15938

**National Credit Union Administration**
NOTICES
Agency information collection activities; proposals, submissions, and approvals, 15938

**National Highway Traffic Safety Administration**
NOTICES
Motor vehicle safety standards:
Exemption petitions, etc—
Spyker Automobielen B.V., 15987–15988

**National Oceanic and Atmospheric Administration**
RULES
Fishery conservation and management:
Alaska; fisheries of Exclusive Economic Zone—
Pacific cod, 15782
PROPOSED RULES
Endangered and threatened species:
Sea turtles conservation requirements—
Exceptions to taking prohibitions; Florida and Pacific coast of Mexico, 15800–15803
Fishery conservation and management:
Northeastern United States fisheries—
Northeast multispecies, 15803–15816
NOTICES
Meetings:
New England Fishery Management Council, 15841

**Natural Resources Conservation Service**
NOTICES
Environmental statements; record of decision:
Lower Payette River Ditch Co., ID; ditch replacement, 15834

**Nuclear Regulatory Commission**
NOTICES
Meetings; Sunshine Act, 15939–15940
Operating licenses, amendments; no significant hazards considerations; biweekly notices, 15940–15955
*Applications, hearings, determinations, etc.:*
Sacramento Municipal Utility District, 15938–15939

**Office of United States Trade Representative**
*See* Trade Representative, Office of United States

**Personnel Management Office**
PROPOSED RULES
Practice and procedure:
Solicitation of Federal civilian and uniformed service personnel for contributions to private voluntary organizations-
Combined Federal Campaign, 15783–15784

**Pipeline and Hazardous Materials Safety Administration**
NOTICES
Meetings:
Pipeline safety; assuring distribution pipeline integrity, 15988–15989

**Presidential Documents**
PROCLAMATIONS
*Special observances:*
Greek Independence Day: A National Day of Celebration of Greek and American Democracy (Proc. 7876), 15723

**Reclamation Bureau**
RULES
Public conduct on Reclamation lands and projects, 15778–15779
NOTICES
Closure orders:
Trinity Lake, CA, 15872–15873
Colorado River reservoirs; coordinated long-range operating criteria; review, 15873–15883

**Rural Utilities Service**
NOTICES
Agency information collection activities; proposals, submissions, and approvals, 15835–15836

**Securities and Exchange Commission**
NOTICES
Self-regulatory organizations; proposed rule changes:
Boston Stock Exchange, Inc., 15955–15959
Fixed Income Clearing Corp., 15959–15962
International Securities Exchange LLC, 15962–15968
National Association of Securities Dealers, Inc., 15968
Philadelphia Stock Exchange, Inc., 15968–15969
*Applications, hearings, determinations, etc.:*
Hythiam, Inc., 15955

**Small Business Administration**
NOTICES
Disaster loan areas:
Alaska, 15969–15970
Nevada, 15970
Ohio, 15970

**Surface Transportation Board**
NOTICES
Rail carriers:
Control exemptions—
Keokuk Junction Railway Co., 15989
Railroad services abandonment:
Springfield Terminal Railway Co., 15989–15990

**Thrift Supervision Office**
RULES
Response programs for unauthorized access to customer information and customer notice; interagency guidance, 15736–15754

**Trade Representative, Office of United States**
NOTICES
Generalized System of Preferences:
Competitive need limitations; import statistics, 15970–15980

**Transportation Department**
*See* Federal Aviation Administration
*See* Federal Railroad Administration
*See* Maritime Administration
*See* National Highway Traffic Safety Administration
*See* Pipeline and Hazardous Materials Safety Administration
*See* Surface Transportation Board
PROPOSED RULES
Intelligence Reform and Terrorism Prevention Act; implementation:
Driver's Licenses and Personal Identification Cards Negotiated Rulemaking Advisory Committee
Meetings, 15797–15798

**Treasury Department**
*See* Comptroller of the Currency
*See* Foreign Assets Control Office
*See* Thrift Supervision Office
NOTICES
Agency information collection activities; proposals, submissions, and approvals, 15990
Meetings:
President's Advisory Panel on Federal Tax Reform, 15990–15991

**Veterans Employment and Training Service**
NOTICES
Grant and cooperative agreement awards:
Urban Homeless Veterans' Reintegration Program, 15899–15937

---

**Separate Parts In This Issue**

**Part II**
Environmental Protection Agency, 15993–16035

**Part III**
Defense Department, 16037–16077

**Part IV**
Housing and Urban Development Department, 16079–16082

**Part V**

Transportation Department, Federal Aviation Administration, 16083–16093

**Reader Aids**

Consult the Reader Aids section at the end of this issue for phone numbers, online resources, finding aids, reminders, and notice of recently enacted public laws.

To subscribe to the Federal Register Table of Contents LISTSERV electronic mailing list, go to http://listserv.access.gpo.gov and select Online mailing list archives, FEDREGTOC-L, Join or leave the list (or change settings); then follow the instructions.

## CFR PARTS AFFECTED IN THIS ISSUE

A cumulative list of the parts affected this month can be found in the Reader Aids section at the end of this issue.


**3 CFR**
**Proclamations:**
7876 ..... 15723

**5 CFR**
**Proposed Rules:**
950 ..... 15783

**7 CFR**
1479 ..... 15725

**12 CFR**
30 ..... 15736
208 ..... 15736
225 ..... 15736
364 ..... 15736
568 ..... 15736
570 ..... 15736

**14 CFR**
71 ..... 15754
93 ..... 16084
**Proposed Rules:**
39 ..... 15784

**21 CFR**
80 ..... 15755
172 ..... 15756
556 ..... 15758

**24 CFR**
203 ..... 16080

**25 CFR**
11 ..... 15759

**31 CFR**
535 ..... 15761
550 ..... 15761
575 ..... 15761

**32 CFR**
189 ..... 15762
**Proposed Rules:**
184 ..... 16038

**33 CFR**
100 ..... 15763
117 (4 documents) ..... 15763, 15765, 15767
165 ..... 15767
**Proposed Rules:**
100 (2 documents) ..... 15786, 15788

**40 CFR**
52 (2 documents) ..... 15769, 15774
63 ..... 15994
**Proposed Rules:**
52 (2 documents) ..... 15790, 15791

**41 CFR**
**Proposed Rules:**
101-48 ..... 15792
102-41 ..... 15792

**43 CFR**
423 ..... 15778

**46 CFR**
401 ..... 15779

**48 CFR**
501 ..... 15779

**49 CFR**
**Proposed Rules:**
Subtitle A ..... 15797

**50 CFR**
17 ..... 15780
679 ..... 15782
**Proposed Rules:**
15 ..... 15798
222 ..... 15800
648 ..... 15803

Federal Register
Vol. 70, No. 59
Tuesday, March 29, 2005

# Presidential Documents

**Title 3—**

## The President

**Proclamation 7876 of March 24, 2005**

## Greek Independence Day: A National Day of Celebration of Greek and American Democracy, 2005

**By the President of the United States of America**

**A Proclamation**

Well before modern Greece gained her independence, the ancient Athenians adopted democratic principles that guided their society. These principles inspired our Founding Fathers to proclaim the imperative of self-government as they worked to build our great Nation. America's love for liberty has deep roots in the spirit of Greece. On Greek Independence Day, we celebrate our special ties of friendship, history, and shared values with Greece.

Our country has welcomed generations of Greek immigrants, and we are grateful for their talents, wisdom, and creativity. We honor the Greek spirit that values family and education, public service and faith. Greek Americans have made a mark in every field—enhancing our culture, enriching our commerce, and defending our freedom. Their strong record of public service has also strengthened our democracy, and their contributions have made America a better place.

As we address the challenges of the 21st century, the United States and Greece remain committed partners in the vital work of advancing freedom and democracy. Our two Nations are founded on shared ideals of liberty, and we are working together to advance those ideals across the world today.

NOW, THEREFORE, I, GEORGE W. BUSH, President of the United States of America, by virtue of the authority vested in me by the Constitution and laws of the United States, do hereby proclaim March 25, 2005, as Greek Independence Day: A National Day of Celebration of Greek and American Democracy. I call upon all Americans to observe this day with appropriate ceremonies and activities.

IN WITNESS WHEREOF, I have hereunto set my hand this twenty-fourth day of March, in the year of our Lord two thousand five, and of the Independence of the United States of America the two hundred and twenty-ninth.

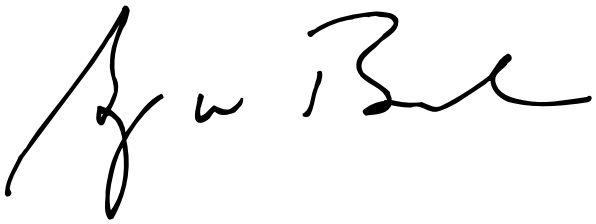

[FR Doc. 05–6328
Filed 3–28–05; 8:45 am]
Billing code 3195–01–P

# Rules and Regulations

Federal Register
Vol. 70, No. 59
Tuesday, March 29, 2005

This section of the FEDERAL REGISTER contains regulatory documents having general applicability and legal effect, most of which are keyed to and codified in the Code of Federal Regulations, which is published under 50 titles pursuant to 44 U.S.C. 1510.

The Code of Federal Regulations is sold by the Superintendent of Documents. Prices of new books are listed in the first FEDERAL REGISTER issue of each week.

## DEPARTMENT OF AGRICULTURE

### Commodity Credit Corporation

### 7 CFR 1479

**RIN 0560–AH24**

## 2003–2005 Crop Disaster Programs

**AGENCY:** Commodity Credit Corporation, USDA.

**ACTION:** Final rule.

**SUMMARY:** This rule implements portions of the Military Construction, Appropriations and Emergency Hurricane Supplemental Appropriations Act, 2005 enacted October 13, 2004 (the 2004 Act), to authorize crop-loss disaster assistance for producers who suffered 2003, 2004, or 2005 crop losses caused by damaging weather and related conditions. Also included under this rule is authority for disaster assistance specifically for producers in Virginia, and producers of fruit and vegetable crops located in North Carolina that suffered losses due to adverse weather and related conditions that occurred in 2003.

**EFFECTIVE DATE:** March 28, 2005.

**FOR FURTHER INFORMATION CONTACT:** Eloise Taylor, Chief, Compliance Branch, Production, Emergencies, and Compliance Division, Farm Service Agency (FSA), United States Department of Agriculture, STOP 0517, 1400 Independence Avenue, SW., Washington, DC 20250–0517; telephone (202) 720–9882; e-mail *Eloise_Taylor@wdc.usda.gov*.

Persons with disabilities who require alternative means for communication (Braille, large print, audio tape, etc.) should contact the USDA Target Center at (202) 720 2600 (voice and TDD).

## Background

*Disaster Assistance for Crop Producers*

Division B of the 2004 Act (Pub. L. 108–324, 118 Stat. 1220, October 13, 2004) authorizes the Secretary, generally, to provide assistance to crop producers for qualifying crop or crop quality losses due to damaging weather and related conditions for one, but not more than one of the 2003, 2004, or 2005 crop years in the same manner as provided for eligible crop losses under section 815 of the Agricultural, Rural Development, Food and Drug Administration, and Related Agencies Appropriations Act, 2001 (Pub. L. 106–387; 114 Stat. 1549A–55) (2001 Act). The 2001 Act provided coverage for 2000 crop losses and was codified in 7 CFR part 1480 (66 FR 15979, March 21, 2001). Eligible crop losses for 2005 are limited to only those losses caused by a hurricane or tropical storm of the 2004 hurricane season in counties declared disaster areas by the President. The 2004 Act specifies, too, that notwithstanding the crop-year election otherwise required, $53 million shall be provided to the Secretary of which $50 million shall be for losses located in the Commonwealth of Virginia and $3 million shall be for fruit and vegetable losses in North Carolina specifically caused by adverse weather and related conditions in 2003. Special approved yields based on actual production are prohibited unless production reports were submitted before enactment of the 2005 Act. The statute provides that total assistance provided to a producer for a crop year under the Crop Disaster Program (CDP) (including the Virginia and North Carolina Programs), together with any amount provided to the same producer for the same crop made pursuant to any crop insurance program, and/or the Noninsured Crop Disaster Assistance Program (NAP), plus the value of the crop that was not lost, may not exceed 95 percent of the value of the crop in the absence of a loss, as estimated by the Secretary.

The same loss thresholds used with respect to the 2000 CDP are applicable to the 2003, 2004, and 2005 CDP, including those losses under the Virginia and North Carolina provisions. If a producer under this rule seeks payments with regard to a crop for which insurance was available under a Federal Crop Insurance Act (FCIA) plan, but for which such insurance was not obtained, the producer must purchase crop insurance coverage at a level greater than the level available under the catastrophic risk protection for each of the next two subsequent crops. Also, in order to obtain benefits for 2003, 2004, or 2005 CDP, or the Virginia and North Carolina programs, for a ''non-insurable'' crop (*i.e.*, a crop for which FCIA related insurance is not available), and for which NAP coverage was not obtained, the producer must pay the applicable service fee and complete all paperwork in accordance with NAP requirements for the next two crops. Producers who fail to agree with these requirements or fail to obtain the correct acreage as required will be required to refund the assistance provided under this rule, plus interest.

Applications for 2003, 2004 or 2005 CDP (including applications under the Virginia and North Carolina special loss provisions) must be submitted during the sign-up period as announced by the Deputy Administrator. False certifications by producers carry strict penalties and FSA will validate applications with random spot-checks of acreage and production evidence.

The 2004 Act provides that persons who received payment under the special Florida Disaster Program operated by USDA are not eligible under this new 2003–2005 Crop Disaster Program. A payment limitation of $80,000 per ''person,'' as defined by part 1400 of this chapter, will be applicable to the total, for each crop year, of all 2003, 2004 and 2005 CDP benefits (including assistance under the special provisions for Virginia and North Carolina crops). As provided in the 2004 Act, unlike disaster programs in the past, the average adjusted gross income (AGI) limitation as administered under 7 CFR part 1400, subpart G, will apply rather than a gross revenue test Under the AGI test, producers will not be eligible for 2003, 2004 or 2005 CDP benefits, or benefits under the Virginia and North Carolina crop-loss provisions, if the average AGI of the individual or entity exceeds $2.5 million and less than 75 percent of the average AGI is derived from farming, ranching, or forestry operations. AGI eligibility will be based on the average of the adjusted gross incomes for the three tax years immediately preceding the tax year in which the disasters occurred, with the exclusion of any

year(s) the individual or entity, as determined under part 1400, did not have income or had an AGI of zero. Other restrictions apply. Crop losses that are not weather-related are not covered.

*Cost-Benefit Analysis Summary*

Payments for RMA-insured crops will be made at 65 percent of the price for insured and uninsurable crops, and at 60 percent of the price for uninsured crops. Payments for insured crops will be made at a slightly higher rate to provide an incentive to purchase crop insurance. Payments for non-insurable crops will also be made at the higher level because insurance is not available for these crops. Crop losses under the 2003, 2004 and 2005 CDP are expected to be about $2.75 billion. Crop losses under the Virginia and North Carolina provision are expected to be $53 million. The $80,000 payment limitation and the $2.5 million AGI limitation will direct the distribution of payments more toward relatively smaller operations. In the absence of any limitations of payment and income applied, large operations would account for a disproportionate share of the crop-loss assistance.

**SUPPLEMENTARY INFORMATION:**

*Notice and Comment*

Section 101(g) of Division B of the 2004 Act requires that these regulations be promulgated without regard to the notice and comment provisions of 5 U.S.C. 553 or the Statement of Policy of the Secretary of Agriculture effective July 24, 1971 (36 FR 13804), relating to notice and comment rulemaking and public participation in rulemaking. These regulations are thus issued as final.

*Executive Order 12866*

This final rule has been determined to be economically significant under Executive Order 12866 and has been reviewed by the Office of Management and Budget (OMB). A Cost-Benefit Analysis was completed and is summarized following the Background section.

*Federal Assistance Programs*

The title and number of the Federal assistance program, as found in the Catalog of Federal Domestic Assistance, to which this final rule applies are: 10.073—Crop Disaster Program.

*Regulatory Flexibility Act*

The Regulatory Flexibility Act is not applicable to this rule because neither the Secretary of Agriculture nor CCC are required by 5 U.S.C. 553 or any other law to publish a notice of proposed rulemaking for the subject matter of this rule.

*Environmental Review*

The environmental impacts of this rule have been considered consistent with the National Environmental Policy Act of 1969 (NEPA), 42 U.S.C. 4321 *et seq.*, the regulations of the Council on Environmental Quality (40 CFR parts 1500 through 1508), and regulations of the Farm Service Agency (FSA) of the Department of Agriculture (USDA) for compliance with NEPA, 7 CFR part 799. An Environmental Evaluation was completed and it was determined that this action does not have the potential to significantly impact the quality of the human environment and, therefore, the rule is categorically excluded from further review under NEPA. A copy of the environmental evaluation is available for inspection and review upon request.

*Executive Order 12778*

The final rule has been reviewed in accordance with Executive Order 12778. This final rule preempts State laws that are inconsistent with its provisions, but the rule is not retroactive. Before any judicial action may be brought concerning this rule, all administrative remedies must be exhausted.

*Executive Order 12372*

This program is not subject to Executive Order 12372, which requires intergovernmental consultation with State and local officials. See the notice related to 7 CFR part 3015, subpart V, published at 48 FR 29115 (June 24, 1983).

*Unfunded Mandates*

Title II of the Unfunded Mandates Reform Act of 1995 (UMRA) does not apply to this rule because neither the Secretary of Agriculture nor CCC are required by 5 U.S.C. 553 or any other law to publish a notice of proposed rulemaking for the subject matter of this rule. Also, the rule imposes no mandates as defined in UMRA.

*Small Business Regulatory Enforcement Fairness Act of 1996*

Section 101(g) of Division B of the 2004 Act requires that the Secretary use the authority in section 808 of the Small Business Regulatory Enforcement Fairness Act of 1996, Pub. L. 104–121 (SBREFA), which allows an agency to forgo SBREFA's usual 60-day Congressional Review delay of the effective date of a major regulation if the agency finds that there is a good cause to do so. Accordingly, this rule is effective upon the date of filing for public inspection by the Office of the Federal Register.

*Paperwork Reduction Act*

Section 101(g) of Division B the 2004 Act requires that these regulations be promulgated and the activities under this rule be administered without regard to the Paperwork Reduction Act. This means that the information to be collected from the public to implement these provisions and the burden, in time and money, the collection of the information would have on the public does not have to be approved by the Office of Management and Budget or be subject to the normal requirement for a 60-day public comment period.

*Government Paperwork Elimination Act*

CCC is committed to compliance with the Government Paperwork Elimination Act (GPEA) and the Freedom to E-File Act, which require Government agencies in general, and the FSA in particular, to provide the public the option of submitting information or transacting business electronically to the maximum extent possible. Because of the need to publish these regulations quickly, the forms and other information collection activities required to be utilized by a person subject to this rule are not yet fully implemented in a way that would allow the public to conduct business with CCC electronically. Accordingly, at this time, all forms required to be submitted under this rule may be submitted to CCC by mail or FAX.

**List of Subjects in 7 CFR 1479**

Agricultural commodities, Crop insurance, Disaster assistance.

■ Accordingly, 7 CFR part 1479 is added to read as follows:

## PART 1479—2003–2005 CROP DISASTER PROGRAM

Sec.

1479.100 Applicability.
1479.101 Administration.
1479.102 Definitions.
1479.103 Producer eligibility.
1479.104 Time for filing application.
1479.105 Limitations on payments and other benefits.
1479.106 Requirement to purchase crop insurance and non-insurable coverage.
1479.107 Miscellaneous provisions.
1479.108 Additional general provisions.
1479.109 Eligible disaster conditions.
1479.110 Qualifying 2003, 2004, or 2005-crop losses.
1479.111 Rates and yields; calculating payments.
1479.112 Production losses, producer responsibility.
1479.113 Determination of production.

1479.114 Calculation of acreage for crop losses other than prevented planted.
1479.115 Calculation of prevented planted acreage.
1479.116 Quantity adjustments for diminished quality for certain crops.
1479.117 Value loss crops.
1479.118 Other provisions for specialty crops.
1479.119 2005 crop losses only.
1479.120 Quality losses for 2003, 2004, and 2005 crops.
1479.121 Virginia crop losses.
1479.122 North Carolina fruit and vegetable crop losses.
1479.123 Misrepresentation, and scheme or device.
1479.124 Offsets, assignments, and debt settlement.
1479.125 Compliance with highly erodible land, and wetland conservation provisions.

**Authority:** Pub. L. 106–387, 114 Stat. 1549; Pub. L. 108–324, 118 Stat. 1220; 15 U.S.C. 14 *et seq.*

### § 1479.100 Applicability.

This part sets forth the terms and conditions for the 2003, 2004, and 2005-Crop Disaster Program (CDP). The CDP makes disaster assistance payments available to producers who have incurred losses in quantity or quality on eligible 2003, 2004, or 2005 crops due to disasters as determined by the Commodity Credit Corporation (CCC) under provisions of Division B of the Military Construction Appropriations and Emergency Hurricane Supplemental Appropriations Act, 2005 (Pub. L. 108–324). Provisions of previous crop disaster programs shall continue to be administered under regulations previously issued.

### § 1479.101 Administration.

(a) The program will be administered under the general supervision of the Executive Vice President, CCC, and shall be carried out in the field by the Farm Service Agency (FSA) State and county committees.

(b) State and county committees and representatives do not have the authority to modify or waive any of the provisions of this part.

(c) The State committee shall take any action required by this part that has not been taken by a county committee. The State committee shall also:

(1) Correct or require a county committee to correct any action taken by such FSA county committee that is not in accordance with this part; and

(2) Require a county committee to withhold taking or reverse any action that is not in accordance with this part.

(d) No delegation in this part to a State or county committee shall prevent the Deputy Administrator from determining any question arising under the program or from reversing or modifying any determination made by a State or county committee.

(e) The Deputy Administrator may authorize State and county committees to waive or modify non-statutory deadlines or other program requirements in cases where lateness or failure to meet such does not adversely affect the operation of the program.

### § 1479.102 Definitions.

The definitions in this section apply to all determinations made under this part. The terms defined in part 718 of this title and parts 1400 and 1437 of this chapter shall also be applicable, except where those definitions conflict with the definitions set forth in this section. The definitions follow:

*Actual production* means the total quantity of the crop appraised, harvested or that could have been harvested, as determined by the FSA State or county committee in accordance with instructions issued by the Deputy Administrator.

*Additional coverage* means a plan of insurance established by FCIC that provides coverage comparable to a level for a single crop that is equal to at least 65 percent of the approved yield indemnified at 100 percent of the expected market price.

*Administrative fee* means an amount the producer must pay for Noninsured Crop Disaster Assistance Program (NAP) enrollment for non-insurable crops.

*Appraised production* means production determined by FSA, or a company reinsured by the Federal Crop Insurance Corporation (FCIC), that was unharvested but that was determined to reflect the crop's yield potential at the time of appraisal.

*Approved yield* means the amount of production per acre, computed in accordance with FCIC's Actual Production History Program at 7 CFR part 400, subpart G or, for crops not included under 7 CFR part 400, subpart G, the yield used to determine the guarantee. For crops covered under NAP, the approved yield is established according to part 1437 of this chapter. Only the approved yields based on production evidence submitted to FSA prior to the enactment of Pub. L. 108–324 will be used for purposes of the 2003, 2004, or 2005 CDP. Other yields may be assigned when an eligible approved yield is not available.

*Aquaculture* means the reproduction and rearing of aquatic species in controlled or selected environments including, but not limited to, ocean ranching, except private ocean ranching of Pacific salmon for profit in those States where such ranching is prohibited by law.

*Aquaculture facility* means any land or structure including, but not limited to, a laboratory, hatchery, rearing pond, raceway, pen, incubator, or other equipment used in aquaculture.

*Aquaculture species* means any aquaculture species as defined in part 1437 of this chapter.

*Average market price* means the price or dollar equivalent on an appropriate basis for an eligible crop established by CCC for determining payment amounts. Such price will be based on the harvest basis without the inclusion of transportation, storage, processing, packing, marketing, or other post-harvesting expenses and will be based on historical data.

*Catastrophic risk protection* means the minimum level of coverage offered by FCIC.

*CCC* means the Commodity Credit Corporation.

*Control county* means, for a producer with farming interests in only one county, the FSA county office in which the producer's farm is administratively located or, for a producer with farming interests that are administratively located in more than one county, the FSA county office designated by FSA to control the payments received by the producer.

*County committee* means the FSA county committee.

*Crop insurance* means an insurance policy reinsured by FCIC under the provisions of the Federal Crop Insurance Act, as amended.

*Crop year* means:

(1) For insured and uninsured crops, the crop year as defined according to the applicable crop insurance policy;

(2) For non-insurable crops, the year harvest normally begins for the crop;

(3) For all aquaculture species and nursery crops, the period from October 1 through the following September 30; and

(4) For honey, the period running from January 1 through the following December 31.

*Disaster* means damaging weather, including drought, excessive moisture, hail, freeze, tornado, hurricane, typhoon, excessive wind, excessive heat, weather-related saltwater intrusion, weather-related irrigation water rationing, and earthquake and volcanic eruptions, or any combination thereof. Disaster includes a related condition that occurs as a result of the damaging weather and exacerbates the condition of the crop, such as disease and insect infestation.

*Eligible crop* means a crop (except sugarcane) insured by FCIC as defined

in part 400 of this title, or included under NAP as defined under part 1437 of this chapter. Losses of livestock and livestock related losses are not compensable under this part, but may be compensable under part 1439 of this chapter to the extent provided for in that part.

*End use* means the purpose for which the harvested crop is used, such as grain, hay, or seed.

*Expected market price (price election)* means the price per unit of production (or other basis as determined by FCIC) anticipated during the period the insured crop normally is marketed by producers. This price will be set by FCIC before the sales closing date for the crop. The expected market price may be less than the actual price paid by buyers if such price typically includes remuneration for significant amounts of post-production expenses such as conditioning, culling, sorting, packing, etc.

*Expected production* means, for an agricultural unit, the historic yield multiplied by the number of planted or prevented acres of the crop for the unit.

*FCIC* means the Federal Crop Insurance Corporation, a wholly owned Government Corporation within USDA.

*Final planting* date means the date established by the Risk Management Agency (RMA) for insured and uninsured crops by which the crop must be initially planted in order to be insured for the full production guarantee or amount of insurance per acre. For non-insurable crops, the final planting date is the end of the planting period for the crop as determined by CCC.

*Flood prevention* means:

(1) For aquaculture species, placing the aquaculture facility in an area not prone to flood; and

(2) For raceways, providing devices or structures designed for the control of water level; and with respect to nursery crops, placing containerized stock in a raised area above expected flood level and providing draining facilities, such as drainage ditches or tile, gravel, cinder, or sand base.

*FSA* means the Farm Service Agency.

*Good nursery growing practices* means utilizing flood prevention, growing media, fertilization to obtain expected production results, irrigation, insect and disease control, weed, rodent and wildlife control, and over winterization storage facilities.

*Growing media* means:

(1) For aquacultural species, media that provides nutrients necessary for the production of the aquacultural species and protects the aquacultural species from harmful species or chemicals;

(2) For nursery crops, media designed to prevent ''root rot'' and other media related problems through a well-drained media with a minimum 20 percent air pore space and pH adjustment for the type of plant produced.

*Harvested* means:

(1) For insured and uninsured crops, *harvested* as defined according to the applicable crop insurance policy;

(2) For non-insurable single harvest crops, that a crop has been removed from the field, either by hand or mechanically, or by grazing of livestock;

(3) For non-insurable crops with potential multiple harvests in 1 year or harvested over multiple years, that the producer has, by hand or mechanically, removed at least one mature crop from the field during the crop year:

(4) For mechanically-harvested non-insurable crops, that the crop has been removed from the field and placed in a truck or other conveyance, except hay is considered harvested when in the bale, whether removed from the field or not. Grazed land will not be considered harvested for the purpose of determining an unharvested or prevented planting payment factor.

*Historic yield* means, for a unit, the higher of the county average yield or the producer's approved yield.

(1) An insured participant's yield shall be the higher of the county average yield listed on the crop table or the approved federal crop insurance APH, for the disaster year.

(2) NAP participant's yield shall be the higher of the county average yield as listed on the crop table or approved NAP APH for the disaster year.

(3) Participants without federal crop insurance or NAP coverage for the disaster year shall be assigned the county average listed on the crop table.

*Insurance is available* means when crop information is contained in RMA's county actuarial documents for a particular crop and a policy can be obtained through the RMA system, except, if the Group Risk Plan or Adjusted Gross Revenue Plan of crop insurance was the only plan of insurance available for the crop in the county in the applicable crop year, insurance is considered not available for that crop.

*Insured crops* means those crops covered by crop insurance pursuant to Chapter IV of this title and for which the producer purchased either the catastrophic or buy-up level of crop insurance so available.

*Limited coverage* means plans of insurance established by FCIC that provides coverage comparable to a level for a single crop that is equal to or greater than 50 percent of the approved yield indemnified at 100 percent of the expected market price, but less than 65 percent of the approved yield indemnified at 100 percent of the expected market price.

*Maximum loss level* means the maximum level of crop loss to be applied to a producer without acceptable production records. Loss levels are expressed in either a percent of loss or yield per acre, and should reflect the amount of production that a producer should have made considering the eligible disaster conditions in the area or county, as determined by the county committee in accordance with instructions issued by the Deputy Administrator.

*Multi-use crop* means a crop intended for more than one end use during the calendar year such as grass harvested for seed, hay, and grazing.

*Multiple cropping* means the planting of two or more different crops on the same acreage for harvest within the same crop year.

*Multiple planting* means the planting for harvest of the same crop in more than one planting period in a crop year on different acreage.

*NASS* means the National Agricultural Statistics Service.

*Net crop insurance indemnity* means the indemnity minus the producer paid premium.

*Non-insurable crop* means a crop for which FCIC crop insurance was not available.

*Normal mortality* means the percentage of dead aquaculture species that would normally occur during the crop year.

*Person* means person as defined in part 1400 of this chapter, and all rules with respect to the determination of a person found in that part shall be applicable to this part. However, the determinations made in this part in accordance with 7 CFR part 1400, subpart B, Person Determinations, shall also take into account any affiliation with any entity in which an individual or entity has an interest, irrespective of whether or not such entities are considered to be engaged in farming.

*Planted acreage* means land in which seed, plants, or trees have been placed, appropriate for the crop and planting method, at a correct depth, into a seed bed that has been properly prepared for the planting method and production practice normal to the area as determined by the county committee.

*Prevented planting* means the inability to plant an eligible crop with proper equipment during the planting period as a result of an eligible cause of loss, as determined by CCC, according to § 1479.115.

*Production* means quantity of the crop or commodity produced expressed in a specific unit of measure such as bushels, pounds, etc.

*Rate* means price per unit of the crop or commodity.

*Related condition* means, with respect to a disaster, a condition that causes deterioration of a crop, such as insect infestation, plant disease, or aflatoxin, that is accelerated or exacerbated as a result of damaging weather, as determined in accordance with instructions issued by the Deputy Administrator.

*Reliable production records* means evidence provided by the producer that is used to substantiate the amount of production reported when verifiable records are not available, including copies of receipts, ledgers of income, income statements of deposit slips, register tapes, invoices for custom harvesting, and records to verify production costs, contemporaneous measurements, truck scale tickets, and contemporaneous diaries that are determined acceptable by the county committee.

*Repeat crop* means with respect to a producer's production, a commodity that is planted or prevented from being planted in more than one planting period on the same acreage in the same crop year.

*RMA* means the Risk Management Agency.

*Salvage value* means the dollar amount or equivalent for the quantity of the commodity that cannot be marketed or sold in any recognized market for the crop.

*Secondary use* means the harvesting of a crop for a use other than the intended use, except for crops with intended use of grain, but harvested as silage, ensilage, cobbage, hay, cracked, rolled, or crimped.

*Secondary use value* means the value determined by multiplying the quantity of secondary use times the CCC-established price for this use.

*State committee* means the FSA State committee.

*Uninsured crop* means a crop for which Federal crop insurance was available, but the producer did not purchase insurance.

*Unit* means, unless otherwise determined by the Deputy Administrator, *basic unit* as described in part 457 of this title that, for ornamental nursery production, shall include all eligible plant species and sizes.

*Unit of measure* means:

(1) For all insured and uninsured crops, the FCIC-established unit of measure;

(2) For all non-insurable crops, the established unit of measure, if available, used for the 2003, 2004, or 2005 Noninsured Crop Assistance Program price and yield;

(3) For aquaculture species, a standard unit of measure such as gallons, pounds, inches or pieces, established by the State committee for all aquaculture species or varieties;

(4) For turf-grass sod, a square yard;

(5) For maple sap, a gallon; and

(6) For all other crops, the smallest unit of measure that lends itself to the greatest level of accuracy with minimal use of fractions, as determined by the State committee.

*United States* means all 50 States of the United States, the Commonwealth of Puerto Rico, the Virgin Islands of the United States, and to the extent the Deputy Administrator determines it to be feasible and appropriate, Guam, American Samoa, the Commonwealth of the Northern Mariana Islands and the former Trust Territory of the Pacific Islands, which include Palau, Federated States of Micronesia and the Marshall Islands.

*USDA* means United States Department of Agriculture.

*Value-loss crop* has the meaning assigned in part 1437 of this chapter.

*Verifiable production record* means evidence that is used to substantiate the amount of production reported and that can be verified by CCC through an independent source.

*Yield* means unit of production, measured in bushels, pounds, etc., per area of consideration, usually measured in acres.

**§ 1479.103 Producer eligibility.**

(a) Producers in the United States will be eligible to receive disaster benefits under this part only if they have suffered losses of eligible crops in 2003, 2004, or 2005, as further specified in this part, as a result of a disaster or related condition. Producers may not receive benefits with respect to volunteer stands of crops.

(b) Payments may be made for losses suffered by an eligible producer who is now deceased or is a dissolved entity if a representative who currently has authority to enter into a contract for the producer signs the application for payment. Proof of authority to sign for the deceased producer or dissolved entity must be provided. If a producer is now a dissolved general partnership or joint venture, all members of the general partnership or joint venture at the time of dissolution or their duly authorized representatives must sign the application for payment.

(c) As a condition to receive benefits under this part, a producer must have been in compliance with the Highly Erodible Land Conservation and Wetland Conservation provisions of 7 CFR part 12 for the 2003, 2004, or 2005 crop year, as applicable, and must not otherwise be barred from receiving benefits under 7 CFR part 12 or any other law.

**§ 1479.104 Time for filing application.**

Applications for benefits under the 2003, 2004, or 2005 Crop Disaster Program must be filed in the FSA county office in the producer's control county before the close of business on August 1, 2005, or such other date that may be announced by the Deputy Administrator.

**§ 1479.105 Limitations on payments and other benefits.**

(a) Except with respect to certain claims in Virginia and North Carolina, as specified in §§ 1479.121 and 1479.122, a producer may receive disaster benefits for crop losses for only one of the 2003, 2004, or 2005 crop years as specified under this part.

(b) Payments will not be made under this part for grazing losses.

(c) CCC may divide and classify crops based on loss susceptibility, yield, and other factors.

(d) No person, as defined by part 1400 subpart B of this chapter, shall receive more than a total of $80,000 in disaster benefits under this part, unless otherwise specified.

(e) No producer shall receive disaster benefits under this part in an amount that exceeds 95 percent of the value of the expected production for the relevant period as determined by CCC. The sum of the value of the crop not lost, if any; the disaster payment received under this part; and any crop insurance payment or payments received under the NAP for losses to the same crop, cannot exceed 95 percent of what the crop's value would have been if there had been no loss.

(f) An individual or entity whose adjusted gross income is in excess of $2.5 million, as defined by and determined under part 1400 subpart G of this chapter, shall not be eligible to receive disaster benefits under this part.

(g) Any person who received any payments from Section 32 of the Act of August 25, 1935, with respect to any 2004 hurricane losses, is not eligible for any payments under this part.

**§ 1479.106 Requirement to purchase crop insurance and non-insurable coverage.**

(a) Except as provided further in this section, any producer who elected not

to purchase crop insurance on an insurable 2003, 2004, or 2005 crop for which the producer receives crop loss assistance or, for non-insurable crops, elected not to participate in NAP for the year for which benefits are received must purchase:

(1) Crop insurance with additional coverage on that crop for each of the next 2 crop years, as applicable, for the insurable crops.

(2) NAP coverage by paying the administrative fee by the applicable State filing deadline and complete all required program requirements, including yearly acreage reports, for the non-insurable crop for each of the next 2 crop years, as applicable, for the non-insurable crops.

(b) If, at the time the producer applies for the CDP and benefits under §§ 1479.121 or 1479.122, the sales closing date for next year's insurable crops, or for the next year's non-insurable crops for which the producer sought benefits under this part has passed, the producer must purchase a crop insurance policy or obtain NAP coverage, as applicable, for the next available 2 crop years.

(c) If any producer fails to purchase crop insurance or NAP, as required in paragraph (a) or (b) of this section, the producer shall reimburse CCC for the full amount of the assistance, plus interest, provided to the producer under this part.

**§ 1479.107 Miscellaneous provisions.**

(a) A person shall be ineligible to receive disaster assistance under this part if it is determined by the State or county committee or an official of FSA that such person has:

(1) Adopted any scheme or other device that tends to defeat the purpose of a program operated under this part;

(2) Made any fraudulent representation with respect to such program; or

(3) Misrepresented any fact affecting a program determination.

(b) All persons with a financial interest in the operation receiving benefits under this part shall be jointly and severally liable for any refund, including related charges, which is determined to be due CCC for any reason under this part.

(c) In the event that any request for assistance or payment under this part was established as a result of erroneous information or a miscalculation, the assistance or payment shall be recalculated and any excess refunded to CCC with applicable interest.

(d) The liability of any person for any penalty or sanction under or in connection with this part, or for any refund to CCC or related charge arising in connection therewith, shall be in addition to any other liability of such person under any civil or criminal fraud statute or any other provision of law including, but not limited to: 18 U.S.C. 286, 287, 371, 641, 651, 1001 and 1014; 15 U.S.C. 714m; and 31 U.S.C. 3729.

(e) Any person who is dissatisfied with a determination made with respect to this part may make a request for reconsideration or appeal of such determination in accordance with the regulations set forth in parts 11 and 780 of this title.

(f) Any payment or portion thereof to any person shall be made without regard to questions of title under State law and without regard to any claim or lien against the crop, or proceeds thereof.

(g) For the purposes of 28 U.S.C. 3201(e), CCC waives the restriction on receipt of funds or benefits under this program but only as to beneficiaries who as a condition of such waiver agree to apply the benefits received under this part to reduce the amount of the judgment lien.

**§ 1479.108 Additional general provisions.**

(a) For calculations of loss made with respect to insured crops, the producer's existing unit structure will be used as the basis for the calculation and may include optional units established in accordance with part 457 of this title. Insured crops may have basic units established if the existing unit structure is based on enterprise units or whole county units or written agreements. For uninsured and non-insurable crops, basic units will be established for these purposes.

(b) County average yield for loss calculations will be the average of the 1998 through 2002 official county yields established by CCC, excluding the years with the highest and lowest yields, respectively.

(c) County committees will assign production or reduce the historic yield when the county committee determines:

(1) An acceptable appraisal or record of harvested production does not exist;

(2) The loss is due to an ineligible cause of loss or practices, soil type, climate, or other environmental factors, that cause lower yields than those upon which the historic yield is based;

(3) The producer has a contract providing a guaranteed payment for all or a portion of the crop; or

(4) The crop is planted beyond the normal planting period for the crop.

(d) The county committee shall establish a maximum loss level that should reflect the amount of production producers should have produced considering the eligible disaster conditions in the area or county for the same crop. The maximum loss level for the county shall be expressed as either a percent of loss or yield per acre. The maximum loss level will apply when:

(1) Unharvested acreage has not been appraised by FSA, or a company reinsured by FCIC; or

(2) Acceptable production records for harvested acres are not available from any source.

(e) Assigned production or reduced yield for practices that result in lower yields than those for which the historic yield is based shall be established based on the acres found to have been subjected to those practices.

(f) Assigned production for crops planted beyond the normal planting period for the crop shall be calculated according to the lateness of planting the crop. With the exception of replanted crops, if the crop is planted after the final planting date by:

(1) Up to and including 10 calendar days, the assigned production reduction will be based on one percent of the payment yield for each day involved;

(2) Eleven (11) through 24 calendar days, the assigned production reduction will be based on 10 percent of the payment yield plus an additional two percent reduction of the payment yield for each day of days 11 through 24 that are involved; and

(3) Twenty-five (25) or more calendar days or a date from which the crop would not reasonably be expected to mature by harvest, the assigned production reduction will be based on 50 percent of the payment yield or such greater amount determined by the county committee to be appropriate.

(4) CCC may adjust items 1 through 3 to make a comparable assignment for short rotation crops such as vegetables that may have a 30-day growing period.

(g) Assigned production for producers with contracts to receive a guaranteed payment for production of an eligible crop will be established by the county committee by:

(1) Determining the total amount of guaranteed payment for the unit;

(2) Converting the guaranteed payment to guaranteed production by dividing the total amount of guaranteed payment by the approved county price for the crop or variety or such other factor deemed appropriate if otherwise the production would appear to be too high; and

(3) Establishing the production for the unit as the greater of the actual net production for the unit or the guaranteed payment, or combination thereof if greater.

**§ 1479.109 Eligible disaster conditions.**

(a) Except as provided in paragraphs (b) and (c) of this section, this part applies to losses where the crop could not be planted or crop production, both in quantity and quality, was adversely affected by disasters as defined in § 1479.102, or:

(1) Insect infestation as a related condition to damaging weather if documented by COC with published data;

(2) Disease as a related condition to damaging weather;

(3) Salt water intrusion of an irrigation supply;

(4) Irrigation water rationing if proof is provided that water was rationed by a Government entity or water district (unless the producer was compensated by the Government entity or water district for a disaster or conservation purpose);

(5) Lack of water supply due to drought conditions for irrigated crops;

(6) Other weather-related factors as determined by the Deputy Administrator.

(b) Qualifying crop losses for the 2005 crop are limited to only those losses caused by a hurricane or tropical storm of the 2004 hurricane season in counties declared disaster areas by the President.

(c) Disaster benefits will not be available under this part if the crop could not be planted or crop production, both in quantity and quality, was adversely affected by:

(1) Poor farming practices;

(2) Poor management decisions; or

(3) Drifting herbicides.

**§ 1479.110 Qualifying 2003, 2004, or 2005-crop losses.**

(a) To receive disaster benefits under this part, the county committee must determine that because of an eligible disaster condition, the producer with respect to the 2003, 2004, or 2005 crop year:

(1) Was prevented from planting a crop;

(2) Sustained a loss in excess of 35 percent of the expected production of a crop; or

(3) Sustained a loss in excess of 35 percent of the value for value loss crops.

(b) Calculation of benefits under this part shall not include losses:

(1) That are the result of poor management decisions, poor farming practices, or drifting herbicides as determined by the county committee on a case-by-case basis;

(2) That are the result of the failure of the producer to re-seed or replant to the same crop in the county where it is customary to re-seed or replant after a loss;

(3) That are not as a result of a damaging weather or a weather related condition;

(4) To crops not intended for harvest in crop year 2003, 2004, or 2005;

(5) To losses of by-products resulting from processing or harvesting a crop, such as cottonseed, peanut shells, wheat or oat straw;

(6) To home gardens;

(7) That are a result of water contained or released by any governmental, public, or private dam or reservoir project if an easement exists on the acreage affected for the containment or release of the water; or

(8) If losses could be attributed to conditions occurring outside of the applicable crop year growing season.

(c) Calculation of benefits under this part for ornamental nursery stock shall not include losses:

(1) Caused by a failure of power supply or brownouts;

(2) Caused by the inability to market nursery stock as a result of quarantine, boycott, or refusal of a buyer to accept production;

(3) Caused by fire;

(4) Affecting crops where weeds and other forms of undergrowth in the vicinity of the nursery stock that have not been controlled; or

(5) Caused by the collapse or failure of buildings or structures.

(d) Calculation of benefits under this part for honey where the honey production by colonies or bees was diminished shall not include losses:

(1) Where the inability to extract was due to the unavailability of equipment; the collapse or failure of equipment or apparatus used in the honey operation;

(2) Resulting from improper storage of honey;

(3) To honey production because of bee feeding;

(4) Caused by the application of chemicals;

(5) Caused by theft, fire, or vandalism;

(6) Caused by the movement of bees by the producer or any other person;

(7) Due to disease or pest infestation of the colonies; or

(e) Loss calculations shall take into account other conditions and adjustments provided for in this part.

**§ 1479.111 Rates and yields; calculating payments.**

(a)(1) Payments made under this part to a producer for a loss on a unit with respect to yield based crops are determined by multiplying the payment rate established for the crop by CCC, times the loss of production which exceeds 35 percent of the expected production, as determined by CCC, of the unit.

(2) Payments made under this part to a producer for a loss on a unit with respect to value-based crops are determined by multiplying the payment rate established for the crop by CCC times the loss of value that exceeds 35 percent of the expected production value, as determined by CCC, of the unit.

(3) Payments made under this part may be adjusted by CCC to reflect losses due to quality factors adversely affected by a disaster. For FSA price support loan commodities, production to count may be reduced using the schedule of premiums and discounts for FSA commodity loans. Additional quality loss adjustments may be made for single market crops, using a 20 percent quality loss threshold. The quality loss threshold may be determined by multiplying: 65 percent of the affected quantity, times 65 percent of the result of subtracting: the value of the crop due to the effects of the disaster, as determined by CCC, from the value of the crop if it had not been affected by the disaster, as determined by CCC. Quality adjustments for multiple market crops sold to a lower priced market as a result of poor quality will be determined by using the difference between the average market price for the intended use and the average market price for the actual use, as determined by CCC.

(b) Payment rates for 2003, 2004, or 2005 year crop losses shall be:

(1) 65 percent of the maximum established RMA price for insured crops;

(2) 65 percent of the State average price for non-insurable crops; and

(3) 60 percent of the maximum established RMA price for uninsured crops.

(c) Except as provided elsewhere in this part, disaster benefits under this part for losses to crops shall be paid in an amount determined by multiplying the loss of production in excess of 35 percent of the expected production by the applicable payment rate established according to paragraph (a) of this section.

(d) Separate payment rates and yields for the same crop may be established by the county committee as authorized by the Deputy Administrator, when there is supporting data from NASS or other sources approved by CCC that show there is a significant difference in yield or value based on a distinct and separate end use of the crop. In spite of differences in yield or values, separate rates or yields shall not be established for crops with different cultural practices, such as organically or hydroponically grown.

(e) Production from all end uses of a multi-use crop or all secondary uses for multiple market crops will be calculated separately and summarized together.

(f) Each eligible producer's share of a disaster payment shall be based on the producer's share of the crop or crop proceeds, or, if no crop was produced, the share the producer would have received if the crop had been produced.

(g) When calculating a payment for a unit loss:

(1) An unharvested payment factor shall be applied to crop acreage planted but not harvested;

(2) A prevented planting factor shall be applied to any prevented planted acreage eligible for payment; and

(3) Unharvested payment factors may be adjusted if costs normally associated with growing the crop are not incurred.

**§ 1479.112 Production losses, producer responsibility.**

(a) Where available and determined accurate, RMA loss records will be used for insured crops.

(b) If RMA loss records are not available, or if the FSA county committee determines the RMA loss records are inaccurate or incomplete, or if the FSA county committee makes inquiry, producers are responsible for:

(1) Retaining or providing, when required, the best verifiable or reliable production records available for the crop;

(2) Summarizing all the production evidence;

(3) Accounting for the total amount of unit production for the crop, whether or not records reflect this production;

(4) Providing the information in a manner that can be easily understood by the county committee; and

(5) Providing supporting documentation if the county committee has reason to question the disaster event or that all production has been accounted for.

(c) In determining production under this section, the producer must supply verifiable or reliable production records to substantiate production to the county committee. If the eligible crop was sold or otherwise disposed of through commercial channels, production records include: Commercial receipts; settlement sheets; warehouse ledger sheets; or load summaries; appraisal information from a loss adjuster acceptable to CCC. If the eligible crop was farm-stored, sold, fed to livestock, or disposed of in means other than commercial channels, production records for these purposes include: Truck scale tickets; appraisal information from a loss adjuster acceptable to CCC; contemporaneous diaries; or other documentary evidence, such as contemporaneous measurements.

(d) Producers must provide all records for any production of a crop that is grown with an arrangement, agreement, or contract for guaranteed payment.

**§ 1479.113 Determination of production.**

(a) Production under this part shall include all harvested production, unharvested appraised production and assigned production for the total planted acreage of the crop on the unit.

(b) The harvested production of eligible crop acreage harvested more than once in a crop year shall include the total harvested production from all these harvests.

(c) If a crop is appraised and subsequently harvested as the intended use, the actual harvested production shall be used to determine benefits.

(d) For all crops eligible for loan deficiency payments or marketing assistance loans with an intended use of grain but harvested as silage, ensilage, cobbage, hay, cracked, rolled, or crimped, production will be adjusted based on a whole grain equivalent as established by CCC.

(e) For crops with an established yield and market price for multiple intended uses, a value will be calculated for each use with:

(1) The intended use or uses for disaster purposes based on historical production and acreage evidence provided by the producer; and

(2) The eligible acres for each use and the calculation of the disaster payment will be determined by the county committee according to instructions issued by the Deputy Administrator.

(f) For crops sold in a market that is not a recognized market for the crop with no established county average yield and market price, 60 percent of the salvage value received will be deducted from the disaster payment.

(g) If a producer does not receive compensation based upon the quantity of the commodity delivered to a purchaser, but has an agreement or contract for guaranteed payment for production, for purposes of determination the production shall be the greater of the actual production or the guaranteed payment converted to production as determined by CCC.

(h) Production that is commingled between units before it was a matter or combination of record and cannot be separated by using records or other means acceptable to CCC shall be prorated to each respective unit by CCC. Commingled production may be attributed to the applicable unit, if the producer made the unit production of a commodity a matter of record before commingling and does any of the following, as applicable:

(1) Provides copies of verifiable documents showing that production of the commodity was purchased, acquired, or otherwise obtained from beyond the unit;

(2) Had the production measured in a manner acceptable to the county committee; or

(3) Had the current year's production appraised in a manner acceptable to the county committee.

(i) The county committee shall assign production for the unit when the county committee determines that:

(1) The producer has failed to provide adequate and acceptable production records;

(2) The loss to the crop is because of a disaster condition not covered by this part, or circumstances other than natural disaster, and there has not otherwise been an accounting of this ineligible cause of loss;

(3) The producer carries out a practice, such as multiple cropping, that generally results in lower yields than the established historic yields;

(4) The producer has a contract to receive a guaranteed payment for all or a portion of the crop.

(5) A crop was late-planted;

(6) Unharvested acreage was not timely appraised; or

(7) Other appropriate causes exist for such assignment as determined by the Deputy Administrator.

(j) For peanuts, the actual production shall be all peanuts harvested for nuts, regardless of their disposition or use, as adjusted for low quality.

(k) For tobacco, except flue-cured and burley, the actual production shall be the sum of the tobacco: marketed or available to be marketed; destroyed after harvest; and produced but unharvested, as determined by an appraisal. For flue-cured and burley tobacco, the actual production shall be the sum of the tobacco: marketed, regardless of whether the tobacco was produced in the current crop year or a prior crop year; on hand; destroyed after harvest; and produced but unharvested, as determined by an appraisal.

**§ 1479.114 Calculation of acreage for crop losses other than prevented planted.**

(a) Acreage shall be calculated using the number of acres shown to have been planted to a crop.

(b) In cases where there is a repeat crop or a multiple planted crop in more than one planting period, or if there is multiple cropped acreage meeting criteria established in paragraph (c) or (d) of this section, each of these crops

may be considered separate crops for 2003, 2004, or 2005 CDP if the county committee determines that all of the following conditions are met:

(1) Both the initial and subsequent planted crops were planted with the intent to harvest;

(2) Both the initial and subsequent planted crops were planted within the normal planting period for that crop;

(3) Both the initial and subsequent planted crops meet all other eligibility provisions of this part including good farming practices; and

(4) Each planting could reach maturity if each planting was harvested or would have been harvested.

(c) In cases where there is multiple-cropped acreage, each crop may be eligible for disaster assistance separately if both of the following conditions are met:

(1) The specific crops are approved by the State Committee as eligible multiple-cropping practices in accordance with procedures approved by the Deputy Administrator; and

(2) The farm containing the multiple-cropped acreage has a history of successful multiple cropping based on timely filed crop acreage reports.

(d) Producers with multiple-cropped acreage not meeting the criteria in paragraph (c) of this section may be eligible for disaster assistance on more than one crop if the producer has verifiable records establishing a history of carrying out a successful multiple-cropping practice on the specific crops for which assistance is requested. All required records acceptable to CCC as determined by the Deputy Administrator must be provided before payments are issued.

(e) Producers with multiple-cropped acreage not meeting the criteria in paragraphs (c) or (d) of this section must select the crop for which assistance will be requested. If more than one producer has an interest in the multiple cropped acreage, all producers must agree to the crop designated for payment by the end of the application period or no payment will be approved for any crop on the multiple-cropped acreage.

(f) Benefits under this part shall apply to irrigated crops where the acreage was affected by a lack of water or contamination by saltwater intrusion of an irrigation supply resulting from drought conditions.

**§ 1479.115 Calculation of prevented planted acreage.**

(a) When determining losses under this part, prevented-planted acreage will be considered separately from planted acreage of the same crop.

(b) Except as provided in paragraph (c) of this section, for insured crops, disaster payments under this part for prevented-planted acreage shall not be made unless RMA documentation indicates that the eligible producer received a prevented planting payment under the RMA-administered program.

(c) For insured crops, disaster payments under this part for prevented-planted acreage will be made available for the following crops for which prevented planting coverage was not available and for which the county committee will make an eligibility determination according to paragraph (d) of this section: peppers; sweet corn (fresh market); tomatoes (fresh market); tomatoes (processing).

(d) The producer must prove, to the satisfaction of the county committee, an intent to plant the crop and that such crop could not be planted because of an eligible disaster. The county committee must be able to determine the producer was prevented from planting the crop by an eligible disaster that:

(1) Prevented other producers from planting on acreage with similar characteristics in the surrounding area; and

(2) Occurred after the previous planting period for the crop.

(3) Unless otherwise approved by the Deputy Administrator, began no earlier than the planting season for that crop.

(e) Prevented planted disaster benefits under this part shall not apply to:

(1) Aquaculture, including ornamental fish; perennial forage crops grown for hay, seed, or grazing; honey; maple sap; millet; mint; nursery crops; cultivated wild rice; fresh market beans; cabbage, pumpkins, sweet potatoes; winter squash, tobacco, turf grass sod, and vine crops;

(2) Uninsured crop acreage that is unclassified for insurance purposes;

(3) Acreage that is used for conservation purposes or intended to be left unplanted under any CCC or USDA program;

(4) Any acreage on which a crop other than a cover crop was harvested, hayed, or grazed during the crop year;

(5) Any acreage for which a cash lease payment is received for the use of the acreage the same crop year unless the county committee determines the lease was for haying and grazing rights only and was not a lease for use of the land;

(6) Acreage for which planting history or conservation plans indicate that the acreage would have remained fallow for crop rotation purposes;

(7) Acreage for which the producer or any other person received a prevented planted payment for any crop for the same acreage, excluding share arrangements;

(8) Acreage for which the producer cannot provide proof to the county committee that inputs such as seed, chemicals, and fertilizer were available to plant and produce a crop with the expectation of producing at least a normal yield; and

(9) Any other acreage for which, for whatever reason, there is cause to question whether the crop could have been planted for a successful and timely harvest, or for which prevented planting credit is not allowed under the provisions of this part.

(f) Prevented planting payments are not provided on acreage that had either a previous or subsequent crop planted in the same crop year on the acreage, unless the county committee determines that all of the following conditions are met:

(1) There is an established practice of planting two or more crops for harvest on the same acreage in the same crop year;

(2) Both crops could have reached maturity if each planting was harvested or would have been harvested;

(3) Both the initial and subsequent planted crops were planted or prevented-planting within the normal planting period for that crop;

(4) Both the initial and subsequent planted crops meet all other eligibility provisions of this part including good farming practices; and

(5) The specific crops meet the eligibility criteria for a separate crop designation as a repeat or approved multiple cropping practice set out in § 1479.114.

(g)(1) Disaster benefits under this part shall not apply to crops where the prevented-planted acreage was affected by a disaster that was caused by drought unless on the final planting date or the late planting period for non-irrigated acreage, the area that was prevented from being planted had insufficient soil moisture for germination of seed and progress toward crop maturity because of a prolonged period of dry weather;

(2) Verifiable information collected by sources whose business or purpose to record weather conditions, including but not limited to the local weather reporting stations of the U.S. National Weather Service.

(h) Prevented planting benefits under this part shall apply to irrigated crops where the acreage was prevented from being planted due to a lack of water resulting from drought conditions or contamination by saltwater intrusion of an irrigation supply resulting from drought conditions.

(i) For uninsured or non-insurable crops and the insured crops listed in

paragraph (c) of this section, for prevented planting purposes:

(1) The maximum prevented-planted acreage for all crops cannot exceed the number of acres of cropland in the unit for the crop year and will be reduced by the number of acres planted in the unit;

(2) The maximum prevented planted acreage for a crop cannot exceed the number of acres planted by the producer, or that was prevented from being planted, to the crop in any 1 of the 4 crop years previous to the disaster year as determined by the county committee;

(3) For crops grown under a contract specifying the number of acres contracted, the prevented-planted acreage is limited to the result of the number of acres specified in the contract minus planted acreage;

(4) For each crop type or variety for which separate prices or yields are sought for prevented-planted acreage, the producer must provide evidence that the claimed prevented-planted acres were successfully planted in at least 1 of the most recent 4 crop years; and

(5) The prevented planted acreage must be at least 20 acres or 20 percent of the intended planted acreage in the unit, whichever is less.

(j) Notwithstanding the provisions of part 718 of this chapter, late-filed crop acreage reports for previous years shall not be accepted for CDP purposes.

**§ 1479.116 Quantity adjustments for diminished quality for certain crops.**

(a) For the crops identified in paragraph (b) of this section, subject to this part, the quantity of production of crops of the producer shall be adjusted to reflect diminished quality resulting from the disaster.

(b) Crops eligible for quality adjustments to production are limited to:

(1) Barley; canola; corn; cotton; crambe, flaxseed; grain sorghum; mustard seed; oats; peanuts; rapeseed; rice; safflower; soybeans; sugar beets; sunflower-oil; sunflower-seed; tobacco; wheat; and

(2) Crops with multiple market uses such as fresh, processed or juice, as supported by NASS data or other data as CCC determines acceptable.

(c) The producer must submit verifiable documentation for determining the grade and other discount factors that were applied to the crop.

(d) Quality adjustments will be applied to crops experiencing at least a 20 percent loss after production has been adjusted to standard moisture, when applicable.

(e) For all crops listed in paragraph (b)(1) of this section, except for cotton, if a quality adjustment has been made for multi-peril crop insurance purposes, an additional adjustment will not be made.

(f) Quality adjustments for crops other than cotton, peanuts, sugar beets, and tobacco listed in paragraph (b)(1) of this section may be made by applying an adjustment factor based on dividing the CCC marketing assistance loan rate applicable to the crop and producer determined according to part 1421 of this chapter by the unadjusted county marketing assistance loan rate for the crop. For crops that receive a grade of ''sample'' and are marketed through normal channels, production will be adjusted as determined by CCC. County committees may, with state committee concurrence, establish county average quality adjustment factors.

(g) Quality adjustments for cotton shall be based on the difference between:

(1) The loan rate applicable to the crop and producer determined according to part 1427 of this chapter; and

(2) The adjusted county loan rate. The adjusted county rate is the county loan rate adjusted for the 5-year county average historical quality premium or discount, as determined by CCC.

(h) For 2003, 2004, and 2005 peanuts, quality adjustments shall be based on the difference between the actual sales price, or other proceeds, received and the price announced by CCC under section 1421.10 of part 1421 of this chapter, by type of peanut for the applicable crop year.

(i) Quality adjustments for crops with multiple market uses such as fresh, processed and juice, shall be applied based on the difference between the producer's historical marketing percentage of each market use compared to the actual percentage for the 2003, 2004, or 2005 crop year. These quality adjustments are built into the production loss determination. Production determinations from Federal crop insurance will not be used.

(j) Except as determined by the Deputy Administrator, quality adjustments for aflatoxin shall be based on the aflatoxin level. The producer must provide the county committee with proof of a price reduction because of aflatoxin. The aflatoxin level must be 20 parts per billion or more before a quality adjustment will be made. The quality adjustment factor applied to affected production is .50 if the production is marketable. If the production is unmarketable due to aflatoxin levels of at least 20 parts per billion, affected production will be adjusted to zero. Any value received will be considered salvage.

(k) Quality adjustments for sugar beets shall be based on sugar content. The actual production for the producer shall be adjusted upward or downward to account for sugar content as determined by CCC.

(l) Quality adjustments for tobacco in crops years 2003, 2004, or 2005 shall be based on the difference between the revenue received and the support price except that the market price may be used instead of the support price where there is no support price, or where market prices normally exceed the support price.

(m) Any quantity of the crop determined to be salvage will not be considered production. Salvage values shall be factored by 0.60 times the producer's share. This amount will be deducted from the disaster payment.

(n) Quantity adjustments for diminished quality under this section will not be applied to crops that are, under § 1479.117, value loss crops.

(o) Quantity adjustments for diminished quality shall also not apply under this section to: honey, maple sap, turf-grass sod, crops marketed for a use other than an intended use for which there is not an established county price or yield, or any other crop that the Deputy Administrator deems it appropriate to exclude.

**§ 1479.117 Value loss crops.**

(a) Irrespective of any inconsistent provisions in other sections, this section shall apply to the following crops, which are considered ''value loss crops'': ornamental nursery; Christmas trees; vegetable and root stock including ginseng root; aquaculture, including ornamental fish, and such other crops as may be determined appropriate for treatment as ''value loss crops.''

(b) For crops specified in paragraph (a) of this section, disaster benefits under this part are calculated based on the loss of value at the time of disaster, as determined by CCC.

(c) For aquaculture, disaster benefits under this part for aquacultural species are limited to those aquacultural species that were placed in the aquacultural facility by the producer. CDP benefits shall not be available for aquacultural species that are growing naturally in the aquaculture facility. Benefits under this part are limited to aquacultural species that were planted or seeded on property owned or leased by the producer where that land has readily identifiable boundaries, and over which the producer has total control of the waterbed and the ground under the

waterbed. Producers who only have control of the waterbed or the ground under the waterbed but not both will not be eligible for disaster benefits under this part.

(d) For ornamental nursery crops, disaster benefits under this part are limited to ornamental nursery crops that were grown in a container or controlled environment for commercial sale on property owned or leased by the producer, and cared for and managed using good nursery growing practices. Indigenous crops are not eligible for benefits under this part.

(e) For vegetable and root stock, disaster benefits under this part are limited to plants grown in a container or controlled environment for use as transplants or root stock by the producer for commercial sale on property owned or leased by the producer and managed using good rootstock or fruit and vegetable plant growing practices.

(f) For ginseng, only ginseng that meets all the requirements of cultivated ginseng shall be considered as eligible for benefits under this part. Ginseng is defined as cultivated ginseng roots and seeds that meet the following requirements:

(1) Grown in raised beds above and away from wet and low areas, and protected from flood;

(2) Grown under man-made canopies that provide 75 to 80 percent shade coverage;

(3) Grown in well drained media with a pH adjustment of at least 5.5 and which protects plants from disease; and

(4) Grown with sufficient fertility and weed control to obtain expected production results of ginseng root and seed.

(g) Evidence of the above ginseng practice requirements must be provided by the producer if requested by the county committee. Any ginseng that is grown under cultivated practices or simulated wild or woodland conditions that do not meet these requirements is not eligible for disaster assistance under this part.

(h) Because ginseng is a perennial crop, the producer must provide annual crop history to establish when the loss occurred and the extent of such loss. If the producer does not or is unable to provide annual records to establish the beginning inventory, before the loss, and ending inventory, after the loss, production shall be assigned by the county committee.

(i) Aside from differences provided for in this section, all other conditions for eligibility contained in this part shall be applied to value loss crops.

**§ 1479.118 Other provisions for specialty crops.**

(a) For turf-grass sod, disaster benefits under this part are limited to turf grass sod that would have matured and been harvested during 2003, 2004, or 2005, when a disaster caused in excess of 35 percent of the expected production to die.

(b) For honey, disaster benefits under this part are limited to table and non-table honey produced commercially for human consumption. For calculating benefits, all honey is considered a single crop, regardless of type or variety of floral source or intended use.

(c) For maple sap, disaster benefits under this part are limited to maple sap produced on private property in a controlled environment by a commercial operator for sale as sap or syrup. The maple sap must be produced from trees that are: located on land the producer controls by ownership or lease; managed for production of maple sap; and are at least 30 years old and 12 inches in diameter.

**§ 1479.119 2005-crop losses only.**

(a) Producers may be eligible for assistance under this part for 2005 crop losses in counties declared Presidential disaster areas due only to a hurricane or tropical storm that occurred during the 2004 hurricane season June 1 through November 30, 2004, as defined by the National Oceanic and Atmospheric Administration.

(b) All provisions of this part including linkage, AGI, conservation compliance, 95% payment cap and $80,000 payment limitation are applicable to such 2005-crop claims.

(c) Persons that received assistance under section 32 of the Act of August 25, 1935 for losses due to Hurricanes Charley, Frances and/or Jeanne are not eligible for assistance under this provision.

**§ 1479.120 Quality losses for 2003, 2004, and 2005 crops.**

(a) Subject to other provisions of this part, CCC funds shall be made available for assistance to producers determined eligible under this section for crop quality losses greater than 20 percent of the value the affected production of the crop would have had if the crop had not suffered a quality loss. The per unit amount of a quality loss for a producer's crop shall be equal to the difference between:

(1) The unit market value of the units of the crop affected by the quality loss had the crop not suffered a quality loss; and

(2) The per-unit market value of the units of the crop affected by the quality loss.

(b) The amount of payment for a quality loss shall be equal to 65 percent of the quantity of the crop affected by the quality loss, multiplied by 65 percent of the per unit quality loss for the crop as determined by the Deputy Administrator.

(c) This section will apply to all crops eligible for 2003, 2004, and 2005 crop disaster assistance under this part, and will apply to crop production that has a reduced economic value due to the reduction in quality.

(d) Persons may not be compensated under this section to the extent that such producers have received assistance under § 1479.116 through § 1479.118, or other provisions of this part, attributable in whole or in part to diminished quality.

**§ 1479.121 Virginia crop losses.**

(a) In addition to CDP benefits for 2004, or 2005, producers with crop losses located in the Commonwealth of Virginia may be eligible for disaster assistance for crop losses that resulted from hurricanes, tropical storms, and other weather related disasters that occurred during the calendar year 2003 only.

(b) $50 million will be available for such disaster assistance until expended.

(c) All provisions of this part limiting payments, including crop insurance and NAP purchase requirements, adjusted gross income provisions, conservation compliance, 95% payment cap related it expected revenue, and the $80,000 per person per year payment limitation are applicable to assistance received under this section.

**§ 1479.122 North Carolina fruit and vegetable crop losses.**

(a) In addition to CDP benefits for 2004 or 2005, but not both, producers with fruit and vegetable losses located in the State of North Carolina may be eligible for disaster assistance for these crop losses that resulted from hurricanes, tropical storms, and other weather related disasters that occurred during the 2003 calendar year only.

(b) $3 million will be available for such additional disaster assistance until expended.

(c) All provisions of this part limiting payments, including crop insurance and NAP purchase requirements, adjusted gross income provisions, conservation compliance, 95% payment cap related to expected revenue, and the $80,000 per person payment limitation, are applicable to assistance received under this section.

**§ 1479.123 Misrepresentation, and scheme or device.**

(a) A producer who is determined to have erroneously represented any fact affecting a program determination made in accordance with this part shall not be entitled to disaster payments and must refund all such payments received, plus interest as determined in accordance with part 1403 of this chapter.

(b) A producer shall refund to CCC all disaster payments, plus interest as determined in accordance with part 1403 of this chapter, received by such producer with respect to all applications under this part if the producer is determined to have knowingly done any of the following:

(1) Adopted any scheme or device that tends to defeat the purpose of the program;

(2) Made any fraudulent representation; or

(3) Misrepresented any fact affecting a program determination.

**§ 1479.124 Offsets, assignments, and debt settlement.**

(a) Except as provided in paragraph (b) of this section, any payment or portion thereof to any person shall be made without regard to questions of title under State law and without regard to any claim or lien against the crop, or proceeds thereof, in favor of the owner or any other creditor except agencies of the U.S. Government. The regulations governing offsets and withholdings found at part 1403 of this chapter apply to any payments made under this part.

(b) Any producer entitled to any payment may assign any payments in accordance with regulations governing the assignment of payments found at part 1404 of this chapter.

(c) A debt or claim may be settled according to part 1403 of this chapter.

**§ 1479.125 Compliance with highly erodible land and wetland conservation provisions.**

(a) The highly erodible land and wetland conservation provisions of part 12 of this title apply to the receipt of disaster assistance for 2003, 2004, and 2005 crop losses made available under this authority.

(b) All eligible producers must be in compliance with the highly erodible land and wetland conservation compliance provisions for the year(s) for which disaster assistance is requested.

Signed in Washington, DC March 23, 2005.

**Thomas B. Hofeller,**

*Acting Executive Vice-President, Commodity Credit Corporation.*

[FR Doc. 05–6080 Filed 3–28–05; 8:45 am]

BILLING CODE 3410–05–P

**DEPARTMENT OF THE TREASURY**

**Office of the Comptroller of the Currency**

**12 CFR Part 30**

**[Docket No. 05–07]**

**RIN 1557–AC92**

**FEDERAL RESERVE SYSTEM**

**12 CFR Parts 208 and 225**

**[Docket No. OP–1155]**

**FEDERAL DEPOSIT INSURANCE CORPORATION**

**12 CFR Part 364**

**DEPARTMENT OF THE TREASURY**

**Office of Thrift Supervision**

**12 CFR Parts 568 and 570**

**[No. 2005–11]**

**RIN 1550–AB97**

## Interagency Guidance on Response Programs for Unauthorized Access to Customer Information and Customer Notice

**AGENCIES:** Office of the Comptroller of the Currency, Treasury (OCC); Board of Governors of the Federal Reserve System (Board); Federal Deposit Insurance Corporation (FDIC); Office of Thrift Supervision, Treasury (OTS).

**ACTION:** Interpretive guidance and OTS final rule.

**SUMMARY:** The OCC, Board, FDIC, and OTS (the Agencies) are publishing an interpretation of the Gramm-Leach-Bliley Act (GLBA) and the Interagency Guidelines Establishing Information Security Standards (Security Guidelines).[1] This interpretive guidance, titled ''Interagency Guidance on Response Programs for Unauthorized Access to Customer Information and Customer Notice'' (final Guidance), is being published as a supplement to the Security Guidelines in the Code of Federal Regulations in order to make the interpretation more accessible to financial institutions and to the general public. The final Guidance will clarify the responsibilities of financial institutions under applicable Federal law. OTS is also making a conforming, technical change to its Security Procedures Rule.

**DATES:** Effective March 29, 2005.

**FOR FURTHER INFORMATION CONTACT:** *OCC:* Aida Plaza Carter, Director, Bank Information Technology, (202) 874–4740; Amy Friend, Assistant Chief Counsel, (202) 874–5200; or Deborah Katz, Senior Counsel, Legislative and Regulatory Activities Division, (202) 874–5090, at 250 E Street, SW., Washington, DC 20219.

*Board:* Donna L. Parker, Supervisory Financial Analyst, Division of Banking Supervision & Regulation, (202) 452–2614; or Joshua H. Kaplan, Attorney, Legal Division, (202) 452–2249, at 20th and C Streets, NW., Washington, DC 20551.

*FDIC:* Jeffrey M. Kopchik, Senior Policy Analyst, Division of Supervision and Consumer Protection, (202) 898–3872; Kathryn M. Weatherby, Examiner Specialist, Division of Supervision and Consumer Protection, (202) 898–6793; or Robert A. Patrick, Counsel, Legal Division, (202) 898–3757, at 550 17th Street, NW., Washington, DC 20429.

*OTS:* Lewis C. Angel, Program Manager, (202) 906–5645; Glenn Gimble, Senior Project Manager, Consumer Protection and Specialized Programs, (202) 906–7158; or Richard Bennett, Counsel, Regulations and Legislation Division, (202) 906–7409, at 1700 G Street, NW., Washington, DC 20552.

**SUPPLEMENTARY INFORMATION:** The contents of this preamble are listed in the following outline:

I. Introduction
II. Overview of Comments Received
III. Overview of Final Guidance
IV. Section-by-Section Analysis of the Comments Received
  A. The ''Background'' Section
  B. The ''Response Program'' Section
  C. The ''Customer Notice'' Section
V. Effective Date
VI. OTS Conforming and Technical Change
VII. Impact of Guidance
VIII. Regulatory Analysis
  A. Paperwork Reduction Act
  B. Regulatory Flexibility Act
  C. Executive Order 12866
  D. Unfunded Mandates Reform Act of 1995

## I. Introduction

The Agencies are jointly issuing final Guidance that interprets the requirements of section 501(b) of the GLBA, 15 U.S.C. 6801, and the Security Guidelines[2] to include the development

[1] This document renames the ''Interagency Guidelines Establishing Standards for Safeguarding Customer Information'' as the ''Interagency Guidelines Establishing Information Security Standards.'' Therefore, all other references in the Agencies' regulations to the former title of the Security Guidelines shall be read to refer to the new title.

[2] 12 CFR part 30, app. B (OCC); 12 CFR part 208, app. D–2, and part 225, app. F (Board); 12 CFR part 364, app. B (FDIC); and 12 CFR part 570, app. B (OTS). In this Guidance, citations to the Agencies'

and implementation of a response program to address unauthorized access to, or use of customer information that could result in substantial harm or inconvenience to a customer. The Guidance describes the appropriate elements of a financial institution's response program, including customer notification procedures.

Section 501(b) required the Agencies to establish standards for financial institutions relating to administrative, technical, and physical safeguards to: (1) Ensure the security and confidentiality of customer information; (2) protect against any anticipated threats or hazards to the security or integrity of such information; and (3) protect against unauthorized access to or use of such information that could result in substantial harm or inconvenience to any customer.

On February 1, 2001, the Agencies issued the Security Guidelines as required by section 501(b) (66 FR 8616). Among other things, the Security Guidelines direct financial institutions to: (1) Identify reasonably foreseeable internal and external threats that could result in unauthorized disclosure, misuse, alteration, or destruction of customer information or customer information systems; (2) assess the likelihood and potential damage of these threats, taking into consideration the sensitivity of customer information; and (3) assess the sufficiency of policies, procedures, customer information systems, and other arrangements in place to control risks.[3]

To address the need for additional interpretive guidance regarding section 501(b) and the Security Guidelines, on August 12, 2003, the Agencies published proposed Interagency Guidance on Response Programs for Unauthorized Access to Customer Information and Customer Notice (proposed Guidance) in the **Federal Register** (68 FR 47954). This proposed Guidance made clear that the Agencies expect a financial institution's information security program, required under the Security Guidelines, to include a response program.

The Agencies were interested in the public's views on the proposed Guidance and accordingly published it for comment.[4] The Agencies have used these comments to assess the impact of the proposed Guidance, and to address the requirements of the Paperwork Reduction Act of 1995 (44 U.S.C. 3501 *et seq.*).

## II. Overview of Comments Received

The Agencies invited comment on all aspects of the proposed Guidance and collectively received 65 comments on the proposed Guidance. In some instances, several commenters joined in filing a single comment. The commenters included 10 bank holding companies, eight financial institution trade associations, 25 financial institutions (including three Federal Reserve Banks), five consumer groups, three payment systems, three software companies, three non-financial institution business associations, three service providers, two credit unions, a member of Congress, a state office, a compliance officer, a security and risk consultant, a trademark protection service, and a trade association representing consumer reporting agencies.

Commenters generally agreed that financial institutions should have response programs. Indeed, many financial institutions said that they have such programs in place. Comments from consumer groups and the Congressman commended the Agencies for providing guidance on response programs and customer notification. However, most industry commenters thought that the proposed Guidance was too prescriptive. These commenters stated that the proposed approach would stifle innovation and retard the effective evolution of response programs. Industry commenters raised concerns that the proposed Guidance would not permit a financial institution to assess different situations from its own business perspective, specific to its size, operational and system structure, and risk tolerances. These industry commenters suggested modifying the proposed Guidance to give financial institutions greater discretion to determine how to respond to incidents of unauthorized access to or use of customer information.

Two commenters also requested that the Agencies include a transition period allowing adequate time for financial institutions to implement the final Guidance. Some commenters asked for a transition period only for the aspects of the final Guidance that address service provider arrangements.

## III. Overview of Final Guidance

The final Guidance states that every financial institution should develop and implement a response program designed to address incidents of unauthorized access to customer information maintained by the institution or its service provider. The final Guidance provides each financial institution with greater flexibility to design a risk-based response program tailored to the size, complexity and nature of its operations.

The final Guidance continues to highlight customer notice as a key feature of an institution's response program. However, in response to the comments received, the final Guidance modifies the standard describing when notice should be given and provides for a delay at the request of law enforcement. It also modifies which customers should be given notice, what a notice should contain, and how it should be delivered.

A more detailed discussion of the final Guidance and the manner in which it incorporates comments the Agencies received follows.

## IV. Section-by-Section Analysis of the Comments Received

### *A. The "Background" Section*

#### Legal Authority

Section I of the proposed Guidance described the legal authority for the Agencies' position that every financial institution should have a response program that includes measures to protect customer information maintained by the institution or its service providers. The proposed Guidance also stated that the Agencies expect customer notification to be a component of the response program.

One commenter questioned the Agencies' legal authority to issue the proposed Guidance. This commenter asserted that section 501(b) only authorizes the Agencies to establish standards requiring financial institutions to safeguard the confidentiality and integrity of customer information and to protect that information from unauthorized access, but does not authorize standards that would require a response to incidents where the security of customer information actually has been breached.

The final Guidance interprets those provisions of the Security Guidelines issued under the authority of section 501(b)(3) of the GLBA, which states specifically that the standards to be established by the Agencies must include various safeguards to protect against not only "unauthorized access to," but also the "use of," customer

Security Guidelines refer only to the appropriate paragraph number, as these numbers are common to each of the Guidelines.

[3] Security Guidelines, III.B.2.

[4] Under the Administrative Procedure Act (APA), an agency may dispense with public notice and an opportunity to comment for general statements of policy. 5 U.S.C. 553(b)(A). Therefore, notice and comment were not required under the APA for this final Guidance. OTS has concluded that notice and comment were also not required under the APA for its conforming and technical change as discussed in part VI of this **SUPPLEMENTARY INFORMATION**.

information that could result in ''substantial harm or inconvenience to any customer.'' This language authorizes standards that include response programs to address incidents of unauthorized access to customer information. A response program is the principal means for a financial institution to protect against unauthorized ''use'' of customer information that could lead to ''substantial harm or inconvenience'' to the institution's customer. For example, customer notification is an important tool that enables a customer to take steps to prevent identity theft, such as by arranging to have a fraud alert placed in his or her credit file. Accordingly, when evaluating the adequacy of an institution's information security program required by the Security Guidelines, the Agencies will consider whether the institution has developed and implemented a response program as described in the final Guidance.

Scope of Guidance

In a number of places throughout the proposed Guidance, the Agencies referenced definitions in the Security Guidelines. However, the Agencies did not specifically address the scope of the proposed Guidance. Commenters had questions and suggestions regarding the scope of the proposed Guidance and the meaning of terms used.

Entities and Information Covered

Some commenters had questions about the entities and information covered by the proposed Guidance. One commenter suggested that the Agencies clarify that foreign offices, branches, and affiliates of United States banks are not subject to the final Guidance. Some commenters recommended that the Agencies clarify that the final Guidance applies only to unauthorized access to sensitive information within the control of the financial institution. One commenter thought that the final Guidance should be broad and cover frauds committed against bank customers through the Internet, such as through the misuse of online corporate identities to defraud online banking customers through fake web sites (commonly known as ''phishing''). Several commenters requested confirmation in the final Guidance that it applies to consumer accounts and not to business and other commercial accounts.

For greater clarity, the Agencies have revised the Background section of the final Guidance to state that the scope and definitions of terms used in the Guidance are identical to those in section 501(b) of the GLBA and the Security Guidelines which largely cross-reference definitions used in the Agencies' Privacy Rules.[5] Therefore, consistent with section 501(b) and the Security Guidelines, this final Guidance applies to the entities enumerated in section 505(a) of the GLBA.[6] This final Guidance does not apply to a financial institution's foreign offices, branches, or affiliates. However, a financial institution subject to the Security Guidelines is responsible for the security of its customer information, whether the information is maintained within or outside of the United States, such as by a service provider located outside of the United States.

This final Guidance also applies to ''customer information,'' meaning any record containing ''nonpublic personal information'' (as that term is defined in § __.3(n) of the Agencies' Privacy Rules) about a financial institution's customer, whether in paper, electronic, or other form, *that is maintained by or on behalf of the institution*.[7] Consequently, the final Guidance applies only to information that is within the control of the institution and its service providers, and would not apply to information directly disclosed by a customer to a third party, for example, through a fraudulent Web site.

Moreover, this final Guidance does not apply to information involving business or commercial accounts. Instead, the final Guidance applies to nonpublic personal information about a ''customer'' within the meaning of the Security Guidelines, namely, a consumer who obtains a financial product or service from a financial institution to be used primarily for personal, family, or household purposes, and who has a continuing relationship with the institution.[8]

Effect of Other Laws

Several commenters requested that the Agencies explain how the final Guidance interacts with additional and possibly conflicting state law requirements. Most of these commenters urged that the final Guidance expressly preempt state law. By contrast, one commenter asked the Agencies to clarify that a financial institution must also comply with additional state law requirements. In addition, some commenters asked that the final Guidance provide a safe harbor defense against class action suits. They suggested that the safe harbor should cover any financial institution that takes reasonable steps that regulators require to protect customer information, but, nonetheless, experiences an event beyond its control that leads to the disclosure of customer information.

These issues do not fall within the scope of this final Guidance. The extent to which section 501(b) of the GLBA, the Security Guidelines, and any related Agency interpretations, such as this final Guidance, preempt state law is governed by Federal law, including the procedures set forth in section 507 of GLBA, 15 U.S.C. 6807.[9] Moreover, there is nothing in Title V of the GLBA that authorizes the Agencies to provide institutions with a safe harbor defense. Therefore, the final Guidance does not address these issues.

Organizational Changes in the ''Background'' Section

For the reasons described earlier, the Background section is adopted essentially as proposed, except that the latter part of the paragraph on ''Service Providers'' and the entire paragraph on ''Response Programs'' are incorporated into the introductory discussion of section II. The Agencies believe that the Background section is now clearer, as it focuses solely on the statutory and regulatory framework upon which the final Guidance is based. Comments and changes with respect to the paragraphs that were relocated are discussed in the next section.

[5] 12 CFR part 40 (OCC); 12 CFR part 216 (Board); 12 CFR part 332 (FDIC); and 12 CFR part 573 (OTS). In this final Guidance, citations to the Agencies' Privacy Rules refer only to the appropriate section number that is common to each of these rules.

[6] National banks, Federal branches and Federal agencies of foreign banks and any subsidiaries of these entities (except brokers, dealers, persons providing insurance, investment companies, and investment advisers) (OCC); member banks (other than national banks), branches and agencies of foreign banks (other than Federal branches, Federal agencies, and insured State branches of foreign banks), commercial lending companies owned or controlled by foreign banks, Edge and Agreement Act Corporations, bank holding companies and their nonbank subsidiaries or affiliates (except brokers, dealers, persons providing insurance, investment companies, and investment advisers) (Board); state non-member banks, insured State branches of foreign banks, and any subsidiaries of such entities (except brokers, dealers, persons providing insurance, investment companies, and investment advisers) (FDIC); and insured savings associations and any subsidiaries of such savings associations (except brokers, dealers, persons providing insurance, investment companies, and investment advisers) (OTS).

[7] *See* Security Guidelines, I.C.2.c.

[8] *See* Security Guidelines, I.C.2.b.; Privacy Rules, § __.3(h).

[9] Section 507 provides that state laws that are ''inconsistent'' with the provisions of Title V, Subtitle A of the GLBA are preempted ''only to the extent of the inconsistency.'' State laws are ''not inconsistent'' if they offer greater protection than Subtitle A, as determined by the Federal Trade Commission, after consultation with the agency or authority with jurisdiction under section 505(a) of either the person that initiated the complaint or that is the subject of the complaint. *See* 15 U.S.C. 6807.

*B. The "Response Program" Section*

The Security Guidelines enumerate a number of security measures that each financial institution must consider and adopt, if appropriate, to control risks stemming from reasonably foreseeable internal and external threats to an institution's customer information.[10] The introductory paragraph of section II of the final Guidance specifically states that a financial institution should implement those security measures designed to prevent unauthorized access to or use of customer information, such as by placing access controls on customer information systems and conducting background checks for employees [11] who are authorized to access customer information. The introductory paragraph also states that every financial institution should develop and implement security measures designed to address incidents of unauthorized access to customer information that occur despite measures to prevent security breaches.

The measures enumerated in the Security Guidelines include "response programs that specify actions to be taken when the bank suspects or detects that unauthorized individuals have gained access to customer information systems, including appropriate reports to regulatory and law enforcement agencies."[12] Prompt action by both the institution and the customer following the unauthorized access to customer information is crucial to limit identity theft. As a result, every financial institution should develop and implement a response program appropriate to the size and complexity of the institution and the nature and scope of its activities, designed to address incidents of unauthorized access to customer information.

The introductory language in section II of the final Guidance states that a response program should be a key part of an institution's information security program. It also emphasizes that a financial institution's response program should be risk-based and describes the components of a response program in a less prescriptive manner.

Service Provider Contracts

The Background section of the proposed Guidance elaborated on the specific provisions that a financial institution's contracts with its service providers should contain. The proposed Guidance stated that a financial institution's contract with its service provider should require the service provider to disclose fully to the institution information related to any breach in security resulting in an unauthorized intrusion into the institution's customer information systems maintained by the service provider. It stated that this disclosure would permit an institution to expeditiously implement its response program.

Several commenters on the proposed Guidance agreed that a financial institution's contracts with its service providers should require the service provider to disclose fully to the institution information related to any breach in security resulting in an unauthorized intrusion into the institution's customer information systems maintained by the service provider. However, many commenters suggested modifications to this section.

The discussion of this aspect of a financial institution's contracts with its service providers is in section II of the final Guidance. It has been revised as follows in response to the comments received.

Timing of Service Provider Notification

The Agencies received a number of comments regarding the timing of a service provider's notice to a financial institution. One commenter suggested requiring service providers to report incidents of unauthorized access to financial institutions within 24 hours after discovery of the incident.

In response to comments on the timing of a service provider's notice to a financial institution, the final Guidance adds that a financial institution's contract with its service provider should require the service provider to take appropriate action to address incidents of unauthorized access to the institution's customer information, including by notifying the institution as soon as possible of any such incident, to enable the institution to expeditiously implement its response program. The Agencies determined that requiring notice within 24 hours of an incident may not be practicable or appropriate in every situation, particularly where, for example, it takes a service provider time to investigate a breach in security. Therefore, the final Guidance does not specify a number of hours or days by which the service provider must give notice to the financial institution.

Existing Contracts With Service Providers

Some commenters expressed concerns that they would have to rewrite their contracts with service providers to require the disclosure described in this provision. These commenters asked the Agencies to grandfather existing contracts and to apply this provision only prospectively to new contracts. Many commenters also suggested that the final Guidance contain a transition period to permit financial institutions to modify their existing contracts.

The Agencies have decided not to grandfather existing contracts or to add a transition period to the final Guidance because, as stated in the proposed Guidance, this disclosure provision is consistent with the obligations in the Security Guidelines that relate to service provider arrangements and with existing guidance on this topic previously issued by the Agencies.[13] In order to ensure the safeguarding of customer information, financial institutions that use service providers likely have already arranged to receive notification from the service providers when customer information is accessed in an unauthorized manner. In light of the comments received, however, the Agencies recognize that there are institutions that have not formally included such a disclosure requirement in their contracts. Where this is the case, the institution should exercise its best efforts to add a disclosure requirement to its contracts and any new contracts should include such a provision.

Thus, the final Guidance adopts the discussion on service provider arrangements largely as proposed. To eliminate any ambiguity regarding the application of this section to foreign-based service providers, however, the final Guidance now makes clear that a covered financial institution [14] should be capable of addressing incidents of unauthorized access to customer information in customer information systems maintained by its domestic and foreign service providers.[15]

[10] Security Guidelines, III.B. and III.C.

[11] A footnote has been added to this section to make clear that institutions should also conduct background checks of employees to ensure that the institution does not violate 12 U.S.C. 1829, which prohibits an institution from hiring an individual convicted of certain criminal offenses or who is subject to a prohibition order under 12 U.S.C. 1818(e)(6).

[12] Security Guidelines, III.C.1.g.

[13] *See* FFIEC Information Technology Examination Handbook, Outsourcing Technology Services Booklet, Jun. 2004; Federal Reserve SR Ltr. 00–04, Outsourcing of Information and Transaction Processing, Feb. 9, 2000; OCC Bulletin 2001–47, "Third-party Relationships Risk Management Principles," Nov. 1, 2001; FDIC FIL 68–99, Risk Assessment Tools and Practices for Information System Security, July 7, 1999; OTS Thrift Bulletin 82a, Third Party Arrangements, Sept. 1, 2004.

[14] *See* footnote 6, *supra.*

[15] *See, e.g.,* FFIEC Information Technology Examination Handbook, Outsourcing Technology Services Booklet, Jun. 2004; OCC Bulletin 2002–16 (national banks); OTS Thrift Bulletin 82a, Third Party Arrangements, Sept. 1, 2004 (savings associations).

Components of a Response Program

As described earlier, commenters criticized the prescriptive nature of proposed section II that described the four components a response program should contain. The proposed Guidance instructed institutions to design programs to respond to incidents of unauthorized access to customer information by: (1) Assessing the situation; (2) notifying regulatory and law enforcement agencies; (3) containing and controlling the situation; and (4) taking corrective measures. The proposed Guidance contained detailed information about each of these four components.

The introductory discussion in this section of the final Guidance now makes clear that, as a general matter, an institution's response program should be risk-based. It applies this principle by modifying the discussion of a number of these components. The Agencies determined that the detailed instructions in these components of the proposed Guidance, especially in the ''Corrective Measures'' section, would not always be relevant or appropriate. Therefore, the final Guidance describes, through brief bulleted points, the elements of a response program, giving financial institutions greater discretion to address incidents of unauthorized access to or use of customer information that could result in substantial harm or inconvenience to a customer.

At a minimum, an institution's response program should contain procedures for: (1) Assessing the nature and scope of an incident, and identifying what customer information systems and types of customer information have been accessed or misused; (2) notifying its primary Federal regulator as soon as possible when the institution becomes aware of an incident involving unauthorized access to or use of sensitive customer information, as defined later in the final Guidance; (3) immediately notifying law enforcement in situations involving Federal criminal violations requiring immediate attention; (4) taking appropriate steps to contain and control the incident to prevent further unauthorized access to or use of customer information, such as by monitoring, freezing, or closing affected accounts, while preserving records and other evidence; and (5) notifying customers when warranted.

*Assess the Situation.* The proposed Guidance stated that an institution should assess the nature and scope of the incident and identify what customer information systems and types of customer information have been accessed or misused.

Some commenters stated that the Agencies should retain this provision in the final Guidance. One commenter suggested that an institution should focus its entire response program primarily on addressing unauthorized access to sensitive customer information.

The Agencies have concluded that a financial institution's response program should begin with a risk assessment that allows an institution to establish the nature of any information improperly accessed. This will allow the institution to determine whether and how to respond to an incident. Accordingly, the Agencies have not changed this provision.

*Notify Regulatory and Law Enforcement Agencies.* The proposed Guidance provided that an institution should promptly notify its primary Federal regulator when it becomes aware of an incident involving unauthorized access to or use of customer information that could result in substantial harm or inconvenience to customers. In addition, the proposed Guidance stated that an institution should file a Suspicious Activity Report (SAR), if required, in accordance with the applicable SAR regulations [16] and various Agency issuances.[17] The proposed Guidance stated that, consistent with the Agencies' SAR regulations, in situations involving Federal criminal violations requiring immediate attention, the institution immediately should notify, by telephone, the appropriate law enforcement authorities and its primary regulator, in addition to filing a timely SAR. For the sake of clarity, the final Guidance discusses notice to regulators and notice to law enforcement in two separate bulleted items.

Standard for Notice to Regulators

The provision regarding notice to regulators in the proposed Guidance prompted numerous comments. Many commenters suggested that the Agencies adopt a narrow standard for notifying regulators. These commenters were concerned that notice to regulators, provided under the circumstances described in the proposed Guidance, would be unduly burdensome for institutions, service providers, and regulators, alike.

Some of these commenters suggested that the Agencies adopt the same standard for notifying regulators and customers. These commenters recommended that notification occur when an institution becomes aware of an incident involving unauthorized access to or use of ''sensitive customer information,'' a defined term in the proposed Guidance that specified a subset of customer information deemed by the Agencies as most likely to be misused.

Other commenters recommended that the Agencies narrow this provision so that a financial institution would inform a regulator only in connection with an incident that poses a significant risk of substantial harm to a significant number of its customers, or only in a situation where substantial harm to customers has occurred or is likely to occur, instead of when it could occur.

Other commenters who advocated the adoption of a narrower standard asked the Agencies to take the position that filing a SAR constitutes sufficient notice and that notification of other regulatory and law enforcement agencies is at the sole discretion of the institution. One commenter stated that it is difficult to imagine any scenario that would trigger the response program without requiring a SAR filing. Some commenters asserted that if the Agencies believe a lower threshold is advisable for security breaches, the Agencies should amend the SAR regulations.

By contrast, some commenters recommended that the standard for notification of regulators remain broad. One commenter advocated that any event that triggers an internal investigation by the institution should require notice to the appropriate regulator. Another commenter similarly suggested that notification of all security events to Federal regulators is critical, not only those involving unauthorized access to or use of customer information

[16] 12 CFR 21.11 (national banks, Federal branches and agencies); 12 CFR 208.62 (State member banks); 12 CFR 211.5(k) (Edge and agreement corporations); 12 CFR 211.24(f) (uninsured State branches and agencies of foreign banks); 12 CFR 225.4(f) (bank holding companies and their nonbank subsidiaries); 12 CFR part 353 (State non-member banks); and 12 CFR 563.180 (savings associations).

[17] For example, national banks must file SARs in connection with computer intrusions and other computer crimes. *See* OCC Bulletin 2000–14, ''Infrastructure Threats—Intrusion Risks'' (May 15, 2000); OCC AL 97–9, ''Reporting Computer Related Crimes'' (November 19, 1997) (general guidance still applicable though instructions for new SAR form published in 65 FR 1229, 1230 (January 7, 2000)). *See also* OCC AL 2001–4, Identity Theft and Pretext Calling, April 30, 2001; Federal Reserve SR 01–11, Identity Theft and Pretext Calling, Apr. 26, 2001; SR 97–28, Guidance Concerning Reporting of Computer Related Crimes by Financial Institutions, Nov. 6, 1997; FDIC FIL 48–2000, Suspicious Activity Reports, July 14, 2000; FIL 47–97, Preparation of Suspicious Activity Reports, May 6, 1997; OTS CEO Memorandum 139, Identity Theft and Pretext Calling, May 4, 2001; *http://www.ots.treas.gov/BSA* (for the latest SAR form and filing instructions required by OTS as of July 1, 2003).

that could result in substantial harm or inconvenience to its customers.

The Agencies have concluded that the standard for notification to regulators should provide an early warning to allow an institution's regulator to assess the effectiveness of an institution's response plan, and, where appropriate, to direct that notice be given to customers if the institution has not already done so. Thus, the standard in the final Guidance states that an institution should notify its primary Federal regulator as soon as possible when the institution becomes aware of an incident involving unauthorized access to or use of ''sensitive customer information.''

''Sensitive customer information'' is defined in section III of the final Guidance and means a customer's name, address, or telephone number, in conjunction with the customer's social security number, driver's license number, account number, credit or debit card number, or a personal identification number or password that would permit access to the customer's account. ''Sensitive customer information'' also includes any combination of components of customer information that would allow someone to log onto or access the customer's account, such as user name and password or password and account number.

This standard is narrower than that in the proposed Guidance because a financial institution will need to notify its regulator only if it becomes aware of an incident involving ''sensitive customer information.'' Therefore, under the final Guidance, there will be fewer occasions when a financial institution should need to notify its regulators. However, under this standard, a financial institution will need to notify its regulator at the time that the institution initiates its investigation to determine the likelihood that the information has been or will be misused, so that the regulator will be able to take appropriate action, if necessary.

Method of Providing Notice to Regulators

Commenters on the proposed Guidance also questioned how a financial institution should provide notice to its regulator. One commenter suggested that the Agencies should standardize the notice that financial institutions provide to their regulators. The commenter suggested that the Agencies use these notices to track institutions' compliance with the Security Guidelines, gather comprehensive details regarding each incident, and track other statistical data regarding security. The statistical data could include the number of security incidents reported annually and the number of times the incidents warranted customer notice.

The Agencies do not wish to create another SAR-like process that requires the completion of detailed forms. Instead, the Agencies contemplate that a financial institution will notify regulators as quickly as possible, by telephone, or in some other expeditious manner when the institution becomes aware of an incident involving unauthorized access to or use of sensitive customer information. The Agencies believe that the extent to which they will gather statistics on security incidents and customer notice is beyond the scope of the final Guidance. Whether or not an Agency will track the number of incidents reported is left to the discretion of individual Agencies.

Notice to Regulators by Service Providers

Commenters on the proposed Guidance questioned whether a financial institution or its service provider should give notice to a regulator when a security incident involves an unauthorized intrusion into the institution's customer information systems maintained by the service provider. One commenter noted that if a security event occurs at a large service provider, regulators could receive thousands of notices from institutions relating to the same event. The commenter suggested that if a service provider is examined by one of the Agencies the most efficient means of providing regulatory notice of such a security event would be to allow the servicer to notify its primary Agency contact. The primary Agency contact then could disseminate the information to the other regulatory agencies as appropriate.

The Agencies believe that it is the responsibility of the financial institution and not the service provider to notify the institution's regulator. Therefore, the final Guidance states that a financial institution should notify its primary Federal regulator as soon as possible when the institution becomes aware of an incident involving unauthorized access to or use of sensitive customer information. Nonetheless, a security incident at a service provider could have an impact on multiple financial institutions that are supervised by different Federal regulators. Therefore, in the interest of efficiency and burden reduction, the last paragraph in section II of the final Guidance makes clear that an institution may authorize or contract with its service provider to notify the institution's regulator on the institution's behalf when a security incident involves an unauthorized intrusion into the institution's customer information systems maintained by the service provider.

Notice to Law Enforcement

Some commenters took issue with the provision in the proposed Guidance regarding notification of law enforcement by telephone. One commenter asked the Agencies to clarify how notification of law enforcement by telephone would work since in many cases it is unclear what telephone number should be used. This commenter maintained that size and sophistication of law enforcement authorities may differ from state to state and this requirement may create confusion and unwarranted action by the law enforcement authority.

The final Guidance adopts this provision as proposed. The Agencies note that the provision stating that an institution should notify law enforcement by telephone in situations involving Federal criminal violations requiring immediate attention is consistent with the Agencies' existing SAR regulations.[18]

*Contain and Control the Situation.* The proposed Guidance stated that the financial institution should take measures to contain and control a security incident to prevent further unauthorized access to or use of customer information while preserving records and other evidence.[19] It also stated that, depending upon the particular facts and circumstances of the incident, measures in connection with computer intrusions could include: (1) Shutting down applications or third party connections; (2) reconfiguring firewalls in cases of unauthorized electronic intrusion; (3) ensuring that all known vulnerabilities in the financial institution's computer systems have been addressed; (4) changing computer access codes; (5) modifying physical access controls; and (6) placing additional controls on service provider arrangements.

Few comments were received on this section. One commenter suggested that the Agencies adopt this section unchanged in the final Guidance. Another commenter had questions about the meaning of the phrase

[18] *See* footnote 16, *supra.*

[19] *See* FFIEC Information Technology Examination Handbook, Information Security Booklet, Dec. 2002, pp. 68–74 available at: *http://www.ffiec.gov/ffiecinfobase/html_pages/infosec_book_frame.htm.*

''known vulnerabilities.'' Commenters did, however, note the overlap between proposed section II.C., and the corrective measures in proposed section II.D., described as ''flagging accounts'' and ''securing accounts.''

The Agencies agree that some sections in the proposed Guidance overlapped. Therefore, the Agencies modified this section by incorporating concepts from the proposed Corrective Measures component, and removing the more specific examples in this section, including the terms that confused commenters. This section in the final Guidance gives an institution greater discretion to determine the measures it will take to contain and control a security incident. It states that institutions should take appropriate steps to contain and control the incident to prevent further unauthorized access to or use of customer information, such as by monitoring, freezing, or closing affected accounts, while preserving records and other evidence.

Preserving Evidence

One commenter stated that the final Guidance should require financial institutions, as part of the response process, to have an effective computer forensics capability in order to investigate and mitigate computer security incidents as discussed in principle fourteen of the Basel Committee's ''Risk Management for Electronic Banking'' [20] and the International Organization for Standardization's ISO 17799.[21]

The Agencies note that the final Guidance addresses not only computer security incidents, but also all other incidents of unauthorized access to customer information. Thus, it is not appropriate to include more detail about steps an institution should take to investigate and mitigate computer security incidents. However, the Agencies believe that institutions should be mindful of industry standards when investigating an incident. Therefore, the final Guidance contains a reference to forensics by generally noting that an institution should take appropriate steps to contain and control an incident, while preserving records and other evidence.

*Corrective Measures.* The proposed Guidance stated that once a financial institution understands the scope of the incident and has taken steps to contain and control the situation, it should take measures to address and mitigate the harm to individual customers. It then described three corrective measures that a financial institution should include as a part of its response program in order to effectively address and mitigate harm to individual customers: (1) Flagging accounts; (2) securing accounts; and (3) notifying customers. The Agencies removed the first two corrective measures for the reasons that follow.

*Flagging and Securing Accounts.* The first corrective measure in the proposed Guidance directed financial institutions to ''flag accounts.'' It stated that an institution should immediately begin identifying and monitoring the accounts of those customers whose information may have been accessed or misused. It also stated that an institution should provide staff with instructions regarding the recording and reporting of any unusual activity, and if indicated given the facts of a particular incident, implement controls to prevent the unauthorized withdrawal or transfer of funds from customer accounts.

The second corrective measure directed institutions to ''secure accounts.'' The proposed Guidance stated that when a checking, savings, or other deposit account number, debit or credit card account number, personal identification number (PIN), password, or other unique identifier has been accessed or misused, the financial institution should secure the account and all other accounts and services that can be accessed using the same account number or name and password combination. The proposed Guidance stated that accounts should be secured until such time as the financial institution and the customer agree on a course of action.

Commenters were critical of these proposed measures. Several commenters asserted that the final Guidance should not prescribe responses to security incidents with this level of detail. Other commenters recommended that if the Agencies chose to retain references to ''flagging'' or ''securing'' accounts, they should include the words ''where appropriate'' in order to give institutions the flexibility to choose the most effective solutions to problems.

Commenters also stated that the decision to flag accounts, the nature of that flag, and the duration of the flag, should be left to an individual financial institution's risk-based procedures developed under the Security Guidelines. These commenters asked the Agencies to recognize that regular, ongoing fraud prevention and detection methods employed by an institution may be sufficient.

Commenters representing small institutions stated that they do not have the technology or other resources to monitor individual accounts. They stated that the financial impact of having to monitor accounts for unusual activity would be enormous, as each institution would have to purchase expensive technology, hire more personnel, or both. These commenters asked the Agencies to provide institutions with the flexibility to close an account if the institution detects unusual activity.

With respect to ''securing accounts,'' several commenters stated that if ''secure'' means close or freeze, either action would be extreme and would have significant adverse consequences for customers. Other commenters stated that the requirement that the institution and the customer ''agree on a course of action'' is unrealistic, unworkable and should be eliminated. Some commenters explained that if a customer is traveling and the financial institution cannot contact the customer to obtain the customer's consent, freezing or closing a customer's account could strand the customer with no means of taking care of expenses. They stated that, in the typical case, the institution would monitor such an account for suspicious transactions.

As described earlier, the Agencies are adopting an approach in the final Guidance that is more flexible and risk-based than that in the proposed Guidance. The final Guidance incorporates the general concepts described in the first two corrective measures into the brief bullets describing components of a response program enumerated in section II.C. Therefore, the first and second corrective measures no longer appear in the final Guidance.

*Customer Notice and Assistance.* The third corrective measure in the proposed Guidance was titled ''Customer Notice and Assistance.'' This proposed measure stated that a financial institution should notify and offer assistance to customers whose information was the subject of an incident of unauthorized access or use under the circumstances described in section III of the proposed Guidance. The proposed Guidance also described which customers should be notified. In addition, this corrective measure contained provisions discussing delivery and contents of the customer notice.

The final Guidance now states that an institution's response program should contain procedures for notifying customers when warranted. For clarity's sake, the discussion of which customers should be notified, and the delivery and contents of customer notice, is now in new section III, titled ''Customer

[20] *http://www.bis.org/publ/bcbs35.htm.*

[21] *http://www.iso.org/iso/en/prods-services/popstds/informationsecurity.html.*

Notice.'' Comments and changes with respect to the paragraphs that were relocated are discussed under the section titled ''Customer Notice'' that follows.

Responsibility for Notice to Customers

Some commenters were confused by the discussion in the proposed Guidance stating that a financial institution's contract with its service provider should require the service provider to disclose fully to the institution information related to any breach in security resulting in an unauthorized intrusion into the institution's customer information systems maintained by the service provider. Commenters stated that this provision appears to create an obligation for both financial institutions and their service providers to provide notice of security incidents to the institution's customers. These commenters recommended that the service provider notify its financial institution customer so that the financial institution could provide appropriate notice to its customers. Thus, customers would avoid receiving multiple notices relating to a single security incident.

Other commenters asserted that a financial institution should not have to notify its customers if an incident has occurred because of the negligence of its service provider. These commenters recommended that in this situation, the service provider should be responsible for providing notice to the financial institution's customers.

As discussed above in connection with notice to regulators, the Agencies believe that it is the responsibility of the institution, and not of the service provider, to notify the institution's customers in connection with an unauthorized intrusion into an institution's customer information systems maintained by the service provider. The responsibility to notify customers remains with the institution whether the incident is inadvertent or due to the service provider's negligence. The Agencies note that the costs of providing notice to the institution's customers as a result of negligence on the part of the service provider may be addressed in the financial institution's contract with its service provider.

The last paragraph in section II of the final Guidance, therefore, states that it is the responsibility of the financial institution to notify the institution's customers. It also states that the institution may authorize or contract with its service provider to notify customers on the institution's behalf, when a security incident involves an unauthorized intrusion into the institution's customer information systems maintained by the service provider.

*C. The ''Customer Notice'' Section*

Section III of the proposed Guidance described the standard for providing notice to customers and defined the term ''sensitive customer information'' used in that standard. This section also gave examples of circumstances when a financial institution should give notice and when the Agencies do not expect a financial institution to give notice. It also discussed contents of the notice and proper delivery.

Section III of the final Guidance similarly describes the standard for providing notice to customers and defines both the terms ''sensitive customer information'' and ''affected customers.'' It also discusses the contents of the notice and proper delivery.

Standard for Providing Notice

A key feature of the proposed Guidance was the description of when a financial institution should provide customer notice. The proposed Guidance stated that an institution should notify affected customers whenever it becomes aware of unauthorized access to ''sensitive customer information'' unless the institution, after an appropriate investigation, reasonably concludes that misuse of the information is unlikely to occur and takes appropriate steps to safeguard the interests of affected customers, including by monitoring affected customers' accounts for unusual or suspicious activity.

The Agencies believed that this proposed standard would strike a balance between notification to customers every time the mere possibility of misuse of customer information arises from unauthorized access and a situation where the financial institution knows with certainty that information is being misused. However, the Agencies specifically requested comment on whether this is the appropriate standard and invited commenters to offer alternative thresholds for customer notification.

Some commenters stated that the proposed standard was reasonable and sufficiently flexible. However, many commenters recommended that the Agencies provide financial institutions with greater discretion to determine when a financial institution should notify its customers. Some of these commenters asserted that a financial institution should not have to give notice unless the institution believes it ''to be reasonably likely,'' or if circumstances indicated ''a significant risk'' that the information will be misused.

Commenters maintained that because the proposed standard states that a financial institution should give notice when fraud or identity theft is merely possible, notification under these circumstances would needlessly alarm customers where little likelihood of harm exists. Commenters claimed that, eventually, frequent notices in non-threatening situations would be perceived by customers as routine and commonplace, and therefore reduce their effectiveness.

The Agencies believe that articulating as part of the guidance a standard that sets forth when notice to customers is warranted is both helpful and appropriate. However, the Agencies agree with commenters and are concerned that the proposed threshold inappropriately required institutions to prove a negative proposition, namely, that misuse of the information accessed is unlikely to occur. In addition, the Agencies do not want customers of financial institutions to receive notices that would not be useful to them. Therefore, the Agencies have revised the standard for customer notification.

The final Guidance provides that when an institution becomes aware of an incident of unauthorized access to sensitive customer information, the institution should conduct a reasonable investigation to determine promptly the likelihood that the information has been or will be misused. If the institution determines that misuse of the information has occurred or is reasonably possible, it should notify affected customers as soon as possible.

An investigation is an integral part of the standard in the final Guidance. A financial institution should not forego conducting an investigation to avoid reaching a conclusion regarding the likelihood that customer information has been or will be misused and cannot unreasonably limit the scope of the investigation. However, the Agencies acknowledge that a full-scale investigation may not be necessary in all cases, such as where the facts readily indicate that information will or will not be misused.

Monitoring for Suspicious Activity

The proposed Guidance stated that an institution need not notify customers if it reasonably concludes that misuse of the information is unlikely to occur and takes appropriate steps to safeguard the interests of affected customers, including by monitoring affected customers' accounts for unusual or

suspicious activity. A number of comments addressed the standard in the proposed Guidance on monitoring affected customers' accounts for unusual or suspicious activity.

Some commenters stated that the final Guidance should grant institutions the discretion to monitor the affected customer accounts for a period of time and to the extent warranted by the particular circumstances. Some commenters suggested that monitoring occur during the investigation. One commenter noted that an institution's investigation may reveal that monitoring is unnecessary. One commenter noted that monitoring the customer's accounts at the institution may not protect the customer, because unauthorized access to customer information may result in identity theft beyond the accounts held at the specific financial institution.

The Agencies agree that under certain circumstances, monitoring may be unnecessary, for example when, on the basis of a reasonable investigation, an institution determines that information was not misused. The Agencies also agree that the monitoring requirement may not protect the customer. Indeed, an identity thief with unauthorized access to certain sensitive customer information likely will open accounts at other financial institutions in the customer's name. Accordingly, the Agencies conclude that monitoring under the circumstances described in the standard for notice would be burdensome for financial institutions without a commensurate benefit to customers. For these reasons, the Agencies have removed the reference to monitoring in the final Guidance.

Timing of Notice

The proposed Guidance did not include specific language on the timing of notice to customers and the Agencies received many comments on this issue. Some commenters requested clarification of the time frame for customer notice. One commenter recommended that the Agencies adopt the approach in the proposed Guidance because it did not set forth any circumstances that may delay notification of the affected customers. Yet another commenter maintained that, in light of a customer's need to act expeditiously against identity theft, an outside limit of 48 hours after the financial institution learns of the breach is a reasonable and timely requirement for notice to customers. Many commenters, however, recommended that the Agencies make clear that an institution may take the time it reasonably needs to conduct an investigation to assess the risk resulting from a security incident.

The Agencies have responded to these various comments on the timing of notice by providing that a financial institution notify an affected customer ''as soon as possible'' after concluding that misuse of the customer's information has occurred or is reasonably possible. As the scope and timing of a financial institution's investigation is dictated by the facts and circumstances of a particular case, the Agencies have not designated a specific number of hours or days by which financial institutions should provide notice to customers. The Agencies believe that doing so may inhibit an institution's ability to investigate adequately a particular incident or may result in notice that is not timely.

Delay for Law Enforcement Investigation

The proposed Guidance did not address delay of notice to customers while a law enforcement investigation is conducted. Many commenters recommended permitting an institution to delay notification to customers to avoid compromising a law enforcement investigation. These commenters noted that the California Database Protection Act of 2003 (CDPA) requires notification of California residents whose unencrypted personal information was, or is reasonably believed to have been, acquired by an unauthorized person.[22] However, the CDPA permits a delay in notification if a law enforcement agency determines that the notification will impede a criminal investigation.[23] Another commenter suggested that an institution should not have to obtain a formal determination from a law enforcement agency before it is able to delay notice.

The Agencies agree that it is appropriate to delay customer notice if such notice will jeopardize a law enforcement investigation. However, to ensure that such a delay is necessary and justifiable, the final Guidance states that customer notice may be delayed if an appropriate law enforcement agency determines that notification will interfere with a criminal investigation and provides the institution with a written request for the delay.[24]

The Agencies are concerned that a delay of notification for a law enforcement investigation could interfere with the ability of customers to protect themselves from identity theft and other misuse of their sensitive information. Thus, the final Guidance also provides that a financial institution should notify its customers as soon as notification will no longer interfere with the investigation and should maintain contact with the law enforcement agency that has requested a delay, in order to learn, in a timely manner, when customer notice will no longer interfere with the investigation.

*Sensitive Customer Information*

Scope of Standard

The Agencies received many comments on the limitation of notice in the proposed Guidance to incidents involving unauthorized access to sensitive customer information. The Agencies invited comment on whether to modify the proposed standard for notice to apply to other circumstances that compel an institution to conclude that unauthorized access to information, other than sensitive customer information, likely will result in substantial harm or inconvenience to the affected customers.

Most commenters recommended that the standard remain as proposed rather than covering other types of information. One commenter suggested that the Agencies continue to allow a financial institution the discretion to notify affected customers in any other extraordinary circumstances that compel it to conclude that unauthorized access to information other than sensitive customer information likely will result in substantial harm or inconvenience to those affected. However, the commenter did not provide any examples of such extraordinary circumstances.

The Agencies continue to believe that the rationale for limiting the standard to sensitive customer information expressed in the proposed Guidance is correct. The proposed Guidance explained that, under the Security Guidelines, an institution must protect against unauthorized access to or use of customer information that could result in substantial harm or inconvenience to a customer. Substantial harm or inconvenience is most likely to result from improper access to sensitive customer information because this type of information is most likely to be misused, as in the commission of identity theft.

The Agencies have not identified any other circumstances that should prompt customer notice and continue to believe that it is not likely that a customer will suffer substantial harm or inconvenience from unauthorized

[22] *See* CAL. CIV. CODE § 1798.82 (West 2005).

[23] *See* CAL. CIV. CODE § 1798.82(c) (West 2005).

[24] This includes circumstances when an institution confirms that an oral request for delay from law enforcement will be followed by a written request.

access to other types of information. Therefore, the standard in the final Guidance continues to be limited to unauthorized access to sensitive customer information. Of course, a financial institution still may send notices to customers in any additional circumstances that it determines are appropriate.

Definition of Sensitive Customer Information

The Agencies received many comments on the proposed definition of ''sensitive customer information'' in the proposed Guidance. The first part of the proposed definition stated that ''sensitive customer information'' is a customer's social security number, personal identification number (PIN), password or account number, in conjunction with a personal identifier such as the customer's name, address, or telephone number. In addition, the second part of the proposed definition stated that ''sensitive customer information'' includes any combination of components of customer information that allow someone to log onto or access another person's account, such as user name and password.

Some commenters agreed with this definition of ''sensitive customer information.'' They said that it was sound, workable, and sufficiently detailed. However, many commenters proposed additions, exclusions, or alternative definitions.

Additional Elements

Some commenters suggested that the Agencies add various data elements to the definition of sensitive customer information, including a driver's license number or number of other government-issued identification, mother's maiden name, and date of birth. One commenter suggested inclusion of other information that institutions maintain in their customer information systems such as a customer's account balance, account activity, purchase history, and investment information. The commenter noted that misuse of this information in combination with a personal identifier can just as easily result in substantial harm or inconvenience to a customer.

The Agencies have added to the first part of the definition several more specific components, such as driver's license number and debit and credit card numbers, because this information is commonly sought by identity thieves. However, the Agencies determined that the second part of the definition would cover the remaining suggestions. For example, where date of birth or mother's maiden name are used as passwords, under the final Guidance they will be considered components of customer information that allow someone to log onto or access another person's account. Therefore, these specific elements have not been added to the definition.

Exclusions

Commenters also asserted that the proposed definition of sensitive customer information was too broad and proposed various exclusions. For example, some commenters asked the Agencies to exclude publicly available information, and also suggested that the final Guidance apply only to account numbers for transaction accounts or other accounts from which withdrawals or transfers can be initiated. These commenters explained that access to a mortgage account number (which may also be a public record) does not permit withdrawal of additional funds or otherwise damage the customer. Other commenters requested that the Agencies exclude encrypted information. Some of these commenters noted that only unencrypted information is covered by the CDPA.[25]

The final Guidance does not adopt any of the proposed exclusions. The Agencies believe it would be inappropriate to exclude publicly available information from the definition of sensitive customer information, where publicly available information is otherwise covered by the definition of ''customer information.''[26] So for instance, while a personal identifier, *i.e.*, name, address, or phone number, may be publicly available, it is sensitive customer information when linked with particular nonpublic information such as a credit card account number. However, where the definition of ''customer information'' does not cover publicly available information, sensitive customer information also would not cover publicly available information. For instance, where an individual's name or address is linked with a mortgage loan account number that is in the public record and, therefore, would not be considered ''customer information,''[27] it also would not be considered ''sensitive customer information'' for purposes of the final Guidance.

In addition, access to a customer's personal information and account number, regardless of whether it is an account from which withdrawals or transfers can be initiated, may permit an identity thief to access other accounts from which withdrawals can be made. Thus, the Agencies have determined that the definition of account number should not be limited as suggested by commenters. The Agencies also believe that a blanket exclusion for all encrypted information is not appropriate, because there are many levels of encryption, some of which do not effectively protect customer information.

Alternative Definitions

Most alternative definitions suggested by commenters resembled the definition of ''personal information'' under the CDPA.[28] Under the CDPA, ''personal information'' includes a resident of California's name together with an account number, or credit or debit card number *only* if the information accessed also includes any required security code, access code, or password that would permit access to an individual's financial account. Therefore, some commenters asked that the final Guidance clarify that a name and an account number, together, is not sensitive customer information unless these elements are combined with other information that permits access to a customer's financial account.

The Agencies concluded that it would be helpful if financial institutions could more easily compare and contrast the definition of ''personal information'' under the CDPA with the definition of ''sensitive information'' under the Final Guidance. Therefore, the elements in the definition of sensitive information in the final Guidance are re-ordered and the Agencies added the elements discussed earlier.

The final Guidance states that sensitive customer information means a customer's name, address, or telephone number, in conjunction with the customer's social security number, driver's license number, account number, credit or debit card number, or a personal identification number or password that would permit access to the customer's account. The final Guidance also states that sensitive customer information includes any combination of components of customer information that would allow someone to log onto or access the customer's account, such as user name and

[25] *See* CAL. CIV. CODE § 1798.82(a) (West 2005).

[26] *See* Security Guidelines, I.C.2.c.

[27] *See* § __.3(p)(3)(i).

[28] Under California law requiring notice, ''personal information'' means an individual's first name or first initial and last name in combination with any one or more of the following data elements, when either the name or the data elements are not encrypted: (1) Social security number; (2) driver's license number or California Identification Card number; (3) account number, credit or debit card number, in combination with any required security code access code, or password that would permit access to an individual's financial account. *See* CAL. CIV. CODE § 1798.82(e) (West 2005).

password or a password and account number.

The Agencies decline to adopt the CDPA standard for several reasons. First, for example, under the CDPA, personal information includes a person's name in combination with other data elements. By contrast, the final Guidance treats address and telephone number in the same manner as a customer's name, because reverse directories may permit an address or telephone number to be traced back to an individual customer.

In addition, under the CDPA, ''personal information'' includes name together with an account number, or credit or debit card number only if the information accessed also includes any required security code, access code, or password that would permit access to an individual's financial account. The Agencies note that a name and account number, alone, is sufficient to create fraudulent checks, or to direct the unauthorized debit of a customer's account even without an access code.[29] Further, a name and credit card number may permit unauthorized access to a customer's account. Therefore, the final Guidance continues to define a customer's name and account number, or credit or debit card number as sensitive customer information.

*Affected Customers.* The Agencies received many comments on the discussion of notice to ''affected customers'' in the proposed Guidance. Section II.D.3. of the proposed Guidance provided that if the institution could determine from its logs or other data precisely which customers' information was accessed or misused, it could restrict its notification to those individuals. However, if the institution could not identify precisely which customers were affected, it should notify each customer in any group likely to have been affected, such as each customer whose information was stored in the group of files in question.

Commenters were concerned that this provision in the proposed Guidance was overly broad. These commenters stated that providing notice to all customers in groups likely to be affected would result in many notices that are not helpful. The commenters suggested that the final Guidance narrow the standard for notifying customers to only those customers whose information has been or is likely to be misused.

The discussion of ''affected customers'' has been relocated and is separately set forth following the definition of ''sensitive customer information,'' in the final Guidance. The discussion of ''affected customers'' in the final Guidance states that if a financial institution, based upon its investigation, can determine from its logs or other data precisely which customers' information has been improperly accessed,[30] it may notify only those customers with respect to whom the institution determines that misuse of their information has occurred or is reasonably possible. However, the final Guidance further notes that there may be situations where the institution determines that a group of files has been accessed improperly, but is unable to identify which specific customers' information has been accessed. If the circumstances of the unauthorized access lead the institution to determine that misuse of the information contained in the group of files is reasonably possible, it should notify all customers in the group. In this way, the Agencies have reduced the number of notices that should be sent.

*Examples.* The proposed Guidance described several examples of when a financial institution should give notice and when the Agencies do not expect a financial institution to give notice.

The Agencies received a number of comments on the examples. Some commenters thought the examples were helpful and suggested that the Agencies add more. Other commenters criticized the examples as too broad. Many commenters suggested numerous ways to modify and clarify the examples.

Since the examples in the proposed Guidance led to interpretive questions, rather than interpretive clarity, the Agencies concluded that it is not particularly helpful to offer examples of when notice is and is not expected. In addition, the Agencies believe that the standard for notice itself has been clarified and examples are no longer necessary. Therefore, there are no examples in the final Guidance.

*Content of Customer Notice.* The Agencies received many comments on the discussion of the content of customer notice located in section II.D.3.b. of the proposed Guidance. The proposed Guidance stated that a notice should describe the incident in general terms and the customer's information that was the subject of unauthorized access or use. It stated that the notice should also include a number that customers can call for further information and assistance, remind customers of the need to remain vigilant over the next 12 to 24 months, and recommend that customers promptly report incidents of suspected identity theft. The proposed Guidance described several ''key elements'' that a notice should contain. It also provided a number of ''optional elements'' namely, examples of additional assistance that institutions have offered.

Some commenters agreed that the proposed Guidance sufficiently addressed most of the key elements necessary for an effective notice. However, many commenters requested greater discretion to determine the content of the notices that financial institutions provide to customers. Commenters suggested that the Agencies make clear that the various items suggested for inclusion in any customer notice are suggestions, and that not every item is mandatory in every notice.

Some commenters took issue with the enumerated items in the proposed Guidance identified as key elements that a notice should contain. For example, many commenters asserted that customers should not necessarily be encouraged to place fraud alerts with credit bureaus in every circumstance. Some of these commenters noted that not all situations will warrant having a fraud alert posted to the customer's credit file, especially if the financial institution took appropriate action to render the information accessed worthless. According to these commenters, the consequences of a fraud alert, such as increased obstacles to obtaining credit, may outweigh any benefit. Some commenters also noted that a proliferation of fraud alerts not related to actual fraud would dilute the effectiveness of the alerts.

Other commenters criticized the optional elements in the proposed Guidance. For instance, some commenters stated that a notice should not inform the customer about subscription services that provide notification to the customer when there is a request for the customer's credit report, or offer to subscribe the customer to this service, free of charge, for a period of time. These commenters asserted that customer notices should not be converted into a marketing opportunity for subscription services provided by consumer credit bureaus. They stated that offering the service could mislead the customer into believing that these expensive services

[29] *See, e.g.*, Griff Witte, *Bogus Charges, Unknowingly Paid: FTC Accuses 2 of Raiding 90,000 Bank Accounts in Card Fraud*, Washington Post, May 29, 2004, at E1 (list of names with associated checking account numbers used by bogus company to debit bank accounts without customer authorization).

[30] The Agencies note that system logs may permit an institution to determine precisely which customers' data has been improperly accessed. *See, e.g.*, FFIEC Information Technology Handbook, Information Security Booklet, page 64 available at *http://www.ffiec.gov/ffiecinfobase/html_pages/infosec_book_frame.htm.*

are essential. If the service is offered free of charge, an institution's choice of service could be interpreted as an endorsement for a specific company and its product.

As a result of the Fair and Accurate Credit Transactions Act of 2003, Pub. L. 108–159, 117 Stat. 1985–86 (the FACT Act), many of the descriptions of ''key elements'' and ''optional elements'' in the proposed Guidance, and comments on these elements, have been superceded. For example, the frequency and circumstances under which a customer may obtain a credit report free-of-charge have changed.

The final Guidance continues to specify that a notice should describe the incident in general terms and the customer's information that was the subject of unauthorized access or use. It also continues to state that the notice should include a number that customers can call for further information and assistance, remind customers of the need to remain vigilant over the next 12 to 24 months, and recommend that customers promptly report incidents of suspected identity theft. In addition, the final Guidance also states that the notice should generally describe what the institution has done to protect the customers' information from further unauthorized access.

However, the final Guidance no longer distinguishes between certain other ''key'' items that the notice should contain and those that are ''optional.'' The Agencies added greater flexibility to this section to accommodate any new protections afforded to consumers that flow from the FACT Act. Instead of distinguishing between items that the notice should contain and those that are optional, an institution may now select those items that are appropriate under the circumstances, and that are compatible with the FACT Act. Of course, institutions may incorporate additional information that is not mentioned in the final Guidance, where appropriate.

Coordination With Credit Reporting Agencies

A trade association representing credit reporting agencies commented that its members are extremely concerned about their ability to comply with all of the duties (triggered under the FACT Act) that result from notices financial institutions send to their customers. This commenter strongly recommended that until a financial institution has contacted each nationwide consumer reporting agency to coordinate the timing, content, and staging of notices as well as the placement of fraud alerts, as necessary, a financial institution should refrain from issuing notices suggesting that customers contact nationwide consumer reporting agencies.

The commenter also stated that a financial institution that includes such suggestions in a notice to its customers should work with the credit reporting agencies to purchase the services the financial institution believes are necessary to protect its customers. The commenter stated that the costs of serving the millions of consumers it projects would receive notices under the proposed Guidance cannot be borne by the nationwide consumer reporting agencies.

The commenter also noted that the State of California has provided clear guidance in connection with its law requiring notice and also suggested that coordination with consumer reporting agencies is vital to ensure that a consumer can in fact request a file disclosure in a timely manner. This commenter stated that similar guidance at the federal level is essential.

The Agencies believe that the final Guidance addresses this commenter's concerns in several ways. First, for the reasons described earlier, the standard for customer notice in the final Guidance likely will result in financial institutions sending fewer notices than under the proposed Guidance. Second, the final Guidance no longer advises financial institutions to send notices suggesting that consumers contact the nationwide credit reporting agencies in every case. Institutions can use their discretion to determine whether such information should be included in a notice.

It is clear, however, that customer notice may prompt more consumer contacts with credit reporting agencies, as predicted by the commenter. Therefore, the final Guidance encourages a financial institution that includes in its notice contact information for nationwide consumer reporting agencies to notify the consumer reporting agencies in advance, prior to sending large numbers of such notices. In this way, the reporting agencies will be on notice that they may have to accommodate additional requests for the placement of fraud alerts, where necessary.

Model Notice

Some commenters stated that if mandatory elements are included in the final Guidance, the Agencies should develop a model notice that incorporates all the mandated elements yet allows financial institutions to incorporate additional information where appropriate.

Given the flexibility that financial institutions now have to craft a notice tailored to the circumstances of a particular incident, the Agencies believe that any single model notice will be of little use. Therefore, the final Guidance does not contain a model notice.

Other Changes Regarding the Content of a Notice

The general discussion of the content of a notice in the final Guidance states that financial institutions should give the customer notice in a ''clear and conspicuous manner.'' In addition, the final Guidance adopts a commenter's suggestion that financial institutions should generally describe what the institution has done to protect a customer's information from further unauthorized access so that a customer can make decisions regarding the institution's customer service. This addition allows a customer to take measures to protect his or her accounts that are not redundant or in conflict with the institution's actions.

The final Guidance also states that notice should include a telephone number that customers can call for further information and assistance. The Agencies added a new footnote to this text, which explains that the institution should ensure that it has reasonable policies and procedures in place, including trained personnel, to respond appropriately to customer inquiries and requests for assistance.

*Delivery of Customer Notice.* The Agencies received numerous suggestions regarding the delivery of customer notice located in section II.D.3.a. of the proposed Guidance. The proposed Guidance stated that customer notice should be timely, clear, and conspicuous, and delivered in any manner that will ensure that the customer is likely to receive it. The proposed Guidance provided several examples of proper delivery and stated that an institution may choose to contact all customers affected by telephone or by mail, or for those customers who conduct transactions electronically, using electronic notice.

One commenter representing a large bank trade association agreed that this was a correct standard. However, many other commenters recommended that if it costs an institution more than $250,000 to provide notice to customers, if the affected class of persons to be notified exceeds 500,000, or if an incident warrants large distributions of notices, the final Guidance should permit various forms of mass distribution of information, such as by postings on an Internet Web page and in national or regional media outlets.

Commenters explained that the CDPA contains such a provision.[31]

One commenter suggested that a financial institution should only provide notice in response to inquiries. By contrast, other commenters stated that the final Guidance should make clear that general notice on a Web site is inadequate and that financial institutions should provide individual notice to customers.

The Agencies determined that the provision in the proposed Guidance that notice be delivered in a ''timely, clear, and conspicuous'' manner already appears elsewhere in the Guidance and does not relate to manner of delivery. This phrase appears elsewhere in the final Guidance and is unnecessary here.

The Agencies have decided not to include a provision in the final Guidance that permits notice through a posting on the Web or through the media in order to provide notice to a specific number of customers or where the cost of notice to individual customers would exceed a specific dollar amount. The Agencies believe that the thresholds suggested by commenters would not be appropriate in every case, especially in connection with incidents involving smaller institutions.

Therefore, the final Guidance states that customer notice should be delivered in any manner that is designed to ensure that a customer can reasonably be expected to receive it. This standard places the responsibility on the financial institution to select a method to deliver notice that is designed to ensure that a customer is likely to receive notice.

The final Guidance also provides examples of proper delivery noting that an institution may choose to contact all customers affected by telephone or by mail, or by electronic mail for those customers for whom it has a valid e-mail address and who have agreed to receive electronic communications from the institution.

Some commenters questioned the effect of other laws on the proposed Guidance. A few commenters noted that electronic notice should conform to the requirements of the Electronic Signatures in Global and National Commerce Act (E-Sign Act), 15 U.S.C. 7001 *et seq.*

The final Guidance does not discuss a financial institution's obligations under the E-Sign Act. The Agencies note that the final Guidance specifically contemplates that a financial institution may give notice electronically or by telephone. There is no requirement that notice be provided in writing. Therefore, the final Guidance does not trigger any consent requirements under the E-Sign Act.[32]

Still other commenters requested clarification that a telephone call made to a customer for purposes of complying with the final Guidance is for ''emergency purposes'' under the Telephone Consumer Protection Act, 47 U.S.C. 227 (TCPA). These commenters noted that this is important because under the TCPA and its implementing regulation,[33] it is unlawful to initiate a telephone call to any residential phone line using an artificial or prerecorded voice to deliver a message, without the prior express consent of the called party, unless such call is for ''emergency purposes.''

The final Guidance does not address the TCPA, because the TCPA is interpreted by the Federal Communications Commission (FCC), and the FCC has not yet taken a position on this issue.[34]

## V. Effective Date

Many commenters noted that the proposed Guidance did not contain a delayed effective date. They suggested that the Agencies include a transition period to allow adequate time for financial institutions to implement the final Guidance.

The final Guidance is an interpretation of existing provisions in section 501(b) of the GLBA and the Security Guidelines. A delayed effective date is not required under the APA, 12 U.S.C. 553(d)(2), or the Riegle Community Development and Regulatory Improvement Act of 1994, 12 U.S.C. 4802, which requires a delayed effective date for new regulations, because the final Guidance is a statement of policy.

Given the comments received, the Agencies recognize that not every financial institution currently has a response program that is consistent with the final Guidance. The Agencies expect these institutions to implement the final Guidance as soon as possible. However, we appreciate that some institutions may need additional time to develop new compliance procedures, modify systems, and train staff in order to implement an adequate response program. The Agencies will take into account the good faith efforts made by each institution to develop a response program that is consistent with the final Guidance, together with all other relevant circumstances, when examining the adequacy of an institution's information security program.

## VI. OTS Conforming and Technical Change

OTS is making a conforming, technical change to its Security Procedures Rule at 12 CFR 568.5. That regulation currently provides that savings associations and subsidiaries that are not functionally regulated must comply with the Security Guidelines in Appendix B to part 570. OTS is adding a sentence to make clear that Supplement A to Appendix B is intended as interpretive guidance only.

With regard to this rule change, OTS finds that there is good cause to dispense with prior notice and comment and with the 30-day delay of effective date mandated by the Administrative Procedure Act. 5 U.S.C. 553. OTS believes that these procedures are unnecessary and contrary to the public interest because the revision merely makes conforming and technical changes to an existing provision. A conforming and technical change is necessary to make clear that Supplement A to Appendix B to part 570 is intended as interpretive guidance only. Because the amendment in the rule is not substantive, it will not affect savings associations.

With regard to this rule change, OTS further finds that the Riegle Community Development and Regulatory Improvement Act of 1994 does not apply because the revision imposes no additional requirements and makes only a technical and conforming change to an existing regulation.

[31] *See* CAL. CIV. CODE § 1798.82(g)(3) (West 2005).

[32] Under the E-Sign Act, if a statute, regulation, or other rule of law *requires* that information be provided or made available to a consumer in writing, certain consent procedures apply. *See* 15 U.S.C. 7001(c).

[33] 47 CFR 64.1200.

[34] The Agencies note, however, that the TCPA and its implementing regulations generally exempt calls made to any person with whom the caller has an established business relationship at the time the call is made. *See, e.g.,* 47 CFR 64.1200(a)(1)(iv). Thus, the TCPA would not appear to prohibit a financial institution's telephone calls to its own customers. In addition, the FCC's regulations state that the phrase for ''emergency purposes'' means calls made necessary in any situation affecting the health and safety of consumers. 47 CFR 64.1200(f)(2). *See also* FCC Report and Order adopting rules and regulations implementing the TCPA, October 16, 1992, available at *http://www.fcc.gov/cgb/donotcall/,* paragraph 51 (calls from utilities to notify customers of service outages, and to warn customers of discontinuance of service are included within the exemption for emergencies). Financial institutions will give customer notice under the final Guidance for a public safety purpose, namely, to permit their customers to protect themselves where their sensitive information is likely to be misused, for example, to facilitate identity theft. Therefore, the Agencies believe that the exemption for emergency purposes likely would include customer notice that is provided by telephone using an artificial or prerecorded voice message call.

## VII. Impact of Guidance

The Agencies invited comment on the potential burden associated with the customer notice provisions for financial institutions implementing the proposed Guidance. The Agencies also asked for information about the anticipated burden that may arise from the questions posed by customers who receive the notices. In addition, the proposed Guidance asked whether the Agencies should consider how the burden may vary depending upon the size and complexity of a financial institution. The Agencies also asked for information about the amount of burden, if any, the proposed Guidance would impose on service providers.

Although many commenters representing financial institutions stated that they already have a response program in place, they also noted that the Agencies had underestimated the burden that would be imposed on financial institutions and their customers by the proposed Guidance. Some commenters stated that the proposed Guidance would require greater time, expenditure, and documentation for audit and compliance purposes. Other commenters stated that the costs of providing notice and requiring a sufficient number of appropriately trained employees to be available to answer customer inquiries and provide assistance could be substantial.

Yet other commenters stated that the Agencies failed to adequately consider the burden to customers who begin to receive numerous notices of ''unauthorized access'' to their data. They stated that the stress to customers of having to change account numbers, change passwords, and monitor their credit reports would be enormous and could be unnecessary because the standard in the proposed Guidance would require notice when information subject to unauthorized access might be, but would not necessarily be, misused.

Some commenters maintained that the proposed Guidance would be especially burdensome for small community banks, which one commenter asserted are the lowest risk targets. These commenters stated that the most burdensome elements of the proposed Guidance would be creating a general policy, establishing procedures and training staff. They added that developing and implementing new procedures for determining when, where and how to provide notice and procedures for monitoring accounts would also be burdensome. One commenter recommended that the agencies exempt institutions with assets of under $500 million from having to comply with the Guidance.

Finally, a trade association commenter stated that the notice requirements in the proposed Guidance would impose a large burden on the nationwide consumer reporting agencies, over which they have no control and no means of recouping costs.

The Agencies have addressed the burdens identified by commenters as follows. First, the Agencies eliminated many of the more prescriptive elements of the response program described in the proposed Guidance. The final Guidance states that an institution's response program should be risk-based. It lists a number of components that the program should contain.

The final Guidance does not detail the steps that an institution should take to contain and control a security incident to prevent further unauthorized access to or use of customer information. It also does not state that an institution should secure all accounts that can be accessed using the same account number or name and password combination until such time as the institution and the customer can agree on a course of action. Instead, the final Guidance leaves such measures to the discretion of the institution and gives examples of the steps that an institution should consider, such as monitoring, freezing, or closing affected accounts. Thus, under the final Guidance a small institution may choose to close an affected account in place of monitoring the account, an element of the proposed Guidance that smaller institutions identified as potentially very costly.

Though the final Guidance still states that notification to regulators should be a part of an institution's response program, it states that notice should only be given when the institution becomes aware of an incident of unauthorized access to or use of ''sensitive'' customer information. This standard should result in fewer instances of notice to the regulators than under the proposed Guidance. The final Guidance also makes clear that when the security incident involves a service provider, the institution may authorize the service provider to notify the institution's regulator.

The standard of notice to customers also has been modified to be less burdensome to institutions and their customers. The Agencies believe that under this new standard, customers will be less likely to be alarmed needlessly, and institutions will no longer be asked to prove a negative ''namely, that misuse of information is unlikely to occur. In addition, the Agencies also have provided institutions with greater discretion to determine what should be contained in a notice to customers.

The Agencies do not believe that there is a basis for exempting small institutions from the Guidance. For example, many small institutions outsource functions to large service providers that have been the target of those seeking to misuse customer information. Therefore, the Agencies believe that all institutions should prepare customer response programs including customer notification procedures that can be used in the event the institution determines that misuse of its information about a customer has occurred or is reasonably possible. However, as noted above, the Agencies recognize that within the framework of the Guidance, an institution's program will vary depending on the size and complexity of the institution and the nature and scope of its activities.

Finally, to address comments relating to the potential burden on the nationwide consumer reporting agencies, as noted previously, the Guidance no longer suggests that customer notice always include advice to contact the nationwide consumer reporting agencies. The Agencies recognize that not all security breaches warrant such contacts. For example, we recognize that it may not always be in the best interest of a consumer to have a fraud alert placed in the consumer's file because the fraud alert may have an adverse impact on the consumer's ability to obtain credit.

## VIII. Regulatory Analysis

### *A. Paperwork Reduction Act*

Burden Estimates for the OCC, FDIC, and OTS

Certain provisions of the final Guidance contain ''collection of information'' requirements as defined in the Paperwork Reduction Act of 1995 (44 U.S.C. 3501 *et seq.*) (PRA). An agency may not conduct or sponsor, and a respondent is not required to respond to, an information collection unless it displays a currently valid Office of Management and Budget (OMB) control number.

The Agencies requested comment on a proposed information collection as part of the notice requesting comment on the proposed Guidance. An analysis of the comments related to paperwork burden and commenters' recommendations is provided below. The OCC, FDIC, and OTS submitted their proposed information collections to OMB for review and approval and the collections have been approved.

*OCC:* 1557–0227

*FDIC:* 3064–0145
*OTS:* 1550–0110

The Agencies have reconsidered the burden estimates published in the Proposed Guidance in light of the comments received asserting that the paperwork burden associated with the information collection were underestimated, and in light of measures taken by the Agencies to reduce burden in this final Guidance. The Agencies agreed to increase the estimate for the time it will take an institution to develop notices and determine which customers should be notified. However, revisions incorporated into the final Guidance will result in the issuance of fewer notices than was originally estimated. A discussion of the comments received follows the revised estimates.

*New Estimates:*

*OCC*

*Number of Respondents:* 2,200.
*Estimated Time per Response:*
*Developing Notices:* 24 hours × 2,200 = 52,800 hours.
*Notifying Customers:* 29 hours × 36 = 1,044 hours.
*Total Estimated Annual Burden* = 53,844 hours.

*FDIC*

*Number of Respondents:* 5,200.
*Estimated Time per Response:*
*Developing Notices:* 24 hours × 5,200 = 124,800 hours.
*Notifying Customers:* 29 hours × 91 = 2,639 hours.
*Total Estimated Annual Burden* = 127,439 hours.

*OTS*

*Number of Respondents:* 880.
*Estimated Time per Response:*
*Developing Notices:* 24 hours × 880 = 21,120 hours.
*Notifying Customers:* 29 hours × 15 = 435 hours.
*Total Estimated Annual Burden* = 21,555 hours.

*Burden Estimate for the Board:*

While this represents a statement of policy, certain provisions of the final Guidance encourage ''collection of information.'' *See* 44 U.S.C. 3501 *et seq.* In the spirit of the PRA, the Board requested comment on the burden associated with a proposed information collection as part of the notice requesting comment on the proposed Guidance. The Board has approved this final information collection under its delegated authority from OMB.

*FRB [To Be Assigned]*

*Number of Respondents:* 6,692.
*Estimated Time per Response:*
*Developing Notices:* 24 hours × 6,692 = 160,608 hours.
*Notifying Customers:* 29 hours × 110 = 3,190 hours.
*Total Estimated Annual Burden* = 163,798 hours.

*Discussion of Comments:*

The information collection in the proposed Guidance stated that financial institutions should: (1) Develop notices to customers; and (2) determine which customers should receive the notices and send the notices to customers. The Agencies received various comments regarding the Agencies' burden estimates, including the estimated time per response and the number of recordkeepers involved.

Some commenters stated that the burden estimates of twenty hours to develop and produce notices and three days to determine which customers should receive notice in the proposed Guidance were too low. These commenters stated that the Guidance should include language indicating that an institution be given as much time as necessary to determine the scope of an incident and examine which customers may be affected. One of these commenters stated that ten business days, as recommended by the California Department of Consumer Affairs Office of Privacy Protection, should provide an institution with a known safe harbor to complete the steps described lest regulated entities be subject to inconsistent notification deadlines from the same incident.

These commenters misunderstood the meaning of PRA burden estimates. PRA burden estimates are judgments by Agencies regarding the length of time that it would take institutions to comply with information collection requirements. These estimates do not impose a deadline upon institutions to complete a requirement within a specific period of time.

The final Guidance states that an institution should notify customers ''as soon as possible'' after an investigation leads it to conclude that misuse of customer information has occurred or is reasonably possible. It also states that notification may be delayed at the written request of law enforcement.

The cost of disclosing information is considered part of the burden of an information collection. 5 CFR 1320.3(b)(1)(ix). Many commenters stated that the Agencies had underestimated the cost associated with disclosing security incidents to customers pursuant to the proposed Guidance. However, these commenters did not distinguish between the usual and customary costs of doing business and the costs of the disclosures associated with the information collection in the proposed Guidance.

For example, one commenter stated that the Agencies' estimates did not include $0.60 per customer for a one-page letter, envelope, and first class postage; the customer service time, handling the enormous number of calls from customers who receive notice; or the costs associated with closing or reopening accounts, printing new checks or embossing new cards. This commenter stated that printing and mailing costs, alone, for one notice to its customer database, at current postal rates, would be at least $500,000.

Some of the costs mentioned in this comment are non-labor costs associated with providing disclosures. The Agencies assumed that non-labor costs associated with the disclosures would be negligible, because institutions already have in place well-developed systems for providing disclosures to their customers. This comment and any other comments received regarding the Agencies' assumptions about non-labor costs will be taken into account in any future estimate of the burden for this collection.

Other costs mentioned in this comment, such as the cost of customer service time, printing checks, and embossing cards, are costs that the institution would incur regardless of the implementation of the final Guidance. These costs are not associated with an information collection, and, therefore, have not been factored into the Agencies' cost estimates.

In addition, the estimates in this comment are based on the assumption that notice should always be provided by mail. However, the final Guidance states that financial institutions should deliver customer notice in any manner designed to ensure that a customer can reasonably be expected to receive it, such as by telephone, mail, or electronically for those customers for whom it has a valid e-mail address and who have agreed to receive communications electronically. The Agencies assume that given this flexibility, financial institutions may not necessarily choose to mail notices in every case, but may choose less expensive methods of delivery that ensure customers will reasonably be expected to receive notice.

Another commenter concerned about the burdens imposed on consumer reporting agencies provided an example of a security breach involving a single company from which identifying information about 500,000 military families was stolen. Among other things, the company's notice to its customers advised them to contact the

nationwide consumer reporting agencies. The commenter stated that the nationwide consumer reporting agencies spent approximately $1.5 million per company, handling approximately 365,000 inquiries from the company's customers.

The final Guidance contains a number of changes that will diminish the costs identified by these commenters. First, the standard for notification in the final Guidance likely will result in fewer notices. In addition, the final Guidance no longer states that all notices should advise customers to contact the nationwide consumer reporting agencies. Therefore, the Agencies' estimates do not factor in the costs to the reporting agencies.

*B. Regulatory Flexibility Act*

The Regulatory Flexibility Act applies only to rules for which an agency publishes a general notice of proposed rulemaking pursuant to 5 U.S.C. 553(b). *See* 5 U.S.C. 601(2). As previously noted, a general notice of proposed rulemaking was not published because this final Guidance is a general statement of policy. Thus, the Regulatory Flexibility Act does not apply to the final Guidance.

With respect to OTS's revision to its regulation at 12 CFR 568.5, as noted above, OTS has concluded that there is good cause to dispense with prior notice and comment. Accordingly, OTS has further concluded that the Regulatory Flexibility Act does not apply to this final rule.

*C. Executive Order 12866*

The OCC and OTS have determined that this final Guidance is not a significant regulatory action under Executive Order 12866. With respect to OTS's revision to its regulation at 12 CFR 568.5, OTS has further determined that this final rule is not a significant regulatory action under Executive Order 12866.

*D. Unfunded Mandates Reform Act of 1995*

The OCC and OTS have determined that this final Guidance is not a regulatory action that would require an assessment under the Unfunded Mandates Reform Act of 1995 (UMRA), 2 U.S.C. 1531. The final Guidance is a general statement of policy and, therefore, the OCC and OTS have determined that the UMRA does not apply.

With respect to OTS's revision to its regulation at 12 CFR 568.5, as noted above, OTS has concluded that there is good cause to dispense with prior notice and comment. Accordingly, OTS has concluded that the UMRA does not require an unfunded mandates analysis.

## Text of Common Final Guidance

The text of the Agencies' common final Guidance reads as follows:

**Supplement A to Appendix _ to Part _—Interagency Guidance on Response Programs for Unauthorized Access to Customer Information and Customer Notice**

**I. Background**

This Guidance [1] interprets section 501(b) of the Gramm-Leach-Bliley Act (''GLBA'') and the Interagency Guidelines Establishing Information Security Standards (the ''Security Guidelines'')[2] and describes response programs, including customer notification procedures, that a financial institution should develop and implement to address unauthorized access to or use of customer information that could result in substantial harm or inconvenience to a customer. The scope of, and definitions of terms used in, this Guidance are identical to those of the Security Guidelines. For example, the term ''customer information'' is the same term used in the Security Guidelines, and means any record containing nonpublic personal information about a customer, whether in paper, electronic, or other form, maintained by or on behalf of the institution.

*A. Interagency Security Guidelines*

Section 501(b) of the GLBA required the Agencies to establish appropriate standards for financial institutions subject to their jurisdiction that include administrative, technical, and physical safeguards, to protect the security and confidentiality of customer information. Accordingly, the Agencies issued Security Guidelines requiring every financial institution to have an information security program designed to:

1. Ensure the security and confidentiality of customer information;

2. Protect against any anticipated threats or hazards to the security or integrity of such information; and

3. Protect against unauthorized access to or use of such information that could result in substantial harm or inconvenience to any customer.

*B. Risk Assessment and Controls*

1. The Security Guidelines direct every financial institution to assess the following risks, among others, when developing its information security program:

a. Reasonably foreseeable internal and external threats that could result in unauthorized disclosure, misuse, alteration, or destruction of customer information or customer information systems;

b. The likelihood and potential damage of threats, taking into consideration the sensitivity of customer information; and

c. The sufficiency of policies, procedures, customer information systems, and other arrangements in place to control risks.[3]

2. Following the assessment of these risks, the Security Guidelines require a financial institution to design a program to address the identified risks. The particular security measures an institution should adopt will depend upon the risks presented by the complexity and scope of its business. At a minimum, the financial institution is required to consider the specific security measures enumerated in the Security Guidelines,[4] and adopt those that are appropriate for the institution, including:

a. Access controls on customer information systems, including controls to authenticate and permit access only to authorized individuals and controls to prevent employees from providing customer information to unauthorized individuals who may seek to obtain this information through fraudulent means;

b. Background checks for employees with responsibilities for access to customer information; and

c. Response programs that specify actions to be taken when the financial institution suspects or detects that unauthorized individuals have gained access to customer information systems, including appropriate reports to regulatory and law enforcement agencies.[5]

*C. Service Providers*

The Security Guidelines direct every financial institution to require its service providers by contract to implement appropriate measures designed to protect against unauthorized access to or use of customer information that could result in substantial harm or inconvenience to any customer.[6]

**II. Response Program**

Millions of Americans, throughout the country, have been victims of identity theft.[7] Identity thieves misuse personal information they obtain from a number of sources, including financial institutions, to perpetrate identity theft. Therefore, financial institutions should take preventative measures to safeguard customer information against attempts to gain unauthorized access to the information. For example, financial

[1] This Guidance is being jointly issued by the Board of Governors of the Federal Reserve System (Board), the Federal Deposit Insurance Corporation (FDIC), the Office of the Comptroller of the Currency (OCC), and the Office of Thrift Supervision (OTS).

[2] 12 CFR part 30, app. B (OCC); 12 CFR part 208, app. D–2 and part 225, app. F (Board); 12 CFR part 364, app. B (FDIC); and 12 CFR part 570, app. B (OTS). The ''Interagency Guidelines Establishing Information Security Standards'' were formerly known as ''The Interagency Guidelines Establishing Standards for Safeguarding Customer Information.''

[3] *See* Security Guidelines, III.B.

[4] *See* Security Guidelines, III.C.

[5] *See* Security Guidelines, III.C.

[6] *See* Security Guidelines, II.B. and III.D. Further, the Agencies note that, in addition to contractual obligations to a financial institution, a service provider may be required to implement its own comprehensive information security program in accordance with the Safeguards Rule promulgated by the Federal Trade Commission (''FTC''), 12 CFR part 314.

[7] The FTC estimates that nearly 10 million Americans discovered they were victims of some form of identity theft in 2002. *See* The Federal Trade Commission, *Identity Theft Survey Report,* (September 2003), available at *http://www.ftc.gov/os/2003/09/synovatereport.pdf.*

institutions should place access controls on customer information systems and conduct background checks for employees who are authorized to access customer information.[8] However, every financial institution should also develop and implement a risk-based response program to address incidents of unauthorized access to customer information in customer information systems[9] that occur nonetheless. A response program should be a key part of an institution's information security program.[10] The program should be appropriate to the size and complexity of the institution and the nature and scope of its activities.

In addition, each institution should be able to address incidents of unauthorized access to customer information in customer information systems maintained by its domestic and foreign service providers. Therefore, consistent with the obligations in the Guidelines that relate to these arrangements, and with existing guidance on this topic issued by the Agencies,[11] an institution's contract with its service provider should require the service provider to take appropriate actions to address incidents of unauthorized access to the financial institution's customer information, including notification to the institution as soon as possible of any such incident, to enable the institution to expeditiously implement its response program.

*A. Components of a Response Program*

1. At a minimum, an institution's response program should contain procedures for the following:

a. Assessing the nature and scope of an incident, and identifying what customer information systems and types of customer information have been accessed or misused;

b. Notifying its primary Federal regulator as soon as possible when the institution becomes aware of an incident involving unauthorized access to or use of *sensitive* customer information, as defined below;

c. Consistent with the Agencies' Suspicious Activity Report (''SAR'') regulations,[12] notifying appropriate law enforcement authorities, in addition to filing a timely SAR in situations involving Federal criminal violations requiring immediate attention, such as when a reportable violation is ongoing;

d. Taking appropriate steps to contain and control the incident to prevent further unauthorized access to or use of customer information, for example, by monitoring, freezing, or closing affected accounts, while preserving records and other evidence;[13] and

e. Notifying customers when warranted.

2. Where an incident of unauthorized access to customer information involves customer information systems maintained by an institution's service providers, it is the responsibility of the financial institution to notify the institution's customers and regulator. However, an institution may authorize or contract with its service provider to notify the institution's customers or regulator on its behalf.

**III. Customer Notice**

Financial institutions have an affirmative duty to protect their customers' information against unauthorized access or use. Notifying customers of a security incident involving the unauthorized access or use of the customer's information in accordance with the standard set forth below is a key part of that duty. Timely notification of customers is important to manage an institution's reputation risk. Effective notice also may reduce an institution's legal risk, assist in maintaining good customer relations, and enable the institution's customers to take steps to protect themselves against the consequences of identity theft. When customer notification is warranted, an institution may not forgo notifying its customers of an incident because the institution believes that it may be potentially embarrassed or inconvenienced by doing so.

*A. Standard for Providing Notice*

When a financial institution becomes aware of an incident of unauthorized access to sensitive customer information, the institution should conduct a reasonable investigation to promptly determine the likelihood that the information has been or will be misused. If the institution determines that misuse of its information about a customer has occurred or is reasonably possible, it should notify the affected customer as soon as possible. Customer notice may be delayed if an appropriate law enforcement agency determines that notification will interfere with a criminal investigation and provides the institution with a written request for the delay. However, the institution should notify its customers as soon as notification will no longer interfere with the investigation.

1. Sensitive Customer Information

Under the Guidelines, an institution must protect against unauthorized access to or use of customer information that could result in substantial harm or inconvenience to any customer. Substantial harm or inconvenience is most likely to result from improper access to *sensitive customer information* because this type of information is most likely to be misused, as in the commission of identity theft. For purposes of this Guidance, *sensitive customer information* means a customer's name, address, or telephone number, in conjunction with the customer's social security number, driver's license number, account number, credit or debit card number, or a personal identification number or password that would permit access to the customer's account. *Sensitive customer information* also includes any combination of components of customer information that would allow someone to log onto or access the customer's account, such as user name and password or password and account number.

2. Affected Customers

If a financial institution, based upon its investigation, can determine from its logs or other data precisely which customers' information has been improperly accessed, it may limit notification to those customers with regard to whom the institution determines that misuse of their information has occurred or is reasonably possible. However, there may be situations where the institution determines that a group of files has been accessed improperly, but is unable to identify which specific customers' information has been accessed. If the circumstances of the unauthorized access lead the institution to determine that misuse of the information is reasonably possible, it should notify all customers in the group.

*B. Content of Customer Notice*

1. Customer notice should be given in a clear and conspicuous manner. The notice should describe the incident in general terms and the type of customer information that was the subject of unauthorized access or use. It also should generally describe what the institution has done to protect the

[8] Institutions should also conduct background checks of employees to ensure that the institution does not violate 12 U.S.C. 1829, which prohibits an institution from hiring an individual convicted of certain criminal offenses or who is subject to a prohibition order under 12 U.S.C. 1818(e)(6).

[9] Under the Guidelines, an institution's *customer information systems* consist of all of the methods used to access, collect, store, use, transmit, protect, or dispose of customer information, including the systems maintained by its service providers. *See* Security Guidelines, I.C.2.d (I.C.2.c for OTS).

[10] *See* FFIEC Information Technology Examination Handbook, Information Security Booklet, Dec. 2002 available at *http://www.ffiec.gov/ffiecinfobase/html_pages/infosec_book_frame.htm.* Federal Reserve SR 97–32, Sound Practice Guidance for Information Security for Networks, Dec. 4, 1997; OCC Bulletin 2000–14, ''Infrastructure Threats—Intrusion Risks'' (May 15, 2000), for additional guidance on preventing, detecting, and responding to intrusions into financial institution computer systems.

[11] *See* Federal Reserve SR Ltr. 00–04, Outsourcing of Information and Transaction Processing, Feb. 9, 2000; OCC Bulletin 2001–47, ''Third-Party Relationships Risk Management Principles,'' Nov. 1, 2001; FDIC FIL 68–99, Risk Assessment Tools and Practices for Information System Security, July 7, 1999; OTS Thrift Bulletin 82a, Third Party Arrangements, Sept. 1, 2004.

[12] An institution's obligation to file a SAR is set out in the Agencies' SAR regulations and Agency guidance. *See* 12 CFR 21.11 (national banks, Federal branches and agencies); 12 CFR 208.62 (State member banks); 12 CFR 211.5(k) (Edge and agreement corporations); 12 CFR 211.24(f) (uninsured State branches and agencies of foreign banks); 12 CFR 225.4(f) (bank holding companies and their nonbank subsidiaries); 12 CFR part 353 (State non-member banks); and 12 CFR 563.180 (savings associations). National banks must file SARs in connection with computer intrusions and other computer crimes. *See* OCC Bulletin 2000–14, ''Infrastructure Threats—Intrusion Risks'' (May 15, 2000); Advisory Letter 97–9, ''Reporting Computer Related Crimes'' (November 19, 1997) (general guidance still applicable though instructions for new SAR form published in 65 FR 1229, 1230 (January 7, 2000)). *See also* Federal Reserve SR 01–11, Identity Theft and Pretext Calling, Apr. 26, 2001; SR 97–28, Guidance Concerning Reporting of Computer Related Crimes by Financial Institutions, Nov. 6, 1997; FDIC FIL 48–2000, Suspicious Activity Reports, July 14, 2000; FIL 47–97, Preparation of Suspicious Activity Reports, May 6, 1997; OTS CEO Memorandum 139, Identity Theft and Pretext Calling, May 4, 2001; CEO Memorandum 126, New Suspicious Activity Report Form, July 5, 2000; *http://www.ots.treas.gov/BSA* (for the latest SAR form and filing instructions required by OTS as of July 1, 2003).

[13] *See* FFIEC Information Technology Examination Handbook, Information Security Booklet, Dec. 2002, pp. 68–74.

customers' information from further unauthorized access. In addition, it should include a telephone number that customers can call for further information and assistance.[14] The notice also should remind customers of the need to remain vigilant over the next twelve to twenty-four months, and to promptly report incidents of suspected identity theft to the institution. The notice should include the following additional items, when appropriate:

a. A recommendation that the customer review account statements and immediately report any suspicious activity to the institution;

b. A description of fraud alerts and an explanation of how the customer may place a fraud alert in the customer's consumer reports to put the customer's creditors on notice that the customer may be a victim of fraud;

c. A recommendation that the customer periodically obtain credit reports from each nationwide credit reporting agency and have information relating to fraudulent transactions deleted;

d. An explanation of how the customer may obtain a credit report free of charge; and

e. Information about the availability of the FTC's online guidance regarding steps a consumer can take to protect against identity theft. The notice should encourage the customer to report any incidents of identity theft to the FTC, and should provide the FTC's Web site address and toll-free telephone number that customers may use to obtain the identity theft guidance and report suspected incidents of identity theft.[15]

2. The Agencies encourage financial institutions to notify the nationwide consumer reporting agencies prior to sending notices to a large number of customers that include contact information for the reporting agencies.

*C. Delivery of Customer Notice*

Customer notice should be delivered in any manner designed to ensure that a customer can reasonably be expected to receive it. For example, the institution may choose to contact all customers affected by telephone or by mail, or by electronic mail for those customers for whom it has a valid e-mail address and who have agreed to receive communications electronically.

**Adoption of Final Guidance**

The agency-specific adoption of the common final Guidance, which appears at the end of the common preamble, follows.

[14] The institution should, therefore, ensure that it has reasonable policies and procedures in place, including trained personnel, to respond appropriately to customer inquiries and requests for assistance.

[15] Currently, the FTC Web site for the ID Theft brochure and the FTC Hotline phone number are *http://www.consumer.gov/idtheft* and 1–877–IDTHEFT. The institution may also refer customers to any materials developed pursuant to section 151(b) of the FACT Act (educational materials developed by the FTC to teach the public how to prevent identity theft).

**List of Subjects**

*12 CFR Part 30*

Banks, banking, Consumer protection, National banks, Privacy, Reporting and recordkeeping requirements.

*12 CFR Part 208*

Banks, banking, Consumer protection, Information, Privacy, Reporting and recordkeeping requirements.

*12 CFR Part 225*

Banks, banking, Holding companies, Reporting and recordkeeping requirements.

*12 CFR Part 364*

Administrative practice and procedure, Bank deposit insurance, Banks, banking, Reporting and recordkeeping requirements, Safety and Soundness.

*12 CFR Part 568*

Consumer protection, Privacy, Reporting and recordkeeping requirements, Savings associations, Security measures.

*12 CFR Part 570*

Accounting, Administrative practice and procedure, Bank deposit insurance, Consumer protection, Holding companies, Privacy, Reporting and recordkeeping requirements, Safety and soundness, Savings associations.

**Department of the Treasury**

**Office of the Comptroller of the Currency**

**12 CFR CHAPTER I**

**Authority and Issuance**

■ For the reasons set out in the joint preamble, the OCC amends part 30 of chapter I of title 12 of the Code of Federal Regulations to read as follows:

## PART 30—SAFETY AND SOUNDNESS STANDARDS

■ 1. The authority citation for part 30 continues to read as follows:

**Authority:** 12 U.S.C. 93a, 371, 1818, 1831p, 3102(b); 15 U.S.C. 1681s, 1681w, 6801, 6805(b)(1).

■ 2. Revise the heading of Appendix B to read as follows:

**Appendix B to Part 30—Interagency Guidelines Establishing Information Security Standards**

* * * * *

■ 3. Amend Appendix B to part 30 by adding a new Supplement A to the end of the appendix to read as set forth at the end of the common preamble.

Dated: March 8, 2005.

**Julie L. Williams,**

*Acting Comptroller of the Currency.*

**FEDERAL RESERVE SYSTEM**

**12 CFR CHAPTER II**

**Authority and Issuance**

■ For the reasons set out in the joint preamble, the Board amends part 208 and 225 of chapter II of title 12 of the Code of Federal Regulations to read as follows:

## PART 208—MEMBERSHIP OF STATE BANKING INSTITUTIONS IN THE FEDERAL RESERVE SYSTEM (REGULATION H)

■ 1. The authority citation for 12 CFR part 208 continues to read as follows:

**Authority:** 12 U.S.C. 24, 36, 92a, 93a, 248(a), 248(c), 321–338a, 371d, 461, 481–486, 601, 611, 1814, 1816, 1820(d)(9), 1823(j), 1828(o), 1831, 1831o, 1831p–1, 1831r–1, 1831w, 1831x, 1835a, 1882, 2901–2907, 3105, 3310, 3331–3351, and 3906–3909, 15 U.S.C. 78b, 78l(b), 78l(g), 78l(i), 78o–4(c)(5), 78q, 78q–1, 78w, 1681s, 1681w, 6801 and 6805; 31 U.S.C. 5318, 42 U.S.C. 4012a, 4104a, 4104b, 4106, and 4128.

■ 2. Revise the heading of Appendix D–Z to read as follows:

**Appendix D–2 to Part 208—Interagency Guidelines Establishing Information Security Standards.**

* * * * *

■ 3. Amend Appendix D–2 to part 208 by adding a new Supplement A to the end of the appendix to read as set forth at the end of the common preamble.

## PART 225—BANK HOLDING COMPANIES AND CHANGE IN BANK CONTROL (REGULATION Y)

■ 4. The authority citation for 12 CFR part 225 is revised to read as follows:

**Authority:** 12 U.S.C. 1817(j)(13), 1818, 1828(o), 1831i, 1831p–1, 1843(c)(8), 1844(b), 1972(1), 3106, 3108, 3310, 3331–3351, 3906, 3907, and 3909; 15 U.S.C. 1681s, 1681w, 6801 and 6805.

■ 5. Revise the heading of Appendix F to read as follows:

**Appendix F to Part 225—Interagency Guidelines Establishing Information Security Standards**

* * * * *

■ 6. Amend Appendix F to part 225 by adding a new Supplement A to the end of the appendix to read as set forth at the end of the common preamble.

By order of the Board of Governors of the Federal Reserve System, March 21, 2005.

**Jennifer J. Johnson,**

*Secretary of the Board.*

## FEDERAL DEPOSIT INSURANCE CORPORATION

### 12 CFR CHAPTER III

### Authority and Issuance

■ For the reasons set out in the joint preamble, the FDIC amends part 364 of chapter III of title 12 of the Code of Federal Regulations to read as follows:

## PART 364—STANDARDS FOR SAFETY AND SOUNDNESS

■ 1. The authority citation for part 364 is revised to read as follows:

**Authority:** 12 U.S.C. 1818 and 1819 (Tenth); 15 U.S.C. 1681b, 1681s, and 1681w.

■ 2. Revise the heading of Appendix B to read as follows:

### Appendix B to Part 364—Interagency Guidelines Establishing Information Security Standards

* * * * *

■ 3. Amend Appendix B to part 364 by adding a new Supplement A to the end of the appendix to read as set forth at the end of the common preamble.

Dated at Washington, DC, this 18th day of March, 2005.

By order of the Board of Directors.

Federal Deposit Insurance Corporation.

**Robert E. Feldman,**

*Executive Secretary.*

## DEPARTMENT OF THE TREASURY

### Office of Thrift Supervision

### 12 CFR CHAPTER V

### Authority and Issuance

■ For the reasons set out in the joint preamble, the OTS amends parts 568 and 570 of chapter V of title 12 of the Code of Federal Regulations to read as follows:

## PART 568—SECURITY PROCEDURES

■ 1. Revise the part heading for part 568 to read as shown above.

■ 2. Revise the authority citation for part 568 to read as follows:

**Authority:** 12 U.S.C. 1462a, 1463, 1464, 1467a, 1828, 1831p–1, 1881–1884; 15 U.S.C. 1681s and 1681w; 15 U.S.C. 6801 and 6805(b)(1).

■ 3. Amend § 568.5 by adding a new sentence after the final sentence to read as follows:

**§ 568.5 Protection of customer information.**

* * * Supplement A to Appendix B to part 570 provides interpretive guidance.

## PART 570—SAFETY AND SOUNDNESS GUIDELINES AND COMPLIANCE PROCEDURES

■ 4. Revise the authority citation for part 570 to read as follows:

**Authority:** 12 U.S.C. 1462a, 1463, 1464, 1467a, 1828, 1831p–1, 1881–1884; 15 U.S.C. 1681s and 1681w; 15 U.S.C. 6801 and 6805(b)(1).

■ 5. Revise the heading of Appendix B to part 570 to read as follows:

### Appendix B to Part 570—Interagency Guidelines Establishing Information Security Standards

* * * * *

■ 6. Amend Appendix B to part 570 by adding a new Supplement A to the end of the appendix to read as set forth at the end of the common preamble.

Dated: March 8, 2005.

By the Office of Thrift Supervision.

**James E. Gilleran,**

*Director.*

[FR Doc. 05–5980 Filed 3–28–05; 8:45 am]

BILLING CODE 4810–33–P; (25%); 6210–01–P; (25%); 6714–01–P; (25%); 6720–01–P (25%)

---

## DEPARTMENT OF TRANSPORTATION

### Federal Aviation Administration

### 14 CFR Part 71

**[Docket No. FAA–2004–19911; Airspace Docket No. 04–ASO–20]**

## Establishment of Class E Airspace; Cocoa Beach Patrick AFB, FL

**AGENCY:** Federal Aviation Administration (FAA), DOT.

**ACTION:** Final rule.

**SUMMARY:** This action establishes Class E4 airspace at Cocoa Beach Patrick AFB, FL. Class E4 airspace designated as an extension to Class D airspace is required when the control tower is open to contain existing Standard Instrument Approach Procedures (SIAPs) and other Instrument Flight Rules (IFR) operations at the airport. This action establishes a Class E4 airspace extension that is 6.8 miles wide and extends 7.3 miles northeast of the airport.

**EFFECTIVE DATE:** 0901 UTC, July 7, 2005.

**FOR FURTHER INFORMATION CONTACT:** Mark D. Ward, Manager, Airspace and Operations Branch, Eastern En Route and Oceanic Service Area, Federal Aviation Administration, P.O. Box 20636, Atlanta, Georgia 30320; telephone (404) 305–5586.

**SUPPLEMENTARY INFORMATION:**

### History

On January 21, 2005, the FAA proposed to amend part 71 of the Federal Aviation Regulations (14 CFR part 71) by establishing Class E4 airspace Cocoa Beach Patrick AFB, FL, (70 FR 3155). This action provides adequate Class E4 airspace for IFR operations at Cocoa Beach Patrick AFB. Class E airspace designations for airspace areas designated as an extension to a Class D airspace area are published in Paragraph 6004 of FAA Order 7400.9M, dated August 30, 2004, and effective September 16, 2004, which is incorporated by reference in 14 CFR 71.1. The Class E airspace designation listed in this document will be published subsequently in the Order.

Interested parties were invited to participate in this rulemaking proceeding by submitting written comments on the proposal to the FAA. No comments objecting to the proposal were received.

### The Rule

This amendment to Part 71 of the Federal Aviation Regulations (14 CFR part 71) establishes Class E4 airspace and at Cocoa Beach Patrick AFB, FL.

The FAA has determined that this regulation only involves an established body of technical regulations for which frequent and routine amendments are necessary to keep them operationally current. It, therefore, (1) is not a ''significant regulatory action'' under Executive Order 12866; (2) is not a ''significant rule'' under DOT Regulatory Policies and Procedures (44 FR 11034; February 26, 1979); and (3) does not warrant preparation of a regulatory evaluation as the anticipated impact is so minimal. Since this is a routine matter that will only affect air traffic procedures and air navigation, it is certified that this rule will not have a significant economic impact on a substantial number of small entities under the criteria of the Regulatory Flexibility Act.

### List of Subjects in 14 CFR Part 71

Airspace, Incorporation by reference, Navigation (air).

### Adoption of Amendment

■ In consideration of the foregoing, the Federal Aviation Administration amends 14 CFR part 71 as follows:

## PART 71—DESIGNATION OF CLASS A, CLASS B, CLASS C, CLASS D AND CLASS E AIRSPACE AREAS; AIRWAYS; ROUTES; AND REPORTING POINTS

■ 1. The authority citation for 14 CFR part 71 continues to read as follows:

**Authority:** 49 U.S.C. 106(g); 40103, 40113, 40120; EO 10854, 24 FR 9565, 3 CFR, 1959–1963 Comp., p. 389; 14 CFR 11.69.

### § 71.1 Amended

■ 2. The incorporation by reference in 14 CFR 71.1 of Federal Aviation Administration Order 7400.9M, Airspace Designations and Reporting Points, dated August 30, 2004, and effective September 16, 2004, is amended as follows:

*Paragraph 6004 Class E4 Airspace Areas Designated as an Extension to a Class D or Class E Surface Area.*

* * * * *

**ASO FL E4 Cocoa Beach Patrick AFB, FL [NEW]**

Cocoa Beach, Patrick Air Force Base, FL
(Lat. 28°14′06″ N, long. 80°36′36″ W)

That airspace extending upward from the surface within 3.4 miles each side of the Patrick TACAN 034° radial, extending from the 5.3-mile radius to 7.3 miles northeast of the airport. This Class E airspace is effective during the specific days and times established in advance by a Notice to Airmen. The effective days and times will thereafter be continuously published in the Airport/Facility Directory.

* * * * *

Issued in College Park, Georgia, on March 11, 2005.

**Mark D. Ward,**

*Acting Area Director, Air Traffic Division, Southern Region.*

[FR Doc. 05–6069 Filed 3–28–05; 8:45 am]

BILLING CODE 4910–13–M

---

## DEPARTMENT OF HEALTH AND HUMAN SERVICES

### Food and Drug Administration

### 21 CFR Part 80

**[Docket No. 2005N–0077]**

## Color Additive Certification; Increase in Fees for Certification Services

**AGENCY:** Food and Drug Administration, HHS.

**ACTION:** Interim final rule; opportunity for public comment.

**SUMMARY:** The Food and Drug Administration (FDA) is issuing an interim final rule to amend the color additive regulations by increasing the fees for certification services. The change in fees will allow FDA to continue to maintain an adequate color certification program as required by the Federal Food, Drug, and Cosmetic Act (the act). The fees are intended to recover the full costs of operation of FDA's color certification program.

**DATES:** The interim final rule is effective April 28, 2005. Submit written or electronic comments by May 31, 2005.

**ADDRESSES:** You may submit comments, identified by Docket No. 2005N–0077 by any of the following methods:

- Federal eRulemaking Portal: *http://www.regulations.gov*. Follow the instructions for submitting comments.
- Agency Web site: *http://www.fda.gov/dockets/ecomments*. Follow the instructions for submitting comments on the agency Web site.
- E-mail: *fdadockets@oc.fda.gov*. Include Docket No. 2005N–0077 in the subject line of your e-mail message.
- FAX: 301–827–6870.
- Mail/Hand delivery/Courier [For paper, disk, or CD–ROM submissions]: Division of Dockets Management (HFA–305), Food and Drug Administration, 5630 Fishers Lane, rm. 1061, Rockville, MD 20852.

*Instructions*: All submissions received must include the agency name and Docket No(s). or Regulatory Information Number (RIN) for this rulemaking. All comments received will be posted without change to *http://www.fda.gov/ohrms/dockets/default.htm*, including any personal information provided. For detailed instructions on submitting comments and additional information on the rulemaking process, see the ''Opportunity for Public Comment'' heading of the **SUPPLEMENTARY INFORMATION** section of this document.

*Docket*: For access to the docket to read background documents or comments received, go to *http://www.fda.gov/ohrms/dockets/default.htm* and insert the docket number(s), found in brackets in the heading of this document, into the ''Search'' box and follow the prompts and/or go to the Division of Dockets Management, 5630 Fishers Lane, rm. 1061, Rockville, MD 20852.

**FOR FURTHER INFORMATION CONTACT:** Robert MacLeod, Division of Budget Execution (HFA–140), Food and Drug Administration, 5600 Fishers Lane, Rockville, MD 20857, 301–887–3923; and Theodor J. Dougherty, Division of Accounting (HFA–120), Food and Drug Administration, 5600 Fishers Lane, Rockville, MD 20857, 301–827–5032.

**SUPPLEMENTARY INFORMATION:**

### I. Background

FDA is increasing the fees provided for in the agency's regulations for certifying color additives. This modification is necessary because of a general increase in all costs of operating the certification program.

The fee schedule for color additive certification is designed to cover all the costs involved in certifying batches of color additives. This includes both the cost of specific tests required by the regulations and the general costs associated with the certification program, such as costs of accounting, reviewing data, issuing certificates, and conducting research and establishment inspections.

Section 721(e) of the act (21 U.S.C. 379(e)) requires that fees necessary to provide, maintain, and equip an adequate color additive certification program be specified in agency regulations. The current fee schedule specified in the regulations became effective in 1994. Since 1994, the costs of the certification program significantly increased as a result of escalating staff payroll, rent and facility charges, as well as general operational expenses including equipment.

As is evidenced by the increased costs incurred since 1994, the current fee schedule is insufficient to provide, equip, and maintain an adequate certification service. Therefore, an immediate increase is necessary. All cost estimates are described in the ''2003 Color Certification Fee Study.'' A copy of this document is on file at the Division of Dockets Management (see **ADDRESSES**).

### II. Effective Date

The agency is issuing this amendment as an interim final rule effective (see **DATES**). The establishment of fees necessary to provide, equip, and maintain an adequate certification service for colors has been mandated by Congress under section 721(e) of the act. As certification services are provided to industry directly by FDA, the setting of a fee schedule to pay for these services is a matter particularly within the purview and expertise of the agency. The fees established by this regulation have been based on cost accounting methods using data compiled by the agency. Increasing the fees by $0.05 per pound will ensure the viability of the certification program and offset the increased costs of maintaining this program. The fee for straight colors including lakes will be $0.35 per pound (a $0.05 per pound increase) with a minimum fee of $224. There are similar increases in fees for repacks of certified

color additives and color additive mixtures.

### III. Analysis of Impacts

FDA has examined the impacts of the interim final rule under Executive Order 12866 and the Regulatory Flexibility Act (5 U.S.C. 601–612), and the Unfunded Mandate Reforms Flexibility Act (Public Law 104–4). Executive Order 12866 directs agencies to assess all costs and benefits of available regulatory alternatives and, when regulation is necessary, to select regulatory approaches that maximize net benefits (including potential economic, environmental, public health and safety, and other advantages; distributive impacts; and equity). The agency believes that this interim final rule is consistent with the regulatory philosophy and principles identified in the Executive order. In addition, the interim final rule is not a significant regulatory action as defined by the Executive order and so is not subject to review under the Executive order.

The Regulatory Flexibility Act requires agencies to analyze regulatory options that would minimize any significant impact of a rule on small entities. The entire cost of this fee increase would be approximately $849,626 per year and would be distributed amongst approximately 23 companies who would pay an increased fee that is proportional to the number of pounds of color that they certify. The great majority of these costs will be borne by a few firms that have a dominate share of the color certification market. These firms that have the largest shares of the market would pay most of these fees. In addition, by the Small Business Administration (SBA) standards, all of the affected manufacturers of color additives are considered large. Thus, the agency certifies that the interim final rule will not have a significant economic impact on a substantial number of small entities. Therefore, under the Regulatory Flexibility Act, no further analysis is required.

Section 202(a) of the Unfunded Mandates Reform Act of 1995 requires that agencies prepare a written statement, which includes an assessment of anticipated costs and benefits, before proposing ''any rule that includes any Federal mandate that may result in the expenditure by State, local, and tribal governments, in the aggregate, or by the private sector, of $100,000,000 or more (adjusted annually for inflation) in any one year.'' The current threshold after adjustment for inflation is $115 million, using the most current (2003) Implicit Price Deflator for the Gross Domestic Product. FDA does not expect this final rule to result in any 1-year expenditure that would meet or exceed this amount.

### IV. Environmental Impact

The agency has determined under 21 CFR 25.22(a) that this action is of a type that does not individually or cumulatively have a significant effect on the human environment. Therefore, neither an environmental assessment nor an environmental impact statement is required.

### V. Opportunity for Public Comment

Under 5 U.S.C. 553(b)(B) and 21 CFR 10.40(e), FDA finds that providing for notice and public comment before the establishment of these fees, and for revising the basis on which these fees are calculated, is contrary to the public interest. It is necessary to implement the fee increase as soon as possible to preserve adequate funds for the program. A delay could result in the fund being exhausted before the end of the fiscal year. The agency believes, however, that it is appropriate to invite and consider public comments on these requirements.

Interested persons may submit to the Division of Dockets Management (see **ADDRESSES**) written or electronic comments regarding this document. Submit a single copy of electronic copies or two paper copies of any mailed comments, except that individuals may submit one paper copy. Comments are to be identified with the docket number found in brackets in the heading of this document. Received comments may be seen in the Division of Dockets Management between 9 a.m. and 4 p.m., Monday through Friday.

### List of Subjects in 21 CFR Part 80

Color additives, Cosmetics, Drugs, Reporting and recordkeeping requirements.

■ Therefore, under the Federal Food, Drug, and Cosmetic Act and under authority delegated to the Commissioner of Food and Drugs, 21 CFR part 80 is amended as follows:

## PART 80—COLOR ADDITIVE CERTIFICATION

■ 1. The authority citation for 21 CFR part 80 continues to read as follows:

**Authority:** 21 U.S.C. 371, 379e.

■ 2. Section 80.10 is amended by revising paragraphs (a) and (b) to read as follows:

**§ 80.10 Fees for certification services.**

(a) *Fees for straight colors including lakes*. The fee for the services provided by the regulations in this part in the case of each request for certification submitted in accordance with § 80.21(j)(1) and (j)(2) shall be $0.35 per pound of the batch covered by such requests, but no such fee shall be less than $224.

(b) *Fees for repacks of certified color additives and color additive mixtures*. The fees for the services provided under the regulations in this part in the case of each request for certification submitted in accordance with § 80.21(j)(3) and (j)(4) shall be:

(1) 100 pounds or less—$35.

(2) Over 100 pounds but not over 1,000 pounds—$35 plus $0.05 for each pound over 100 pounds.

(3) Over 1,000 pounds—$89 plus $0.02 for each pound over 1,000 pounds.

* * * * *

Dated: March 21, 2005.

**Jeffrey Shuren,**

*Assistant Commissioner for Policy.*

[FR Doc. 05–6155 Filed 3–28–05; 8:45 am]

BILLING CODE 4160–01–S

---

## DEPARTMENT OF HEALTH AND HUMAN SERVICES

### Food and Drug Administration

### 21 CFR Part 172

**[Docket No. 2003F–0471]**

## Food Additives Permitted for Direct Addition to Food for Human Consumption; Glycerol Ester of Gum Rosin

**AGENCY:** Food and Drug Administration, HHS.

**ACTION:** Final rule.

**SUMMARY:** The Food and Drug Administration (FDA) is amending the food additive regulations to provide for the safe use of glycerol ester of gum rosin (GEGR) to adjust the density of citrus oils used in the preparation of beverages. This action is in response to a petition filed by T&R Chemicals, Inc.

**DATES:** This rule is effective March 29, 2005. Submit written or electronic objections and requests for a hearing by April 28, 2005.

**ADDRESSES:** You may submit written or electronic objections and requests for a hearing, identified by Docket No. 2003F–0471, by any of the following methods:

- Federal eRulemaking Portal: *http://www.regulations.gov*. Follow the instructions for submitting comments.
- Agency Web site: *http://www.fda.gov/dockets/ecomments*.

Follow the instructions for submitting comments on the agency Web site.

• E-mail: *fdadockets@oc.fda.gov*. Include Docket No. 2003F–0471 in the subject line of your e-mail message.

• FAX: 301–827–6870.

• Mail/Hand delivery/Courier (For paper, disk, or CD–ROM submissions): Division of Dockets Management (HFA–305), Food and Drug Administration, 5630 Fishers Lane, rm. 1061, Rockville, MD 20852.

*Instructions*: All submissions received must include the agency name and docket number for this rulemaking. All objections received will be posted without change to *http://www.fda.gov/ohrms/dockets/default.htm*, including any personal information provided. For detailed instructions on submitting objections see the ''Objections'' heading of the **SUPPLEMENTARY INFORMATION** section of this document.

*Docket*: For access to the docket to read background documents or comments received, go to *http://www.fda.gov/ohrms/dockets/default.htm* and insert the docket number, found in brackets in the heading of this document, into the ''Search'' box and follow the prompts and/or go to the Division of Dockets Management, 5630 Fishers Lane, rm. 1061, Rockville, MD 20852.

**FOR FURTHER INFORMATION CONTACT:** Andrew J. Zajac, Center for Food Safety and Applied Nutrition (HFS–265), Food and Drug Administration, 5100 Paint Branch Pkwy., College Park, MD 20740–3835, 301–436–1267.

**SUPPLEMENTARY INFORMATION:**

## I. Background

In a notice published in the **Federal Register** of October 17, 2003 (68 FR 59794), FDA announced that a food additive petition (FAP 3A4749) had been filed by T&R Chemicals, Inc., c/o The Environ Health Sciences Institute, 4350 North Fairfax Dr., suite 300, Arlington, VA 22203. The petition proposed to amend the food additive regulations in part 172 (21 CFR part 172) to provide for the safe use of GEGR to adjust the density of citrus oils used in the preparation of beverages.

The proposed additive is intended to substitute for glycerol ester of wood rosin (GEWR). GEWR is currently permitted under § 172.735 for use in adjusting the density of citrus oils used in the preparation of beverages at a level not to exceed 100 parts per million (ppm) of the finished beverage. GEGR would be used at the same level as GEWR. In evaluating this petition, the agency reviewed data and information concerning: (1) The chemical composition of GEGR in comparison with that of GEWR, (2) the process used to manufacture GEGR, (3) physicochemical properties of GEGR compared to those of GEWR, (4) conformance of GEGR with the specifications in § 172.735 for GEWR, (5) the functional equivalence of GEGR to GEWR, and (6) relevant safety information.

Based on its evaluation, the agency has determined that GEGR is chemically similar to GEWR, such that any increase in the estimated daily intake (EDI) of the individual resin acids and resin acid esters that are the major components of both GEGR and GEWR from the petitioned use of GEGR would be insignificant and of no toxicological concern. The agency concludes that the petitioned use of GEGR as a substitute for GEWR to adjust the density of citrus oils used in the preparation of beverages at a level not to exceed 100 ppm of the finished beverage is safe, the additive will achieve its intended technical effect, and therefore, § 172.735 should be amended as set forth below.

In accordance with § 171.1(h) (21 CFR 171.1(h)), the petition and the documents that FDA considered and relied upon in reaching its decision to approve the petition are available for inspection at the Center for Food Safety and Applied Nutrition by appointment (see **FOR FURTHER INFORMATION CONTACT**). As provided in § 171.1(h), the agency will delete from the documents any materials that are not available for public disclosure before making the documents available for inspection.

## II. Response to Comments

During the course of FDA's evaluation of FAP 3A4749, the agency received one comment on the petition. This comment objects to the petitioner's claim that GEGR and GEWR are chemically equivalent. The comment points to purported differences in raw material sourcing and processing, compositional differences and variation in gum rosin, and differences occurring during the esterification process due to variations in the resin acid content. The comment also challenges the analytical methodology (i.e., saponification followed by gas chromatographic analysis) used by the petitioner in comparing GEGR and GEWR. The comment further objects to the petitioner's reliance on safety data which support the use of GEWR as the basis for establishing the safety of GEGR, on the grounds that such use of unpublished information furnished previously to FDA by another person was not authorized as required by § 171.1(b).

While FDA agrees that there are differences in raw material sourcing and processing for GEGR and GEWR, FDA has concluded that the compositions of these two substances are so similar that any differences are not of toxicological concern for the petitioned use. FDA also agrees there will be variability in the composition of the rosins depending on the source and even from the same source due to differences in climate and soil conditions (Ref. 1). However, this natural variability does not result in a qualitatively different composition of the rosin but rather a typical range of values for the individual components of the rosin. Because of source variability and different climates and soils, the composition of GEGR will vary from batch to batch, although its general composition will fall within a typical range. The composition of GEWR will vary in an analogous manner. Furthermore, this variability in the rosin composition does not result in a significant difference in the EDI for the individual resin acid components of GEGR and GEWR for the conditions of use. In addition, GEWR is characterized by its physical properties, which are specified in § 172.735. GEGR will have to conform to these same specifications.

As stated previously in this document, the comment also challenges the analytical methodology (i.e., saponification followed by gas chromatographic analysis) used by the petitioner in comparing GEGR and GEWR. The comment claims that this technique is inappropriate because it can induce isomerization of the resin acids, thereby changing the composition compared to the starting rosin. No literature references or data were provided to support this statement. In addition, the procedure used by the petitioner included a step to decrease the amount of isomerization. The petitioner also used other appropriate analytical techniques (e.g., infrared spectroscopy and nuclear magnetic resonance spectroscopy) to compare GEGR and GEWR. Therefore, the agency concludes that data from these techniques, as well as the data from the gas chromatographic analyses, adequately demonstrate that GEGR and GEWR are chemically similar.

Because the agency has determined that GEGR and GEWR are similar with respect to the identity of their chemical components and that any difference in the ranges for the components of GEGR and GEWR are not significantly different and would be of no toxicological concern, there is no need for toxicological testing of GEGR to demonstrate that the petitioned use is safe.

### III. Environmental Impact

The agency has previously considered the environmental effects of this rule as announced in the notice of filing for FAP 3A4749 (68 FR 59794). No new information or comments have been received that would affect the agency's previous determination that there is no significant impact on the human environment and that an environmental impact statement is not required.

### IV. Paperwork Reduction Act of 1995

This final rule contains no collection of information. Therefore, clearance by the Office of Management and Budget under the Paperwork Reduction Act of 1995 is not required.

### V. Objections

Any person who will be adversely affected by this regulation may file with the Division of Dockets Management (see **ADDRESSES**) written or electronic objections (see **DATES**). Each objection shall be separately numbered, and each numbered objection shall specify with particularity the provisions of the regulation to which objection is made and the grounds for the objection. Each numbered objection on which a hearing is requested shall specifically so state. Failure to request a hearing for any particular objection shall constitute a waiver of the right to a hearing on that objection. Each numbered objection for which a hearing is requested shall include a detailed description and analysis of the specific factual information intended to be presented in support of the objection in the event that a hearing is held. Failure to include such a description and analysis for any particular objection shall constitute a waiver of the right to a hearing on the objection. Three copies of all documents are to be submitted and are to be identified with the docket number found in brackets in the heading of this document. Any objections received in response to the regulation may be seen in the Division of Dockets Management between 9 a.m. and 4 p.m., Monday through Friday.

### VI. Reference

The following reference has been placed on display in the Division of Dockets Management (see **ADDRESSES**) and may be seen by interested persons between 9 a.m. and 4 p.m., Monday through Friday.

1. Memorandum from D. Doell, FDA, Division of Petition Review, Chemistry Review Group, and David Carlson, FDA, Division of Petition Review, Toxicology Review Group I, to A. Zajac, FDA Division of Petition Review, Regulatory Review Group I, February 17, 2005.

### List of Subjects in 21 CFR Part 172

Food additives, Reporting and recordkeeping requirements.

■ Therefore, under the Federal Food, Drug, and Cosmetic Act and under authority delegated to the Commissioner of Food and Drugs, and redelegated to the Director, Center for Food Safety and Applied Nutrition, 21 CFR part 172 is amended as follows:

## PART 172—FOOD ADDITIVES PERMITTED FOR DIRECT ADDITION TO FOOD FOR HUMAN CONSUMPTION

■ 1. The authority citation for 21 CFR part 172 continues to read as follows:

**Authority:** 21 U.S.C. 321, 341, 342, 348, 371, 379e.

■ 2. Section 172.735 is amended by revising the section heading and the introductory text to read as follows:

**§ 172.735 Glycerol ester of wood or gum rosin.**

Glycerol ester of wood or gum rosin may be safely used in food in accordance with the following prescribed conditions:

* * * * *

Dated: March 18, 2005.

**Leslye M. Fraser,**

*Director, Officer of Regulations and Policy, Center for Food Safety and Applied Nutrition.*

[FR Doc. 05–6089 Filed 3–28–05; 8:45 am]

BILLING CODE 4160–01–S

---

## DEPARTMENT OF HEALTH AND HUMAN SERVICES

## Food and Drug Administration

## 21 CFR Part 556

## Tolerances for Residues of New Animal Drugs in Food; Zeranol

**AGENCY:** Food and Drug Administration, HHS.

**ACTION:** Final rule.

**SUMMARY:** The Food and Drug Administration (FDA) is amending the animal drug regulations to reflect approval of a supplemental new animal drug application (NADA) filed by Schering-Plough Animal Health Corp. The supplemental NADA provides for the establishment of a tolerance for residues of zeranol in edible tissues of sheep. Accordingly, the analytical method for detecting residues of zeranol in uncooked edible tissues of sheep is being removed from the animal drug regulations.

**DATES:** This rule is effective March 29, 2005.

**FOR FURTHER INFORMATION CONTACT:** Eric S. Dubbin, Center for Veterinary Medicine (HFV–126), Food and Drug Administration, 7500 Standish Pl., Rockville, MD 20855, 301–827–0232, e-mail: *edubbin@cvm.fda.gov*.

**SUPPLEMENTARY INFORMATION:** Schering-Plough Animal Health Corp., 1095 Morris Ave., Union, NJ 07083, filed a supplement to NADA 38–233 for RALGRO (zeranol), a subcutaneous implant used in cattle and in sheep for improved feed efficiency and/or increased rate of weight gain. The supplemental NADA provides for the establishment of a tolerance for residues of zeranol in edible tissues of sheep. Accordingly, the analytical method for detecting residues of zeranol in uncooked edible tissues of sheep is being removed from part 556 (21 CFR part 556). The supplemental application is approved as of March 4, 2005, and the regulations are amended in § 556.760 to reflect the approval.

In accordance with the freedom of information provisions of 21 CFR part 20 and 21 CFR 514.11(e)(2)(ii), a summary of safety and effectiveness data and information submitted to support approval of this application may be seen in the Division of Dockets Management (HFA–305), Food and Drug Administration, 5630 Fishers Lane, rm. 1061, Rockville, MD 20852, between 9 a.m. and 4 p.m., Monday through Friday.

The agency has determined under 21 CFR 25.33(a)(1) that this action is of a type that does not individually or cumulatively have a significant effect on the human environment. Therefore, neither an environmental assessment nor an environmental impact statement is required.

This rule does not meet the definition of ''rule'' in 5 U.S.C. 804(3)(A) because it is a rule of ''particular applicability.'' Therefore, it is not subject to the congressional review requirements in 5 U.S.C. 801–808.

### List of Subjects in 21 CFR Part 556

Animal drugs, Foods.

■ Therefore, under the Federal Food, Drug, and Cosmetic Act and under authority delegated to the Commissioner of Food and Drugs and redelegated to the Center for Veterinary Medicine, 21 CFR part 556 is amended as follows:

## PART 556—TOLERANCES FOR RESIDUES OF NEW ANIMAL DRUGS IN FOOD

■ 1. The authority citation for 21 CFR part 556 continues to read as follows:

**Authority:** 21 U.S.C. 342, 360b, 371.

■ 2. Section 556.760 is amended by revising paragraph (b) and by adding paragraph (c) to read as follows:

**§ 556.760 Zeranol.**

* * * * *

(b) *Tolerances.* The tolerances for residues of zeranol in edible tissues are:

(1) *Cattle.* A tolerance is not needed.

(2) *Sheep.* 20 parts per billion.

(c) *Related conditions of use.* See § 522.2680 of this chapter.

Dated: March 21, 2005.

**Steven D. Vaughn,**

*Director, Office of New Animal Drug Evaluation, Center for Veterinary Medicine.*

[FR Doc. 05–6156 Filed 3–28–05; 8:45 am]

BILLING CODE 4160–01–S

## DEPARTMENT OF THE INTERIOR

## Bureau of Indian Affairs

## 25 CFR Part 11

**RIN 1076–AE52**

## Law and Order on Indian Reservations

**AGENCY:** Bureau of Indian Affairs, Interior.

**ACTION:** Final rule and request for comments.

**SUMMARY:** This document adds the Winnemucca Indian Tribe (Western Region, Nevada) to the listing of Courts of Indian Offenses. This amendment will establish a Court of Indian Offenses for a period not to exceed 2 years. It is necessary to establish a Court of Indian Offenses with jurisdiction over the Winnemucca Indian Tribe of the Winnemucca Reservation and Colony in order to protect lives and property.

**DATES:** This rule is effective on March 29, 2005. Comments must be received on or before May 31, 2005. Section 11.100(a)(15) expires March 29, 2007.

**ADDRESSES:** You may submit comments, identified by the number 1076–AE52, by any of the following methods:

- Federal rulemaking portal: *http://www.regulations.gov* Follow the instructions for submitting comments.
- Fax: (202) 208–5113.
- Mail: Ralph Gonzales, Office of Tribal Services, Bureau of Indian Affairs, 1951 Constitution Avenue, NW., MS 320–SIB, Washington, DC 20240.
- Hand delivery: Office of Tribal Services, Bureau of Indian Affairs, 1951 Constitution Avenue, NW., MS 320–SIB, Washington, DC 20240.

**FOR FURTHER INFORMATION CONTACT:** Sharlot Johnson, Tribal Operations Officer, Western Regional Office, Bureau of Indian Affairs, 400 N. Fifth Street, Phoenix, Arizona 85004, (602) 379–6786; or Ralph Gonzales, Office of Tribal Services, Bureau of Indian Affairs, 1951 Constitution Avenue, NW., MS 320–SIB, Washington, DC 20240, (202) 513–7629.

**SUPPLEMENTARY INFORMATION:** The authority to issue this rule is vested in the Secretary of the Interior by 5 U.S.C. 301 and 25 U.S.C. 2 and 9; and 25 U.S.C. 13, which authorizes appropriations for ''Indian judges.'' See *Tillett* v. *Hodel,* 730 F. Supp., 381 (W.D. Okla. 1990), *aff'd* 931 F.2d 636 (10th Cir. 1991), *United States* v. *Clapox,* 13 Sawy. 349, 35 F. 575 (D. Ore. 1888). This rule is published in the exercise of the rulemaking authority delegated by the Secretary of the Interior to the Assistant Secretary—Indian Affairs in the Departmental Manual at 209 DM 8.1.

The territorial jurisdiction is extended to the land described in this document. The tract of land located in Nevada, within which the Winnemucca Indian Tribe is located, and more particularly described as:

(1) That 160 acres set aside by Executive Order of June 18, 1917, described as the NE¼ of Section 32, Township 36 N., Range 38 E., M.D.M.;

(2) That 160 acres withdrawn by Executive Order of February 8, 1918, described as the SE¼ of Section 32, Township 36 N., Range 38 E., M.D.M.; and

(3) That 20 acres acquired by the Acts of May 21, 1928 (45 Stat. 618) and May 29, 1928 (45 Stat 899) and described as N½, NE¼, Section 29, Township 36 N., Range 38 E., M.D.M.

In addition, the territorial jurisdiction is extended to any lands hereafter acquired by or for the Colony. A provisional Court of Indian Offenses must be established for the Winnemucca Indian Tribe to protect the lives, persons, and property of people residing at and attending or visiting the Winnemucca Reservation and Colony, until they establish a tribal court in accordance with 25 CFR 11.100(c). This court shall function for a period not to exceed 2 years.

Judges of the Court of Indian Offenses shall be authorized to exercise all authority provided under 25 CFR part 11, including: Subpart D—Criminal Offenses; Subpart H—Appellate Proceedings; Subpart J—Juvenile Offender Procedure; issuance of arrest and search warrants pursuant to 25 CFR 11.302 and 11.305 and the Indian Law Enforcement Reform Act, 25 U.S.C. 2803(2) (1998). Officials of the Bureau of Indian Affairs have already set up a provisional Court of Indian Offenses pursuant to 25 CFR 11.100(a) for the Western Region to address this law enforcement need. This rule merely affirms the legitimacy of the establishment of this court.

This final rule will not authorize judges to exercise the following authority under 25 CFR part 11: Subpart E—Civil Actions; Subpart F—Domestic Relations; Subpart G—Probate Proceedings; Subpart I—Children's Court; and Subpart K—Minor-in-Need-of-Care Procedure.

### Determination To Publish a Direct Final Rule Effective Immediately

The Bureau of Indian Affairs has determined that the public notice and comment provisions of the Administrative Procedure Act, 5 U.S.C. 553(b), do not apply because of the good cause exception under 5 U.S.C. 553(b)(3)(B), which allows the agency to suspend the notice and public procedure when the agency finds for good cause that those requirements are impractical, unnecessary and contrary to the public interest. This amendment will establish a provisional Court of Indian Offenses for the Winnemucca Indian Tribe of Winnemucca, Nevada, on land that was placed in trust for the benefit of the Winnemucca Indian Tribe. If this provisional court is not established, there is a high potential risk to public safety and a further risk of significant financial liability to the Federal Government from a lawsuit for failure to execute diligently its trust responsibility and provide adequate law enforcement on trust land. Delaying this rule to solicit public comment through the proposed rulemaking process would thus be contrary to the public interest. The Bureau of Indian Affairs Law Enforcement Services provides Law Enforcement Services to the Winnemucca Indian Tribe and an increase in visitors to the Winnemucca Reservation and Colony is imminent. For these reasons, an immediate effective date is in the public interest and in the interest of the Winnemucca Tribe. Accordingly, this amendment is issued as a final rule effective immediately.

We invite comments on any aspect of this rule and we will revise the rule if comments warrant. Send comments on this rule to the address in the **ADDRESSES** section.

### Regulatory Planning and Review (Executive Order 12866)

In accordance with the criteria in Executive Order 12866, this rule is not a significant regulatory action. OMB makes the final determination under Executive Order 12866.

(a) This rule will not have an annual economic effect of $100 million or adversely affect an economic sector, productivity, jobs, the environment, or other units of government. A cost-benefit and economic analysis is not required. The establishment of this Court of Indian Offenses is estimated to cost less than $200,000 annually to operate. The cost associated with the operation of this court will be with the Bureau of Indian Affairs and the Winnemucca Tribe.

(b) This rule will not create inconsistencies with other agencies' actions. The Department of the Interior through the Bureau of Indian Affairs has the sole responsibility and authority to establish Courts of Indian Offenses on Indian reservations.

(c) This rule will not materially affect entitlements, grants, user fees, loan programs, or the rights and obligations of their recipients. The establishment of this Court of Indian Offenses will not affect any program rights of the Winnemucca Indian Tribe. Its primary function will be to administer justice for misdemeanor offenses within the Winnemucca Reservation and Colony grounds. The court's jurisdiction will be limited to criminal offense provided in 25 CFR part 11 and the Law and Order Code of the Winnemucca Tribe.

(d) This rule will not raise novel legal or policy issues. The Solicitor analyzed and upheld the Department of the Interior's authority to establish Courts of Indian Offenses in a memorandum dated February 28, 1935. The Solicitor found that authority to rest principally in the statutes placing supervision of the Indians in the Secretary of the Interior, 25 U.S.C. 2 and 9, and 25 U.S.C. 13, which authorizes appropriations for ''Indian judges.'' The United States Supreme Court recognized the authority of the Secretary to promulgate regulations with respect to Courts of Indian Offenses in *United States* v. *Clapox,* 35 F. 575 (D. Ore. 1888).

**Regulatory Flexibility Act**

The Bureau of Indian Affairs certifies that this rule will not have a significant economic effect on a substantial number of small entities as defined under the Regulatory Flexibility Act (5 U.S.C. 601 *et seq.*). An initial Regulatory Flexibility Analysis is not required.

Accordingly, a Small Entity Compliance Guide is not required. The amendment to 25 CFR part 11.100(a) will establish a Court of Indian Offenses with limited criminal jurisdiction over Indians within a limited geographical area at Winnemucca, Nevada.

Accordingly, there will be no impact on any small entities.

**Small Business Regulatory Enforcement Fairness Act**

This rule is not a major rule under 5 U.S.C. 804(2), the Small Business Regulatory Enforcement Fairness Act. This rule:

(a) Does not have an annual effect on the economy of $100 million or more. The establishment of this Court of Indian Offenses is estimated to cost less than $200,000 annually to operate. The cost associated with the operation of this court will be with the Bureau of Indian Affairs and the Winnemucca Tribe.

(b) Will not cause a major increase in costs or prices for consumers, individual industries, Federal, State, or local government agencies, or geographic regions. This is a court established specifically for the administration of misdemeanor justice for Indians located within the boundaries of the Winnemucca Indian Reservation and Colony and will not have any cost or price impact on any other entities in the geographical region.

(c) Does not have significant adverse effects on competition, employment, investment, productivity, innovation, or the ability of U.S. based enterprises to compete with foreign-based enterprises. This is a court established specifically for the administration of misdemeanor justice for Indians located within the boundaries of the Winnemucca Indian Reservation and Colony, Winnemucca, Nevada, and will not have an adverse impact on competition, investment, productivity, innovation, or the ability of U.S.-based enterprises to compete with foreign-based enterprises.

**Unfunded Mandates Reform Act**

In accordance with the Unfunded Mandates Reform Act (2 U.S.C. 1501 *et seq.*):

(a) This rule will not ''significantly or uniquely'' affect small governments. A Small Government Agency Plan is not required. The establishment of this Court of Indian Offenses will not have jurisdiction to affect any rights of the small governments. Its primary function will be to administer justice for misdemeanor offenses within the Winnemucca Indian Reservation and Colony grounds. Its jurisdiction will be limited to criminal offense provided in 25 CFR part 11 and the Law and Order Code of the Winnemucca Tribe.

(b) This rule will not produce a Federal mandate of $100 million or greater in any year; *i.e.*, it is not a ''significant regulatory action'' under the Unfunded Mandates Reform Act.

**Takings Implication Assessment (Executive Order 12630)**

In accordance with Executive Order 12630, the rule does not have significant takings implications. A takings implication assessment is not required. The amendment to 25 CFR 11.100(a) will establish a Court of Indian Offenses with limited criminal jurisdiction over Indians within a limited geographical area at Winnemucca, Nevada. Accordingly, there will be no jurisdictional basis to adversely affect any property interest because the court's jurisdiction is solely personal jurisdiction over Indians.

**Federalism (Executive Order 13132)**

In accordance with Executive Order 13132, the rule does not have significant federalism effects. A federalism assessment is not required. The Solicitor found that authority to rest principally in the statutes placing supervision of the Indians in the Secretary of the Interior, 25 U.S.C. 2 and 9; and 25 U.S.C. 13, which authorizes appropriations for ''Indian judges.'' The United States Supreme Court recognized the authority of the Secretary to promulgate regulations with respect to Courts of Indian Offenses in *United States* v. *Clapox,* 35 F. 575 (D. Ore. 1888).

**Civil Justice Reform (Executive Order 12988)**

In accordance with Executive Order 12988, the Office of the Solicitor has determined that the rule does not unduly burden the judicial system and meets the requirements of sections 3(a) and 3(b)(2) of the Order. The Solicitor analyzed and upheld the Department of the Interior's authority to establish Courts of Indian Offenses in a memorandum dated February 28, 1935. The Solicitor found that authority to rest principally in the statutes placing supervision of the Indians in the Secretary of the Interior, 25 U.S.C. 2 and 9; and 25 U.S.C. 13, which authorizes appropriations for ''Indian judges.'' The United States Supreme Court recognized the authority of the Secretary to promulgate regulations with respect to Courts of Indian Offenses in *United States* v. *Clapox,* 35 F. 575 (D. Ore. 1888). Part 11 also requires the establishment of an appeals court; hence, the judicial system defined in Executive Order 12988 will not normally be involved in this judicial process.

**Paperwork Reduction Act**

This regulation does not require an information collection under the Paperwork Reduction Act. The information collection is not covered by

an existing OMB approval. An OMB form 83–I have not been prepared and have not been approved by the Office of Policy Analysis. No information is being collected as a result of this court exercising its limited criminal misdemeanor jurisdiction over Indians within the exterior boundaries of the Winnemucca Indian Reservation and Colony.

**National Environmental Policy Act**

We have analyzed this rule in accordance with the criteria of the National Environmental Policy Act and 516 DM. This rule does not constitute a major Federal action significantly affecting the quality of the human environment. An environmental impact statement/assessment is not required. The establishment of this Court of Indian Offenses conveys personal jurisdiction over the criminal misdemeanor actions of Indians within the exterior boundaries of the Winnemucca Indian Reservation and Colony and does not have any impact of the environment.

**Consultation and Coordination With Indian Tribal Governments (Executive Order 13175)**

In accordance with the President's memorandum of April 29, 1994, ''Government-to-Government Relations with Native American Tribal Governments'' (59 FR 22951), Executive Order 13175, and 512 DM 2, we have evaluated potential effects on federally recognized Indian tribes and have determined that there are no potential effects. The amendment to 25 CFR part 11.100(a) does not apply to any of the 564 federally recognized tribes, except the Winnemucca Indian Tribe. The provisional Court of Indian Offenses will exist until the tribe establishes a tribal court to provide for a law and order and a judicial system to deal with law and order on the trust land at the Winnemucca Indian Reservation and Colony, but is expected not to exceed 2 years. The Department of the Interior, in establishing this provisional court, is fulfilling its trust responsibility and complying with the unique government-to-government relationship that exists between the Federal Government and Indian tribes.

**List of Subjects in 25 CFR Part 11**

Courts, Indians—law, Law enforcement, Penalties.

■ For the reasons set out in the preamble, part 11 of title 25 of the Code of the Federal Regulations is amended as set forth below.

## PART 11—LAW AND ORDER ON INDIAN RESERVATIONS

■ 1. The authority citation for part 11 continues to read as follows:

**Authority:** R.S. 463; 25 U.S.C. 2, 38 Stat. 586; 25 U.S.C. 200, unless otherwise noted.

■ 2. Section 11.100 is amended by adding new paragraph (a)(15) to read as follows:

**§ 11.100 Listing of Courts of Indian Offenses.**

(a) * * *

(15) Winnemucca Indian Tribe (land in trust for the Winnemucca Indian Tribe of Nevada).

* * * * *

Dated: November 23, 2004.

**David W. Anderson,**

*Assistant Secretary—Indian Affairs.*

[FR Doc. 05–6113 Filed 3–28–05; 8:45 am]

BILLING CODE 4310–4J–P

---

## DEPARTMENT OF THE TREASURY

## Office of Foreign Assets Control

## 31 CFR Parts 535, 550, and 575

## Administrative Collection of Civil Penalties in the Iranian Assets Control Regulations, the Libyan Sanctions Regulations, and the Iraqi Sanctions Regulations

**AGENCY:** Office of Foreign Assets Control, Treasury.

**ACTION:** Final rule.

**SUMMARY:** The Office of Foreign Assets Control (''OFAC'') of the U.S. Department of the Treasury is revising the Iranian Assets Control Regulations, 31 CFR part 535, the Libyan Sanctions Regulations, 31 CFR part 550, and the Iraqi Sanctions Regulations, 31 CFR part 575, to reaffirm that administrative collection of unpaid civil penalties imposed by OFAC is authorized in addition to judicial means of collection.

**DATES:** This rule is effective March 29, 2005.

**FOR FURTHER INFORMATION CONTACT:** Chief of Policy Planning and Program Management, tel. (202) 622–2500, Chief of Civil Penalties, tel.: (202) 622–6140, or Chief Counsel, tel.: (202) 622–2410, Office of Foreign Assets Control, Department of the Treasury, Washington, DC 20220 (not toll free numbers).

**SUPPLEMENTARY INFORMATION:**

### Background

By law (31 U.S.C. 3711(a)), heads of Federal agencies are required to attempt to collect debts owed to those agencies. Among other things, Federal agencies may seek collection using one or more administrative means, such as contracting with private collection agencies. 31 U.S.C. 3718. The Department of the Treasury aggressively attempts to collect debts owed it by using multiple collection methods, including administrative collection. 31 CFR 5.2(e), 5.4, 5.9(c), and 5.15. An unpaid civil penalty is a debt under Treasury regulations. 31 CFR 5.1.

OFAC is revising pertinent sections of the Iranian Assets Control Regulations, 31 CFR part 535, the Libyan Sanctions Regulations, 31 CFR part 550, and the Iraqi Sanctions Regulations, 31 CFR part 575, to reaffirm that administrative collection of civil penalties is authorized in addition to or in lieu of judicial means of collection.

### Procedural Matters

Because the Iranian Assets Control Regulations, the Libyan Sanctions Regulations, and the Iraqi Sanctions Regulations involve a foreign affairs function of the United States, and because this rule imposes no new substantive duties or obligations on the public but rather clarifies OFAC's options regarding existing legal authorities and requirements related to the administrative collection of debts owed to the Government, the provisions in the Administrative Procedure Act (5 U.S.C. 553) requiring notice and public procedure and a delayed effective date are inapplicable. Because no notice of proposed rulemaking is required, the provisions of the Regulatory Flexibility Act (5 U.S.C. Chapter 6) do not apply.

### Electronic and Facsimile Availability

This file is available for download without charge in ASCII and Adobe Acrobat readable (*.PDF) formats at GPO Access. GPO Access supports HTTP, FTP, and Telnet at *fedbbs.access.gpo.gov.* It may also be accessed by modem dialup at (202) 512–1387 followed by typing ''/GO/FAC.'' Paper copies of this document can be obtained by calling the Government Printing Office at (202) 512–1530. This document and additional information concerning the programs of the Office of Foreign Assets Control are available for downloading from the Office's Internet Home Page: *http://www.treas.gov/ofac,* or via FTP at *ofacftp.treas.gov.* Facsimiles of information are available through the Office's 24-hour fax-on-demand service: call (202) 622–0077 using a fax machine, fax modem, or (within the United States) a touch-tone telephone.

**List of Subjects**

*31 CFR Part 535*

Administrative practice and procedure, Iran, Penalties, Sanctions.

*31 CFR Part 550*

Administrative practice and procedure, Libya, Penalties, Sanctions.

*31 CFR Part 575*

Administrative practice and procedure, Iraq, Penalties, Sanctions.

■ For the reasons set forth in the preamble, 31 CFR chapter V is amended as follows:

## PART 535—IRANIAN ASSETS CONTROL REGULATIONS

■ 1. The authority citation for part 535 continues to read as follows:

**Authority:** 18 U.S.C. 2332d; 31 U.S.C. 321(b); 50 U.S.C. 1701–1706; Pub. L. 101–410, 104 Stat. 890 (28 U.S.C. 2461 note); E.O. 12170, 44 FR 65729, 3 CFR, 1979 Comp., p. 457; E.O. 12205, 45 FR 24099, 3 CFR, 1980 Comp., p. 248; E.O. 12211, 45 FR 26685, 3 CFR, 1980 Comp., p. 253; E.O. 12276, 46 FR 7913, 3 CFR, 1981 Comp., p. 104; E.O. 12279, 46 FR 7919, 3 CFR, 1981 Comp., p. 109; E.O. 12280, 46 FR 7921, 3 CFR, 1981 Comp., p. 110; E.O. 12281, 46 FR 7923, 3 CFR, 1981 Comp., p. 110; E.O. 12282, 46 FR 7925, 3 CFR, 1981 Comp., p. 113; E.O. 12283, 46 FR 7927, 3 CFR, 1981 Comp., p. 114; and E.O. 12294, 46 FR 14111, 3 CFR, 1981 Comp., p. 139.

### Subpart G—Penalties

■ 2. Section 535.705 is revised to read as follows:

**§ 535.705 Administrative collection; referral to United States Department of Justice.**

In the event that the person named does not pay the penalty imposed pursuant to this part or make payment arrangements acceptable to the Director of the Office of Foreign Assets Control within 30 days of the date of mailing of the penalty notice, the matter may be referred for administrative collection measures by the Department of the Treasury or to the United States Department of Justice for appropriate action to recover the penalty in a civil suit in a Federal district court.

## PART 550—LIBYAN SANCTIONS REGULATIONS

■ 3. The authority citation for part 550 is revised to read as follows:

**Authority:** 3 U.S.C. 301; 18 U.S.C. 2339B, 2332d; 22 U.S.C. 287c, 2349aa–8 and 2349aa–9; 31 U.S.C. 321(b); 49 U.S.C. 40106(b); 50 U.S.C. 1601–1651, 1701–1706; Pub. L. 101–410, 104 Stat. 890 (28 U.S.C. 2461 note); Pub. L. 106–387, 114 Stat. 1549; E.O. 12543, 51 FR 875; 3 CFR, 1986 Comp., p. 181; E.O. 12544, 51 FR 1235, 3 CFR, 1986 Comp., p. 183; E.O. 12801, 57 FR 14319 3 CFR, 1992 Comp., p. 294; E.O. 13357, 69 FR 56665, September 20, 2004.

### Subpart G—Penalties

■ 4. Section 550.706 is revised to read as follows:

**§ 550.706 Administrative collection; referral to United States Department of Justice.**

In the event that the person named does not pay the penalty imposed pursuant to this part or make payment arrangements acceptable to the Director of the Office of Foreign Assets Control within 30 days of the date of mailing of the penalty notice, the matter may be referred for administrative collection measures by the Department of the Treasury or to the United States Department of Justice for appropriate action to recover the penalty in a civil suit in a Federal district court.

## PART 575—IRAQI SANCTIONS REGULATIONS

■ 5. The authority citation for part 575 continues to read as follows:

**Authority:** 3 U.S.C. 301; 22 U.S.C. 287(c); 18 U.S.C. 2332d; 22 U.S.C. 287c; Pub. L. 101–410, 104 Stat. 890 (28 U.S.C. 2461 note); 31 U.S.C. 321(b); 49 U.S.C. 40106; 50 U.S.C. 1601–1651, 1701–1706; Pub. L. 101–513, 104 Stat. 2047–2055 (50 U.S.C. 17012 note); E.O. 12722, 55 FR 31803, 3 CFR, 1990 Comp., p. 294; E.O. 12724, 55 FR 33089, 3 CFR, 1990 Comp., p. 297; E.O. 12817, 57 FR 484333, 3 CFR, 1992 Comp., p. 317; E.O. 13350, 69 FR 46055, July 29, 2004.

### Subpart G—Penalties

■ 6. Section 575.705 is revised to read as follows:

**§ 575.705 Administrative collection; referral to United States Department of Justice.**

In the event that the person named does not pay the penalty imposed pursuant to this part or make payment arrangements acceptable to the Director of the Office of Foreign Assets Control within 30 days of the date of mailing of the penalty notice, the matter may be referred for administrative collection measures by the Department of the Treasury or to the United States Department of Justice for appropriate action to recover the penalty in a civil suit in a Federal district court.

Dated: March 18, 2005.

**Robert W. Werner,**

*Director, Office of Foreign Assets Control.*

Approved: March 21, 2005.

**Juan C. Zarate,**

*Assistant Secretary of the Treasury for Terrorist Financing, Department of the Treasury.*

[FR Doc. 05–6092 Filed 3–24–05; 2:43 pm]

BILLING CODE 4810–25–P

---

## DEPARTMENT OF DEFENSE

### Office of the Secretary

### 32 CFR Part 189

**[DOD Directive 4700.3]**

### Mineral Exploration and Extraction on DOD Lands

**AGENCY:** Department of Defense.

**ACTION:** Final rule.

**SUMMARY:** This document removes information in Title 32 of the Code of Federal Regulations concerning Mineral Exploration and Extraction on DOD Lands. This part has served the purpose for which it was intended in the CFR and is no longer necessary.

**EFFECTIVE DATE:** March 29, 2005.

**FOR FURTHER INFORMATION CONTACT:** Jeannette Owings-Ballard (703) 601–4722*140.

**SUPPLEMENTARY INFORMATION:** The revised DOD Directive 4165.6 is available at *http://www.dtic.mil/whs/directives/corres/dir1.html.*

**List of Subjects in 32 CFR Part 189**

DOD controlled lands.

## PART 189—[REMOVED]

■ Accordingly, by the authority of 10 U.S.C. 301, 32 CFR part 189 is removed.

Dated: March 22, 2005.

**L.M. Bynum,**

*Alternate OSD Federal Register Liaison Officer, Department of Defense.*

[FR Doc. 05–6123 Filed 3–28–05; 8:45 am]

BILLING CODE 5001–06–P

## DEPARTMENT OF HOMELAND SECURITY

### Coast Guard

### 33 CFR Part 100

**[CGD05–05–017]**

**RIN 1625–AA08**

### Special Local Regulations for Marine Events; Severn River, College Creek, and Weems Creek, Annapolis, MD

**AGENCY:** Coast Guard, DHS.

**ACTION:** Notice of enforcement of regulation.

**SUMMARY:** The Coast Guard will be enforcing the special local regulations for the 26th Annual Safety at Sea Seminar, a marine event to be held April 2, 2005, on the waters of the Severn River at Annapolis, Maryland. These special local regulations are necessary to control vessel traffic due to the confined nature of the waterway and expected vessel congestion during the event. The effect will be to restrict general navigation in the regulated area for the safety of spectators and vessels transiting the event area.

**DATES:** The regulations at 33 CFR 100.518 will be enforced from 11:30 a.m. to 2 p.m. on April 2, 2005.

**FOR FURTHER INFORMATION CONTACT:** Ronald Houck, Marine Events Coordinator, Commander, Coast Guard Sector Baltimore, 2401 Hawkins Point Road, Baltimore, MD 21226–1971, and (410) 576–2674.

**SUPPLEMENTARY INFORMATION:** The U.S. Naval Academy Sailing Squadron will sponsor the 26th Annual Safety at Sea Seminar on the waters of the Severn River, near the entrance to College Creek at Annapolis, Maryland from 11:30 a.m. to 2 p.m. Waterborne activities will include exposure suit and life raft demonstrations, a pyrotechnics live-fire exercise, and a helicopter rescue. In order to ensure the safety of participants, spectators and transiting vessels, 33 CFR 100.518 will be enforced for the duration of the event. Under provisions of 33 CFR 100.518, vessels may not enter the regulated area without permission from the Coast Guard Patrol Commander. Spectator vessels may anchor outside the regulated area but may not block a navigable channel. Because these restrictions will be in effect for a limited period, they should not result in a significant disruption of maritime traffic.

In addition to this notice, the maritime community will be provided extensive advance notification via the Local Notice to Mariners, and marine information broadcasts so mariners can adjust their plans accordingly.

Dated: March 17, 2005.

**Ben R. Thomason, III,**

*Captain, U.S. Coast Guard, Commander, Fifth Coast Guard District, Acting.*

[FR Doc. 05–6147 Filed 3–28–05; 8:45 am]

BILLING CODE 4910–15–M

## DEPARTMENT OF HOMELAND SECURITY

### Coast Guard

### 33 CFR Part 117

**[CGD08–05–017]**

### Drawbridge Operating Regulations; Pascagoula River, Pascagoula, MS

**AGENCY:** Coast Guard, DHS.

**ACTION:** Notice of temporary deviation from regulations.

**SUMMARY:** The Commander, Eighth Coast Guard District, has issued a temporary deviation from the regulation governing the operation of the CSX Transportation Railroad Bridge across the Pascagoula River, mile 1.5, at Pascagoula, Jackson County, Mississippi. This deviation allows the draw of the bascule span bridge to remain closed to navigation for nine hours per day Monday through Thursday from April 11 until April 14, 2005. The deviation is necessary to repair the drive motor and associated hydraulic components of the draw span operating mechanism.

**DATES:** This deviation is effective from 8 a.m. on Monday, April 11, 2005, until 6 p.m. on Thursday, April 14, 2005.

**ADDRESSES:** Materials referred to in this document are available for inspection or copying at the office of the Eighth Coast Guard District, Bridge Administration Branch, Hale Boggs Federal Building, Room 1313, 500 Poydras Street, New Orleans, Louisiana, 70130–3310 between 7 a.m. and 3 p.m., Monday through Friday, except Federal holidays. The telephone number is (504) 589–2965. The Bridge Administration Branch maintains the public docket for this temporary deviation.

**FOR FURTHER INFORMATION CONTACT:** Phil Johnson, Bridge Administration Branch, telephone (504) 589–2965.

**SUPPLEMENTARY INFORMATION:** The CSX Transportation Company has requested a temporary deviation in order to repair the main drive motor and associated hydraulic components of the operating mechanism of the CSX Transportation Railroad Bascule Span Bridge across the Pascagoula River, mile 1.5, at Pascagoula, Jackson County, Mississippi. Recently, the main drive motor failed, and the draw span is currently being operated with the auxiliary motor. The repairs are necessary for continued operation of the draw span. This temporary deviation will allow bridge to remain in the closed-to-navigation position from 8 a.m. until noon and from 1 p.m. until 6 p.m. Monday through Thursday from April 11, 2005 until April 14, 2005. There may be times, during the closure periods, when the draw will not be able to open for emergencies.

As the bridge has no vertical clearance in the closed-to-navigation position, vessels will not be able to transit through the bridge site when the bridge is closed. Navigation on the waterway consists of small cargo ships, tugs with tows, fishing vessels and recreational craft including sailboats and power boats. Due to prior experience, as well as coordination with waterway users, it has been determined that this closure will not have a significant effect on these vessels.

In accordance with 33 CFR 117.35(c), this work will be performed with all due speed in order to return the bridge to normal operation as soon as possible. This deviation from the operating regulations is authorized under 33 CFR 117.35.

Dated: March 22, 2005.

**Marcus Redford,**

*Bridge Administrator.*

[FR Doc. 05–6148 Filed 3–28–05; 8:45 am]

BILLING CODE 4910–15–P

## DEPARTMENT OF HOMELAND SECURITY

### Coast Guard

### 33 CFR Part 117

**[CGD01–04–047]**

**RIN 1625–AA09**

### Drawbridge Operation Regulations: Long Island, New York Inland Waterway From East Rockaway Inlet to Shinnecock Canal, NY

**AGENCY:** Coast Guard, DHS.

**ACTION:** Final rule.

**SUMMARY:** The Coast Guard has changed the drawbridge operation regulations that govern the operation of the Long Beach Bridge, at mile 4.7, across Reynolds Channel New York. This final rule allows the Long Beach Bridge to remain closed from 10 p.m. to midnight on July 3 each year. This rule is

necessary to facilitate public safety during the annual fireworks display at Town Park on Lookout Point, New York.

**DATES:** This rule is effective April 28, 2005.

**ADDRESSES:** Comments and material received from the public, as well as documents indicated in this preamble as being available in the docket, are part of docket (CGD01–04–047) and are available for inspection or copying at the First Coast Guard District, Bridge Branch Office, 408 Atlantic Avenue, Boston, Massachusetts, 02110, between 7 a.m. and 3 p.m., Monday through Friday, except Federal holidays.

**FOR FURTHER INFORMATION CONTACT:** Mr. Gary Kassof, Bridge Administrator, First Coast Guard District, (212) 668–7165.

**SUPPLEMENTARY INFORMATION:**

## Regulatory Information

On December 15, 2004, we published a notice of proposed rulemaking (NPRM) entitled Drawbridge Operation Regulations; Long Island, New York Inland Waterway from East Rockaway Inlet to Shinnecock Canal, New York, in the **Federal Register** (69 FR 75011). We received no comments in response to the notice of proposed rulemaking. No public hearing was requested and none was held.

## Background and Purpose

The Long Beach Bridge has a vertical clearance of 20 feet at mean high water and 24 feet at mean low water. The existing regulations are listed at 33 CFR 117.799(g).

The Town of Hempstead, Department of Public Works requested that the Long Beach Bridge opening schedule be changed to allow the Long Beach Bridge to remain closed from 10 p.m. to midnight on July 3 each year to facilitate vehicular traffic and public safety during the annual Salute to Veterans and Fireworks Display at Town Park on Lookout Point, New York.

On June 2, 2004, we published a temporary deviation and request for comment entitled Drawbridge Operation Regulations; Long Island, New York Inland Waterway from East Rockaway Inlet to Shinnecock Canal, New York, in the **Federal Register** (69 FR 31005). We received no comments in response to our temporary deviation and request for comment.

## Discussion of Comments and Changes

The Coast Guard received no comments in response to the notice of proposed rulemaking and as a result, no changes have been made to this final rule.

## Regulatory Evaluation

This rule is not a ''significant regulatory action'' under section 3(f) of Executive Order 12866, Regulatory Planning and Review, and does not require an assessment of potential costs and benefits under section 6(a)(3), of that Order. The Office of Management and Budget has not reviewed it under that Order. It is not ''significant'' under the regulatory policies and procedures of the Department of Homeland Security (DHS).

This conclusion is based on the fact that the bridge closure is of short duration in the interest of public safety.

## Small Entities

Under the Regulatory Flexibility Act (5 U.S.C. 601–612), we considered whether this rule would have a significant economic impact on a substantial number of small entities. The term ''small entities'' comprises small businesses, not-for profit organizations that are independently owned and operated and are not dominant in their fields, and governmental jurisdictions with populations less than 50,000.

The Coast Guard certifies under 5 U.S.C. 605(b), that this rule will not have a significant economic impact on a substantial number of small entities.

This conclusion is based on the fact that the bridge closure is of short duration in the interest of public safety.

## Assistance for Small Entities

Under section 213(a) of the Small Business Regulatory Enforcement Fairness Act of 1996 (Pub. L. 104–121), we offered to assist small entities in understanding the rule so that they could better evaluate its effects on them and participate in the rulemaking process.

No small entities requested Coast Guard assistance and none was given.

Small businesses may send comments on the actions of Federal employees who enforce, or otherwise determine compliance with, Federal regulations to the Small Business and Agriculture Regulatory Enforcement Ombudsman and the Regional Small Business Regulatory Fairness Boards. The Ombudsman evaluates these actions annually and rates each agency's responsiveness to small business. If you wish to comment on actions by employees of the Coast Guard, call 1–888–REG–FAIR (1–888–734–3247).

## Collection of Information

This rule calls for no new collection of information under the Paperwork Reduction Act of 1995 (44 U.S.C. 3501–3520).

## Federalism

A rule has implications for federalism under Executive Order 13132, Federalism, if it has a substantial direct effect on State or local governments and would either preempt State law or impose a substantial direct cost of compliance on them. We have analyzed this rule under that Order and have determined that it does not have implications for federalism.

## Unfunded Mandates Reform Act

The Unfunded Mandates Reform Act of 1995 (2 U.S.C. 1531–1538) requires Federal agencies to assess the effects of their discretionary regulatory actions. In particular, the Act addresses actions that may result in the expenditure by State, local, or tribal government, in the aggregate, or by the private sector of $100,000,000 or more in any one year. Though this rule will not result in such an expenditure, we do discuss the effects of this rule elsewhere in this preamble.

## Taking of Private Property

This rule will not effect a taking of private property or otherwise have taking implications under Executive Order 12630, Governmental Actions and Interference with Constitutionally Protected Property Rights.

## Civil Justice Reform

This rule meets applicable standards in sections 3(a) and 3(b)(2) of Executive Order 12988, Civil Justice Reform, to minimize litigation, eliminate ambiguity, and reduce burden.

## Protection of Children

We have analyzed this rule under Executive Order 13045, Protection of Children from Environmental Health Risks and Safety Risks. This rule is not an economically significant rule and does not concern an environmental risk to health or risk to safety that may disproportionately affect children.

## Indian Tribal Governments

This final rule does not have tribal implications under Executive Order 13175, Consultation and Coordination with Indian Tribal Governments, because it does not have substantial direct effect on one or more Indian tribes, on the relationship between the Federal Government and Indian tribes, or on the distribution of power and responsibilities between the Federal Government and Indian tribes.

## Energy Effects

We have analyzed this rule under Executive Order 13211, Actions Concerning Regulations That

Significantly Affect Energy Supply, Distribution, or Use. We have determined that it is not a ''significant energy action'' under that order because it is not a ''significant regulatory action'' under Executive Order 12866 and is not likely to have a significant adverse effect on the supply, distribution, or use of energy. The Administrator of the Office of Information and Regulatory Affairs has not designated it as a significant energy action. Therefore, it does not require a Statement of Energy Effects under Executive Order 13211.

**Technical Standards**

The National Technology Transfer and Advancement Act (NTTAA) (15 U.S.C. 272 note) directs agencies to use voluntary consensus standards in their regulatory activities unless the agency provides Congress, through the Office of Management and Budget, with an explanation of why using these standards would be inconsistent with applicable law or otherwise impractical. Voluntary consensus standards are technical standards (*e.g.*, specifications of materials, performance, design, or operation; test methods; sampling procedures; and related management systems practices) that are developed or adopted by voluntary consensus standards bodies.

This rule does not use technical standards. Therefore, we did not consider the use of voluntary consensus standards.

**Environment**

We have analyzed this final rule under Commandant Instruction M16475.1D, which guides the Coast Guard in complying with the National Environmental Policy Act of 1969 (NEPA) (42 U.S.C. 4321–4370f), and have concluded that there are no factors in this case that would limit the use of a categorical exclusion under section 2.B.2 of the Instruction. Therefore, this rule is categorically excluded, under figure 2–1, paragraph (32)(e), of the Instruction, from further environmental documentation. It has been determined that this final rule does not significantly impact the environment.

**List of Subjects in 33 CFR Part 117**

Bridges.

**Regulations**

■ For the reasons set out in the preamble, the Coast Guard amends 33 CFR part 117 as follows:

## PART 117—DRAWBRIDGE OPERATION REGULATIONS

■ 1. The authority citation for part 117 continues to read as follows:

**Authority:** 33 U.S.C. 499; Department of Homeland Security Delegation No. 0170.1; 33 CFR 1.05–1(g); section 117.255 also issued under the authority of Pub. L. 102–587, 106 Stat. 5039.

■ 2. Section 117.799 is amended by adding a new paragraph (g)(3) to read as follows:

**§ 117.799 Long Island, New York Inland Waterway from East Rockaway Inlet to Shinnecock Canal.**

* * * * *

(g) * * *

(3) From 10 p.m. to midnight on July 3 each year the draw need not open for the passage of vessel traffic.

* * * * *

Dated: March 21, 2005.

**David P. Pekoske,**

*Rear Admiral, U.S. Coast Guard, Commander, First Coast Guard District.*

[FR Doc. 05–6161 Filed 3–28–05; 8:45 am]

BILLING CODE 4910–15–P

---

## DEPARTMENT OF HOMELAND SECURITY

## Coast Guard

## 33 CFR Part 117

**[CGD01–04–143]**

**RIN 1625–AA09**

## Drawbridge Operation Regulations: Taunton River, MA

**AGENCY:** Coast Guard, DHS.

**ACTION:** Final rule.

**SUMMARY:** The Coast Guard has changed the drawbridge operation regulations that govern the operation of the Brightman Street Bridge, mile 1.8, across the Taunton River between Fall River and Somerset, Massachusetts. This final rule allows the bridge to remain closed for the passage of pleasure craft traffic from 7 a.m. to 9:30 a.m. and 4 p.m. to 6:30 p.m., Monday through Friday, except holidays, from June 1 through August 31. The draw shall open on signal at all times for commercial vessel traffic. This action is expected to help relieve vehicular traffic delays during the morning and afternoon commuter time periods while continuing to meet the reasonable needs of navigation.

**DATES:** This rule is effective April 28, 2005.

**ADDRESSES:** Comments and material received from the public, as well as documents indicated in this preamble as being available in the docket, are part of docket (CGD01–01– ) and are available for inspection or copying at the First Coast Guard District, Bridge Branch Office, 408 Atlantic Avenue, Boston, Massachusetts, 02110, between 7 a.m. and 3 p.m., Monday through Friday, except Federal holidays.

**FOR FURTHER INFORMATION CONTACT:** Mr. John W. McDonald, Bridge Administrator, First Coast Guard District, (617) 223–8364.

**SUPPLEMENTARY INFORMATION:**

**Regulatory Information**

On December 15, 2004, we published a notice of proposed rulemaking (NPRM) entitled Drawbridge Operation Regulations; Taunton River, Massachusetts, in the **Federal Register** (69 FR 75013). We received no comments in response to the notice of proposed rulemaking. No public hearing was requested and none was held.

**Background and Purpose**

The Brightman Street Bridge has a vertical clearance in the closed position of 27 feet at mean high water and 31 feet at mean low water. The existing drawbridge operation regulations are listed at 33 CFR 117.619(b).

The Town of Somerset and the Massachusetts State Police asked the Coast Guard and the bridge owner, Massachusetts Highway Department, for assistance with vehicular traffic delays resulting from unregulated bridge openings during the morning and afternoon rush hours at the Brightman Street Bridge.

The Coast Guard, in response to the above request, issued a temporary deviation from the drawbridge operation regulations (69 FR 35244) on June 24, 2004, with a request for public comment.

The temporary deviation was in effect for a period of 90 days to test an alternate operation schedule which is the same schedule that was proposed in a notice of proposed rulemaking, published on December 15, 2004.

Under the temporary deviation effective from July 1, 2004 through September 28, 2004, the Brightman Street Bridge remained closed for the passage of pleasure craft from 7 a.m. to 9:30 a.m. and from 4 p.m. to 6:30 p.m., Monday through Friday. Commercial vessel traffic was allowed to pass through the bridge on signal at all times during the 90-day test period.

The drawbridge operation schedule implemented during the 90-day test period successfully alleviated vehicular traffic delays with no known adverse effects on navigation. The Coast Guard received no comment letters in response to the temporary deviation.

As discussed above, the Coast Guard published a notice of proposed rulemaking on December 15, 2004, to make the operating rules tested during the temporary deviation a permanent change to the operation regulations.

**Discussion of Comments and Changes**

The Coast Guard received no comments in response to the notice of proposed rulemaking and as a result, no changes have been made to this final rule.

**Regulatory Evaluation**

This rule is not a ''significant regulatory action'' under section 3(f) of Executive Order 12866, Regulatory Planning and Review, and does not require an assessment of potential costs and benefits under section 6(a)(3), of that Order. The Office of Management and Budget has not reviewed it under that Order. It is not ''significant'' under the regulatory policies and procedures of the Department of Homeland Security (DHS).

This conclusion is based on the fact that the bridge will continue to open at all times for commercial vessel traffic.

**Small Entities**

Under the Regulatory Flexibility Act (5 U.S.C. 601–612), we considered whether this rule would have a significant economic impact on a substantial number of small entities. The term ''small entities'' comprises small businesses, not-for profit organizations that are independently owned and operated and are not dominant in their fields, and governmental jurisdictions with populations less than 50,000.

The Coast Guard certifies under 5 U.S.C. 605(b), that this rule will not have a significant economic impact on a substantial number of small entities.

This conclusion is based on the fact that the bridge will continue to open at all times for commercial vessel traffic.

**Assistance for Small Entities**

Under section 213(a) of the Small Business Regulatory Enforcement Fairness Act of 1996 (Public Law 104–121), we offered to assist small entities in understanding the rule so that they could better evaluate its effects on them and participate in the rulemaking process.

No small entities requested Coast Guard assistance and none was given.

Small businesses may send comments on the actions of Federal employees who enforce, or otherwise determine compliance with, Federal regulations to the Small Business and Agriculture Regulatory Enforcement Ombudsman and the Regional Small Business Regulatory Fairness Boards. The Ombudsman evaluates these actions annually and rates each agency's responsiveness to small business. If you wish to comment on actions by employees of the Coast Guard, call 1–888–REG–FAIR (1–888–734–3247).

**Collection of Information**

This rule calls for no new collection of information under the Paperwork Reduction Act of 1995 (44 U.S.C. 3501–3520).

**Federalism**

A rule has implications for federalism under Executive Order 13132, Federalism, if it has a substantial direct effect on State or local governments and would either preempt State law or impose a substantial direct cost of compliance on them. We have analyzed this rule under that Order and have determined that it does not have implications for federalism.

**Unfunded Mandates Reform Act**

The Unfunded Mandates Reform Act of 1995 (2 U.S.C. 1531–1538) requires Federal agencies to assess the effects of their discretionary regulatory actions. In particular, the Act addresses actions that may result in the expenditure by State, local, or tribal government, in the aggregate, or by the private sector of $100,000,000 or more in any one year. Though this rule will not result in such an expenditure, we do discuss the effects of this rule elsewhere in this preamble.

**Taking of Private Property**

This rule will not effect a taking of private property or otherwise have taking implications under Executive Order 12630, Governmental Actions and Interference with Constitutionally Protected Property Rights.

**Civil Justice Reform**

This rule meets applicable standards in sections 3(a) and 3(b)(2) of Executive Order 12988, Civil Justice Reform, to minimize litigation, eliminate ambiguity, and reduce burden.

**Protection of Children**

We have analyzed this rule under Executive Order 13045, Protection of Children from Environmental Health Risks and Safety Risks. This rule is not an economically significant rule and does not concern an environmental risk to health or risk to safety that may disproportionately affect children.

**Indian Tribal Governments**

This final rule does not have tribal implications under Executive Order 13175, Consultation and Coordination with Indian Tribal Governments, because it does not have substantial direct effect on one or more Indian tribes, on the relationship between the Federal Government and Indian tribes, or on the distribution of power and responsibilities between the Federal Government and Indian tribes.

**Energy Effects**

We have analyzed this rule under Executive Order 13211, Actions Concerning Regulations That Significantly Affect Energy Supply, Distribution, or Use. We have determined that it is not a ''significant energy action'' under that order because it is not a ''significant regulatory action'' under Executive Order 12866 and is not likely to have a significant adverse effect on the supply, distribution, or use of energy. The Administrator of the Office of Information and Regulatory Affairs has not designated it as a significant energy action. Therefore, it does not require a Statement of Energy Effects under Executive Order 13211.

**Technical Standards**

The National Technology Transfer and Advancement Act (NTTAA) (15 U.S.C. 272 note) directs agencies to use voluntary consensus standards in their regulatory activities unless the agency provides Congress, through the Office of Management and Budget, with an explanation of why using these standards would be inconsistent with applicable law or otherwise impractical. Voluntary consensus standards are technical standards (*e.g.*, specifications of materials, performance, design, or operation; test methods; sampling procedures; and related management systems practices) that are developed or adopted by voluntary consensus standards bodies.

This proposed rule does not use technical standards. Therefore, we did not consider the use of voluntary consensus standards.

**Environment**

We have analyzed this final rule under Commandant Instruction M16475.1D, which guides the Coast Guard in complying with the National Environmental Policy Act of 1969 (NEPA) (42 U.S.C. 4321–4370f), and have concluded that there are no factors in this case that would limit the use of a categorical exclusion under section 2.B.2 of the Instruction. Therefore, this rule is categorically excluded, under figure 2–1, paragraph (32)(e), of the Instruction, from further environmental documentation. It has been determined

that this final rule does not significantly impact the environment.

**List of Subjects in 33 CFR Part 117**

Bridges.

**Regulations**

■ For the reasons set out in the preamble, the Coast Guard amends 33 CFR part 117 as follows:

## PART 117—DRAWBRIDGE OPERATION REGULATIONS

■ 1. The authority citation for part 117 continues to read as follows:

**Authority:** 33 U.S.C. 499; Department of Homeland Security Delegation No. 0170.1; 33 CFR 1.05–1(g); section 117.255 also issued under the authority of Pub. L. 102–587, 106 Stat. 5039.

■ 2. Section 117.619 is amended by revising paragraph (b) to read as follows:

**§ 117.619 Taunton River.**

* * * * *

(b) The Brightman Street Bridge, at mile 1.8, between Fall River and Somerset, shall open on signal, except that:

(1) From June 1 through August 31, the draw need not open for the passage of pleasure craft, 7 a.m. to 9:30 a.m. and 4 p.m. to 6:30 p.m., Monday through Friday, except holidays. The draw shall open on signal for commercial vessel traffic at all times.

(2) From November 1 through March 31, between 6 p.m. and 6 a.m. daily, the draw shall open if at least a one-hour advance notice is given by calling the number posted at the bridge.

(3) From 6 p.m. on December 24 to midnight on December 25, and from 6 p.m. on December 31 to midnight on January 1, the draw shall open on signal if at least a two-hour advance notice is given by calling the number posted at the bridge.

* * * * *

Dated: March 21, 2005.

**David P. Pekoske,**

*Rear Admiral, U.S. Coast Guard, Commander, First Coast Guard District.*

[FR Doc. 05–6165 Filed 3–28–05; 8:45 am]

BILLING CODE 4910–15–P

## DEPARTMENT OF HOMELAND SECURITY

## Coast Guard

## 33 CFR Part 117

**[CGD01–05–019]**

## Drawbridge Operation Regulations: Newtown Creek, Dutch Kills, English Kills, and Their Tributaries, NY

**AGENCY:** Coast Guard, DHS.

**ACTION:** Notice of temporary deviation from regulations.

**SUMMARY:** The Commander, First Coast Guard District, has issued a temporary deviation from the drawbridge operation regulations for the Metropolitan Avenue Bridge, mile 3.4, across English Kills at New York City, New York. Under this temporary deviation the bridge may remain in the closed position from April 7, 2005 through April 8, 2005, and from April 13, 2005 through April 15, 2005. This temporary deviation is necessary to facilitate bridge maintenance.

**DATES:** This deviation is effective from April 7, 2005 through April 15, 2005.

**FOR FURTHER INFORMATION CONTACT:** Judy Leung-Yee, Project Officer, First Coast Guard District, at (212) 668–7195.

**SUPPLEMENTARY INFORMATION:** The Metropolitan Avenue Bridge has a vertical clearance in the closed position of 10 feet at mean high water and 15 feet at mean low water. The existing drawbridge operation regulations are listed at 33 CFR 117.801(e).

The owner of the bridge, New York City Department of Transportation (NYCDOT), requested a temporary deviation from the drawbridge operation regulations to facilitate rehabilitation repairs at the bridge. The bridge must remain in the closed position to perform these repairs.

Under this temporary deviation the NYCDOT Metropolitan Avenue Bridge may remain in the closed position from April 7, 2005 through April 8, 2005, and from April 13, 2005 through April 15, 2005.

This deviation from the operating regulations is authorized under 33 CFR 117.35, and will be performed with all due speed in order to return the bridge to normal operation as soon as possible.

Dated: March 22, 2005.

**Gary Kassof,**

*Bridge Program Manager, First Coast Guard District.*

[FR Doc. 05–6163 Filed 3–28–05; 8:45 am]

BILLING CODE 4910–15–P

## DEPARTMENT OF HOMELAND SECURITY

## Coast Guard

## 33 CFR Part 165

**[CGD05–05–007]**

**RIN 1625–AA00**

## Safety Zone; Delaware River

**AGENCY:** Coast Guard, DHS.

**ACTION:** Temporary final rule.

**SUMMARY:** The Coast Guard is establishing a temporary safety zone in the Delaware River encompassing all waters from the Commodore Barry Bridge to the Benjamin Franklin Bridge. This temporary safety zone is needed for the T/V ATHOS 1 response operations and will protect cleanup crews from excessive wake caused by transiting vessels, provide for the safety of life, property and facilitate oil spill environmental response activities. All vessels transiting the safety zone must minimize wake as to not affect response operations.

**DATES:** This rule is effective from March 22, 2005 until June 30, 2005.

**ADDRESSES:** Documents indicated in this preamble as being available in the docket are part of docket CGD05–05–007 and are available for inspection or copying at Coast Guard Marine Safety Office Philadelphia, One Washington Avenue, Philadelphia, Pennsylvania 19147, between 8 a.m. and 4 p.m., Monday through Friday, except Federal holidays.

**FOR FURTHER INFORMATION CONTACT:** Lieutenant Junior Grade Jill Munsch or Ensign Otis Barrett, Coast Guard Marine Safety Office/Group Philadelphia, at (215) 271–4889.

**SUPPLEMENTARY INFORMATION:**

### Regulatory Information

We did not publish a notice of proposed rulemaking (NPRM) for this regulation. Under 5 U.S.C. 553(b)(B) and (d)(3), the Coast Guard finds that good cause exists for not publishing a NPRM and for making this regulation effective less than 30 days after publication in the **Federal Register**. Publishing a NPRM and delaying its effective date would be contrary to public interest, since immediate action is needed to protect mariners against potential hazards associated with oil spill recovery operations and to ensure the safety of the environment on the Delaware River and its' tributaries. Due to the amount of time needed to clean up the oil spill, this safety zone is needed to facilitate safe oil spill recovery operations.

**Background and Purpose**

On November 27, 2004 at 9:30 p.m. the T/V ATHOS I reported a major discharge of oil on the waters of the Delaware River. Oil spill response operations are being conducted in the safety zone. A number of oil spill response vessels and clean up personnel will be in the safety zone during the duration of the response operations. This rule establishes a safety zone, on the Delaware River covering all the waters of the area bound from the Commodore Barry Bridge to the Benjamin Franklin Bridge, shoreline to shoreline. Mariners transiting the safety zone must minimize wake as to not affect clean up operations. The safety zone will protect mariners and oil spill responders from the hazards associated with spill recovery and clean up operations. The Captain of the Port will notify the maritime community, via marine broadcasts, of any changes made to the safety zone.

**Regulatory Evaluation**

This temporary rule is not a ''significant regulatory action'' under section 3(f) of Executive Order 12866 and does not require an assessment of potential costs and benefits under section 6(a)(3) of that Order. The Office of Management and Budget has not reviewed it under that Order. It is not significant under the regulatory policies and procedures of the Department of Homeland Security (DHS).

We expect the economic impact of this rule to be minimal that a full Regulatory Evaluation under the regulatory policies and procedures of DHS is unnecessary.

**Small Entities**

Under the Regulatory Flexibility Act (5 U.S.C. 601–612), we considered whether this rule will have a significant economic impact on a substantial number of small entities. The term ''small entities'' comprises small businesses, not-for-profit organizations that are independently owned and operated and are not dominant in their fields, and governmental jurisdictions with populations of less than 50,000.

This rule will have virtually no impact on any small entities. This rule does not require a general notice of proposed rulemaking and, therefore, it is exempt from the requirement of the Regulatory Flexibility Act. Although this rule is exempt, we have reviewed it for potential economic impact on small entities.

Therefore, the Coast Guard certifies under section 605 (b) of the Regulatory Flexibility Act (5 U.S.C. 605(b)) that this rule will not have a significant impact on a substantial number of small entities.

**Assistance for Small Entities**

Under section 213(a) of the Small Business Regulatory Enforcement Fairness Act of 1996 (Pub. L. 104–121), we want to assist small entities in understanding this rule so that they can better evaluate its effects on them and participate in the rulemaking process.

Small businesses may send comments on the actions of Federal employees who enforce or otherwise determine compliance with Federal regulations to the Small Business and Agriculture Regulatory Enforcement Ombudsman and the Regional Small Business Regulatory Fairness Boards. The Ombudsman evaluates these actions annually and rates each agency's responsiveness to small business. If you wish to comment on actions by employees of the Coast Guard, call 1–888–REG–FAIR (1–888–743–3247).

**Collection of Information**

This rule calls for no new collection of information under the Paperwork Reduction Act of 1995 (44 U.S.C. 3501–3520.).

**Federalism**

A rule has implications for federalism under Executive Order 13132, Federalism, if it has a substantial direct effect on State or local governments and would either preempt State law or impose a substantial direct cost of compliance on them. We have analyzed this rule under that Order and have determined that this rule does not have implications for federalism.

**Unfunded Mandates Reform Act**

The Unfunded Mandates Reform Act of 1995 (2 U.S.C. 1531–1538) requires Federal agencies to assess the effects of their discretionary regulatory actions. In particular, the Act addresses actions that may result in the expenditure by a State, local or tribal government, in the aggregate, or by the private sector of $100,000,000 or more in any one year. Though this rule does not result in such expenditure, we do discuss the effects of this rule elsewhere in this preamble.

**Taking of Private Property**

This rule does not effect a taking of private property or otherwise have taking implications under Executive Order 12630, Governmental Actions and Interference with Constitutionally Protected Property Rights.

**Civil Justice Reform**

This rule meets applicable standards in sections 3(a) and 3(b)(2) of Executive Order 12988, Civil Justice Reform, to minimize litigation, eliminate ambiguity, and reduce burden.

**Protection of Children**

We have analyzed this rule under Executive Order 13045, Protection of Children from Environmental Health Risks and Safety Risks. This rule is not an economically significant rule and does not concern an environmental risk to health or risk to safety that may disproportionately affect children.

**Indian Tribal Governments**

This rule does not have tribal implications under Executive Order 13175, Consultation and Coordination with Indian Tribal Governments, because it does not have a substantial direct effect on one or more Indian tribes, on the relationship between the Federal Government and Indian tribes, or on the distribution of power and responsibilities between the Federal Government and Indian tribes.

**Energy Effects**

We have analyzed this rule under Executive Order 12211, Actions Concerning Regulations That Significantly Affect Energy Supply, Distribution, or Use. We have determined that it is not a ''significant energy action'' under that order because it is not a ''significant regulatory action'' under Executive Order 12866 and is not likely to have a significant adverse effect on the supply, distribution, or use of energy. It has not been designated by the Administrator of the Office of Information and Regulatory Affairs as a significant energy action. Therefore, it does not require a Statement of Energy Effects under Executive Order 13211.

**Environment**

We have considered the environmental impact of this rule and concluded that, under figure 2–1, paragraph (34)(g), of Commandant Instruction M16475.lD, this rule is categorically excluded from further environmental documentation. A ''Categorical Exclusion Determination'' is available in the docket where indicated under **ADDRESSES**.

**Technical Standards**

The National Technology Transfer and Advancement Act (NTTAA) (15 U.S.C. 272 note) directs agencies to use voluntary consensus standards in their regulatory activities unless the agency provides Congress, through the Office of Management and Budget, with an

explanation of why using these standards would be inconsistent with applicable law or otherwise impractical. Voluntary consensus standards are technical standards (*e.g.,* specifications of materials, performance, design, or operation; test methods; sampling procedures; and related management systems practices) that are developed or adopted by voluntary consensus standards bodies. This rule does not use technical standards. Therefore, we did not consider the use of voluntary consensus standards.

**List of Subjects in 33 CFR Part 165**

Harbors, Marine safety, Navigation (water), Reporting and recordkeeping requirements, Security measures, Waterways.

■ For the reasons discussed in the preamble, the Coast Guard amends 33 CFR part 165 as follows:

## PART 165—REGULATED NAVIGATION AREAS AND LIMITED ACCESS AREAS

■ 1. The authority citation for part 165 continues to read as follows:

**Authority:** 33 U.S.C. 1226, 1231; 46 U.S.C. Chapter 701; 50 U.S.C. 191, 195; 33 CFR 1.05–1(g), 6.04–1, 6.04–6, and 160.5; Pub. L. 107–295, 116 Stat. 2064; Department of Homeland Security Delegation No. 0170.1

■ 2. From March 22, 2005 until June 30, 2005, add temporary § 165.T05–007 to read as follows:

**§ 165.T05–007 Safety zone; Delaware River.**

(a) *Location.* The following area is a temporary safety zone: All waters of the Delaware River from the Commodore Barry Bridge to the Benjamin Franklin Bridge, shoreline to shoreline.

(b) *Regulations.* All persons are required to comply with the general regulations governing safety zones in 33 CFR 165.23 of this part.

(1) All persons transiting through the safety zone must minimize wake as to not affect clean up operations.

(2) All Coast Guard assets enforcing this safety zone can be contacted on VHF marine band radio, channels 13 and 16. The Captain of the Port can be contacted at (215) 271–4807.

(3) The Captain of the Port will notify the public of any changes in the status of this safety zone by Marine Safety Radio Broadcast on VHF–FM marine band radio, channel 22 (157.1 MHZ).

(c) *Definitions.*

*Captain of the Port* means the Commanding Officer of the Coast Guard Marine Safety Office/Group Philadelphia or any Coast Guard commissioned warrant or petty officer who has been authorized by the Captain of the Port to act on his behalf.

(d) *Effective period.* This section is effective from March 22, 2005 until June 30, 2005.

Dated: March 22, 2005.

**Jonathan D. Sarubbi,**

*Captain, U.S. Coast Guard, Captain of the Port Philadelphia.*

[FR Doc. 05–6142 Filed 3–28–05; 8:45 am]

BILLING CODE 4910–15–P

## ENVIRONMENTAL PROTECTION AGENCY

## 40 CFR Part 52

**[R06–OAR–2005–TX–0008; FRL–7890–4]**

## Approval and Promulgation of Air Quality Implementation Plans; Texas; Revisions To Control Volatile Organic Compound Emissions

**AGENCY:** Environmental Protection Agency (EPA).

**ACTION:** Direct final rule.

**SUMMARY:** EPA is taking direct final action to approve Texas State Implementation Plan (SIP) revisions. The revisions pertain to regulations to control volatile organic compound (VOC) emissions from solvent degreasing processes, cutback asphalt, and motor vehicle fuel dispensing facilities. The revisions are consistent with requirements for Reasonably Available Control Technology (RACT) and also expand the coverage to the Early Action Compact (EAC) areas of Austin-San Marcos and San Antonio. We are approving the revisions pursuant to sections 110, 116 and part D of the Federal Clean Air Act (CAA). The control of VOC emissions will help to attain and maintain the national ambient air quality standards (NAAQS) for ozone in Texas. This approval will make the revised regulations Federally enforceable.

**DATES:** This rule is effective on May 31, 2005 without further notice, unless EPA receives relevant adverse comment by April 28, 2005. If EPA receives such comment, EPA will publish a timely withdrawal in the **Federal Register** informing the public that this rule will not take effect.

**ADDRESSES:** Submit your comments, identified by Regional Materials in EDocket (RME) ID No. R06–OAR–2005–TX–0008, by one of the following methods:

- *Federal eRulemaking Portal: http://www.regulations.gov.* Follow the on-line instructions for submitting comments.
- *Agency Web site: http://docket.epa.gov/rmepub/.* Regional Materials in EDocket (RME), EPA's electronic public docket and comment system, is EPA's preferred method for receiving comments. Once in the system, select ''quick search,'' then key in the appropriate RME Docket identification number. Follow the online instructions for submitting comments.
- *EPA Region 6 ''Contact Us'' web site: http://epa.gov/region6/r6coment.htm.* Please click on ''6PD'' (Multimedia) and select ''Air'' before submitting comments.
- *E-mail:* Mr. Thomas Diggs at *diggs.thomas@epa.gov.* Please also send a copy by email to the person listed in the **FOR FURTHER INFORMATION CONTACT** section below.
- *Fax:* Mr. Thomas Diggs, Chief, Air Planning Section (6PD–L), at fax number 214–665–7263.
- *Mail:* Mr. Thomas Diggs, Chief, Air Planning Section (6PD–L), Environmental Protection Agency, 1445 Ross Avenue, Suite 1200, Dallas, Texas 75202–2733.
- *Hand or Courier Delivery:* Mr. Thomas Diggs, Chief, Air Planning Section (6PD–L), Environmental Protection Agency, 1445 Ross Avenue, Suite 1200, Dallas, Texas 75202–2733. Such deliveries are accepted only between the hours of 8 a.m. and 4 p.m. weekdays except for legal holidays. Special arrangements should be made for deliveries of boxed information.

*Instructions:* Direct your comments to RME ID No. R06-OAR–2005–TX–0008. EPA's policy is that all comments received will be included in the public file without change and may be made available online at *http://docket.epa.gov/rmepub/*, including any personal information provided, unless the comment includes information claimed to be Confidential Business Information (CBI) or other information the disclosure of which is restricted by statute. Do not submit information through Regional Materials in EDocket (RME), regulations.gov or e-mail if you believe that it is CBI or otherwise protected from disclosure. The EPA RME Web site and the Federal regulations.gov Web site are ''anonymous access'' systems, which means EPA will not know your identity or contact information unless you provide it in the body of your comment. If you send an e-mail comment directly to EPA without going through RME or regulations.gov, your e-mail address will be automatically captured and included as part of the comment that is placed in the public file and made available on the Internet. If you submit

an electronic comment, EPA recommends that you include your name and other contact information in the body of your comment and with any disk or CD-ROM you submit. If EPA cannot read your comment due to technical difficulties and cannot contact you for clarification, EPA may not be able to consider your comment. Electronic files should avoid the use of special characters and any form of encryption, and should be free of any defects or viruses.

*Docket:* All documents in the electronic docket are listed in the Regional Materials in EDocket (RME) index at *http://docket.epa.gov/rmepub/*. Although listed in the index, some information is not publicly available, *i.e.*, CBI or other information whose disclosure is restricted by statute. Certain other material, such as copyrighted material, is not placed on the Internet and will be publicly available only in hard copy form. Publicly available materials relevant to this rulemaking are available either electronically in RME or in the official file, which is available at the Air Planning Section (6PD–L), Environmental Protection Agency, 1445 Ross Avenue, Suite 700, Dallas, Texas 75202–2733. The file will be made available by appointment for public inspection in the Region 6 FOIA Review Room between the hours of 8:30 a.m. and 4:30 p.m. weekdays except for legal holidays. Contact the person listed in the **FOR FURTHER INFORMATION CONTACT** paragraph below or Mr. Bill Deese at 214–665–7253 to make an appointment. If possible, please make the appointment at least two working days in advance of your visit. There will be a 15 cent per page fee for making photocopies of documents. On the day of the visit, please check in at the EPA Region 6 reception area at 1445 Ross Avenue, Suite 700, Dallas, Texas.

The State submittal is also available for public inspection at the State Air Agency listed below during official business hours by appointment:

Texas Commission on Environmental Quality, Office of Air Quality, 12124 Park 35 Circle, Austin, Texas 78753.

**FOR FURTHER INFORMATION CONTACT:** Carl Young, Air Planning Section (6PD–L), Environmental Protection Agency, Region 6, 1445 Ross Avenue, Suite 700, Dallas, Texas 75202–2733, telephone 214–665–6645; fax number 214–665–7263; e-mail address *young.carl@epa.gov.*

**SUPPLEMENTARY INFORMATION**

Throughout this document, whenever ''we'' ''us'' or ''our'' is used, we mean the EPA.

**Outline**

I. What Is a SIP?
II. What Revisions Were Made to the Texas SIP?
III. What Action Is EPA Taking?
IV. What Is the Effect of This Action?
V. Final Action
VI. Statutory and Executive Order Reviews

## I. What Is a SIP?

Section 110 of the CAA requires states to develop air pollution regulations and control strategies to ensure that state air quality meets the NAAQS established by EPA. These ambient standards are established under section 109 of the CAA, and they currently address six criteria pollutants. These pollutants are: carbon monoxide, nitrogen dioxide, ozone, lead, particulate matter, and sulfur dioxide.

Each state which contains areas that are not attaining the NAAQS, must submit these regulations and control strategies to us for approval and incorporation into the federally-enforceable SIP.

Each federally-approved SIP protects air quality primarily by addressing air pollution at its point of origin. These SIPs can be extensive, containing state regulations or other enforceable documents and supporting information such as emission inventories, monitoring networks, and modeling demonstrations.

## II. What Revisions Were Made to the Texas SIP?

Revisions made to the SIP amended existing requirements and added new requirements to control VOC emissions. The revisions also made a variety of changes which (1) clarify and add flexibility to existing requirements, (2) correct technical and typographical errors, (3) update references to terms and cross references, and (4) delete redundant language and language made obsolete by the passing of compliance dates.

The revisions added new requirements to control VOC emissions in the Austin-San Marcos and San Antonio EAC areas (30 TAC 115.227). The Austin-San Marcos EAC area includes Bastrop, Caldwell, Hays, Travis and Williamson Counties. The San Antonio EAC area includes Bexar, Comal, Guadalupe and Wilson Counties. Motor vehicle fuel dispensing facilities in these areas must meet gasoline vapor recovery control requirements no later than December 31, 2005. For these areas the exemption level for facilities subject to gasoline vapor recovery controls was lowered from those dispensing less than 125,000 gallons of gasoline to those dispensing less than 25,000 gallons in a month. Under these requirements the vapors from the gasoline station storage tanks must be captured as tank-trucks fill these tanks and the vapors returned to the tank-truck. This is commonly known as Stage I vapor recovery. The tank-truck then carries the vapors back to the bulk gasoline plant or terminal. To insure the vapors are not lost in transit, the Texas rules also include requirements that the gasoline tank-trucks be tested for vapor tightness.

Motor vehicle fuel dispensing facilities in the Beaumont-Port Arthur, Dallas-Fort Worth, El Paso, and Houston-Galveston areas are subject to new requirements (30 TAC 115.242). The counties in these areas are Brazoria, Chambers, Collin, Dallas, Denton, El Paso, Fort Bend, Galveston, Harris, Hardin, Jefferson, Liberty, Montgomery, Orange, Tarrant, and Waller. Facilities in these counties that dispense 10,000 gallons of fuel or more per month are required to operate Stage II gasoline vapor recovery systems. Stage II gasoline vapor recovery systems control VOC vapor releases during the refueling of motor vehicles. This process takes the vapors normally emitted directly into the atmosphere when pumping gas and recycles them back into the fuel storage tanks, preventing them from polluting the air. The revisions updated regulations that ensure that, where required, gasoline vapor recovery systems maintain a recovery rate of 95% or greater. Beginning April 1, 2005 new Stage II systems must be compatible with onboard refueling vapor recovery (ORVR) equipment required on newer vehicles. Existing Stage II systems must be upgraded to an ORVR compatible system no later than April 1, 2007. This should decrease the amount of excess emissions caused by incompatibility between ORVR and Stage II recovery systems. Testing of Stage II recovery systems was increased from a five-year requirement to a one-year requirement, with the exception of the vapor space manifold test and the dynamic back pressure test, which are required every three years. The Texas SIP was also revised to remove language that could potentially provide a Stage I exemption for a facility that is required to have Stage II vapor recovery (30 TAC 227). All Stage II vapor recovery systems must include Stage I vapor recovery in order to operate properly.

Existing facilities in the San Antonio and Austin Early EAC areas that employ solvent using processes for cleaning and degreasing are required to implement VOC controls no later than December 31, 2005 (30 TAC 115 sections 412, 416, 415–417, and 419). These controls were

already required for new facilities in the State.

Testing methods used to determine compliance for Texas facilities subject to requirements for solvent degreasing were expanded to allow use of additional test methods provided the method was validated by EPA Test Method 301 found in 40 CFR 63, Appendix A (30 TAC 115.415(3)). These methods are used to measure vapor pressure, flow rates, and gaseous emissions for solvent degreasing processes. The regulations apply to operations that use solvent degreasing processes in the Beaumont-Port Arthur, Dallas-Fort Worth, El Paso, Houston-Galveston 1-hour ozone nonattainment areas, the Austin-San Marcos and San Antonio EAC areas, and Gregg, Nueces and Victoria Counties. The Austin-San Marcos and San Antonio EAC areas were added in these submitted revisions. The revisions also add a minor recordkeeping requirement necessary to determine whether solvent degreasing operations in Gregg, Nueces, and Victoria Counties are exempt from VOC controls (30 TAC 115.416(3)). This requirement states that the operator must keep records in sufficient detail to document compliance with the exemption cutoff limit of 550 pounds of VOC emissions in any consecutive 24-hour period.

The revisions added new requirements for using cutback asphalt in the Austin EAC area. Cutback asphalt consists of asphalt cement blended with a petroleum solvent. The requirements were already in place for the Beaumont-Port Arthur, Dallas-Fort Worth, El Paso and Houston-Galveston areas (30 TAC 115 sections 512, 516, 517, and 519). The requirements state that (1) the use of conventional cutback asphalt containing VOC solvents for the paving of roadways, driveways, or parking lots is restricted to no more than 7.0% of the total annual volume averaged over a two-year period of asphalt used by or specified for use by any state, municipal, or county agency who uses or specifies the type of asphalt application; and (2) the use, application, sale, or offering for sale of conventional cutback asphalt containing VOC solvents for paving roadways, driveways, or parking lots is prohibited during the period from April 16 to September 15 of any year.

## III. What Action Is EPA Taking?

EPA is taking direct final action to approve revisions to the Texas ozone SIP (Texas SIP) that pertain to regulations which control VOC emissions in Texas. The revisions were adopted by the State of Texas and submitted to EPA on (1) September 7, 2001, (2) November 14, 2002, (3) January 28, 2003, and (4) December 6, 2004.

The revisions submitted to EPA on September 7, 2001 that are being approved pertain to control of VOC emissions from degreasing processes and cutback asphalt. The EPA previously approved rules for degreasing and cutback asphalt into the Texas SIP as meeting RACT requirements for the Beaumont-Port Arthur, Dallas-Fort Worth, El Paso, Houston-Galveston, and Victoria 1-hour ozone nonattainment areas on March 7, 1995 (60 FR 12438). The submitted revisions amended §§ 115.412, 115.413, 115.415, 115.416, 115.417, 115.419, 115.512, 115.517, and 115.519 in 30 TAC Chapter 115, Control of Air Pollution from Volatile Organic Compounds. The revisions made a variety of changes which clarify and add flexibility to existing requirements, correct technical and typographical errors, update references to terms, and delete redundant language and language made obsolete by the passing of compliance dates. The revisions expand testing methods used to determine compliance for Texas facilities subject to requirements for solvent degreasing. The revisions also add a minor recordkeeping requirement necessary to determine whether degreasing operations in Gregg, Nueces, and Victoria Counties are exempt from VOC controls (30 TAC 115.416(3)). EPA is approving these revisions under part D of the Act because they improve the SIP-approved rules and they are consistent with the RACT requirements and guidance for ozone nonattainment areas. Other revisions submitted to EPA on September 7, 2001 will be addressed in another **Federal Register** action. See our Technical Support Document (TSD) for more information.

The revisions submitted to EPA on November 14, 2002 that are being approved pertain to the control of gasoline vapors from refueling of motor vehicles, Stage II, in the Beaumont-Port Arthur, Dallas-Fort Worth, El Paso, and Houston 1-hour ozone nonattainment areas. The EPA previously approved the Stage II rules for the four 1-hour ozone nonattainment areas on April 15, 1994 (59 FR 17940). The submitted revisions amended §§ 115.227, and 115.240–115.249 in 30 TAC 115. The revisions ensure that gasoline vapor recovery systems maintain a recovery rate of 95% or greater and make new Stage II systems compatible with onboard refueling vapor recovery (ORVR) equipment required on newer vehicles, beginning April 1, 2005. This should decrease the amount of excess emissions caused by incompatibility between ORVR and Stage II recovery systems. The revisions also removed language that could potentially provide a Stage I exemption for a facility that is required to have Stage II vapor recovery. EPA is approving these Stage II revisions under part D of the Act because they improve the SIP-approved rules and they are consistent with the Stage II requirements and guidance for ozone nonattainment areas.

The revisions submitted to EPA on January 28, 2003 that are being approved pertain to the control of VOC emissions from (1) filling of gasoline storage vessels for motor vehicle fuel dispensing facilities, Stage I, and (2) leaks from the gasoline tank trucks as they return to the bulk gasoline plant or terminal. Under the 1990 Amendments, the EPA approved revised Texas Stage I rules into the Texas SIP for the Houston-Galveston, Dallas-Fort Worth, El Paso, and Beaumont-Port Arthur 1-hour ozone nonattainment areas on March 7, 1995 (60 FR 12438). The EPA approved revisions to these rules covering the eastern half of the State of Texas on December 20, 2000 (65 FR 79745) under part D of the Act because Texas relied upon these VOC reductions to demonstrate attainment of the 1-hour ozone standard in the Beaumont-Port Arthur, Dallas-Fort Worth, and Houston-Galveston areas. We also approved them under section 110 and 116 because Texas relied upon these rules for the continued maintenance of the standard in the eastern half of the State of Texas and as a strengthening of the Texas SIP. The submitted revisions amended §§ 115.229, 115.239, in 30 TAC 115. The revisions made a variety of changes which clarify existing requirements, update cross references and delete language made obsolete by the passing of compliance dates. We are approving these revisions under part D and sections 110 and 116 because they improve the SIP-approved rules and they are consistent with the requirements and guidance. Other revisions submitted to EPA on January 28, 2003 will be addressed in another **Federal Register** action. See our TSD for more information.

The revisions submitted to EPA on December 6, 2004 that are being approved pertain to the control of VOC emissions in Austin-San Marcos and San Antonio EAC areas. An EAC is a voluntary plan to meet the national 8-hour ambient air quality ozone standard for an area that is approaching or monitoring exceedances of the standard. The Austin-San Marcos EAC area includes Bastrop, Caldwell, Hays, Travis

and Williamson Counties. The San Antonio EAC area includes Bexar, Comal, Guadalupe and Wilson Counties. The submitted revisions amended §§ 115.227, 115.229, 115.412, 115.413, 115.415–115.417, 115.419, 115.512, 115.516, 115.517, and 115.519 in 30 TAC 115. These revisions lowered the applicability threshold for Stage I and added the degreasing VOC requirements in the two areas, and added the cutback asphalt VOC requirements in the Austin EAC area.

## IV. What Is the Effect of This Action?

This action approves revisions to the Texas SIP that pertain to regulations to control VOC emissions. This approval will make these revised regulations federally enforceable. Enforcement of the regulations in a State SIP before and after it is incorporated into the federally approved SIP is primarily a state responsibility. However, after the regulations are federally approved, we are authorized to take enforcement action against violators. Citizens are also offered legal recourse to address violations as described in section 304 of the CAA.

## V. Final Action

EPA is approving revisions to the Texas SIP pertaining to control of VOC emissions. The revisions were submitted to EPA by the State of Texas on (1) September 7, 2001, (2) November 14, 2002, (3) January 28, 2003 and (4) December 6, 2004. The revisions being approved are §§ 115.227, 115.229, 115.239–115.249, 115.412, 115.413, 115.415–115.417, 115.419, 115.512, 115.516, 115.517, and 115.519 in 30 TAC Chapter 115, Control of Air Pollution from Volatile Organic Compounds.

We have evaluated the State's submittal and have determined that it meets the applicable requirements of the CAA and EPA air quality regulations, and is consistent with EPA policy. Therefore, we are approving revisions to the Texas SIP which revise regulations to control VOC emissions.

EPA is publishing this rule without prior proposal because we view this as a noncontroversial amendment and anticipate no relevant adverse comments. However, in the proposed rules section of this **Federal Register** publication, we are publishing a separate document that will serve as the proposal to approve the SIP revision if relevant adverse comments are received. This rule will be effective on May 31, 2005 without further notice unless we receive relevant adverse comment by April 28, 2005. If we receive relevant adverse comments, we will publish a timely withdrawal in the **Federal Register** informing the public that the rule will not take effect. We will address all public comments in a subsequent final rule based on the proposed rule. We will not institute a second comment period on this action. Any parties interested in commenting must do so now. Please note that if we receive adverse comment on an amendment, paragraph, or section of this rule and if that provision may be severed from the remainder of the rule, we may adopt as final those provisions of the rule that are not the subject of an adverse comment.

## VI. Statutory and Executive Order Reviews

Under Executive Order 12866 (58 FR 51735, October 4, 1993), this action is not a ''significant regulatory action'' and therefore is not subject to review by the Office of Management and Budget. For this reason, this action is also not subject to Executive Order 13211, ''Actions Concerning Regulations That Significantly Affect Energy Supply, Distribution, or Use'' (66 FR 28355, May 22, 2001). This action merely approves state law as meeting Federal requirements and imposes no additional requirements beyond those imposed by state law. Accordingly, the Administrator certifies that this rule will not have a significant economic impact on a substantial number of small entities under the Regulatory Flexibility Act (5 U.S.C. 601 *et seq.*). Because this rule approves pre-existing requirements under state law and does not impose any additional enforceable duty beyond that required by state law, it does not contain any unfunded mandate or significantly or uniquely affect small governments, as described in the Unfunded Mandates Reform Act of 1995 (Pub. L. 104–4).

This rule also does not have tribal implications because it will not have a substantial direct effect on one or more Indian tribes, on the relationship between the Federal Government and Indian tribes, or on the distribution of power and responsibilities between the Federal Government and Indian tribes, as specified by Executive Order 13175 (65 FR 67249, November 9, 2000). This action also does not have federalism implications because it does not have substantial direct effects on the States, on the relationship between the national government and the States, or on the distribution of power and responsibilities among the various levels of government, as specified in Executive Order 13132 (64 FR 43255, August 10, 1999). This action merely approves a state rule implementing a Federal standard, and does not alter the relationship or the distribution of power and responsibilities established in the Clean Air Act. This rule also is not subject to Executive Order 13045 ''Protection of Children from Environmental Health Risks and Safety Risks'' (62 FR 19885, April 23, 1997), because it is not economically significant.

In reviewing SIP submissions, EPA's role is to approve state choices, provided that they meet the criteria of the Clean Air Act. In this context, in the absence of a prior existing requirement for the State to use voluntary consensus standards (VCS), EPA has no authority to disapprove a SIP submission for failure to use VCS. It would thus be inconsistent with applicable law for EPA, when it reviews a SIP submission, to use VCS in place of a SIP submission that otherwise satisfies the provisions of the Clean Air Act. Thus, the requirements of section 12(d) of the National Technology Transfer and Advancement Act of 1995 (15 U.S.C. 272 note) do not apply. This rule does not impose an information collection burden under the provisions of the Paperwork Reduction Act of 1995 (44 U.S.C. 3501 *et seq.*).

The Congressional Review Act, 5 U.S.C. section 801 *et seq.*, as added by the Small Business Regulatory Enforcement Fairness Act of 1996, generally provides that before a rule may take effect, the agency promulgating the rule must submit a rule report, which includes a copy of the rule, to each House of the Congress and to the Comptroller General of the United States. EPA will submit a report containing this rule and other required information to the U.S. Senate, the U.S. House of Representatives, and the Comptroller General of the United States prior to publication of the rule in the **Federal Register**. A major rule cannot take effect until 60 days after it is published in the **Federal Register**. This action is not a ''major rule'' as defined by 5 U.S.C. section 804(2).

Under section 307(b)(1) of the Clean Air Act, petitions for judicial review of this action must be filed in the United States Court of Appeals for the appropriate circuit by May 31, 2005. Filing a petition for reconsideration by the Administrator of this final rule does not affect the finality of this rule for the purposes of judicial review nor does it extend the time within which a petition for judicial review may be filed, and shall not postpone the effectiveness of such rule or action. This action may not be challenged later in proceedings to enforce its requirements. (See section 307(b)(2).)

**List of Subjects in 40 CFR Part 52**

Environmental protection, Air pollution control, Intergovernmental relations, Ozone, Reporting and recordkeeping requirements, Volatile organic compounds.

Dated: March 18, 2005.

**Richard E. Greene,**

*Regional Administrator, Region 6.*

■ 40 CFR part 52 is amended as follows:

## PART 52—[AMENDED]

■ 1. The authority citation for part 52 continues to read as follows:

**Authority:** 42 U.S.C. 7402 *et seq.*

## Subpart SS—Texas

■ 2. The table in § 52.2270(c) entitled ''EPA Approved Regulations in the Texas SIP'' under Chapter 115 (Reg 5) is amended as follows:

■ a. Immediately following the centered heading ''Subchapter E: Solvent-Using Processes'' by adding a new centered heading ''Division 1: Degreasing Processes'';

■ b. Removing the entry ''Section 115.412 to 115.419'' in Subchapter E and replacing it with entries for Sections 115.412, 115.413, 115.415, 115.416, 115.417 and 115.419;

■ c. Removing the ''State approval/Submittal date'' and ''EPA approval date'' entries for Sections 115.227, 115.229, 115.239, 115.512, 115.516, 115.517, and 115.519 and replacing the entries as follows:

**§ 52.2270 Identification of plan.**

* * * * *

(c) * * *

EPA.—APPROVED REGULATIONS IN THE TEXAS SIP

| State citation | Title/subject | State approval/submittal date | EPA approval date | Explanation |
|---|---|---|---|---|
| * | * | * | * | * |
| **Chapter 115 (Reg 5)—Control of Air Pollution From Volatile Organic Compounds** | | | | |
| * | * | * | * | * |
| **Subchapter C: Volatile Organic Compound Transfer Operations** | | | | |
| **Division 2: Filling of Gasoline Storage Vessels (Stage I) for Motor Vehicle Fuel Dispensing Facilities** | | | | |
| * | * | * | * | * |
| Section 115.227 | Exemptions | 11/17/04 | 3/29/05 [Insert FR page number where document begins]. | |
| Section 115.229 | Counties and Compliance Schedule | 11/17/04 | 3/29/05 [Insert FR page number where document begins]. | |
| * | * | * | * | * |
| **Division 3: Control of Volatile Organic Compound Leaks From Transport Vessels** | | | | |
| * | * | * | * | * |
| Section 115.239 | Counties and Compliance Schedules | 1/28/03 | 3/29/05 [Insert FR page number where document begins]. | |
| * | * | * | * | * |
| **Division 4: Control of Vehicle Refueling Emissions (Stage II) at Motor Vehicle Fuel Dispensing Facilities** | | | | |
| Section 115.240 | Stage II Vapor Recovery Definitions and List of California Air Resources Board Certified Stage II Equipment. | 11/6/02 | 3/29/05 [Insert FR page number where document begins]. | |
| Section 115.241 | Emission Specifications | 11/6/02 | 3/29/05 [Insert FR page number where document begins]. | |
| Section 115.242 | Control Requirements | 11/6/02 | 3/29/05 [Insert FR page number where document begins]. | |
| Section 115.243 | Alternate Control Requirements | 11/6/02 | 3/29/05 [Insert FR page number where document begins]. | |
| Section 115.244 | Inspection Requirements | 11/6/02 | 3/29/05 [Insert FR page number where document begins]. | |
| Section 115.245 | Testing Requirements | 11/6/02 | 3/29/05 [Insert FR page number where document begins]. | |
| Section 115.246 | Recordkeeping Requirements | 11/6/02 | 3/29/05 [Insert FR page number where document begins]. | |
| Section 115.247 | Exemptions | 11/6/02 | 3/29/05 [Insert FR page number where document begins]. | |
| Section 115.248 | Training Requirements | 11/6/02 | 3/29/05 [Insert FR page number where document begins]. | |

EPA.—APPROVED REGULATIONS IN THE TEXAS SIP—Continued

| State citation | Title/subject | State approval/submittal date | EPA approval date | Explanation |
|---|---|---|---|---|
| Section 115.249 | Counties and Compliance Schedules | 11/6/02 | 3/29/05 [Insert FR page number where document begins]. | |
| * | * | * | * | * |
| **Subchapter E: Solvent-Using Processes** | | | | |
| **Division 1: Degreasing Processes** | | | | |
| Section 115.412 | Control Requirements | 11/17/04 | 3/29/05 [Insert FR page number where document begins]. | |
| Section 115.413 | Alternate Control Requirements | 11/17/04 | 3/29/05 [Insert FR page number where document begins]. | |
| Section 115.415 | Testing Requirements | 11/17/04 | 3/29/05 [Insert FR page number where document begins]. | |
| Section 115.416 | Recordkeeping Requirements | 11/17/04 | 3/29/05 [Insert FR page number where document begins]. | |
| Section 115.417 | Exemptions | 11/17/04 | 3/29/05 [Insert FR page number where document begins]. | |
| Section 115.419 | Counties and Compliance Schedules | 11/17/04 | 3/29/05 [Insert FR page number where document begins]. | |
| * | * | * | * | * |
| **Subchapter F: Miscellaneous Industrial Sources** | | | | |
| **Division 1: Cutback Asphalt** | | | | |
| Section 115.512 | Control Requirements | 11/17/04 | 3/29/05 [Insert FR page number where document begins]. | |
| Section 115.516 | Recordkeeping Requirements | 11/17/04 | 3/29/05 [Insert FR page number where document begins]. | |
| Section 115.517 | Exemptions | 11/17/04 | 3/29/05 [Insert FR page number where document begins]. | |
| Section 115.519 | Counties and Compliance Schedules | 11/17/04 | 3/29/05 [Insert FR page number where document begins]. | |
| * | * | * | * | * |

[FR Doc. 05–6196 Filed 3–28–05; 8:45 am]
**BILLING CODE 6560–50–P**

## ENVIRONMENTAL PROTECTION AGENCY

### 40 CFR Part 52

**[R03–OAR–2005–PA–0009; FRL–7890–9]**

### Approval and Promulgation of Air Quality Implementation Plans; Pennsylvania; VOC RACT Determinations for Eleven Individual Sources

**AGENCY:** Environmental Protection Agency (EPA).

**ACTION:** Direct final rule.

**SUMMARY:** EPA is taking direct final action to approve revisions to the Commonwealth of Pennsylvania's State Implementation Plan (SIP). The revisions were submitted by the Pennsylvania Department of Environmental Protection (PADEP) to establish and require reasonably available control technology (RACT) for eleven major sources of volatile organic compounds (VOC). These sources are located in Pennsylvania. EPA is approving these revisions to establish RACT requirements in the SIP in accordance with the Clean Air Act (CAA).

**DATES:** This rule is effective on May 31, 2005, without further notice, unless EPA receives adverse written comment by April 28, 2005. If EPA receives such comments, it will publish a timely withdrawal of the direct final rule in the **Federal Register** and inform the public that the rule will not take effect.

**ADDRESSES:** Submit your comments, identified by Regional Material in EDocket (RME) ID Number R03–OAR–2005–PA–0009 by one of the following methods:

A. Federal eRulemaking Portal: *http://www.regulations.gov*. Follow the on-line instructions for submitting comments.

B. Agency Web site: *http://www.docket.epa.gov/rmepub/* RME, EPA's electronic public docket and comment system, is EPA's preferred method for receiving comments. Follow the on-line instructions for submitting comments.

C. E-mail: *morris.makeba@epa.gov*.

D. Mail: R03–OAR–2005–PA–0009, Makeba Morris, Chief, Air Quality Planning Branch, Mailcode 3AP21, U.S. Environmental Protection Agency, Region III, 1650 Arch Street, Philadelphia, Pennsylvania 19103.

E. Hand Delivery: At the previously-listed EPA Region III address. Such deliveries are only accepted during the Docket's normal hours of operation, and

special arrangements should be made for deliveries of boxed information.

*Instructions:* Direct your comments to RME ID No. R03–OAR–2005–PA–0009. EPA's policy is that all comments received will be included in the public docket without change, and may be made available online at *http://www.docket.epa.gov/rmepub/*, including any personal information provided, unless the comment includes information claimed to be Confidential Business Information (CBI) or other information whose disclosure is restricted by statute. Do not submit information that you consider to be CBI or otherwise protected through RME, regulations.gov or e-mail. The EPA RME and the Federal regulations.gov Web sites are an ''anonymous access'' system, which means EPA will not know your identity or contact information unless you provide it in the body of your comment. If you send an e-mail comment directly to EPA without going through RME or regulations.gov, your e-mail address will be automatically captured and included as part of the comment that is placed in the public docket and made available on the Internet. If you submit an electronic comment, EPA recommends that you include your name and other contact information in the body of your comment and with any disk or CD–ROM you submit. If EPA cannot read your comment due to technical difficulties and cannot contact you for clarification, EPA may not be able to consider your comment. Electronic files should avoid the use of special characters, any form of encryption, and be free of any defects or viruses.

*Docket:* All documents in the electronic docket are listed in the RME index at *http://www.docket.epa.gov/rmepub/*. Although listed in the index, some information is not publicly available, *i.e.*, CBI or other information whose disclosure is restricted by statute. Certain other material, such as copyrighted material, is not placed on the Internet and will be publicly available only in hard copy form. Publicly available docket materials are available either electronically in RME or in hard copy during normal business hours at the Air Protection Division, U.S. Environmental Protection Agency, Region III, 1650 Arch Street, Philadelphia, Pennsylvania 19103. Copies of the State submittal are available at the Pennsylvania Department of Environmental Protection, Bureau of Air Quality, P.O. Box 8468, 400 Market Street, Harrisburg, Pennsylvania 17105.

**FOR FURTHER INFORMATION CONTACT:** Pauline De Vose, (215) 814–2186, or by e-mail at *devose.pauline@epa.gov*.

**SUPPLEMENTARY INFORMATION:**

## I. Background

Pursuant to sections 182(b)(2) and 182(f) of the CAA, the Commonwealth of Pennsylvania (the Commonwealth or Pennsylvania) is required to establish and implement RACT for all major VOC and $NO_X$ sources. The major source size is determined by its location, the classification of that area and whether it is located in the ozone transport region (OTR). Under section 184 of the CAA, RACT as specified in sections 182(b)(2) and 182(f) applies throughout the OTR. The entire Commonwealth is located within the OTR. Therefore, RACT is applicable statewide in Pennsylvania.

State implementation plan revisions imposing RACT for three classes of VOC sources are required under section 182(b)(2). The categories are:

(1) All sources covered by a Control Technique Guideline (CTG) document issued between November 15, 1990 and the date of attainment;

(2) All sources covered by a CTG issued prior to November 15, 1990; and

(3) All major non-CTG sources.

The Pennsylvania SIP already has approved RACT regulations and requirements for all sources and source categories covered by the CTGs. The Pennsylvania SIP also has approved regulations to require major sources of $NO_X$ and additional major sources of VOC emissions (not covered by a CTG) to implement RACT. These regulations are commonly termed the ''generic RACT regulations''. A generic RACT regulation is one that does not, itself, specifically define RACT for a source or source categories but instead establishes procedures for imposing case-by-case RACT determinations. The Commonwealth's SIP-approved generic RACT regulations consist of the procedures PADEP uses to establish and impose RACT for subject sources of VOC and $NO_X$. Pursuant to the SIP-approved generic RACT rules, PADEP imposes RACT on each subject source in an enforceable document, usually a Plan Approval (PA) or Operating Permit (OP). The Commonwealth then submits these PAs and OPs to EPA for approval as source-specific SIP revisions.

On August 30, 2004, PADEP submitted revisions to the Pennsylvania SIP which establish and impose RACT for eleven sources of VOC and $NO_X$. The Commonwealth's submittals consist of PAs and OPs which impose VOC and $NO_X$ RACT requirements for each source.

## II. Summary of the SIP Revisions

Copies of the actual PAs and OPs imposing RACT and PADEP's evaluation memoranda are included in the electronic and hard copy docket for this final rule. As previously stated, all documents in the electronic docket are listed in the RME index at *http://www.docket.epa.gov/rmepub/*. Publicly available docket materials are available either electronically in RME or in hard copy during normal business hours at the Air Protection Division, U.S. Environmental Protection Agency, Region III, 1650 Arch Street, Philadelphia, Pennsylvania 19103. Copies of the State submittal are available at the Pennsylvania Department of Environmental Protection, Bureau of Air Quality, P.O. Box 8468, 400 Market Street, Harrisburg, Pennsylvania 17105. The table below identifies the sources and the individual plan approvals (PAs) and operating permits (OPs) which are the subject of this rulemaking.

PENNSYLVANIA—VOC RACT DETERMINATIONS FOR INDIVIDUAL SOURCES

| Source | County | Plan approval (PA No.) Operating Permit (OP No.) | Source Type | ''Major source'' pollutant |
|---|---|---|---|---|
| Information Display Technology, Inc | Indiana | 32–000–085 | Visual Display Material Fabrication | VOC. |
| Bedford Materials Co., Inc | Bedford | 05–02005 | Electrical Insulating Production Facility | VOC. |
| Bollman Hat Company | Lancaster | 36–2031 | Hat Manufacturing | VOC. |
| Armco Inc | Mercer | OP 43–040 | Steel Pipe Manufacturing | VOC. |
| Specialty Tires of America, Inc | Indiana | 32–000–065 | Tire Manufacturing | VOC. |
| Truck Accessories Group East | Northumberland | OP–49–0005 | Fiberglass/Plastics Manufacturing | VOC. |
| Jeraco Enterprises, Inc | Northumberland | OP–49–0014 | Fiberglass/Plastics Manufacturing | VOC. |

PENNSYLVANIA—VOC RACT DETERMINATIONS FOR INDIVIDUAL SOURCES—Continued

| Source | County | Plan approval (PA No.) Operating Permit (OP No.) | Source Type | "Major source" pollutant |
|---|---|---|---|---|
| Insulation Corporation of America | Lehigh | 39–0012 | Expanded Polystyrene Manufacturing Plant | VOC. |
| Pope & Talbot, Inc | Luzerne | 40–0019 | Flexographic Painting Process | VOC. |
| Universal Rundle Corporation | Lawrence | OP 37–059 | Spray-up Fiberglass Operation | VOC. |
| Clark Filter | Lancaster | 36–02040 | Paper Filter Manufacturing | VOC. |

EPA is approving these RACT SIP submittals because PADEP established and imposed these RACT requirements in accordance with the criteria set forth in its SIP-approved generic RACT regulations applicable to these sources. The Commonwealth has also imposed record-keeping, monitoring, and testing requirements on these sources sufficient to determine compliance with the applicable RACT determinations.

## III. Final Action

EPA is approving the revisions to the Pennsylvania SIP submitted by PADEP to establish and require VOC RACT for eleven major sources. EPA is publishing this rule without prior proposal because the Agency views this as a noncontroversial amendment and anticipates no adverse comment. However, in the "Proposed Rules" section of today's **Federal Register**, EPA is publishing a separate document that will serve as the proposal to approve the SIP revision if adverse comments are filed. This rule will be effective on May 31, 2005 without further notice unless EPA receives adverse comment by April 28, 2005. If EPA receives adverse comment, EPA will publish a timely withdrawal in the **Federal Register** informing the public that the rule will not take effect. EPA will address all public comments in a subsequent final rule based on the proposed rule. EPA will not institute a second comment period on this action. Any parties interested in commenting must do so at this time. Please note that if EPA receives adverse comment on an amendment, paragraph, or section of this rule and if that provision may be severed from the remainder of the rule, EPA may adopt as final those provisions of the rule that are not the subject of an adverse comment.

## IV. Statutory and Executive Order Reviews

### *A. General Requirements*

Under Executive Order 12866 (58 FR 51735, October 4, 1993), this action is not a "significant regulatory action" and therefore is not subject to review by the Office of Management and Budget. For this reason, this action is also not subject to Executive Order 13211, "Actions Concerning Regulations That Significantly Affect Energy Supply, Distribution, or Use" (66 FR 28355, May 22, 2001). This action merely approves state law as meeting Federal requirements and imposes no additional requirements beyond those imposed by state law. Accordingly, the Administrator certifies that this rule will not have a significant economic impact on a substantial number of small entities under the Regulatory Flexibility Act (5 U.S.C. 601 *et seq.*). Because this rule approves pre-existing requirements under state law and does not impose any additional enforceable duty beyond that required by state law, it does not contain any unfunded mandate or significantly or uniquely affect small governments, as described in the Unfunded Mandates Reform Act of 1995 (Pub. L. 104–4). This rule also does not have tribal implications because it will not have a substantial direct effect on one or more Indian tribes, on the relationship between the Federal Government and Indian tribes, or on the distribution of power and responsibilities between the Federal Government and Indian tribes, as specified by Executive Order 13175 (65 FR 67249, November 9, 2000). This action also does not have federalism implications because it does not have substantial direct effects on the States, on the relationship between the national government and the States, or on the distribution of power and responsibilities among the various levels of government, as specified in Executive Order 13132 (64 FR 43255, August 10, 1999). This action merely approves a state rule implementing a Federal standard, and does not alter the relationship or the distribution of power and responsibilities established in the Clean Air Act. This rule also is not subject to Executive Order 13045 "Protection of Children from Environmental Health Risks and Safety Risks" (62 FR 19885, April 23, 1997), because it is not economically significant.

In reviewing SIP submissions, EPA's role is to approve state choices, provided that they meet the criteria of the Clean Air Act. In this context, in the absence of a prior existing requirement for the State to use voluntary consensus standards (VCS), EPA has no authority to disapprove a SIP submission for failure to use VCS. It would thus be inconsistent with applicable law for EPA, when it reviews a SIP submission, to use VCS in place of a SIP submission that otherwise satisfies the provisions of the Clean Air Act. Thus, the requirements of section 12(d) of the National Technology Transfer and Advancement Act of 1995 (15 U.S.C. 272 note) do not apply. This rule does not impose an information collection burden under the provisions of the Paperwork Reduction Act of 1995 (44 U.S.C. 3501 *et seq.*).

### *B. Submission to Congress and the Comptroller General*

The Congressional Review Act, 5 U.S.C. 801 *et seq.*, as added by the Small Business Regulatory Enforcement Fairness Act of 1996, generally provides that before a rule may take effect, the agency promulgating the rule must submit a rule report, which includes a copy of the rule, to each House of the Congress and to the Comptroller General of the United States. Section 804 exempts from section 801 the following types of rules: (1) Rules of particular applicability; (2) rules relating to agency management or personnel; and (3) rules of agency organization, procedure, or practice that do not substantially affect the rights or obligations of non-agency parties. 5 U.S.C. 804(3). EPA is not required to submit a rule report regarding today's action under section 801 because this is a rule of particular applicability establishing source-specific requirements for 11 named sources.

### *C. Petitions for Judicial Review*

Under section 307(b)(1) of the Clean Air Act, petitions for judicial review of this action must be filed in the United

States Court of Appeals for the appropriate circuit by May 31, 2005. Filing a petition for reconsideration by the Administrator of this final rule approving source-specific RACT requirements for eleven major sources in the Commonwealth of Pennsylvania does not affect the finality of this rule for the purposes of judicial review nor does it extend the time within which a petition for judicial review may be filed, and shall not postpone the effectiveness of such rule or action. This action may not be challenged later in proceedings to enforce its requirements. (See section 307(b)(2).)

**List of Subjects in 40 CFR Part 52**

Environmental protection, Air pollution control, Ozone, Reporting and recordkeeping requirements, Volatile organic compounds.

Dated: March 18, 2005.

**James Newson,**

*Acting Regional Administrator, Region III.*

■ 40 CFR part 52 is amended as follows:

## PART 52—[AMENDED]

■ 1. The authority citation for part 52 continues to read as follows:

**Authority:** 42 U.S.C. 7401 *et seq.*

## Subpart NN—Pennsylvania

■ 2. In Section 52.2020, the table in paragraph (d)(1) is amended by adding the entry/entries for Information Display Technology, Inc., Bedford Materials Co., Inc., Bollman Hat Company, Armco Inc., Specialty Tires of America, Inc., Truck Accessories Group East, Jeraco Enterprises, Inc., Insulation Corporation of America, Pope & Talbot, Inc., Universal Rundle Corporation, and Clark Filter at the end of the table to read as follows:

**§ 52.2020 Identification of plan.**

* * * * *

(d) * * *

(1) * * *

| Name of source | Permit No. | County | State effective date | EPA approval date | Additional explanation/§ 52.2063 citation |
|---|---|---|---|---|---|
| * * | * | * | * | * | * |
| Information Display Technology, Inc | 32–000–085 | Indiana | 1/11/96 | 3/29/05, [Insert page number where the document begins]. | 52.2020(d)(1)(h). |
| Bedford Materials Co., Inc | 05–02005 | Bedford | 4/15/99 | 3/29/05, [Insert page number where the document begins]. | 52.2020(d)(1)(h). |
| Bollman Hat Company | 36–2031 | Lancaster | 7/3/95 | 3/29/05, [Insert page number where the document begins]. | 52.2020(d)(1)(h). |
| Armco Inc | OP 43–040 | Mercer | 9/30/99 | 3/29/05, [Insert page number where the document begins]. | 52.2020(d)(1)(h). |
| Specialty Tires of America, Inc | 32–000–065 | Indiana | 1/6/00 | 3/29/05, [Insert page number where the document begins]. | 52.2020(d)(1)(h). |
| Truck Accessories Group East | OP–49–0005 | Northumberland | 3/26/99 | 3/29/05, [Insert page number where the document begins]. | 52.2020(d)(1)(h). |
| Jeraco Enterprises, Inc | OP–49–0014 | Northumberland | 4/6/97 | 3/29/05, [Insert page number where the document begins]. | 52.2020(d)(1)(h). |
| Insulation Corporation of America | 39–0012 | Lehigh | 10/17/95 | 3/29/05, [Insert page number where the document begins]. | 52.2020(d)(1)(h). |
| Pope & Talbot, Inc | 40–0019 | Luzerne | 5/31/96 | 3/29/05, [Insert page number where the document begins]. | 52.2020(d)(1)(h). |
| Universal Rundle Corporation | OP 37–059 | Lawrence | 5/31/95 | 3/29/05, [Insert page number where the document begins]. | 52.2020(d)(1)(h). |
| Clark Filter | 36–02040 | Lancaster | 2/4/00 | 3/29/05, [Insert page number where the document begins]. | 52.2020(d)(1)(h). |

* * * * *

[FR Doc. 05–6199 Filed 3–28–05; 8:45 am]

BILLING CODE 6560–50–P

## DEPARTMENT OF THE INTERIOR

### Bureau of Reclamation

### 43 CFR Part 423

**RIN 1006–AA49**

## Public Conduct on Reclamation Lands and Projects; Extension of Expiration Date

**AGENCY:** Bureau of Reclamation, Interior.

**ACTION:** Final rule.

**SUMMARY:** In 2002 the Bureau of Reclamation published a final rule governing public conduct on Bureau of Reclamation Lands (the 2002 rule). The 2002 rule will expire on April 17, 2005. We are developing a new rule to replace the 2002 rule, but the new rule will not be finalized by April 17. This rule extends the effective date of the 2002 rule to allow us time to develop and publish the new rule.

**DATES:** The extension of the expiration date of 43 CFR part 423, Public Conduct on Bureau of Reclamation Lands and Projects, from April 17, 2005, to April 17, 2006, is effective on March 29, 2005.

**ADDRESSES:** Address any questions concerning this rule to Larry Todd, Director, Security, Safety, and Law Enforcement, Bureau of Reclamation, 6th and Kipling, Building 67, P.O. Box 25007, Denver, Co. 80225.

**FOR FURTHER INFORMATION CONTACT:** Gary Anderson, (303) 445–2891.

**SUPPLEMENTARY INFORMATION:**

### I. Background

On September 11, 2001, terrorists launched attacks on targets within the United States. Following the terrorist attacks, on November 12, 2001, Congress enacted Public Law 107–69 (now codified at 43 U.S.C. 373b and 373c), to provide law enforcement authority within Reclamation projects and on Reclamation lands. Section 1(a) of Public Law 107–69 requires Reclamation to ''issue regulations necessary to maintain law and order and protect persons and property within Reclamation projects and on Reclamation lands.'' Pursuant to that statutory requirement, Reclamation issued a final rule, 43 CFR Part 423, Public Conduct on Reclamation Lands and Projects, on April 17, 2002 (now codified at 43 CFR 423.1–10). That rule's preamble set the rule to expire on April 17, 2003, based on Reclamation's intent to develop a more comprehensive public conduct rule by that date. On April 3, 2003, Reclamation extended that expiration date to April 17, 2005.

A more comprehensive rule is currently under development, but additional time is needed to complete that rulemaking. In order to avoid a time period during which no rule is in place addressing public conduct on our lands and facilities, Reclamation has decided to extend the expiration date of the existing rule from April 17, 2005, to April 17, 2006.

### II. Procedural Requirements

*A. Determination To Issue Final Rule Without Notice and Comment*

The Administrative Procedure Act (APA) generally requires agencies to provide advance notice and an opportunity to comment on agency rulemakings. However, the APA allows an agency to promulgate rules without notice and comment when an agency, for good cause, finds that notice and public comment are ''impracticable, unnecessary, or contrary to the public interest.'' (5 U.S.C. 553(b)(3)(B)). To the extent that 5 U.S.C. 553 applies to the rule, good cause exists to exempt this rulemaking from advance notice and comment.

Allowing a period for advance notice could result in the expiration of the existing rule before this rule, which extends the expiration date, goes into effect. A period without a rule in place addressing public conduct on Reclamation lands and projects would result in a serious disruption in the protection of Reclamation facilities and property, with accompanying confusion to employees and the public. Such disruption and confusion would be contrary to public and national security interests.

We expect to issue a comprehensive rule that would supersede the existing rule in the near future. Establishing a public comment period for the extension of the existing rule's expiration date is likely to create significant public confusion in that such a comment period might closely coincide with the comment period on the proposed comprehensive rule.

Finally, the existing rule which was issued on April 17, 2002, generated virtually no public reaction. Despite our request for comments on the rule, we received only one nonsubstantive comment. Therefore, it is not reasonable to expect that mere extension of the rule's expiration date would result in substantive comments from the public.

For the foregoing reasons, we conclude it is impracticable, unnecessary, and contrary to the public interest to request public comment on this rule.

*B. Determination To Make Rule Effective Immediately*

A period without a rule in place addressing public conduct on Reclamation lands and projects would result in a serious disruption in the protection of Reclamation facilities and property, with accompanying confusion to employees and the public. This disruption and confusion would be contrary to public and national security interests. For these reasons, the Bureau of Reclamation has determined it appropriate to waive the requirement of publication 30 days in advance of the effective date. As allowed by 5 U.S.C. 553(d)(3), this rule is effective immediately because it is in the public interest not to delay implementation of this amendment.

*C. Review Under Procedural Statutes and Executive Orders*

We have reviewed this final rule under the following statutes and executive orders governing rulemaking procedures: The Unfunded Mandates Reform Act of 1995, 2 U.S.C. 1501 *et seq.*; the Regulatory Flexibility Act, 5 U.S.C. 601 *et seq.*; the Small Business Regulatory Enforcement Fairness Act of 1996, 5 U.S.C. 801 *et seq.*; the National Environmental Policy Act of 1969, 42 U.S.C. 4321 *et seq.*; the Paperwork Reduction Act, 44 U.S.C. 3501 *et seq.*; Executive Order 12630 (Takings); Executive Order 12866 (Regulatory Planning and Review); Executive Order 12988 (Civil Justice Reform); Executive Order 13132 (Federalism); Executive Order 13175 (Tribal Consultation); and Executive Order 13211 (Energy Impacts). We have determined that this rule does not trigger any of the procedural requirements of those statutes and executive orders because it merely extends the expiration date of the existing rule.

**List of Subjects in 43 CFR Part 423**

Law enforcement, Penalties, Public lands.

For the reasons set forth in the preamble, the Bureau of Reclamation extends the expiration date of 43 CFR part 423 from April 17, 2005, to April 17, 2006.

Dated: February 25, 2005.

**R. Thomas Weimer,**

*Acting Assistant Secretary—Water and Science.*

[FR Doc. 05–6190 Filed 3–28–05; 8:45 am]

BILLING CODE 4310–MN–P

## DEPARTMENT OF HOMELAND SECURITY

## Coast Guard

## 46 CFR Part 401

**[USCG–2002–11288]**

**RIN 1625–AA38 [Formerly RIN 2115–AG30]**

## Rates for Pilotage on the Great Lakes

**AGENCY:** Coast Guard, Department of Homeland Security.

**ACTION:** Interim rule; correction.

**SUMMARY:** This document contains corrections to the interim rule published in the **Federal Register** on March 10, 2005. The interim rule establishes new rates for pilotage on the Great Lakes.

**DATES:** Effective on March 29, 2005.

**FOR FURTHER INFORMATION CONTACT:** For questions on this correction document, call or e-mail Paul Wasserman, Director, Office of Great Lakes Pilotage (G–MW–1), U.S. Coast Guard, at telephone 202–267–2856, or *pwasserman@comdt.uscg.mil.*

**SUPPLEMENTARY INFORMATION:**

### Need for Correction

The interim rule, as published, contained incorrect column headings in two tables and an incorrect date. These errors could confuse the reader and need to be corrected.

### Correction of Publication

■ Accordingly, the publication on March 10, 2005, of the interim rule [USCG–2002–11288], FR Doc. 05–4586, is corrected as follows:

■ 1. On page 12097, in the table entitled ''District Three—Projected Rate of Return on Investment'', change the column heading ''Total district'' to read ''Total district three''.

■ 2. On page 12098, in the table entitled ''District Three—Adjustment Determination'', change the column heading ''Total district'' to read ''Total district three''.

■ 3. On page 12100, in column one, in line 16 under ''Regulatory Evaluation'', change the words ''March 1, 2005'' to read ''April 11, 2005''.

Dated: March 21, 2005.

**S.G. Venckus,**

*Chief, Regulations and Administrative Law, United States Coast Guard, DHS.*

[FR Doc. 05–6139 Filed 3–28–05; 8:45 am]

BILLING CODE 4910–15–P

## GENERAL SERVICES ADMINISTRATION

## 48 CFR Part 501

**[GSAR Amendment 2005–01; GSAR Case 2004–G508 (Change 14)]**

**RIN 3090–AI07**

## General Services Administration Acquisition Regulation; Deviations

**AGENCIES:** General Services Administration (GSA), Office of the Chief Acquisition Officer.

**ACTION:** Final rule.

**SUMMARY:** The General Services Administration (GSA) is amending the General Services Administration Acquisition Regulation (GSAR) by issuing a final rule to modify existing policy on obtaining deviations from both the Federal Acquisition Regulation (FAR) and GSAR. This final rule will include revised procedures for obtaining deviations and will clarify the term ''class deviation,'' and add clarification regarding the term ''contract action''.

**DATES:** *Effective Date*: March 29, 2005.

**FOR FURTHER INFORMATION CONTACT** The Regulatory Secretariat (VIR), Room 4035, GS Building, Washington, DC, 20405, (202) 501–4755, for information pertaining to status or publication schedules. For clarification of content, contact Mr. Ernest Woodson, Procurement Analyst, at (202) 501–3775. Please cite Amendment 2005–01, GSAR case 2004–G508 (Change 14).

**SUPPLEMENTARY INFORMATION:**

### A. Background

The FAR prescribes policies and procedures for authorizing deviations from the FAR when necessary to meet the specific needs and requirements of an agency unless precluded by law, executive order, or regulation. FAR 1.402 provides that the development and testing of new techniques and methods of acquisition should not be stifled simply because such actions would require a FAR deviation. However, deviations to the FAR and the GSAR have raised questions indicating the need to increase the involvement of the Office of the Chief Acquisition Officer. Therefore, this final rule modifies GSAR 501.403 and 501.404 to include revised procedures for obtaining deviations and clarify the term ''class deviation,'' and adds GSAR 501.404–70 to clarify the term ''contract action.''

This is not a significant regulatory action and, therefore, was not subject to review under Section 6(b) of Executive Order 12866, Regulatory Planning and Review, dated September 30, 1993. This rule is not a major rule under 5 U.S.C. 804.

### B. Regulatory Flexibility Act

The Regulatory Flexibility Act does not apply to this rule. This final rule does not constitute a significant FAR revision within the meaning of FAR 1.501 and Public Law 98–577, and publication for public comments is not required. However, GSA will consider comments from small entities concerning the affected GSAR Subpart 501.4 in accordance with 5 USC. 610. Interested must parties must submit such comments separately and should cite 5 U.S.C. 601, et. seq. (GSAR case 2004–G508), in correspondence.

### C. Paperwork Reduction Act

The Paperwork Reduction Act does not apply because the changes to the GSAR do not impose recordkeeping or information collection requirements, or otherwise collect information from offerors, contractors, or members of the public that require approval of the Office of Management and Budget under 44 U.S.C.3501, *et seq.*

### List of Subjects in 48 CFR Part 501

Government procurement.

Dated: March 22, 2005.

**David A. Drabkin,**

*Senior Procurement Executive, Office of the Chief Acquisition Officer, General Services Administration.*

■ Therefore, GSA amends 48 CFR part 501 as set forth below:

## PART 501—GENERAL SERVICES ADMINISTRATION ACQUISITION REGULATION SYSTEM

■ 1. The authority citation for 48 CFR part 501 is revised to read as follows:

**Authority:** 40 U.S.C. 121(c).

■ 2. Amend section 501.403 by revising paragraphs (a) and (c) to read as follows:

**501.403 Individual deviations.**

(a) An individual deviation affects only one contract action.

(1) The Head of the Contracting Activity (HCA) must approve an individual deviation to the FAR. The authority to grant an individual deviation may not be re-delegated. A copy of the deviation must be provided to GSA's Senior Procurement Executive (SPE).

(2) An individual deviation to the GSAR must be approved by the HCA. The authority to grant an individual deviation may be re-delegated to the Contracting Director.

* * * * *

(c) Send a copy of each deviation to GSA's SPE (V).

■ 3. Amend section 501.404 by revising paragraphs (a), (c), and (e)(2) to read as follows:

**501.404 Class deviations.**

(a) A class deviation affects more than one contract action. A deviation for any solicitation that will result in multiple awards or any solicitation under the multiple award Federal Supply Schedule program is considered to be a class deviation. Each award under such a solicitation is considered an individual contract action.

(1) A class deviation to the FAR must be forwarded by the cognizant HCA to GSA's SPE for approval. Prior to approving a class deviation to the FAR, the SPE will consult with the Chairman of the Civilian Agency Acquisition Council (CAAC) in accordance with FAR 1.404(a)(1).

(2) A class deviation to the GSAR must be forwarded by the cognizant HCA to GSA's SPE for approval.

(3) When an HCA knows that a proposed class deviation will be required on a permanent basis, the HCA should propose or recommend an appropriate FAR and/or GSAR revision.

* * * * *

(c) Send a copy of each deviation to GSA's SPE (V).

* * * * *

(e) * * *

(2) May be rescinded earlier by GSA's SPE or by officials designated under paragraph (a) of this section without prejudice to any action taken previously.

■ 4. Add sections 501.404–70 and 501.404–71 to read as follows:

**501.404–70 Contract action.**

*Contract action.* A contract action, for the purpose of determining whether an individual or class deviation is appropriate, has the same meaning as that used for reporting contract actions to Federal Procurement Data System—Next Generation (FPDS-NG). A contract action includes, but is not limited to, any of the following:

(a) Initial letter contract.

(b) Definitive contract superseding letter contract.

(c) New definitive contract.

(d) Purchase order/BPA calls using simplified acquisition procedures.

(e) Orders under single award indefinite delivery contracts.

(f) Orders under BOA.

(g) Order/modification under Federal schedule contract.

(h) Modification.

(i) Termination for Default.

(j) Termination for Convenience.

(k) Order under multiple award contract.

(l) Initial load of Federal schedule contract.

**501.404–71 Deviations to the nonregulatory GSAM.**

Handle individual and class deviations to the nonregulatory (unshaded) part of the GSAM as stated in 501.403 and 501.404.

[FR Doc. 05–6186 Filed 3–28–05; 8:45 am]

BILLING CODE 6820–61–S

## DEPARTMENT OF THE INTERIOR

## Fish and Wildlife Service

## 50 CFR Part 17

**RIN 1018–AE04**

## Endangered and Threatened Wildlife and Plants; Reclassification of Certain Vicuña Populations From Endangered to Threatened With a Special Rule; Technical Amendment

**AGENCY:** Fish and Wildlife Service, Interior.

**ACTION:** Final rule; technical amendment.

**SUMMARY:** This document amends the special rule for the vicuña (*Vicugna vicugna*), as published in the **Federal Register** on May 30, 2002. The May 30, 2002, special rule allows the importation into the United States of legal fiber and legal products produced with fiber from vicuña populations listed as threatened under the U.S. Endangered Species Act of 1973 (ESA) and in Appendix II of the Convention on International Trade in Endangered Species of Wild Fauna and Flora (CITES), if certain conditions are satisfied by the countries of origin and re-export. This document: (1) Corrects and clarifies the labeling requirements for legal vicuña fiber and fiber products; and (2) corrects an inadvertent typographical error in the section on annual reporting requirements.

**DATES:** This amendment to the special rule for vicuña is effective on March 29, 2005.

**FOR FURTHER INFORMATION CONTACT:** Mr. Robert R. Gabel, Chief, Division of Scientific Authority, U.S. Fish and Wildlife Service, 18th and C Streets, NW., Mail Stop ARLSQ–750, Washington, DC 20240; phone: 703–358–1708; fax: 703–358–2276; e-mail: *scientificauthority@fws.gov.*

**SUPPLEMENTARY INFORMATION:**

### Background

On May 30, 2002, the U.S. Fish and Wildlife Service (Service), published a final rule (67 FR 37695) reclassifying the vicuña (*Vicugna vicugna*) in Argentina, Bolivia, Chile, and Peru from endangered to threatened under the ESA. The final rule also established a special rule (under section 4(d) of the ESA) allowing the importation into the United States of legal fiber and legal products produced with fiber from vicuña populations listed as threatened under the Act and in Appendix II of CITES, if certain conditions are satisfied by the exporting (range) or re-exporting country. This special rule is contained in 50 CFR 17.40(m).

The special rule contains errors in two paragraphs: (1) Paragraph (m)(2)(i)(A) on labeling requirements for legal vicuña fiber and fiber products; and (2) paragraph (m)(4)(i) on annual reporting requirements. With this technical amendment, we are correcting existing errors, as well as making changes to these paragraphs to clarify language that has been identified as unclear.

Paragraph (m)(2)(i)(A) addresses labeling requirements for legal vicuña fiber and fiber products. The special rule is perhaps not explicit enough in explaining that labeling requirements pertain to all imports, exports, and re-exports. We are amending paragraph (m)(2)(i)(A) to explicitly state that labeling requirements pertain to all imports, exports, and re-exports, including raw fiber re-exported from, or products manufactured in, intermediary countries.

Paragraph (m)(2)(i)(A)(*1*) specifies that cloth and cloth products must bear the logo adopted by countries signatory to the ''Convenio para la Conservación y Manejo de la Vicuña,'' and the words ''VICUÑA–(Country of Origin)'' (where country of origin is the name of the original exporting country where the vicuña fiber in the products originated, either Argentina, Bolivia, or Chile) or ''VICUÑA–PERU–ARTESANIA'' (for Peru only). However, the words ''VICUÑA–PERU–ARTESANIA'' have never been used to label cloth and cloth products from Peru. Peru uses the words ''VICUÑA–PERU'' for these products. We are amending paragraph (m)(2)(i)(A)(*1*) to reflect that only the words ''VICUÑA–(Country of Origin)'' are used for cloth and cloth products.

In addition, paragraph (m)(2)(i)(A)(*1*) does not specify how the logo and

words must appear on the cloth or cloth product. We are amending paragraph (m)(2)(i)(A)(*1*) to clarify that the logo and words may be stitched into the cloth or may appear on a sewn-in label.

Finally, paragraph (m)(2)(i)(A)(*1*) does not explicitly state that the labeling requirement also pertains to samples of cloth or samples of cloth products, as well as to other manufactured goods not specifically covered in subsequent paragraphs. We are amending paragraph (m)(2)(i)(A)(*1*) to clarify that samples and other manufactured goods can be imported only if they meet the same requirements as cloth and cloth products.

Paragraph (m)(2)(i)(A)(*2*) describes the labeling requirements for finished vicuña products (including luxury handicrafts and knitted articles) and any bulk shipments of raw fiber. It specifies that finished vicuña products (including luxury handicrafts and knitted articles) and any bulk shipments of raw fiber must ''have a seal or identification tag with codes describing the origin of the vicuña product, the trademark or label (''VICUÑA–(Country of Origin)'' (where country of origin is the name of the original exporting country where the vicuña fiber in the products originated, either Argentina, Bolivia, or Chile) or ''VICUÑA–PERU–ARTESANIA'' (for Peru only), and the CITES export permit number, where country of origin is the name of the original exporting country where the vicuña fiber in the products originated.'' However, as a result of a proposal adopted at the 10th Meeting of the Conference of the Parties to CITES, luxury handicrafts and knitted articles produced by native craftpersons within the country of origin should bear the label ''VICUÑA–(Country of Origin)–ARTESANIA.'' This label does not apply to all finished vicuña products, but only to luxury handicrafts and knitted articles made by native craftpersons in the country of origin. In addition, these products must have the logo adopted by countries signatory to the ''Convenio para la Conservación y Manejo de la Vicuña.'' We are amending paragraph (m)(2)(i)(A)(*2*) to reflect that only luxury handicrafts and knitted articles made in the country of origin can have the label ''VICUÑA–(Country of Origin)–ARTESANIA,'' and that these articles must also have the logo adopted by countries signatory to the ''Convenio para la Conservación y Manejo de la Vicuña.'' We are also amending paragraph (m)(2)(i)(A)(*2*) to clarify that the logo and words may be woven into the item or may appear on a sewn-in label.

In addition, paragraph (m)(2)(i)(A)(*2*) states that the shipment must have a seal or identification tag with codes describing the origin of the vicuña product and the CITES export permit number. It is not clear that this requirement pertains only to bulk shipments of raw fiber. We are amending the special rule, specifically by adding a new paragraph (m)(2)(i)(A)(*3*), to clarify that only bulk fiber shipments are subject to this requirement and to clarify the labeling information that is being required.

Paragraph (m)(4)(i) of the special rule describes the annual reporting requirement for range country governments wishing to export specimens of vicuña to the United States. In the list of types of information required in the annual report, we inadvertently labeled two paragraphs with the letter (E). Through this document, we are correcting the text in 50 CFR 17.40(m), paragraph (4)(i), to eliminate the duplicate (E) and to label each subparagraph in correct alphabetical order.

We are making no further amendments to the May 30, 2002, final rule.

**Required Determinations**

We have reviewed this rule under the following statutes and Executive Orders that govern the rulemaking process: Executive Order 12866 (Regulatory Planning and Review); Regulatory Flexibility Act (5 U.S.C. 601 *et seq.*); Small Business Regulatory Enforcement Fairness Act (5 U.S.C. 804(2)); Unfunded Mandates Reform Act (2 U.S.C. 1501 *et seq.*); Executive Order 12630 (Takings); Executive Order 13132 (Federalism); Executive Order 12988 (Civil Justice Reform); Paperwork Reduction Act of 1995 (44 U.S.C. 3501 *et seq.*); National Environmental Policy Act; Executive Order 13175 (Tribal Consultation) and 512 DM 2 (Government-to-Government Relationship With Tribes); and Executive Order 13211 (Energy Supply, Distribution, or Use). We have determined that this rule does not trigger any of the procedural requirements of these Executive Orders or statutes since this rule is only making technical corrections to the May 30, 2002, special rule.

We, for good cause, have determined that the public notice and comment provisions of the Administrative Procedure Act (APA) (5 U.S.C. 553(b)(3)(B)) are unnecessary for this rule because it is only making technical corrections to the May 30, 2002, special rule. Further delaying the correction of this rule by engaging in normal public procedure would be contrary to the public interest.

Under the APA, our normal practice is to publish rules with a 30-day delay in effective date. But in this case, we are using the ''good cause'' exemption under 5 U.S.C. 553(d)(3) to make this rule effective upon publication because it is only making technical corrections to the May 30, 2002, special rule and for the reason just stated above.

**List of Subjects in 50 CFR Part 17**

Endangered and threatened species, Exports, Imports, Reporting and recordkeeping requirements, Transportation.

**Regulations Promulgation**

■ Accordingly, the Service hereby amends § 17.40 by revising paragraph (m) to read as follows:

## PART 17—[AMENDED]

■ 1. The authority citation for part 17 continues to read as follows:

**Authority:** 16 U.S.C. 1361–1407; 16 U.S.C. 1531–1544; 16 U.S.C. 4201–4245; Pub. L. 99–625, 100 Stat. 3500; unless otherwise noted.

■ 2. Amend §17.40 as follows:

■ a. Revise paragraph (m)(2)(i)(A) to read as follows; and

■ b. Redesignate the second paragraph (m)(4)(i)(E) and paragraphs (m)(4)(i)(F), (G), and (H) as paragraphs (m)(4)(i)(F), (G), (H) and (I), respectively.

**§ 17.40 Special rules—mammals.**

* * * * *

(m) * * *

(2) * * *

(i) * * *

(A) The vicuña product must comply with all CITES product annotations as given in the CITES Secretariat's official list of the CITES Appendices, and all imports, exports, and re-exports of vicuña products (including raw fiber re-exported from, or products manufactured in, intermediary countries) must be identified as follows:

(*1*) *Cloth, cloth products, and other finished products (including luxury handicrafts and knitted articles not produced in the country of origin):* The reverse side of cloth, cloth products, and other finished products (including luxury handicrafts and knitted articles not produced in the country of origin), and samples of any of these items, must bear the logo adopted by countries signatory to the ''Convenio para la Conservación y Manejo de la Vicuña'' and the words ''VICUÑA—(Country of Origin),'' where country of origin is the name of the country where the vicuña fiber in the products originated, either Argentina, Bolivia, Chile, or Peru. The logo and words may be woven into the

item, or may be on a label sewn into the item.

(*2*) *Luxury handicrafts and knitted articles produced in the country of origin:* The luxury handicraft or knitted article must bear the logo adopted by countries signatory to the ''Convenio para la Conservación y Manejo de la Vicuña'' and the words ''VICUÑA—(Country of Origin)—ARTESANIA,'' where country of origin is the name of the country where the vicuña fiber in the products, and the products themselves, originated, either Argentina, Bolivia, Chile, or Peru. The logo and words may be woven into the item, or may be on a label sewn into the item.

(*3*) *Bulk shipments of raw fiber:* The bulk shipment of raw fiber must be sealed with a tamper-proof seal and have the following:

(*i*) An identification tag with a code identifying the country of origin of the vicuña fiber and the CITES export permit number; and

(*ii*) The logo adopted by countries signatory to the ''Convenio para la Conservación y Manejo de la Vicuña'' and the words ''VICUÑA—(Country of Origin),'' where country of origin is the name of the original exporting country where the vicuña fiber in the products originated, either Argentina, Bolivia, Chile, or Peru.

* * * * *

Dated: March 17, 2005.

**Craig Manson,**

*Assistant Secretary for Fish and Wildlife and Parks.*

[FR Doc. 05–6152 Filed 3–28–05; 8:45 am]

**BILLING CODE 4310–55–P**

---

## DEPARTMENT OF COMMERCE

## National Oceanic and Atmospheric Administration

## 50 CFR Part 679

**[Docket No. 041126332–5039–02; I.D. 032305B]**

## Fisheries of the Exclusive Economic Zone Off Alaska; Pacific Cod by Catcher Vessels Using Trawl Gear in the Bering Sea and Aleutian Islands Management Area

**AGENCY:** National Marine Fisheries Service (NMFS), National Oceanic and Atmospheric Administration (NOAA), Commerce.

**ACTION:** Modification of a closure.

**SUMMARY:** NMFS is reopening directed fishing for Pacific cod by catcher vessels using trawl gear in the Bering Sea and Aleutian Islands management area (BSAI). This action is necessary to utilize the remaining amount of the 2005 first seasonal allowance of the Pacific cod total allowable catch (TAC) specified for catcher vessels using trawl gear in the BSAI.

**DATES:** Effective 1200 hrs, Alaska local time (A.l.t.), March 29, 2005, through 1200 hrs, A.l.t., April 1, 2005.

**FOR FURTHER INFORMATION CONTACT:** Josh Keaton, 907–586–7228.

**SUPPLEMENTARY INFORMATION:** NMFS manages the groundfish fishery in the BSAI according to the Fishery Management Plan for Groundfish of the Bering Sea and Aleutian Islands Management Area (FMP) prepared by the North Pacific Fishery Management Council under authority of the Magnuson-Stevens Fishery Conservation and Management Act. Regulations governing fishing by U.S. vessels in accordance with the FMP appear at subpart H of 50 CFR part 600 and 50 CFR part 679.

The 2005 first seasonal allowance of the Pacific cod TAC specified for catcher vessels using trawl gear in the BSAI is 31,345 metric tons (mt) as established by the 2005 and 2006 final harvest specifications for groundfish in the BSAI (70 FR 8979, February 24, 2005), for the period 1200 hrs, A.l.t., January 1, 2005, through 1200 hrs, A.l.t., April 1, 2005. See §§ 679.20(c)(3)(iii), (c)(5), and (a)(7)(i)(B). In accordance with § 679.20(d)(1)(iii), the directed fishery for Pacific cod by catcher vessels using trawl gear was closed effective 1200 hrs, A.l.t., March 13, 2005 (70 FR 12811, March 16, 2005), because it was determined that the 2005 first seasonal allowance of the Pacific cod TAC specified for catcher vessels using trawl gear in the BSAI had been caught.

NMFS has determined that as of March 18, 2005, the remaining amount of the 2005 first seasonal allowance of the Pacific cod TAC specified for catcher vessels using trawl gear in the BSAI is 2,400 metric tons. Therefore, in accordance with §§ 679.25(a)(1)(i), (a)(2)(i)(C) and 679.25(a)(2)(iii)(D), NMFS is terminating the previous closure and is reopening directed fishing for Pacific cod by catcher vessels using trawl gear in the BSAI effective 1200 hrs, A.l.t., March 29, 2005.

### Classification

This action responds to the best available information recently obtained from the fishery. The Assistant Administrator for Fisheries, NOAA (AA), finds good cause to waive the requirement to provide prior notice and opportunity for public comment pursuant to the authority set forth at 5 U.S.C. 553(b)(B) as such requirement is impracticable and contrary to the public interest. This requirement is impracticable and contrary to the public interest as it would prevent NMFS from responding to the most recent fisheries data in a timely fashion and would delay the reopening of the fishery for the remaining 2005 first seasonal allowance of the Pacific cod TAC specified for catcher vessels using trawl gear in the BSAI

The AA also finds good cause to waive the 30-day delay in the effective date of this action under 5 U.S.C. 553(d)(3). This finding is based upon the reasons provided above for waiver of prior notice and opportunity for public comment.

This action is required by § 679.20 and is exempt from review under Executive Order 12866.

**Authority:** 16 U.S.C. 1801 *et seq.*

Dated: March 23, 2005.

**Alan D. Risenhoover,**

*Acting Director, Office of Sustainable Fisheries, National Marine Fisheries Service.*

[FR Doc. 05–6184 Filed 3–24–05; 4:30 pm]

**BILLING CODE 3510–22–S**

# Proposed Rules

Federal Register
Vol. 70, No. 59
Tuesday, March 29, 2005

This section of the FEDERAL REGISTER contains notices to the public of the proposed issuance of rules and regulations. The purpose of these notices is to give interested persons an opportunity to participate in the rule making prior to the adoption of the final rules.

## OFFICE OF PERSONNEL MANAGEMENT

### 5 CFR Part 950

**RIN 3206–AK71**

### Solicitation of Federal Civilian and Uniformed Service Personnel for Contributions to Private Voluntary Organizations—Sanctions Compliance Certification

**AGENCY:** Office of Personnel Management.

**ACTION:** Proposed rule.

**SUMMARY:** The Office of Personnel Management (OPM) is issuing a proposed regulation for the Combined Federal Campaign (CFC). This regulation requires that each federation and unaffiliated organization applying to participate in the CFC must, as a condition of participation, certify that it is in compliance with all statutes, Executive orders, and regulations restricting or prohibiting U.S. persons from engaging in transactions and dealings with countries, entities, and individuals subject to economic sanctions administered by the U.S. Department of the Treasury's Office of Foreign Assets Control (OFAC).

**DATES:** We will consider comments received within 60 days from the date of publication in the **Federal Register.**

**ADDRESSES:** You may submit comments, identified by RIN number, by any of the following methods:

- Federal eRulemaking Portal: *http://www.regulations.gov.* Follow the instructions for submitting comments.
- E-mail: *cfc@opm.gov.* Include ''RIN 3206–AK71'' in the subject line of the message.
- Fax: (202) 606–0902.
- Mail: Mara T. Patermaster, Director for, U.S. Office of Personnel Management, Office of CFC Operations, Room 5450, 1900 E Street, NW., Washington, DC 20415.
- Hand Delivery/Courier: Mara T. Patermaster, Director for, U.S. Office of Personnel Management, Office of CFC Operations, Room 5450, 1900 E Street, NW., Washington, DC 20415.

**FOR FURTHER INFORMATION CONTACT:** Mark W. Lambert, Senior Compliance Officer for the Office of CFC Operations, by telephone on (202) 606–2564, by FAX on (202) 606–0902, or by e-mail at *cfc@opm.gov.*

**SUPPLEMENTARY INFORMATION:** OFAC is the office principally responsible for administering and enforcing U.S. economic sanctions programs. These programs further U.S. foreign policy and national security goals and are primarily directed against foreign states and nationals, including sponsors of global terrorism and foreign narcotics traffickers. OFAC acts, pursuant to delegated authority, under Presidential wartime and peacetime national emergency powers. The programs administered by OFAC restrict or prohibit U.S. persons from engaging in transactions and dealings with targeted countries, entities, and individuals. OFAC publishes a list of Specially Designated Nationals and Blocked Persons (SDN List) that are subject to economic sanctions. The SDN List and additional information relating to the countries subject to sanctions and the programs OFAC administers are available at *http://www.treas.gov/offices/enforcement/ofac/sanctions/.* A link to this Web site can be accessed through the CFC Web site (*http://www.opm.gov/cfc*).

OPM is issuing a proposed regulation governing the solicitation of Federal civilian and uniformed services personnel at the workplace for contributions to private non-profit organizations through the CFC under the authority of Executive Order 12353 (March 23, 1982). OPM has plenary authority under 5 CFR part 950 to administer the CFC in compliance with legal standards.

A pattern of abuse of U.S. and foreign charities has become evident in recent years. Between October 2001 and December 2004, the United States has: (i) Imposed sanctions against five U.S.-based charities and thirty-five non-U.S. charities for terrorist financing activity under the authority of Executive Order 13224 (Sept. 23, 2001) and the International Emergency Economic Powers Act, 50 U.S.C. 1701, *et seq.*; (ii) convicted and sentenced the leader of a U.S.-based charity for racketeering and fraud owing to terrorist-related support; (iii) indicted another U.S.-based charity and its leadership under pending terrorist financing charges, and (iv) investigated numerous other charities operating in the U.S. and suspected of terrorist financing activity. These cases demonstrate the vulnerability of the charitable sector to abuse by terrorists and others and also underscore the importance of due diligence within the charitable sector.

Accordingly, in order to further the purposes of the economic sanctions imposed by the President, to ensure that CFC participants are exercising appropriate diligence, and to help safeguard the integrity of the CFC and the interests of Federal employees who contribute to the Campaign, the proposed regulation requires that each federation and unaffiliated organization applying to participate in the CFC must, as a condition of participation, certify that it is in compliance with all statutes, Executive orders, and regulations restricting or prohibiting U.S. persons from engaging in transactions and dealings with countries, entities, and individuals subject to economic sanctions administered by OFAC. The certification proposed for comment for the 2006 and subsequent Campaigns reads as follows:

*I certify that the organization named in this application is in compliance with all statutes, Executive orders, and regulations restricting or prohibiting U.S. persons from engaging in transactions and dealings with countries, entities, or individuals subject to economic sanctions administered by the U.S. Department of the Treasury's Office of Foreign Assets Control. The organization named in this application is aware that a list of countries subject to such sanctions, a list of Specially Designated Nationals and Blocked Persons subject to such sanctions, and overviews and guidelines for each such sanction program can be found at http://www.treas.gov/offices/enforcement/ofac/sanctions/. If the organization named in this application becomes noncompliant at any time subsequent to completing this certification, it will notify the OPM Office of CFC Operations immediately.*

In an effort to develop a certification that both serves the public interest and meets the needs of the stakeholder community, including CFC charitable organization applicants and Federal donors, comment is now being solicited for consideration prior to the 2006 CFC and subsequent Campaigns.

Comment is invited on what issues, if any, are presented by the approach

proposed by OPM for the 2006 and subsequent Campaigns in light of certifications currently required by other agencies for different programs. In particular, the U.S. Agency for International Development requires grantees to make a certification (available under keyword ''Anti-Terrorism Certification'' at *http://www.usaid.gov/keywords.html*). Comments from recipients of funding from USAID who also participate in the Combined Federal Campaign are especially urged to comment on the appropriateness of different certification requirements.

**Regulatory Flexibility Act**

I certify that this regulation will not have a significant economic impact on a substantial number of small entities. Organizations applying to the CFC have an existing, independent obligation to comply with U.S. sanctions laws. Requiring them to execute a certification with respect to such compliance is not burdensome. OPM has taken steps to minimize the economic impact on small entities by including in the text of the certification the OFAC Web site address at which extensive information on U.S. sanctions is available via the Internet free of charge, including the text-searchable OFAC SDN List.

**Executive Order 12866, Regulatory Review**

This rule has been reviewed by the Office of Management and Budget in accordance with Executive Order 12866.

**List of Subjects in 5 CFR Part 950**

Administrative practice and procedures, Charitable contributions, Government employees, Military personnel, Nonprofit organizations and Reporting and recordkeeping requirements.

Office of Personnel Management.

**Dan G. Blair,**

*Acting Director.*

Accordingly, OPM is proposing to amend 5 CFR part 950 as follows:

## PART 950—SOLICITATION OF FEDERAL CIVILIAN AND UNIFORMED SERVICE PERSONNEL FOR CONTRIBUTIONS TO PRIVATE VOLUNTARY ORGANIZATIONS

1. The authority citation for part 950 continues to read as follows:

**Authority:** E.O. 12353 (March 23, 1982), 47 FR 12785 (March 25, 1982). 3 CFR, 1982 Comp., p. 139. E.O. 12404 (February 10, 1983), 48 FR 6685 (February 15, 1983), Pub. L. 100–202, and Pub. L. 102–393 (5 U.S.C. 1101 Note).

**§ 950.104 Local Federal Coordinating Committee Responsibilities.**

2. In subpart A § 950.104 add paragraph (b)(18) to read as follows:

* * * * *

(b) * * *

(18) Determining whether each local organization that applies to participate in the local campaign has completed the sanctions compliance certification required pursuant to § 950.605. The LFCC must deny participation to any organization that has not completed the sanctions compliance certification.

3. In subpart F, add new § 950.605 to read as follows:

**§ 950.605 Sanctions Compliance Certification.**

Each federation and unaffiliated organization applying for participation in the CFC must, as a condition of participation, complete a certification that it is in compliance with all statutes, Executive orders, and regulations restricting or prohibiting U.S. persons from engaging in transactions and dealings with persons subject to economic sanctions administered by the U.S. Department of the Treasury's Office of Foreign Assets Control (OFAC). An organization that is not in compliance at any time subsequent to completing this certification must notify the OPM Office of CFC Operations immediately. OPM will take such steps as it deems appropriate under the circumstances, including, but not limited to, notifying OFAC and/or other enforcement authorities of such noncompliance, suspending disbursement of CFC funds not yet disbursed, retracting (to the extent practicable) CFC funds already disbursed, and suspending or expelling the organization from the CFC.

[FR Doc. 05–6023 Filed 3–28–05; 8:45 am]

BILLING CODE 6325–46–P

## DEPARTMENT OF TRANSPORTATION

### Federal Aviation Administration

### 14 CFR Part 39

**[Docket No. FAA–2005–20742; Directorate Identifier 2005–NE–03–AD]**

**RIN 2120–AA64**

## Airworthiness Directives; Rolls-Royce Corporation (Formerly Allison Engine Company) 501–D22A, 501–D22C, and 501–D22G Turboprop Engines

**AGENCY:** Federal Aviation Administration (FAA), DOT.

**ACTION:** Notice of proposed rulemaking (NPRM).

**SUMMARY:** The FAA proposes to adopt a new airworthiness directive (AD) for Rolls-Royce Corporation (RRC) (formerly Allison Engine Company) 501–D22A, 501–D22C, and 501–D22G turboprop engines. This proposed AD would require a onetime inspection for proper metal hardness of certain 1st stage, 2nd stage, 3rd stage, and 4th stage turbine wheels. This proposed AD results from a report of a turbine wheel found to be over dimensional limits, caused by improper metal hardness. We are proposing this AD to prevent uncontained turbine wheel failure, leading to damage of the airplane and total loss of engine power.

**DATES:** We must receive any comments on this proposed AD by May 31, 2005.

**ADDRESSES:** Use one of the following addresses to comment on this proposed AD.

- DOT Docket Web site: Go to *http://dms.dot.gov* and follow the instructions for sending your comments electronically.
- Government-wide rulemaking Web site: Go to *http://www.regulations.gov* and follow the instructions for sending your comments electronically.
- Mail: Docket Management Facility; U.S. Department of Transportation, 400 Seventh Street, SW., Nassif Building, Room PL–401, Washington, DC 20590–0001.
- Fax: (202) 493–2251.
- Hand Delivery: Room PL–401 on the plaza level of the Nassif Building, 400 Seventh Street, SW., Washington, DC, between 9 a.m. and 5 p.m., Monday through Friday, except Federal holidays.

You can get the service information identified in this proposed AD from Rolls-Royce Corporation, P.O. Box 420, 2001 South Tibbs Avenue, Indianapolis, IN 46206–0420; telephone (317) 230–2000; fax (317) 230–4020.

You may examine the comments on this proposed AD in the AD docket on the Internet at *http://dms.dot.gov.*

**FOR FURTHER INFORMATION CONTACT:** Michael Downs, Aerospace Engineer, Chicago Aircraft Certification Office, FAA, 2300 East Devon Avenue, Des Plaines, IL 60018; telephone (847) 294–7870; fax (847) 294–7834.

**SUPPLEMENTARY INFORMATION:**

**Comments Invited**

We invite you to send us any written relevant data, views, or arguments regarding this proposal. Send your comments to an address listed under **ADDRESSES**. Include ''Docket No. FAA–2005–20742; Directorate Identifier 2005–NE–03–AD'' in the subject line of your comments. We specifically invite comments on the overall regulatory,

economic, environmental, and energy aspects of the proposed AD. We will consider all comments received by the closing date and may amend the proposed AD in light of those comments.

We will post all comments we receive, without change, to *http://dms.dot.gov,* including any personal information you provide. We will also post a report summarizing each substantive verbal contact with FAA personnel concerning this proposed AD. Using the search function of the DMS Web site, anyone can find and read the comments in any of our dockets, including the name of the individual who sent the comment (or signed the comment on behalf of an association, business, labor union, etc.). You may review the DOT's complete Privacy Act Statement in the **Federal Register** published on April 11, 2000 (65 FR 19477–78) or you may visit *http://dms.dot.gov.*

**Examining the AD Docket**

You may examine the docket that contains the proposal, any comments received and, any final disposition in person at the DMS Docket Offices between 9 a.m. and 5 p.m., Monday through Friday, except Federal holidays. The Docket Office (telephone (800) 647–5227) is located on the plaza level of the Department of Transportation Nassif Building at the street address stated in ADDRESSES. Comments will be available in the AD docket shortly after the DMS receives them.

**Discussion**

During the rebuild of an RRC 501 industrial engine's 1st stage turbine wheel that had accumulated 31,000 hours time-in-service, the assembled turbine blade lengths were found to be varying up to 0.012-inch beyond the blade tip run-out limit. The shop inspector considered the turbine wheel suspect and returned it to RRC for metallurgical evaluation. That evaluation revealed that a portion of the turbine wheel had an increased radius, over the maximum radius limit, and a metal hardness below design requirements. RRC reviewed the forging furnace records at the forging plant that heat-treated the turbine wheel. The records showed that the temperature of the heat-treatment solution was about 100 degrees Fahrenheit below the minimum required temperature, for about two hours during the heat-treatment process. RRC reports that the effects of the improper heat treatment are a reduction in metal strength, lower tensile yield, and probability of metal creep, stress rupture, and metal fatigue. The same forging plant heat-treated RRC 501–D22A, 501–D22C, and 501–D22G turboprop engine 1st stage, 2nd stage, 3rd stage, and 4th stage turbine wheels. Those turbine wheels are suspect for improper metal hardness. This condition, if not corrected, could result in uncontained turbine wheel failure, leading to airplane damage and total loss of engine power.

**Relevant Service Information**

We have reviewed and approved the technical contents of Rolls-Royce Commercial Engine Bulletins (CEBs) No. CEB–72–1138, No. CEB–72–4051, and No. CEB–72–1584, (combined in one document) dated January 23, 2004. These bulletins describe procedures for performing a onetime inspection for proper metal hardness of certain 1st stage, 2nd stage, 3rd stage, and 4th stage turbine wheels.

**FAA's Determination and Requirements of the Proposed AD**

We have evaluated all pertinent information and identified an unsafe condition that is likely to exist or develop on other products of this same type design. We are proposing this AD, which would require a onetime inspection for proper metal hardness of certain 1st stage, 2nd stage, 3rd stage, and 4th stage turbine wheels. These inspections would be done at the next shop visit of the engine or turbine module, but not to exceed 7,400 cycles-since-new of any 1st stage, 2nd stage, 3rd stage, or 4th stage turbine wheel. The proposed AD would require you to use the service information described previously to perform these actions.

**Costs of Compliance**

There are about 150 RRC 501–D22A, 501–D22C, and 501–D22G turboprop engines of the affected design in the worldwide fleet. We estimate that 150 engines installed on airplanes of U.S. registry would be affected by this proposed AD. We also estimate that it would take about 0.5 work hour per engine to perform the proposed actions, and that the average labor rate is $65 per work hour. Required parts would cost about $1,495 per turbine wheel. The manufacturer has stated that it may provide replacement parts for turbine wheels that do not meet inspection criteria, at no cost to operators. Based on these figures, we estimate the total cost of the proposed AD to U.S. operators to be $229,125.

**Authority for This Rulemaking**

Title 49 of the United States Code specifies the FAA's authority to issue rules on aviation safety. Subtitle I, Section 106, describes the authority of the FAA Administrator. Subtitle VII, Aviation Programs, describes in more detail the scope of the Agency's authority.

We are issuing this rulemaking under the authority described in Subtitle VII, Part A, Subpart III, Section 44701, ''General requirements.'' Under that section, Congress charges the FAA with promoting safe flight of civil aircraft in air commerce by prescribing regulations for practices, methods, and procedures the Administrator finds necessary for safety in air commerce. This regulation is within the scope of that authority because it addresses an unsafe condition that is likely to exist or develop on products identified in this rulemaking action.

**Regulatory Findings**

We have determined that this proposed AD would not have federalism implications under Executive Order 13132. This proposed AD would not have a substantial direct effect on the States, on the relationship between the national Government and the States, or on the distribution of power and responsibilities among the various levels of government.

For the reasons discussed above, I certify that the proposed regulation:

1. Is not a ''significant regulatory action'' under Executive Order 12866;

2. Is not a ''significant rule'' under the DOT Regulatory Policies and Procedures (44 FR 11034, February 26, 1979); and

3. Would not have a significant economic impact, positive or negative, on a substantial number of small entities under the criteria of the Regulatory Flexibility Act.

We prepared a summary of the costs to comply with this proposal and placed it in the AD Docket. You may get a copy of this summary at the address listed under **ADDRESSES**.

**List of Subjects in 14 CFR Part 39**

Air transportation, Aircraft, Aviation safety, Safety.

**The Proposed Amendment**

Under the authority delegated to me by the Administrator, the Federal Aviation Administration proposes to amend 14 CFR part 39 as follows:

## PART 39—AIRWORTHINESS DIRECTIVES

1. The authority citation for part 39 continues to read as follows:

**Authority:** 49 U.S.C. 106(g), 40113, 44701.

**§ 39.13 [Amended]**

2. The FAA amends § 39.13 by adding the following new airworthiness directive:

**Rolls-Royce Corporation (formerly Allison Engine Company):** Docket No. FAA–2005–20742; Directorate Identifier 2005–NE–03–AD.

**Comments Due Date**

(a) The Federal Aviation Administration (FAA) must receive comments on this airworthiness directive (AD) action by May 31, 2005.

**Affected ADs**

(b) None.

**Applicability**

(c) This AD applies to Rolls-Royce Corporation (RRC) (formerly Allison Engine Company) 501–D22A, 501–D22C, and 501–D22G turboprop engines with the turbine wheels listed in the following Table 1, installed.

TABLE 1.—AFFECTED TURBINE WHEELS

| Turbine wheel part No. | Turbine wheel | Serial Nos. |
|---|---|---|
| 6875431 | 1st Stage | KK50152 through KK50199. |
| 6845592 | 2nd Stage | KK40998 through KK41057. |
| 6845593 | 3rd Stage | KK36452 through KK36461, and KK36492 through KK36532. |
| 6870434 | 4th Stage | KK40320 through KK40393, and KK40485 through KK40535. |

These engines are installed on, but not limited to, Commercial Hercules L–100–20, L–100–30, L–382B, L–382E, and L–382G, Airbus Super Guppy-201, and Super Convair CV–580A, and CV5800 airplanes.

**Unsafe Condition**

(d) This AD results from a report of a turbine wheel found to be over dimensional limits, caused by improper metal hardness. We are issuing this AD to prevent uncontained turbine wheel failure, leading to damage of the airplane and total loss of engine power.

**Compliance**

(e) You are responsible for having the actions required by this AD performed at the next shop visit of the engine or turbine module, but not to exceed 7,400 cycles-since-new of any 1st stage, 2nd stage, 3rd stage, or 4th stage turbine wheel, unless the actions have already been done.

**Onetime Inspection for Proper Metal Hardness**

(f) Perform a onetime inspection for proper metal hardness of 1st stage, 2nd stage, 3rd stage, and 4th stage turbine wheels. Use paragraphs 2.B. and 2.F. of RRC Commercial Engine Bulletins (CEBs) No. CEB–72–1138, No. CEB–72–4051, and No. CEB–72–1584, (combined in one document) dated January 23, 2004.

(g) Remove from service any turbine wheel that does not pass inspection, using paragraph 2.C. of RRC CEBs No. CEB–72–1138, No. CEB–72–4051, and No. CEB–72–1584, (combined in one document) dated January 23, 2004.

(h) Mark the letters, HC, after the serial number on any turbine wheel that passes inspection, using the method described in paragraph 2.D. of RRC CEBs No. CEB–72–1138, No. CEB–72–4051, and No. CEB–72–1584, (combined in one document) dated January 23, 2004.

**Reporting Requirements**

(i) Report findings of inspections using the procedures specified in paragraph 2.E. of RRC CEBs No. CEB–72–1138, No. CEB–72–4051, and No. CEB–72–1584, (combined in one document) dated January 23, 2004. The Office of Management and Budget (OMB) has approved the reporting requirements specified in paragraph 2.E. of RRC CEBs No. CEB–72–1138, No. CEB–72–4051, and No. CEB–72–1584, (combined in one document) dated January 23, 2004, and assigned OMB control number 2120–0056.

**Definition**

(j) For the purpose of this AD, a serviceable turbine wheel is:

(1) A turbine wheel that has a serial number not listed in this AD; and

(2) A turbine wheel that has a serial number listed in this AD that passed the inspection specified in paragraph (f) of this AD.

**Alternative Methods of Compliance**

(k) The Manager, Chicago Aircraft Certification Office, has the authority to approve alternative methods of compliance for this AD if requested using the procedures found in 14 CFR 39.19.

**Related Information**

(1) None.

Issued in Burlington, Massachusetts, on March 22, 2005.

**Peter A. White,**

*Acting Manager, Engine and Propeller Directorate, Aircraft Certification Service.*

[FR Doc. 05–6108 Filed 3–28–05; 8:45 am]

BILLING CODE 4910–13–P

## DEPARTMENT OF HOMELAND SECURITY

## Coast Guard

## 33 CFR Part 100

**[CGD13–05–004]**

**RIN 1625–AA08**

## Special Local Regulations; National Maritime Week Tugboat Races, Seattle, WA

**AGENCY:** Coast Guard, DHS.

**ACTION:** Notice of proposed rulemaking.

**SUMMARY:** The Coast Guard proposes to permanently amend the special local regulation governing general navigation and anchorage in the vicinity of the Annual National Maritime Week Tugboat Races, Seattle, Washington. Changes made to this regulation will clarify its annual enforcement date. This change is intended to better inform the boating public and to improve the level of safety at this event. Entry into the area established is prohibited unless authorized by the Captain of the Port.

**DATES:** Comments and related material must reach the Coast Guard on or before April 19, 2005.

**ADDRESSES:** You may mail comments and related material to Commanding Officer(wwm), Marine Safety Office Puget Sound, 1519 Alaskan Way South, Seattle, Washington 98134. Marine Safety Office Puget Sound maintains the public docket [CGD13–05–004] for this rulemaking. Comments and material received from the public, as well as documents indicated in this preamble as being available in the docket, will become part of this docket and will be available for inspection or copying at Marine Safety Office Puget Sound between 8 a.m. and 4 p.m., Monday through Friday, except Federal holidays.

**FOR FURTHER INFORMATION CONTACT:** LTJG J. L. Hagen, c/o Captain of the Port Puget Sound, 1519 Alaskan Way South, Seattle, WA 98134, (206) 217–6002 or (800) 688–6664.

**SUPPLEMENTARY INFORMATION:**

### Request for Comments

We encourage you to participate in this rulemaking by submitting comments and related material. If you do so, please include your name and address, identify the docket number for this rulemaking (CGD13–05–004), indicate the specific section of this document to which each comment applies, and give the reason for each comment. Please submit all comments and related material in an unbound

format, no larger than 8½ by 11 inches, suitable for copying. If you would like to know they reached us, please enclose a stamped, self-addressed postcard or envelope. We will consider all comments and material received during the comment period. We may change this proposed rule in view of them.

**Public Meeting**

We do not now plan to hold a public meeting. But you may submit a request for a meeting by writing to Marine Safety Office Puget Sound at the address under **ADDRESSES** explaining why one would be beneficial. If we determine that one would aid this rulemaking, we will hold one at a time and place announced by a later notice in the **Federal Register**.

**Background and Purpose**

Each year in May, the Annual National Maritime Week Tugboat Races, are held on the waters of Puget Sound in Elliott Bay near Seattle, Washington. Special local regulations in 33 CFR 100.1306 are enforced each year during the event to provide for public safety by controlling the movement of spectators and participants in the area of the race course.

This proposed rule would permanently amend 33 CFR 100.1306 requiring compliance with the regulation each year on either the second or third Saturday in May. Specific times of compliance will be published in the **Federal Register** each year as a notice of enforcement.

The regulated area and the special local regulations remain unchanged.

**Discussion of Proposed Rule**

The Coast Guard proposes to permanently amend 33 CFR 100.1306—Annual National Maritime Week Tugboat Races, Seattle, Washington, to require compliance with the regulation each year in May on the second or third Saturday.

**Regulatory Evaluation**

This rule is not a ''significant regulatory action'' under section 3(f) of Executive Order 12866 and does not require an assessment of potential costs and benefits under section 6(a)(3) of that Order. The Office of Management and Budget has not reviewed it under that Order. It is not ''significant'' under the regulatory policies and procedures of the Department of Homeland Security (DHS).

We expect the economic impact of this rule to be so minimal that a full Regulatory Evaluation under the regulatory policies and procedures of DHS is unnecessary. This expectation is based on the fact that the regulated area of Elliott Bay is a small area, enforced for a short period of time, and it is established for the benefit and safety of the recreational boating public.

**Small Entities**

Under the Regulatory Flexibility Act (5 U.S.C. 601–612), we have considered whether this rule would have a significant economic impact on a substantial number of small entities. The term ''small entities'' cmprises small businesses, not-for-profit organizations that are independently owned and operated and are not dominant in their fields, and governmental jurisdictions with populations of less than 50,000.

Vessels desiring to transit this area of Elliott Bay may do so by scheduling their trips in the early morning or evening when the restrictions on general navigation imposed by this section will not be in effect. For these reasons, the Coast Guard certifies under 5 U.S.C. 605(b) that this change will not have a significant economic impact on a substantial number of small entities.

Therefore, the Coast Guard certifies under 5 U.S.C. 605(b) that this rule will not have a significant economic impact on a substantial number of small entities. Comments submitted in response to this finding will be evaluated under the criteria in the ''Regulatory Information'' section of this preamble.

**Assistance for Small Entities**

Under section 213(a) of the Small Business Regulatory Enforcement Fairness Act of 1996 (Pub. L. 104–121), we want to assist small entities in understanding this rule so that they can better evaluate its effects on them and participate in the rulemaking. If the rule will affect your small business, organization, or governmental jurisdiction and you have questions concerning its provisions or options for compliance, please contact the person listed in the **FOR FURTHER INFORMATION CONTACT** section. The Coast Guard will not retaliate against small entities that question or complain about this rule or any policy or action of the Coast Guard.

Small businesses may send comments on the actions of Federal employees who enforce, or otherwise determine compliance with, Federal regulations to the Small Business and Agriculture Regulatory Enforcement Ombudsman and the Regional Small Business Regulatory Fairness Boards. The Ombudsman evaluates these actions annually and rates each agency's responsiveness to small business. If you wish to comment on actions by employees of the Coast Guard, call 1–888–REG–FAIR (1–888–734–3247).

**Collection of Information**

This rule calls for no new collection of information under the Paperwork Reduction Act of 1995 (44 U.S.C. 3501–3520).

**Federalism**

A rule has implications for federalism under Executive Order 13132, Federalism, if the rule has a substantial direct effect on State or local governments and would either preempt State law or impose a substantial direct cost of compliance on them. We have analyzed this rule under that Order and have determined that it does not have implications for federalism.

**Unfunded Mandates Reform Act**

The Unfunded Mandates Reform Act of 1995 (2 U.S.C. 1531–1538) requires Federal agencies to assess the effects of their discretionary regulatory actions. In particular, the Act addresses actions that may result in the expenditure by a State, local, or tribal government, in the aggregate, or by the private sector of $100,000,000 or more in any one year. Though this rule will not result in such an expenditure, we do discuss the effects of this rule elsewhere in this preamble.

**Taking of Private Property**

This rule will not effect a taking of private property or otherwise have taking implications under Executive Order 12630, Governmental Actions and Interference with Constitutionally Protected Property Rights.

**Civil Justice Reform**

This rule meets applicable standards in sections 3(a) and 3(b)(2) of Executive Order 12988, Civil Justice Reform, to minimize litigation, eliminate ambiguity, and reduce burden.

**Protection of Children**

We have analyzed this rule under Executive Order 13045, Protection of Children from Environmental Health Risks and Safety Risks. This rule is not an economically significant rule and does not create an environmental risk to health or risk to safety that may disproportionately affect children.

**Indian Tribal Governments**

This rule does not have tribal implications under Executive Order 13175, Consultation and Coordination with Indian Tribal Governments, because it does not have a substantial direct effect on one or more Indian tribes, on the relationship between the

Federal Government and Indian tribes, or on the distribution of power and responsibilities between the Federal Government and Indian tribes.

**Energy Effects**

We have analyzed this rule under Executive Order 13211, Actions Concerning Regulations That Significantly Affect Energy Supply, Distribution, or Use. We have determined that it is not a ''significant energy action'' under that order because it is not a ''significant regulatory action'' under Executive Order 12866 and is not likely to have a significant adverse effect on the supply, distribution, or use of energy. The Administrator of the Office of Information and Regulatory Affairs has not designated it as a significant energy action. Therefore, it does not require a Statement of Energy Effects under Executive Order 13211.

**Technical Standards**

The National Technology Transfer and Advancement Act (NTTAA) (15 U.S.C. 272 note) directs agencies to use voluntary consensus standards in their regulatory activities unless the agency provides Congress, through the Office of Management and Budget, with an explanation of why using these standards would be inconsistent with applicable law or otherwise impractical. Voluntary consensus standards are technical standards (*e.g.*, specifications of materials, performance, design, or operation; test methods; sampling procedures; and related management systems practices) that are developed or adopted by voluntary consensus standards bodies.

This rule does not use technical standards. Therefore, we did not consider the use of voluntary consensus standards.

**Environment**

We have analyzed this rule under Commandant Instruction M16475.lD, which guides the Coast Guard in complying with the National Environmental Policy Act of 1969 (NEPA) (42 U.S.C. 4321–4370f), and have concluded that there are no factors in this case that would limit the use of a categorical exclusion under section 2.B.2 of the Instruction. Therefore, this rule is categorically excluded, under figure 2–1, paragraph (34)(h) of the Instruction from further environmental documentation. Under figure 2–1, paragraph (34)(h), of the Instruction, an ''Environmental Analysis Check List'' and a ''Categorical Exclusion Determination'' are not required for this rule.

**List of Subjects in 33 CFR Part 100**

Marine safety, Navigation (water), Reporting and recordkeeping requirements, Waterways.

For the reasons discussed in the preamble, the Coast Guard proposes to amend 33 CFR part 100 as follows:

## PART 100—SAFETY OF LIFE ON NAVIGABLE WATERS

1. The authority citation for part 100 continues to read as follows:

**Authority:** 33 U.S.C. 1233; Department of Homeland Security Delegation No. 0170.1.

2. In § 100.1306 revise paragraph (c) to read as follows:

**§ 100.1306 National Maritime Week Tugboat Races, Seattle, WA.**

* * * * *

(c) *Enforcement dates.* This section is enforced annually on the second or third Saturday in May from 12 p.m. to 4:30 p.m. The event will be one day only and the specific date will be published each year in the **Federal Register**. In 2005, this section will be enforced from 12 p.m. to 4:30 p.m. on Saturday May 14.

Dated: March 21, 2005.

**J.M. Garrett,**

*Rear Admiral, U.S. Coast Guard, Commander, Thirteenth Coast Guard District.*

[FR Doc. 05–6145 Filed 3–28–05; 8:45 am]

BILLING CODE 4910–15–P

---

## DEPARTMENT OF HOMELAND SECURITY

## Coast Guard

## 33 CFR Part 100

**[CGD05–05–020]**

**RIN 1625–AA08**

## Special Local Regulations for Marine Events; Piankatank River, Gloucester County, VA

**AGENCY:** Coast Guard, DHS.

**ACTION:** Notice of proposed rulemaking.

**SUMMARY:** The Coast Guard proposes to establish special local regulations during the ''2005 Piankatank River Race'', a marine event to be held over the waters of the Piankatank River in Gloucester County, Virginia. These special local regulations are necessary to provide for the safety of life on navigable waters during the event. This action is intended to restrict vessel traffic in the Piankatank River during the event.

**DATES:** Comments and related material must reach the Coast Guard on or before April 28, 2005.

**ADDRESSES:** You may mail comments and related material to Commander (oax), Fifth Coast Guard District, 431 Crawford Street, Portsmouth, Virginia 23704–5004, hand-deliver them to Room 119 at the same address between 9 a.m. and 2 p.m., Monday through Friday, except Federal holidays, or fax them to (757) 398–6203. The Auxiliary and Recreational Boating Safety Branch, Fifth Coast Guard District, maintains the public docket for this rulemaking. Comments and material received from the public, as well as documents indicated in this preamble as being available in the docket, will become part of this docket and will be available for inspection or copying at the above address between 9 a.m. and 2 p.m., Monday through Friday, except Federal holidays.

**FOR FURTHER INFORMATION CONTACT:** Dennis Sens, Project Manager, Auxiliary and Recreational Boating Safety Branch, at (757) 398–6204.

**SUPPLEMENTARY INFORMATION:**

**Request for Comments**

We encourage you to participate in this rulemaking by submitting comments and related material. If you do so, please include your name and address, identify the docket number for this rulemaking (CGD05–05–020), indicate the specific section of this document to which each comment applies, and give the reason for each comment. Please submit all comments and related material in an unbound format, no larger than 8½ by 11 inches, suitable for copying. If you would like to know how they reached us, please enclose a stamped, self-addressed postcard or envelope. We will consider all comments and material received during the comment period. We may change this proposed rule in view of them.

**Public Meeting**

We do not now plan to hold a public meeting. But you may submit a request for a meeting by writing to the address listed under **ADDRESSES** explaining why one would be beneficial. If we determine that one would aid this rulemaking, we will hold one at a time and place announced by a later notice in the **Federal Register**.

**Background and Purpose**

On July 23, 2005, the East Coast Boat Racing Club of New Jersey will sponsor the ''2005 Piankatank River Race'', on the waters of the Piankatank River in

Gloucester County, Virginia. The event will consist of approximately 20 New Jersey Speed Garveys and Jersey Speed Skiffs conducting high-speed competitive races along an oval race course in close proximity to the Thousand Trails Campground, Gloucester, Virginia. A fleet of spectator vessels is expected to gather nearby to view the competition. Due to the need for vessel control during the event, vessel traffic will be temporarily restricted to provide for the safety of participants, spectators and transiting vessels.

**Discussion of Proposed Rule**

The Coast Guard proposes to establish temporary special local regulations on specified waters of the Piankatank River. The temporary special local regulations will be effective from 11:30 a.m. to 4:30 p.m. on July 23, 2005, and will restrict general navigation in the regulated area during the event. Except for participants and vessels authorized by the Coast Guard Patrol Commander, no person or vessel will be allowed to enter or remain in the regulated area. These regulations are needed to control vessel traffic during the event to enhance the safety of participants, spectators and transiting vessels.

**Regulatory Evaluation**

This proposed rule is not a ''significant regulatory action'' under section 3(f) of Executive Order 12866, Regulatory Planning and Review, and does not require an assessment of potential costs and benefits under section 6(a)(3) of that Order. The Office of Management and Budget has not reviewed it under that Order. It is not ''significant'' under the regulatory policies and procedures of the Department of Homeland Security (DHS).

We expect the economic impact of this proposed rule to be so minimal that a full Regulatory Evaluation under the regulatory policies and procedures of DHS is unnecessary. Although this regulation will prevent traffic from transiting a portion of the Piankatank River during the event, the effect of this regulation will not be significant due to the limited duration that the regulated area will be in effect and the extensive advance notifications that will be made to the maritime community via the Local Notice to Mariners, marine information broadcasts, and area newspapers, so mariners can adjust their plans accordingly. Additionally, the regulated area has been narrowly tailored to impose the least impact on general navigation yet provide the level of safety deemed necessary. Vessel traffic will be able to transit the regulated area between heats, when the Coast Guard Patrol Commander deems it is safe to do so.

**Small Entities**

Under the Regulatory Flexibility Act (5 U.S.C. 601–612), we have considered whether this proposed rule would have a significant economic impact on a substantial number of small entities. The term ''small entities'' comprises small businesses, not-for-profit organizations that are independently owned and operated and are not dominant in their fields, and governmental jurisdictions with populations of less than 50,000.

The Coast Guard certifies under 5 U.S.C. 605(b) that this proposed rule would not have a significant economic impact on a substantial number of small entities. This proposed rule would affect the following entities, some of which might be small entities: the owners or operators of vessels intending to transit or anchor in a portion of the Piankatank River during the event.

This proposed rule would not have a significant economic impact on a substantial number of small entities for the following reasons. This proposed rule would be in effect for only a limited period. Vessel traffic will be able to transit the regulated area between heats, when the Coast Guard Patrol Commander deems it is safe to do so. Before the enforcement period, we will issue maritime advisories so mariners can adjust their plans accordingly.

If you think that your business, organization, or governmental jurisdiction qualifies as a small entity and that this rule would have a significant economic impact on it, please submit a comment (*see* **ADDRESSES**) explaining why you think it qualifies and how and to what degree this rule would economically affect it.

**Assistance for Small Entities**

Under section 213(a) of the Small Business Regulatory Enforcement Fairness Act of 1996 (Public Law 104–121), we want to assist small entities in understanding this proposed rule so that they can better evaluate its effects on them and participate in the rulemaking. If the rule would affect your small business, organization, or governmental jurisdiction and you have questions concerning its provisions or options for compliance, please contact the address listed under **ADDRESSES**. The Coast Guard will not retaliate against small entities that question or complain about this rule or any policy or action of the Coast Guard.

**Collection of Information**

This proposed rule would call for no new collection of information under the Paperwork Reduction Act of 1995 (44 U.S.C. 3501–3520).

**Federalism**

A rule has implications for federalism under Executive Order 13132, Federalism, if it has a substantial direct effect on State or local governments and would either preempt State law or impose a substantial direct cost of compliance on them. We have analyzed this proposed rule under that Order and have determined that it does not have implications for federalism.

**Unfunded Mandates Reform Act**

The Unfunded Mandates Reform Act of 1995 (2 U.S.C. 1531–1538) requires Federal agencies to assess the effects of their discretionary regulatory actions. In particular, the Act addresses actions that may result in the expenditure by a State, local, or tribal government, in the aggregate, or by the private sector of $100,000,000 or more in any one year. Though this proposed rule would not result in such an expenditure, we do discuss the effects of this rule elsewhere in this preamble.

**Taking of Private Property**

This proposed rule would not effect a taking of private property or otherwise have taking implications under Executive Order 12630, Governmental Actions and Interference with Constitutionally Protected Property Rights.

**Civil Justice Reform**

This proposed rule meets applicable standards in sections 3(a) and 3(b)(2) of Executive Order 12988, Civil Justice Reform, to minimize litigation, eliminate ambiguity, and reduce burden.

**Protection of Children**

We have analyzed this proposed rule under Executive Order 13045, Protection of Children from Environmental Health Risks and Safety Risks. This rule is not an economically significant rule and would not create an environmental risk to health or risk to safety that might disproportionately affect children.

**Indian Tribal Governments**

This proposed rule does not have tribal implications under Executive Order 13175, Consultation and Coordination with Indian Tribal Governments, because it would not have a substantial direct effect on one or more Indian tribes, on the relationship

between the Federal Government and Indian tribes, or on the distribution of power and responsibilities between the Federal Government and Indian tribes.

**Energy Effects**

We have analyzed this proposed rule under Executive Order 13211, Actions Concerning Regulations That Significantly Affect Energy Supply, Distribution, or Use. We have determined that it is not a ''significant energy action'' under that order because it is not a ''significant regulatory action'' under Executive Order 12866 and is not likely to have a significant adverse effect on the supply, distribution, or use of energy. The Administrator of the Office of Information and Regulatory Affairs has not designated it as a significant energy action. Therefore, it does not require a Statement of Energy Effects under Executive Order 13211.

**Technical Standards**

The National Technology Transfer and Advancement Act (NTTAA) (15 U.S.C. 272 note) directs agencies to use voluntary consensus standards in their regulatory activities unless the agency provides Congress, through the Office of Management and Budget, with an explanation of why using these standards would be inconsistent with applicable law or otherwise impractical. Voluntary consensus standards are technical standards (*e.g.*, specifications of materials, performance, design, or operation; test methods; sampling procedures; and related management systems practices) that are developed or adopted by voluntary consensus standards bodies.

This proposed rule does not use technical standards. Therefore, we did not consider the use of voluntary consensus standards.

**Environment**

We have analyzed this proposed rule under Commandant Instruction M16475.lD, which guides the Coast Guard in complying with the National Environmental Policy Act of 1969 (NEPA) (42 U.S.C. 4321–4370f), and have concluded that there are no factors in this case that would limit the use of a categorical exclusion under section 2.B.2 of the Instruction. Therefore, this rule is categorically excluded, under figure 2–1, paragraph (34)(h), of the Instruction, from further environmental documentation. Special local regulations issued in conjunction with a regatta or marine parade permit are specifically excluded from further analysis and documentation under that section.

Under figure 2–1, paragraph (34)(h), of the Instruction, an ''Environmental Analysis Check List'' and a ''Categorical Exclusion Determination'' are not required for this rule. Comments on this section will be considered before we make the final decision on whether to categorically exclude this rule from further environmental review.

**List of Subjects in 33 CFR Part 100**

Marine safety, Navigation (water), Reporting and recordkeeping requirements, Waterways.

For the reasons discussed in the preamble, the Coast Guard proposes to amend 33 CFR part 100 as follows:

## PART 100—REGATTAS AND MARINE PARADES

1. The authority citation for part 100 continues to read as follows:

**Authority:** 33 U.S.C. 1233; Department of Homeland Security Delegation No. 0170.1.

2. Add a temporary § 100.35–T05–020 to read as follows:

**§ 100.35–T05–020 Piankatank River, Gloucester County, Virginia.**

(a) *Definitions:*

(1) *Coast Guard Patrol Commander* means a commissioned, warrant, or petty officer of the Coast Guard who has been designated by the Commander, Coast Guard Group Hampton Roads.

(2) *Official Patrol* means any vessel assigned or approved by Commander, Coast Guard Group Hampton Roads with a commissioned, warrant, or petty officer on board and displaying a Coast Guard ensign.

(3) *Participant* includes all vessels participating in the 2005 Piankatank River Race under the auspices of a Marine Event Permit issued to the event sponsor and approved by Commander, Coast Guard Group Hampton Roads.

(4) *Regulated area* includes all waters of the Piankatank River, along the shoreline adjacent to the Thousand Trails Campground, Gloucester County, Virginia, to and including waters up to 300 yards offshore, parallel with the Gloucester County shoreline in this area.

(b) Special local regulations:

(1) Except for event participants and persons or vessels authorized by the Coast Guard Patrol Commander, no person or vessel may enter or remain in the regulated area.

(2) The operator of any vessel in the regulated area shall:

(i) Stop the vessel immediately when directed to do so by any Official Patrol.

(ii) Proceed as directed by any Official Patrol.

(iii) Unless otherwise directed by the Official Patrol, operate at a minimum wake speed not to exceed six (6) knots.

(c) *Effective period.* This section is effective from 11:30 a.m. to 4:30 p.m. on July 23, 2005. In the event of inclement weather, the alternate date is July 24, 2005.

Dated: March 17, 2005.

**Ben R. Thomason, III,**

*Captain, U.S. Coast Guard, Acting Commander, Fifth Coast Guard District.*

[FR Doc. 05–6146 Filed 3–28–05; 8:45 am]

BILLING CODE 4910–15–P

---

## ENVIRONMENTAL PROTECTION AGENCY

## 40 CFR Part 52

**[R06–OAR–2005–TX–0008; FRL—7890–3]**

## Approval and Promulgation of Air Quality Implementation Plans; Texas; Revisions To Control Volatile Organic Compound Emissions

**AGENCY:** Environmental Protection Agency (EPA).

**ACTION:** Proposed rule.

**SUMMARY:** EPA is proposing to approve Texas State Implementation Plan (SIP) revisions. The revisions pertain to regulations to control volatile organic compound (VOC) emissions from solvent degreasing processes, cutback asphalt, and motor vehicle fuel dispensing facilities. The control of VOC emissions will help to attain and maintain national ambient air quality standards for ozone in Texas. This approval will make the revised regulations Federally enforceable.

**DATES:** Written comments should be received on or before April 28, 2005.

**ADDRESSES:** Comments may be mailed to Mr. Thomas Diggs, Chief, Air Planning Section (6PD–L), Environmental Protection Agency, Region 6, 1445 Ross Avenue, Suite 1200, Dallas, Texas 75202–2733. Comments may also be submitted electronically or through hand deliver/courier by following the detailed instructions in the **ADDRESSES** section of the direct final rule located in the rules section of this **Federal Register**.

**FOR FURTHER INFORMATION CONTACT:** Carl Young, Air Planning Section (6PD–L), Environmental Protection Agency, Region 6, 1445 Ross Avenue, Suite 700, Dallas, Texas 75202–2733, telephone 214–665–6645; fax number 214–665–7263; e-mail address *young.carl@epa.gov*.

**SUPPLEMENTARY INFORMATION:** In the final rules section of this **Federal Register**, EPA is approving the State's SIP submittal as a direct final rule without prior proposal because the Agency views this as a noncontroversial submittal and anticipates no relevant adverse comments. A detailed rationale for the approval is set forth in the direct final rule. If no relevant adverse comments are received in response to this action, no further activity is contemplated. If EPA receives relevant adverse comments, the direct final rule will be withdrawn and all public comments received will be addressed in a subsequent final rule based on this proposed rule. EPA will not institute a second comment period. Any parties interested in commenting on this action should do so at this time. Please note that if EPA receives adverse comment on an amendment, paragraph, or section of the rule, and if that provision may be severed from the remainder of the rule, EPA may adopt as final those provisions of the rule that are not the subject of an adverse comment.

For additional information, see the direct final rule which is located in the rules section of this **Federal Register**.

Dated: March 18, 2005.

**Richard E. Greene,**

*Regional Administrator, Region 6.*

[FR Doc. 05–6197 Filed 3–28–05; 8:45 am]

**BILLING CODE 6560–50–P**

---

## ENVIRONMENTAL PROTECTION AGENCY

## 40 CFR Part 52

**[R03–OAR–2005–PA–0009; FRL–7890–8]**

## Approval and Promulgation of Air Quality Implementation Plans; Pennsylvania; VOC RACT Determinations for Eleven Individual Sources

**AGENCY:** Environmental Protection Agency (EPA).

**ACTION:** Proposed rule.

**SUMMARY:** EPA proposes to approve the State Implementation Plan (SIP) revision submitted by the Commonwealth of Pennsylvania for the purpose of establishing and requiring reasonably available control technology (RACT) for eleven major sources of volatile organic compounds (VOC). In the Final Rules section of this **Federal Register**, EPA is approving the State's SIP submittal as a direct final rule without prior proposal because the Agency views this as a noncontroversial submittal and anticipates no adverse comments. A detailed rationale for the approval is set forth in the direct final rule. If no adverse comments are received in response to this action, no further activity is contemplated. If EPA receives adverse comments, the direct final rule will be withdrawn and all public comments received will be addressed in a subsequent final rule based on this proposed rule. EPA will not institute a second comment period. Any parties interested in commenting on this action should do so at this time.

**DATES:** Comments must be received in writing by April 28, 2005.

**ADDRESSES:** Submit your comments, identified by Regional Material in EDocket (RME) ID Number R03–OAR–2005–PA–0009 by one of the following methods:

A. Federal eRulemaking Portal: *http://www.regulations.gov*. Follow the on-line instructions for submitting comments.

B. Agency Web site: *http://www.docket.epa.gov/rmepub/* RME, EPA's electronic public docket and comment system, is EPA's preferred method for receiving comments. Follow the on-line instructions for submitting comments.

C. E-mail: *morris.makeba@epa.gov*.

D. Mail: R03–OAR–2005–PA–0009, Makeba Morris, Chief, Air Quality Planning Branch, Mailcode 3AP21, U.S. Environmental Protection Agency, Region III, 1650 Arch Street, Philadelphia, Pennsylvania 19103.

E. Hand Delivery: At the previously-listed EPA Region III address. Such deliveries are only accepted during the Docket's normal hours of operation, and special arrangements should be made for deliveries of boxed information.

*Instructions:* Direct your comments to RME ID No. R03–OAR–2005–PA–0009. EPA's policy is that all comments received will be included in the public docket without change, and may be made available online at *http://www.docket.epa.gov/rmepub/*, including any personal information provided, unless the comment includes information claimed to be Confidential Business Information (CBI) or other information whose disclosure is restricted by statute. Do not submit information that you consider to be CBI or otherwise protected through RME, regulations.gov or e-mail. The EPA RME and the Federal regulations.gov Web sites are an ''anonymous access'' system, which means EPA will not know your identity or contact information unless you provide it in the body of your comment. If you send an e-mail comment directly to EPA without going through RME or regulations.gov, your e-mail address will be automatically captured and included as part of the comment that is placed in the public docket and made available on the Internet. If you submit an electronic comment, EPA recommends that you include your name and other contact information in the body of your comment and with any disk or CD–ROM you submit. If EPA cannot read your comment due to technical difficulties and cannot contact you for clarification, EPA may not be able to consider your comment. Electronic files should avoid the use of special characters, any form of encryption, and be free of any defects or viruses.

*Docket:* All documents in the electronic docket are listed in the RME index at *http://www.docket.epa.gov/rmepub/*. Although listed in the index, some information is not publicly available, *i.e.*, CBI or other information whose disclosure is restricted by statute. Certain other material, such as copyrighted material, is not placed on the Internet and will be publicly available only in hard copy form. Publicly available docket materials are available either electronically in RME or in hard copy during normal business hours at the Air Protection Division, U.S. Environmental Protection Agency, Region III, 1650 Arch Street, Philadelphia, Pennsylvania 19103. Copies of the State submittal are available at the Pennsylvania Department of Environmental Resources Bureau of Air Quality Control, P.O. Box 8468, 400 Market Street, Harrisburg, Pennsylvania 17105.

**FOR FURTHER INFORMATION CONTACT:** Pauline De Vose, (215) 814–2186, or by e-mail at *devose.pauline@epa.gov*. Please note that while questions may be posed via telephone and e-mail, formal comments must be submitted, in writing, as indicated in the **ADDRESSES** section of this document.

**SUPPLEMENTARY INFORMATION:** For further information, please see the information provided in the direct final action, Approval of Pennsylvania's VOC RACT Determinations for Eleven Individual Sources, that is located in the ''Rules and Regulations'' section of this **Federal Register** publication. Please note that if EPA receives adverse comment on an amendment, paragraph, or section of this rule and if that provision may be severed from the remainder of the rule, EPA may adopt as final those provisions of the rule that are not the subject of an adverse comment.

Dated: March 18, 2005.

**James Newsom,**

*Acting Regional Administrator, Region III.*

[FR Doc. 05–6198 Filed 3–28–05; 8:45 am]

**BILLING CODE 6560–50–P**

## GENERAL SERVICES ADMINISTRATION

## 41 CFR Parts 101–48 and 102–41

**[FPMR 2004–101–1]**
**[FMR 2004–102–2]**

**RIN 3090–AH11**

## Federal Property Management Regulations; Disposition of Seized, Forfeited, Voluntarily Abandoned, and Unclaimed Personal Property

**AGENCY:** Office of Governmentwide Policy, General Services Administration (GSA).

**ACTION:** Proposed rule.

**SUMMARY:** The General Services Administration (GSA) is proposing to amend the Federal Property Management Regulations (FPMR) by revising coverage on utilization, donation, or disposal of abandoned and forfeited personal property and moving it into the Federal Management Regulation (FMR). A cross-reference is added to the FPMR to direct readers to the coverage in the FMR. The FMR coverage is written in plain language to provide agencies with updated regulatory material that is easy to read and understand.

**DATES:** Interested parties should submit comments in writing on or before April 28, 2005, to be considered in the formulation of a final rule.

**ADDRESSES:** Submit comments identified by FPMR case 2004–101–1 by any of the following methods:

- Federal eRulemaking Portal: *http://www.regulations.gov*. Follow the instructions for submitting comments.
- Agency Web Site: *http://www.acqnet.gov/far/ProposedRules/proposed.htm*. Click on the FPMR case number to submit comments.
- E-mail: *fpmrcase.2004–101–1@gsa.gov*. Include FPMR case 2004–101–1 in the subject line of the message.
- Fax: 202–501–4067.
- Mail: General Services Administration, Regulatory Secretariat (MVA), 1800 F Street, NW, Room 4035, ATTN: Laurie Duarte, Washington, DC 20405.

*Instructions:* Please submit comments only and cite FPMR case 2004–101–1 in all correspondence related to this case. All comments received will be posted without change to *http://www.acqnet.gov/far/ProposedRules/proposed.htm*, including any personal information provided.

**FOR FURTHER INFORMATION CONTACT:** The Regulatory Secretariat, Room 4035, GS Building, Washington, DC, 20405, at (202) 208–7312 for information pertaining to status or publication schedules. For clarification of content, contact Robert A. Holcombe, Director, Personal Property Management Policy Division (MTP), at (202) 501–3828, or Internet e-mail at *robert.holcombe@gsa.gov*. Please cite FPMR case 2004–101–1.

**SUPPLEMENTARY INFORMATION:**

### A. Background

This proposed rule updates, streamlines, and clarifies FPMR part 101–48 and moves the part into the Federal Management Regulation (FMR). The proposed rule is written in a plain language question and answer format. This style uses an active voice, shorter sentences, and pronouns. A question and its answer combine to establish a rule. The employee and the agency must follow the language contained in both the question and its answer.

### B. Executive Order 12866

GSA has determined that this proposed rule is not a significant rule for the purposes of Executive Order 12866 of September 30, 1993.

### C. Regulatory Flexibility Act

This proposed rule is not required to be published in the **Federal Register** for notice and comment; therefore the Regulatory Flexibility Act, 5 U.S.C. 601, *et seq.*, does not apply.

### D. Paperwork Reduction Act

The Paperwork Reduction Act does not apply because this proposed rule does not impose recordkeeping or information collection requirements, or the collection of information from offerors, contractors, or members of the public which require the approval of the Office of Management and Budget (OMB) under 44 U.S.C. 3501, *et seq.*

### E. Small Business Regulatory Enforcement Fairness Act

This proposed rule is exempt from Congressional review prescribed under 5 U.S.C. 801 since it relates solely to agency management and personnel.

### List of Subjects in 41 CFR Parts 101–48 and 102–41

Government property management.

Dated: September 10, 2004.

**Becky Rhodes,**

*Acting Associate Administrator, Office of Governmentwide Policy.*

**[Editorial note:** This document was received at the Office of the Federal Register on March 23, 2005.]

For the reasons set forth in the preamble, GSA proposes to amend 41 CFR chapters 101 and 102 as follows:

## CHAPTER 101—FEDERAL PROPERTY MANAGEMENT REGULATIONS

1. Part 101–48 is revised to read as follows:

## PART 101–48—UTILIZATION, DONATION, OR DISPOSAL OF ABANDONED AND FORFEITED PERSONAL PROPERTY

**Authority:** 40 U.S.C. 121(c).

### § 101–48.000 Cross-reference to the Federal Management Regulation (FMR) (41 CFR chapter 102, parts 102–1 through 102–220).

For information on the disposition of seized, forfeited, voluntarily abandoned, and unclaimed personal property, see FMR part 102–41 (41 CFR part 102–41).

## CHAPTER 102—FEDERAL MANAGEMENT REGULATION

2. Part 102–41 is added to subchapter B of chapter 102 to read as follows:

## PART 102–41—DISPOSITION OF SEIZED, FORFEITED, VOLUNTARILY ABANDONED, AND UNCLAIMED PERSONAL PROPERTY

Sec.

**Subpart A—General Provisions**

102–41.5 What does this part cover?
102–41.10 To whom do ''we'', ''you'', and their variants refer?
102–41.15 How do we request a deviation from these requirements and who can approve it?

**Definitions**

102–41.20 What definitions apply to this part?

**Responsibility**

102–41.25 Who retains custody and is responsible for the reporting, care, and handling of property covered by this part?
102–41.30 What is GSA's role in the disposition of property covered by this part?
102–41.35 Do we report to GSA all seized personal property subject to judicial forfeiture as well as forfeited, voluntarily abandoned, or unclaimed personal property not retained for official use?

**Subpart B—Seized or Forfeited Personal Property**

102–41.40 How is personal property forfeited?
102–41.45 May we place seized personal property into official use before the forfeiture process is completed?
102–41.50 May we retain forfeited personal property for official use?
102–41.55 Where do we send the reports for seized or forfeited personal property?
102–41.60 Are there special requirements in reporting seized or forfeited personal property to GSA?
102–41.65 What happens to forfeited personal property that is transferred or retained for official use?
102–41.70 Are transfers of forfeited personal property reimbursable?
102–41.75 May we retain the proceeds from the sale of forfeited personal property?

**Subpart C—Voluntarily Abandoned Personal Property**

102–41.80 When is personal property voluntarily abandoned?
102–41.85 May we retain voluntarily abandoned personal property for official use?
102–41.90 What happens to voluntarily abandoned personal property retained for official use?
102–41.95 Where do we send the reports for voluntarily abandoned personal property?
102–41.100 What information do we provide when reporting voluntarily abandoned personal property to GSA?
102–41.105 What happens to voluntarily abandoned personal property when reported to GSA?
102–41.110 Are transfers of voluntarily abandoned personal property reimbursable?
102–41.115 May we retain the proceeds from the sale of voluntarily abandoned personal property?

**Subpart D—Unclaimed Personal Property**

102–41.120 How long must we hold unclaimed personal property before disposition?
102–41.125 May we retain unclaimed personal property for official use?
102–41.130 What must we do when we retain unclaimed personal property for official use?
102–41.135 How much reimbursement do we pay the former owner when he or she files a claim for unclaimed personal property that we no longer have?
102–41.140 When do we report to GSA unclaimed personal property not retained for official use?
102–41.145 Where do we send the reports for unclaimed personal property?
102–41.150 What special information do we provide on reports of unclaimed personal property?
102–41.155 Is unclaimed personal property available for transfer to another Federal agency?
102–41.160 May we retain the reimbursement from transfers of unclaimed personal property?
102–41.165 May we require reimbursement for the costs incurred in the transfer of unclaimed personal property?
102–41.170 Is unclaimed personal property available for donation?
102–41.175 May we sell unclaimed personal property?
102–41.180 May we retain the proceeds from the sale of unclaimed personal property?

**Subpart E—Personal Property Requiring Special Handling**

102–41.185 Are there certain types of forfeited, voluntarily abandoned, or unclaimed property that must be handled differently than other property addressed in this part?

**Firearms**

102–41.190 May we retain forfeited, voluntarily abandoned, or unclaimed firearms for official use?
102–41.195 How do we dispose of forfeited, voluntarily abandoned, or unclaimed firearms not retained for official use?
102–41.200 Are there special disposal provisions for firearms that are seized and forfeited for a violation of the National Firearms Act?

**Forfeited Distilled Spirits, Wine, and Beer**

102–41.205 Do we report all forfeited distilled spirits, wine, and beer to GSA for disposal?

**Drug Paraphernalia**

102–41.210 What are some examples of drug paraphernalia?
102–41.215 Do we report to GSA all forfeited, voluntarily abandoned, or unclaimed drug paraphernalia not required for official use?
102–41.220 Is drug paraphernalia forfeited under 21 U.S.C. 863 available for transfer to other Federal agencies or donation through a State agency for surplus property (SASP)?
102–41.225 Are there special provisions to reporting and transferring drug paraphernalia forfeited under 21 U.S.C. 863?
102–41.230 May SASPs pick up or store donated drug paraphernalia in their distribution centers?
102–41.235 May we sell forfeited drug paraphernalia?

**Authority:** 40 U.S.C. 121(c).

## Subpart A—General Provisions

### § 102–41.5 What does this part cover?

(a) This part covers the disposal of seized, forfeited, voluntarily abandoned, and unclaimed personal property under the custody of any Federal agency located in the United States, the U.S. Virgin Islands, American Samoa, Guam, the Commonwealth of Puerto Rico, the Northern Mariana Islands, the Federated States of Micronesia, the Marshall Islands, and Palau. Disposition of such personal property located elsewhere must be in accordance with holding agency regulations. Additional guidance on disposition of seized, forfeited, voluntarily abandoned, and unclaimed personal property that requires special handling (e.g., firearms, hazardous materials) is contained in part 101–42 of this title. Additional guidance on the disposition of firearms (as scrap only), distilled spirits, wine, beer, and drug paraphernalia is provided in subpart E of this part.

(b) These regulations do not include disposal of seized, forfeited, voluntarily abandoned, and unclaimed personal property covered under authorities outside of the following statutes:

(1) 40 U.S.C. 552, Abandoned or Unclaimed Property on Government Premises;

(2) 40 U.S.C. 1306, Disposition of Abandoned or Forfeited Property;

(3) 26 U.S.C. 5688, Forfeited Distilled Spirits, Wines, and Beer;

(4) 26 U.S.C. 5872, Forfeited Firearms; and

(5) 21 U.S.C. 863, Drug Paraphernalia.

### § 102–41.10 To whom do ''we'', ''you'', and their variants refer?

Use of pronouns ''we'', ''you'', and their variants throughout this part refer to the agency having custody of the personal property.

### § 102–41.15 How do we request a deviation from these requirements and who can approve it?

See §§ 102–2.60 through 102–2.110 of this chapter to request a deviation from the requirements of this part.

## Definitions

### § 102–41.20 What definitions apply to this part?

The following definitions apply to this part:

*Beer* means an alcoholic beverage made from malted cereal grain, flavored with hops, and brewed by slow fermentation.

*Distilled spirits*, as defined in the Federal Alcohol Administration Act (27 U.S.C. 211), means ethyl alcohol; hydrated oxide of ethyl; or spirits of wine, whiskey, rum, brandy, gin, and other distilled spirits, including all dilutions and mixtures thereof, for non-industrial use.

*Drug paraphernalia* means any equipment, product, or material primarily intended or designed for use in manufacturing, compounding, converting, concealing, processing, preparing, or introducing into the human body a controlled substance in violation of the Controlled Substances Act (see 21 U.S.C. 863). It includes items primarily for use in injecting, ingesting, inhaling, or otherwise introducing marijuana, cocaine, hashish, hashish oil, PCP, or amphetamines into the human body.

*Eleemosynary institution* means any nonprofit health or medical institution that is organized and operated for charitable purposes.

*Firearms* means any weapon, silencer, or destructive device designed to, or readily convertible to, expel a projectile by the action of an explosive, as defined in the Internal Revenue Code (26 U.S.C. 5845). Excludes antique firearms as defined in 26 U.S.C. 5845(g).

*Forfeited property* means personal property that the Government has acquired ownership of through a summary process or court order pursuant to any law of the United States.

*Seized property* means personal property that has been confiscated by a Federal agency, and whose care and handling will be the responsibility of the agency until final ownership is determined by the judicial process.

*Unclaimed property* means personal property unknowingly abandoned and found on premises owned or leased by the Government, i.e., ''lost and found'' property.

*Voluntarily abandoned property* means personal property abandoned to any Federal agency in a way that immediately vests title to the property in the Government. There must be evidence that the property was intentionally and voluntarily abandoned.

*Wine* means the fermented juice of a plant product, as defined in 27 U.S.C. 211.

## Responsibility

### § 102–41.25 Who retains custody and is responsible for the reporting, care, and handling of property covered by this part?

You, the holding agency, normally retain physical custody of the property and are responsible for its care and handling pending final disposition. With the exception of property listed in § 102–41.35, you must report promptly to the General Services Administration forfeited, voluntarily abandoned, or unclaimed personal property not being retained for official use and seized property on which proceedings for forfeiture by court decree are being started or have begun. In general, the procedures for reporting such property parallel those for reporting excess personal property under part 102–36 of this subchapter B.

### § 102–41.30 What is GSA's role in the disposition of property covered by this part?

(a) *Seized property subject to court proceedings for forfeiture.* (1) If the seizing agency files a request for the property for its official use, the GSA regional office will apply to the court for an order to turn the property over to the agency should forfeiture be decreed. If no such request has been filed, GSA will determine whether retention of the property for Federal official use is in the Government's best interest, and, if so, will apply to the court to order delivery of the property to—

(i) Any other Federal agency that requests it; or

(ii) The seizing agency to be retained for a reasonable time in case the property may later become necessary to any agency for official use.

(2) In the event that the property is not ordered by competent authority to be forfeited to the United States, it may be returned to the claimant.

(b) *Forfeited, voluntarily abandoned, or unclaimed property.* When forfeited, voluntarily abandoned, or unclaimed property is reported to GSA for disposal, GSA will direct its disposition by:

(1) Transfer to another Federal agency;

(2) Donation to an eligible recipient, if the property is not needed by a Federal agency and there are no requirements for reimbursement to satisfy the claims of owners, lien holders, or other lawful claimants;

(3) Sale; or

(4) Destruction.

### § 102–41.35 Do we report to GSA all seized personal property subject to judicial forfeiture as well as forfeited, voluntarily abandoned, or unclaimed personal property not retained for official use?

Yes, send GSA reports of excess (see § 102–36.125 of this subchapter B) for all seized personal property subject to judicial forfeiture as well as forfeited, voluntarily abandoned, or unclaimed personal property not required for official use, except the following, whose disposition is covered under other statutes and authorities:

(a) Forfeited firearms or munitions of war seized by the Department of Commerce and transferred to the Department of Defense (DOD) pursuant to 22 U.S.C. 401;

(b) Forfeited firearms directly transferable to DOD by law;

(c) Seeds, plants, or misbranded packages seized by the Department of Agriculture;

(d) Game animals and equipment (other than vessels, including cargo) seized by the Department of the Interior;

(e) Files of papers and undeliverable mail in the custody of the United States Postal Service;

(f) Articles in the custody of the Department of Commerce Patent and Trademark Office that are in violation of laws governing trademarks or patents;

(g) Seized, forfeited, voluntarily abandoned, and unclaimed personal property subject to U.S. Customs and Border Protection laws and regulations;

(h) Property seized in payment of or as security for debts arising under the internal revenue laws;

(i) Lost, abandoned, or unclaimed personal property the Coast Guard or the military services are authorized to dispose of under 10 U.S.C. 2575;

(j) Property of deceased veterans left on a Government facility subject to 38 U.S.C. 8501;

(k) Controlled substances reportable to the Drug Enforcement Administration, Department of Justice, Washington, DC 20537;

(l) Forfeited, condemned, or voluntarily abandoned tobacco, snuff, cigars, or cigarettes which, if offered for sale, will not bring a price equal to the internal revenue tax due and payable thereon; and which is subject to destruction or delivery without payment of any tax to any hospital maintained by the Federal Government for the use of present or former members of the military; and

(m) Property determined appropriate for abandonment/destruction (see § 102–36.305 of this subchapter B).

## Subpart B—Seized or Forfeited Personal Property

### § 102–41.40 How is personal property forfeited?

Personal property that has been seized by a Federal agency may be forfeited through court decree (judicial forfeiture) or administratively forfeited if the agency has specific authority without going through the courts.

### § 102–41.45 May we place seized personal property into official use before the forfeiture process is completed?

No, property under seizure and pending forfeiture cannot be placed into official use until a final determination is made to vest title in the Government.

### § 102–41.50 May we retain forfeited personal property for official use?

Yes, you may retain for official use personal property forfeited to your agency, except for property you are required by law to sell. Retention of large sedans and limousines for official use is only authorized under the provisions of part 102–34 of this subchapter B. Except for the items noted in § 102–41.35, report to GSA all forfeited personal property not being retained for official use.

### § 102–41.55 Where do we send the reports for seized or forfeited personal property?

(a) Except for the items noted in paragraph (b) of this section, report

seized or forfeited personal property not retained for official use to the General Services Administration, Property Management Branch (3FPD), Washington, DC 20407.

(b) Report aircraft, firearms, and vessels to the regional GSA Property Management Branch office specified in § 102–36.125 of this subchapter B.

### § 102–41.60 Are there special requirements in reporting seized or forfeited personal property to GSA?

Yes, in addition to the information required in § 102–36.235 of this subchapter B for reporting excess, you must indicate—

(a) Whether the property—

(1) Was forfeited in a judicial proceeding or administratively (without going through a court);

(2) Is subject to pending court proceedings for forfeiture, and, if so, the name of the defendant, the place and judicial district of the court from which the decree will be issued, and whether you wish to retain the property for official use;

(b) The report or case number under which the property is listed; and

(c) The existence or probability of a lien, or other accrued or accruing charges, and the amount involved.

### § 102–41.65 What happens to forfeited personal property that is transferred or retained for official use?

Except for drug paraphernalia (see §§ 102–41.210 through 102–41.235), forfeited personal property retained for official use or transferred to another Federal agency under this subpart loses its identity as forfeited property. When no longer required for official use, you must report it to GSA as excess for disposal in accordance with part 102–36 of this subchapter B. You must follow the additional provisions of subpart E of this part and part 101–42 of this title when disposing of firearms, distilled spirits, wine, beer, and drug paraphernalia.

### § 102–41.70 Are transfers of forfeited personal property reimbursable?

Recipient agencies do not pay for the property. However, you may charge the recipient agency all costs you incurred in storing, packing, loading, preparing for shipment, and transporting the property. If there are commercial charges incident to forfeiture prior to the transfer, the recipient agency must pay these charges when billed by the commercial organization. Any payment due to lien holders or other lawful claimants under a judicial forfeiture must be made in accordance with provisions of the court decree.

### § 102–41.75 May we retain the proceeds from the sale of forfeited personal property?

No, you must deposit the sales proceeds in the U.S. Treasury as miscellaneous receipts, unless otherwise directed by court decree or specifically authorized by statute.

## Subpart C—Voluntarily Abandoned Personal Property

### § 102–41.80 When is personal property voluntarily abandoned?

Personal property is voluntarily abandoned when the owner of the property intentionally and voluntarily gives up title to such property and title vests in the Government. The receiving agency ordinarily documents receipt of the property to evidence its voluntary relinquishment.

### § 102–41.85 May we retain voluntarily abandoned personal property for official use?

Yes, you may retain for official use any voluntarily abandoned personal property, except for large sedans and limousines where retention for official use is only authorized under the provisions of part 102–34 of this subchapter B.

### § 102–41.90 What happens to voluntarily abandoned personal property retained for official use?

Voluntarily abandoned personal property retained for official use or transferred to another Federal agency under this subpart loses its identity as voluntarily abandoned property. When no longer required for official use, you must report it to GSA as excess in accordance with part 102–36 of this subchapter B.

### § 102–41.95 Where do we send the reports for voluntarily abandoned personal property?

Except for aircraft, firearms, and vessels, report voluntarily abandoned personal property to the regional GSA Property Management Branch office for the region in which the property is located. Report aircraft, firearms, and vessels to the regional GSA Property Management Branch office specified in § 102–36.125 of this subchapter B.

### § 102–41.100 What information do we provide when reporting voluntarily abandoned personal property to GSA?

When reporting voluntarily abandoned personal property to GSA, you must provide a description and location of the property, and annotate that the property was voluntarily abandoned.

### § 102–41.105 What happens to voluntarily abandoned personal property when reported to GSA?

Voluntarily abandoned personal property reported to GSA will be made available for transfer, donation, or sale in accordance with parts 102–36, 102–37, and 102–38 of this subchapter B, respectively. You must follow the additional provisions of §§ 102–41.190 through 102–41.235 and part 101–42 of this title when disposing of firearms and other property requiring special handling.

### § 102–41.110 Are transfers of voluntarily abandoned personal property reimbursable?

No, all transfers of voluntarily abandoned personal property will be without reimbursement. However, you may charge the recipient agency all costs you incurred in storing, packing, loading, preparing for shipment, and transporting the property.

### § 102–41.115 May we retain the proceeds from the sale of voluntarily abandoned personal property?

No, you must deposit the sales proceeds in the U.S. Treasury as miscellaneous receipts unless your agency has specific statutory authority to do otherwise.

## Subpart D—Unclaimed Personal Property

### § 102–41.120 How long must we hold unclaimed personal property before disposition?

You must hold unclaimed personal property for 30 calendar days from the date it was found. Unless the previous owner files a claim, title to the property vests in the Government after 30 days, and you may retain or dispose of the property in accordance with this part.

### § 102–41.125 May we retain unclaimed personal property for official use?

Yes, if you have held unclaimed personal property for 30 calendar days and the former owner has not filed a claim, title vests in the Government and you may retain the unclaimed property for official use. You may retain large sedans and limousines for official use only if such retention is authorized under part 102–34 of this subchapter B.

### § 102–41.130 What must we do when we retain unclaimed personal property for official use?

(a) You must maintain records of unclaimed personal property retained for official use for 3 years after title vests in the Government to permit identification of the property should the former owner file a claim for the property. You must also deposit funds

received from disposal of such property in a special account to cover any valid claim filed within this 3–year period.

(b) When you no longer need the unclaimed property which you have placed in official use, report it as excess in the same manner as other excess property under part 102–36 of this subchapter B.

**§ 102–41.135 How much reimbursement do we pay the former owner when he or she files a claim for unclaimed personal property that we no longer have?**

Reimbursement of the property to the former owner must not exceed any proceeds from the disposal of such property, less the costs of the Government's care and handling of the property.

**§ 102–41.140 When do we report to GSA unclaimed personal property not retained for official use?**

After you have held the property for 30 calendar days and no one has filed a claim for it, the title to the property vests in the Government. If you decide not to retain the property for official use, report it as excess to GSA in accordance with part 102–36 of this subchapter B.

**§ 102–41.145 Where do we send the reports for unclaimed personal property?**

Except for the items noted in § 102–36.125 of this subchapter B, report unclaimed personal property to the regional GSA Property Management Branch office for the region in which the property is located.

**§ 102–41.150 What special information do we provide on reports of unclaimed personal property?**

On reports of unclaimed personal property, you must provide the report or case number assigned by your agency, property description and location, and indicate the property as unclaimed and the estimated fair market value.

**§ 102–41.155 Is unclaimed personal property available for transfer to another Federal agency?**

Yes, unclaimed personal property is available for transfer to another Federal agency, but only after 30 calendar days from the date of finding such property and no claim has been filed by the former owner, and with fair market value reimbursement from the recipient agency. The transferred property then loses its identity as unclaimed property and becomes property of the Government, and when no longer needed it must be reported excess in accordance with part 102–36 of this subchapter B.

**§ 102–41.160 May we retain the reimbursement from transfers of unclaimed personal property?**

No, you must deposit the reimbursement from transfers of unclaimed personal property in a special account for a period of 3 years pending a claim from the former owner. After 3 years, you must deposit these funds into miscellaneous receipts of the U.S. Treasury.

**§ 102–41.165 May we require reimbursement for the costs incurred in the transfer of unclaimed personal property?**

Yes, you may require reimbursement from the recipient agency of any direct costs you incur in the transfer of the unclaimed property (e.g., storage, packing, preparation for shipping, loading, and transportation).

**§ 102–41.170 Is unclaimed personal property available for donation?**

No, unclaimed personal property is not available for donation because reimbursement at fair market value is required.

**§ 102–41.175 May we sell unclaimed personal property?**

Yes, you may sell unclaimed personal property after title vests in the Government (as provided for in § 102–41.120) and when there is no Federal interest. You may sell unclaimed personal property subject to the same terms and conditions as applicable to surplus personal property and in accordance with part 102–38 of this subchapter B.

**§ 102–41.180 May we retain the proceeds from the sale of unclaimed personal property?**

No, you must deposit proceeds from the sale of unclaimed personal property in a special account to be maintained for a period of 3 years pending a possible claim by the former owner. After the 3–year period, you must deposit the funds in the U.S. Treasury as miscellaneous receipts or in such other agency accounts when specifically provided by statute.

## Subpart E—Personal Property Requiring Special Handling

**§ 102–41.185 Are there certain types of forfeited, voluntarily abandoned, or unclaimed property that must be handled differently than other property addressed in this part?**

Yes, you must comply with the additional provisions in this subpart when disposing of the types of property listed here.

### Firearms

**§ 102–41.190 May we retain forfeited, voluntarily abandoned, or unclaimed firearms for official use?**

Generally, no, you may retain forfeited, voluntarily abandoned, or unclaimed firearms only when you are statutorily authorized to use firearms for official purposes.

**§ 102–41.195 How do we dispose of forfeited, voluntarily abandoned, or unclaimed firearms not retained for official use?**

Report forfeited, voluntarily abandoned, or unclaimed firearms not retained for official use to the General Services Administration, Property Management Branch (7FP–8), Denver, CO 80225–0506 for disposal in accordance with § 101–42.1102–10 of this title.

**§ 102–41.200 Are there special disposal provisions for firearms that are seized and forfeited for a violation of the National Firearms Act?**

Yes, firearms seized and forfeited for a violation of the National Firearms Act (26 U.S.C. 5801–5872) are subject to the disposal provisions of 26 U.S.C. 5872(b). When there is no contrary judgment or action under such forfeiture, GSA will direct the disposition of the firearms. GSA may—

(a) Authorize retention for official use by the Treasury Department;

(b) Transfer to an executive agency for use by it; or

(c) Order the firearms destroyed.

### Forfeited Distilled Spirits, Wine, and Beer

**§ 102–41.205 Do we report all forfeited distilled spirits, wine, and beer to GSA for disposal?**

(a) Yes, except do not report distilled spirits, wine, and beer not fit for human consumption or for medicinal, scientific, or mechanical purposes. When reporting, indicate quantities and kinds, proof rating, and condition for shipping. GSA (3FPD) may transfer such property to another Federal agency for official purposes, or donate it to eligible eleemosynary institutions for medicinal purposes only.

(b) Forfeited distilled spirits, wine, and beer that are not retained for official use by the seizing agency or transferred or donated to eligible recipients by GSA must be destroyed. You must document the destruction with a record of the time and location, property description, and quantities destroyed.

## Drug Paraphernalia

### § 102–41.210 What are some examples of drug paraphernalia?

Some examples of drug paraphernalia are:

(a) Metal, wooden, acrylic, glass, stone, plastic or ceramic pipes with or without screens, permanent screens, hashish heads, or punctured metal bowls;

(b) Water pipes;

(c) Carburetion tubes and devices;

(d) Smoking and carburetion masks;

(e) Roach clips (objects used to hold burning material, such as a marijuana cigarette, that has become too small or too short to be held in the hand);

(f) Miniature spoons with level capacities of one-tenth cubic centimeter or less;

(g) Chamber pipes;

(h) Carburetor pipes;

(i) Electric pipes;

(j) Air-driven pipes;

(k) Chillums;

(l) Bongs;

(m) Ice pipes or chillers;

(n) Wired cigarette papers; or

(o) Cocaine freebase kits.

### § 102–41.215 Do we report to GSA all forfeited, voluntarily abandoned, or unclaimed drug paraphernalia not required for official use?

No, only report drug paraphernalia that has been seized and forfeited for a violation of 21 U.S.C. 863. Unless statutorily authorized to do otherwise, destroy all other forfeited, voluntarily abandoned, or unclaimed drug paraphernalia. You must ensure the destruction is performed in the presence of two witnesses (employees of your agency), and retain in your records a signed certification of destruction.

### § 102–41.220 Is drug paraphernalia forfeited under 21 U.S.C. 863 available for transfer to other Federal agencies or donation through a State agency for surplus property (SASP)?

Yes, but GSA will only transfer or donate forfeited drug paraphernalia for law enforcement or educational purposes and only for use by Federal, State, or local authorities. Federal or SASP requests for such items must be processed through the General Services Administration, Property Management Branch (3FPD), Washington, DC 20407. The recipient must certify on the transfer document that the drug paraphernalia will be used for law enforcement or educational purposes only.

### § 102–41.225 Are there special provisions to reporting and transferring drug paraphernalia forfeited under 21 U.S.C. 863?

Yes, you must ensure that such drug paraphernalia does not lose its identity as forfeited property. Reports of excess and transfer documents for such drug paraphernalia must include the annotation that the property was seized and forfeited under 21 U.S.C. 863.

### § 102–41.230 May SASPs pick up or store donated drug paraphernalia in their distribution centers?

No, you must release donated drug paraphernalia directly to the donee as designated on the transfer document.

### § 102–41.235 May we sell forfeited drug paraphernalia?

No, you must destroy any forfeited drug paraphernalia not needed for transfer or donation and document the destruction as specified in § 102–41.215.

[FR Doc. 05–6101 Filed 3–28–05; 8:45 am]

BILLING CODE 6820–14–S

---

## DEPARTMENT OF TRANSPORTATION

### Office of the Secretary

### 49 CFR Subtitle A

**[Docket No. OST–2005–20434]**

## Negotiated Rulemaking Advisory Commiteee on Minimum Standards for Driver's Licenses and Personal Identification Cards

**AGENCY:** Office of the Secretary (OST), DOT.

**ACTION:** Notice of meetings of advisory committee.

**SUMMARY:** This document sets forth the schedule for the meetings of the Negotiated Rulemaking Advisory Committee on Minimum Standards for Driver's Licenses and Personal Identification Cards. Pursuant to section 7212 of the Intelligence Reform and Terrorism Prevention Act of 2004, the Office of the Secretary, DOT, is establishing a committee to develop, through negotiated rulemaking procedures, recommendations for minimum standards to tighten the security for driver's licenses and personal identification cards issued by States, in order for these documents to be accepted for use by Federal agencies for any official purpose, including identification, a given time after the final rule goes into effect. The committee will consist of persons who represent the interests affected by the proposed rule, *i.e.*, State offices that issue driver's licenses or personal identification cards, elected State officials, the Departments of Transportation and Homeland Security, and other interested parties.

**DATES:** Meetings of the committee will take place on the dates listed below under **SUPPLEMENTARY INFORMATION**. All meetings are open to the public.

**ADDRESSES:** The committee's meetings will take place at the locations listed below under **SUPPLEMENTARY INFORMATION**.

**FOR FURTHER INFORMATION CONTACT:** Robert C. Ashby, Deputy Assistant General Counsel for Regulation and Enforcement, Office of the General Counsel, at (202) 366–9310 (*bob.ashby@dot.gov*), or Steve Wood, Assistant Chief Counsel for Vehicle Safety Standards and Harmonization, Office of the Chief Counsel, National Highway Traffic Safety Administration, (202) 366–2992 (*steve.wood@nhtsa.dot,gov*). Their mailing addresses are at the Department of Transportation, 400 7th Street, SW, Washington DC, 20590, rooms 10424 and 5219, respectively.

**SUPPLEMENTARY INFORMATION:** On December 17, 2004, the President signed into law the Intelligence Reform and Terrorism Prevention Act of 2004. (Public Law 108–458). Title VII of that Act is known as the 9/11 Commission Implementation Act of 2004 (the 9/11 Act). Subtitle B of the 9/11 Act addresses terrorist travel and effective screening. Among other things, Subtitle B, section 7212, mandates the issuance of minimum standards for State-issued driver's licenses and personal identification cards (Section 7212) that will be accepted by Federal agencies for official purposes.

Section 7212 directs the Department of Transportation to issue rules with the assistance of a negotiated rulemaking advisory committee, composed of representatives of the Departments of Transportation and Homeland Security, State agencies that issue driver's licenses, State elected officials, and other interested parties.

To carry out this requirement, the Department recently published a notice of intent to form this advisory committee, consistent with the standards of the Federal Advisory Committee Act (FACA) and Negotiated Rulemaking Act (NRA). See 70 FR 8756, February 23, 2005. The comment period for this notice extends through March 25, 2005. During the comment period, the Department will file a charter for the committee with the General Services Administration, and the convener will begin contacting potential participants.

After evaluating comments received as a result of the February 23 notice, the Department will issue a notice announcing the establishment and composition of the committee.

The statutory timetable for this rulemaking is short. Section 7212 of the Intelligence Reform and Terrorism Act specifies that the recommendations of the negotiated rulemaking committee must be submitted to the Secretary of Transportation no later than 9 months after the date of enactment, *i.e.*, by September 17, 2005. Section 7212 further specifies that the Secretary must issue a final rule establishing the minimum standards no later than 18 months after the date of enactment, *i.e.*, by June 17, 2006. To meet these deadlines, the Department must begin, in the very near future, a very compressed schedule of regulatory negotiation meetings. The Department has scheduled five meetings on the following dates:

Meeting 1: April 19–21, 2005.
Meeting 2: May 10–13, 2005.
Meeting 3: May 31, June 1–3, 2005.
Meeting 4: June 21–24, 2005.
Meeting 5: July 12–15, 2005.

The meetings will take place in the Department of Transportation headquarters building, 400 7th Street, SW., Washington, DC 20590, in Room 2230. Meetings are scheduled to begin at 9 a.m. and conclude at 5:30 p.m.

The meetings of the committee are open to the public (unless portions of the meeting are held in closed session, as provided under FACA). Attendance will necessarily be limited by the size of the meeting room. Members of the public wishing to attend meetings held in Department of Transportation buildings or other Federal facilities will have to enter through designated security checkpoints.

The visitor entry point for the Department of Transportation headquarters building is in the southwest corner entrance to the building (*i.e.*, the entrance nearest the corner of 7th and E Streets, SW.). Visitors must be escorted into and out of the building. Because it can take some time for large numbers of visitors to process through security, we request that visitors arrive between 8:30 and 8:45 a.m. to undergo the screening process. DOT personnel will then escort groups of visitors to the meeting room. This group escort process will also be followed for persons entering following the lunch break and for persons leaving the building for lunch and at the end of each day's meeting.

As a general matter, the committee will make one hour available for public comments on the Wednesdays of each meeting from 2–3 p.m. Individuals wishing to address the committee should sign up on the public comment sign-in sheet before lunch and the time available will be reasonably divided among those who have signed up, but no one will have more than 15 minutes even if less than 4 people have signed up. Written comments and reports can be given to the facilitator for distribution to the committee members. Persons wanting to present written materials to the committee should make enough copies for all committee members.

The agenda topics for the meetings will include, but not necessarily be limited to, discussion of the following issues:

1. Documentation required as proof of identity of an applicant for a driver's license or personal identification card, including the scope of personal identification cards covered by the requirement.
2. Verifiability of documents used to obtain a driver's license or personal identification card.
3. Processing of applications for driver's licenses and personal identification cards to prevent fraud.
4. Information to be included on each driver's license or personal identification card.
5. Common machine-readable identity information to be included on each driver's license or personal identification card, including defined minimum data elements.
6. Security standards to ensure that driver's licenses and personal identification cards are—(i) resistant to tampering, alteration, or counterfeiting; and (ii) capable of accommodating and ensuring the security of a digital photograph or other unique identifier.
7. Requirement that a State confiscate a driver's license or personal identification card if any component or security feature of the license or identification card is compromised.
8. Requirement that rules facilitate communication between the chief driver licensing official of a State, an appropriate official of a Federal agency and other relevant officials, to verify the authenticity of documents, as appropriate, issued by such Federal agency or entity and presented to prove the identity of an individual.
9. Ensuring that standards do not infringe on a State's power to set criteria concerning what categories of individuals are eligible to obtain a driver's license or personal identification card from that State.
10. Prohibition on requiring a State to comply with any such regulation that conflicts with or otherwise interferes with the full enforcement of State criteria concerning the categories of individuals that are eligible to obtain a driver's license or personal identification card from that State.
11. Prohibition on requiring a single design to which driver's licenses or personal identification cards issued by all States must conform.
12. Procedures and requirements to protect the privacy rights of individuals who apply for and hold driver's licenses and personal identification cards.
13. Assessment of the benefits and costs of the recommendations.

The committee may alter this schedule, including the agenda items. The agenda topics presented in this notice are necessarily very general since the direction and nature of the advisory committee discussions will shape each subsequent meeting. The Department may issue additional notices, as needed, with respect to changes in the schedule or agenda topics.

Issued this 22nd day of March, 2005, at Washington, DC.

**Jeffrey A. Rosen,**

*General Counsel.*

[FR Doc. 05–6167 Filed 3–24–05; 2:43 pm]

BILLING CODE 4910–62–P

## DEPARTMENT OF THE INTERIOR

### Fish and Wildlife Service

### 50 CFR Part 15

**RIN 1018–AH89**

## Importation of Exotic Wild Birds Into the United States; Notice of Reopening of Comment Period on the Proposed Rule To Add Blue-Fronted Amazon Parrots From Argentina's Sustainable-Use Management Plan to the Approved List of Non-Captive-Bred Species

**AGENCY:** Fish and Wildlife Service, Interior.

**ACTION:** Proposed rule; notice of reopening of comment period.

**SUMMARY:** We, the Fish and Wildlife Service (Service), give notice that we are reopening the comment period on the proposed rule to add blue-fronted amazon parrots (*Amazona aestiva*) from Argentina's sustainable-use management plan to the approved list of non-captive-bred (wild-caught) species under the Wild Bird Conservation Act of 1992 (WBCA). We are reopening the public comment period to enter into the record Dr. Jorge Rabinovich's 2004 study, ''Modeling the Sustainable Use of the Blue-Fronted Parrot (*Amazona aestiva*) in the Dry Chaco Region of

Argentina,'' and to accept comments related to the relationship of this study to the proposed addition of blue-fronted amazon parrots from Argentina's program to the approved list of non-captive-bred (wild-caught) species under the WBCA. We invite all interested parties to submit comments on this study as it relates to the proposed action. Comments previously submitted on this proposed action need not be resubmitted as they have already been incorporated into the public record and will be fully considered in any final decision.

**DATES:** We will accept comments until April 28, 2005. We will consider any comments received by that date in the final decision on the proposal.

**ADDRESSES:** If you wish to comment, you may submit your comments and materials by any one of several methods:

1. You may submit written comments and information to Dr. Peter O. Thomas, Chief, Division of Management Authority, U.S. Fish and Wildlife Service, 4401 North Fairfax Drive, Room 700, Arlington, Virginia 22203.

2. You may hand-deliver written comments and information to the Division of Management Authority, at the above address, or fax your comments to 703/358–2298.

3. You may send your comments by electronic mail (e-mail) to *bluefront@fws.gov*. Please submit e-mail comments as an ASCII file, avoiding the use of special characters and any form of encryption. Please also include ''Attention: [blue-fronted amazon]'' and your name and return address in your message. Please note that the e-mail address, *bluefront@fws.gov*, will be closed out at the end of the public comment period.

4. We request that you not submit duplicate comments by multiple means. See **SUPPLEMENTARY INFORMATION** for comment procedures.

To obtain a copy of the aforementioned study, you can download or print it from *http://international.fws.gov* or contact Anne St. John at 703/358–2095 (phone) or 703/358–2298 (facsimile) to receive a faxed or mailed copy.

**FOR FURTHER INFORMATION CONTACT:** Dr. Peter O. Thomas, Chief, Division of Management Authority, U.S. Fish and Wildlife Service; telephone 703/358–2093; fax 703/358–2280.

**SUPPLEMENTARY INFORMATION:**

## Background

The blue-fronted amazon parrot ranges from northeastern Brazil south to Paraguay and northern Argentina. It feeds on fruits and seeds of a wide variety of plants and inhabits a variety of wooded habitats, ranging from subtropical forests to chaco scrub, savanna, and gallery forest. It is closely tied to old-growth areas with large trees that provide nest cavities. The species was included in CITES Appendix II in 1981 when the Order Psittaciformes was listed.

The WBCA limits or prohibits import into the United States of exotic bird species to ensure that their wild populations are not harmed by international trade. It also encourages wild bird conservation programs in countries of origin by ensuring that all imports of such species are biologically sustainable and not detrimental to the survival of the species. On November 16, 1993, we published a final rule in the **Federal Register** (58 FR 60536) in which we informed the public that imports of all CITES-listed birds (as defined in the final rule) were prohibited, except for (a) species included in an approved list; (b) specimens for which an import permit has been issued; (c) species from countries that have approved sustainable-use management plans for those species; or (d) specimens from approved foreign captive-breeding facilities.

On August 6, 2003, we published in the **Federal Register** (68 FR 46559) a rule proposing to approve a sustainable-use management plan developed by the CITES Management Authority of Argentina for blue-fronted amazon parrots under the WBCA. The rule proposed to add blue-fronted amazon parrots from Argentina's program to the approved list of non-captive-bred (wild-caught) species contained in 50 CFR 15.33(b). The public comment period on this proposed rule was open for 60 days, and in our final rule, we will address the comments we received. The purpose of reopening the comment period through the date specified in **DATES** above is to enter into the record Dr. Jorge Rabinovich's 2004 study, ''Modeling the Sustainable Use of the Blue-Fronted Parrot (*Amazona aestiva*) in the Dry Chaco Region of Argentina,'' and any comments we receive regarding the relationship of this study to the proposed addition of blue-fronted amazon parrots from Argentina's program to the approved list of non-captive-bred (wild-caught) species under the WBCA.

## Public Comments Solicited

We request comments or suggestions from the public, other concerned governmental agencies, the scientific community, industry, or any other interested party concerning this study and its relationship to the proposed rule. In making a final decision, we will take into consideration the comments we received and their relationship to the proposed action. Such communications may lead to a final determination that differs from the proposed rule.

The previous comment period on this proposed rule closed on October 6, 2003. To allow all interested parties time to submit their comments for the record, we are reopening the comment period until the date specified above in **DATES**.

Our practice is to make comments, including names and home addresses of respondents, available for public review during regular business hours. Individual respondents may request that we withhold their home address from the rulemaking record, which we will honor to the extent allowable by law. There also may be circumstances in which we would withhold from the rulemaking record a respondent's identity, as allowable by law. If you wish us to withhold your name and/or address, you must state this prominently at the beginning of your comment. However, we will not consider anonymous comments. We will make all submissions from organizations or businesses, and from individuals identifying themselves as representatives or officials of organizations or businesses, available for public inspection in their entirety. Comments and materials received will be available for public inspection, by appointment, during normal business hours at the above address.

## References Cited

Rabinovich, Jorge. 2004. Unpublished report. Centro de Estudios Parasitológicos y de Vectores (CEPAVE), Universidad Nacional de La Plata, La Plata, Prov. de Buenos Aires, Argentina. 147 pp. with figures.

## Author

The primary author of this notice is Anne St. John (see **ADDRESSES** section).

## Authority

The authority for this action is the Wild Bird Conservation Act of 1992 (Pub. L. 102–440, 16 U.S.C. 4901–4916.).

Dated: March 17, 2005.

**Craig Manson,**

*Assistant Secretary—Fish and Wildlife and Parks.*

[FR Doc. 05–6159 Filed 3–28–05; 8:45 am]

BILLING CODE 4310–55–P

**DEPARTMENT OF COMMERCE**

**National Oceanic and Atmospheric Administration**

**50 CFR Part 222**

**[Docket No. 050224044–5044–01; I.D. 092304A]**

**RIN 0648–AS57**

## Sea Turtle Conservation; Exceptions to Taking Prohibitions for Endangered Sea Turtles

**AGENCY:** National Marine Fisheries Service (NMFS), National Oceanic and Atmospheric Administration (NOAA), Commerce.

**ACTION:** Proposed rule; request for comments.

**SUMMARY:** NMFS proposes to allow any agent or employee of NMFS, the U.S. Fish and Wildlife Service (FWS), the U.S. Coast Guard, or any other Federal land or water management agency, or any agent or employee of a state agency responsible for fish and wildlife who, when acting in the course of his or her official duties, is a member of the Sea Turtle Stranding and Salvage Network (STSSN), to take endangered sea turtles encountered in the marine environment if such taking is necessary to aid a stranded endangered sea turtle, or dispose a dead endangered sea turtle, or salvage a dead endangered sea turtle that may be useful for scientific and educational purposes. This action is necessary to provide equal conservation and protection measures to stranded endangered sea turtles as is afforded for threatened sea turtles under 50 CFR 223.206.

**DATES:** Comments on this action are requested, and must be received at the appropriate address, e-mail, or fax number (**ADDRESSES**) by no later than 5 p.m., eastern daylight time, on April 28, 2005.

**ADDRESSES:** Written comments on this action or requests for copies of the draft Environmental Assessment should be addressed to Michael Payne, Chief, Marine Mammal Division, NMFS Office of Protected Resources, 1315 East-West Highway, Silver Spring, MD, 20910; or by fax (301) 427–2522, or by e-mail at: *Seaturtle.STSSN@noaa.gov*.

**FOR FURTHER INFORMATION CONTACT:** Therese Conant, phone: 301–713–1401, fax: 301–427–2523.

**SUPPLEMENTARY INFORMATION:**

### Background

All sea turtles that occur in U.S. waters are listed as either endangered or threatened under the Endangered Species Act (ESA). Kemp's ridley (*Lepidochelys kempii*), leatherback (*Dermochelys coriacea*), and hawksbill (*Eretmochelys imbricata*) sea turtles are listed as endangered. Loggerhead (*Caretta caretta*), green (*Chelonia mydas*), and olive ridley (*Lepidochelys olivacea*) sea turtles are listed as threatened, except for breeding colony populations of green turtles in Florida and on the Pacific coast of Mexico and breeding colony populations of olive ridleys on the Pacific coast of Mexico which are listed as endangered. NMFS and the FWS share jurisdictional responsibility for sea turtles under the ESA. FWS has responsibility in the terrestrial environment and NMFS has responsibility in the marine environment.

Under the ESA and its implementing regulations, taking endangered sea turtles - even incidentally - is prohibited. The ESA allows take of threatened species; however, section 4(d) of the ESA allows NMFS to implement regulations for the conservation of threatened species. NMFS implemented a section 4(d) regulation that extended the take prohibitions to threatened sea turtles with exceptions identified in 50 CFR 223.206. The take of endangered species may be authorized by an incidental take statement pursuant to section 7 or a permit or programmatic permit regulation issued pursuant to section 10 of the ESA.

NMFS implemented regulations (50 CFR 223.206) pursuant to section 4(d) of the ESA to allow appropriate handling of sick, injured, entangled, or dead threatened sea turtles found in the marine environment. Activities related to responding to sick, injured, entangled, and dead turtles have been ongoing for over 30 years and became institutionalized in 1980 with the establishment of the NMFS' STSSN. The STSSN consists of agents or employees of NMFS, the FWS, the U.S. Coast Guard, or any other Federal land or water management agency, or any agent or employee of a state agency responsible for fish and wildlife (hereinafter referred to as the STSSN Responder). Each state participating in the STSSN has an ESA section 6 agreement with the FWS. The FWS grants authority to each cooperating state for permitting land-based activities (i.e., on the beach and in holding facilities) related to the STSSN. FWS also implemented regulations to allow any employee or agent of FWS, NMFS, or a state conservation agency, to aid, dispose, salvage or humanely remove endangered species that constitute a demonstrable threat to human safety (50 CFR 17.21). NMFS currently has ESA section 6 agreements with only 10 states/territories: Florida, Georgia, South Carolina, North Carolina, Maryland, New Jersey, New York, Massachusetts, Puerto Rico, and U.S. Virgin Islands (note: On June 11, 1997, NMFS entered into a Memorandum of Agreement with the California Department of Fish and Game, Office of Oil Spill Prevention and Response to aid sick, injured or stranded sea turtles impacted by oil and other hazardous material spills) . The STSSN encompasses all U.S. states and territories. The ESA does not allow exceptions to takings for endangered species through section 4(d). Therefore, NMFS proposes to grant authority under section 10(a)(1)(A) to provide for the aid, collection, and disposition of, stranded endangered sea turtles found in the marine environment. By definition, the term 'stranded' includes live endangered sea turtles that are sick, injured, or entangled and dead endangered sea turtles found in the marine environment. Because the activities of the STSSN are similar in nature and scope, NMFS proposes to issue a programmatic permit by regulation pursuant to section 10(a)(1)(A). Implementing this section 10(a)(1)(A) action would provide consistency with FWS regulations which allow such activities on land as described in 50 CFR 17.21.

The STSSN was formally established in the southeastern United States and Gulf of Mexico in 1980 and in Hawaii in 1982. The NMFS Southwest Region California Marine Mammal Stranding Network (CMMSN) has responded to sea turtle strandings in California since 1983. Maintaining an active stranding network has been identified in each of the ESA section 4 sea turtle recovery plans developed jointly by FWS and NMFS as a task necessary for the conservation and recovery of listed sea turtles. The purpose of the STSSN is to document dead sea turtles, salvage specimens, and aid sick, injured, or entangled sea turtles that strand in coastal areas under U.S. jurisdiction. State agencies that hold an ESA section 6 agreement with FWS and/or NMFS have designated staff or have developed memorandums of understanding (MOU) with academic institutions or other state-run institutions (e.g., aquaria) to oversee the STSSN. In some cases where NMFS does not have a direct MOU with a STSSN participant within a state, NMFS has applied directly to the FWS to cover STSSN activities (permit number: TED697823–2). The STSSN is organized under a national coordinator

and consists of a coordinator for each state as well as trained volunteers and municipal, state and Federal employees and their designated agents operating under the direction of the state and national coordinator. Each state oversees and is responsible for collecting data under their STSSN program, except for California where NMFS oversees the program. In response to the high number of leatherbacks found entangled in fishing gear (primarily pot gear) along the U.S. northeast Atlantic coast, NMFS established the Northeast Atlantic Coast Sea Turtle Disentanglement Network (STDN) in 2002. The STDN is considered a component of the larger STSSN program, and the NMFS Northeast Regional Office oversees the STDN program.

**Training Requirements for the STSSN**

STSSN Responders are highly experienced personnel who have undertaken extensive training through NMFS and/or state STSSN programs. The U.S. Coast Guard maintains a separate professional training program for responding to events involving protected resources. However, U.S. Coast Guard staff often attend STSSN meetings and training workshops held by states. Individual state STSSNs conduct annual training and refresher workshops for authorized STSSN Responders. STSSN Responders who receive additional training may also perform necropsies on sea turtle carcasses to determine the general state of health prior to death, sex, and document any abnormalities that may have contributed to the mortality of the animal. It is particularly important to undertake necropsies during an unexplained mass mortality event. Comprehensive disentanglement guidelines and sea turtle disentanglement tool kits were disseminated to the STSSN in October, 2003. In addition, NMFS holds regular meetings with the state STSSN coordinators to exchange information and develop recommendations for improving the STSSN.

**Reporting Requirements for the STSSN**

The state STSSN programs collect the following information: name and address of observer, date, stranding location, species identification, state of decomposition; description of any obvious wounds, injuries or abnormalities; standard carapace measurements; and disposition. Photographs are taken whenever possible to verify species identification. Data are recorded on standardized report forms which are submitted to the state coordinator and then to the national STSSN coordinator at the NMFS Southeast Fisheries Science Center or the NMFS Pacific Islands Science Center.

For disentanglement events, the following information is collected: name and type of reporting vessel; vessel cell phone number or radio call channel; reporter name and home phone number; date/time of report (and/or sighting event); location (latitude and longitude); description of turtle for species identification; status of turtle (alive or dead); description of entangling gear (rope, line, buoys, colors, ID numbers); location of entangling gear on turtle (head, flippers, single wrap, multiple wraps); description of any visible injuries; and weather/sea conditions at the scene.

NMFS reviews the information collected and submitted through the states in the STSSN on a monthly basis for data quality control and assesses, in coordination with the states, the effectiveness of the program on a yearly basis.

**Types of Activities Conducted Under the STSSN**

Tens of thousands of sea turtles have been reported through the STSSN since its inception. A portion of these reports have been endangered sea turtles found in the marine environment. Cumulatively, from 1993–2002, the STSSN responded to approximately 1,000 endangered sea turtles in the marine environment in the Atlantic Ocean and Gulf of Mexico. The species composition of these events in the marine environment was: 99 leatherbacks, 45 hawksbills, 223 Kemp's ridleys, and 633 green turtles (note: all green turtles are considered endangered because breeding colony origin is largely unknown). Thirty-seven percent of these incidents were live encounters. In Hawaii, for the same time period, approximately 20 endangered sea turtles were responded to in the marine environment. The species composition of these events was approximately split between hawksbill and olive ridleys (note: all olive ridleys are considered endangered because breeding colony origin is largely unknown). Of these events, over half were live encounters. In California, for the same time period, the STSSN responded to 12 endangered sea turtles in the marine environment. The species composition of these events was 4 leatherbacks, 2 olive ridleys, and 6 green turtles. Of the total 12, half were live encounters.

The types of events that render turtles in need of aid in the marine environment are varied and include cold-stunning, disease and health related issues, entanglement in and impingement on commercial and recreational fishing gear, ingestion of pollutants or marine debris, and vessel strikes and other traumatic injuries, including shark attacks. Typically, these events are reported through a NMFS dedicated phone line or through the state's STSSN phone line for reporting sick, injured, entangled or stranded wildlife. Alternately, the STSSN Responder may encounter a turtle in the water when acting in the course of official duties. On rare occasions, a sick, injured or entangled sea turtle is reported by the public and an immediate response is necessary to prevent further injury or death to the turtle. In these rare events, NMFS grants authority and gives specific instructions to the person at the scene to safely and properly aid the sea turtle.

When a turtle is encountered in the water, the STSSN Responder determines whether the turtle is alive or dead. The response protocol is based upon this determination. For live turtles, the treatment is, in part, based upon the circumstances surrounding the event. For example, when water temperatures drop below a certain level, sea turtles can become lethargic or comatose, a condition known as cold-stunning. For these cold stun cases, the most immediate response is to remove the turtle from the water, apply a moisture emollient around the nostrils and eyes to prevent the membranes from drying out, provide a cover for the animal and transport it to a rehabilitation facility for veterinary care. For entanglement events, removal from the water is not always the best response and can result in further injury. The STSSN Responder assesses the amount and type of gear that is involved and examines where and how the turtle is entangled in the gear. The STSSN Responder also looks for injuries associated with the entanglement and observes the turtle's behavior (e.g., lethargic, energetic). Based on the assessment and examination, and given concern for their own safety, the STSSN Responder attempts to remove any gear that can be removed without further injury to the turtle. If the animal can be brought on board a vessel without further injury, the STSSN Responder attempts to remove all external gear and treat the turtle for any associated injuries. If the turtle's injuries are severe, and it is logistically possible, the turtle is transported to shore for transfer to a rehabilitation facility for veterinary care. During transport, the turtle is kept shaded and kept moist. For live turtles

that are not injured but need resuscitation, procedures specified in 50 CFR 223.206(d)(1) are followed. Resuscitation and rehabilitation increases the turtle's chance of survival after being released.

For dead specimens found in the marine environment, the STSSN Responder records data and either leaves the carcass in the water with a mark on the animal or salvages the specimen for further examination or for scientific or educational purposes (for example, data are collected to determine population sex and age structure, and etiology of diseases).

**Summary**

The STSSN was established in response to the need to better understand threats to sea turtles in the marine environment and to provide aid to stranded sea turtles, or dispose of a dead endangered sea turtle, or salvage a dead endangered sea turtle that may be useful for scientific and educational purposes. Maintaining a stranding network is identified as a recovery task in all federal sea turtle recovery plans. The extensive training requirements, comprehensive data collection, and frequent review and evaluation of these programs, satisfy the requirements described for individual directed research permits. Actions taken by stranding and entanglement networks improve survivability of sick, injured, entangled or stranded turtles and improve our knowledge about population structure, the etiology of disease, environmental stressors and manmade threats in the marine environment. The proposed rule would authorize activities that clearly provide a bona fide and desirable benefit to the enhancement and survival of endangered sea turtles.

This proposed rule would not authorize incidental take. The activities described are limited to responding to a sea turtle stranding or death that has occurred incidental to a human activity and responding to a stranding or death due to natural causes. NMFS is requesting comment on this proposed action. Copies of the draft Environmental Assessment are available (see **ADDRESSES**).

**Classification**

This proposed rule has been determined to be not significant for purposes of Executive Order 12866.

This action does not contain new reporting or recordkeeping requirements.

This proposed rule does not duplicate, overlap or conflict with other Federal rules.

This proposed rule does not limit state policymaking or preempt state law and, therefore, does not contain policies with federalism implications under Executive Order 13132.

The Assistant General Counsel for Legislation and Regulation of the Department of Commerce certified to the Chief Counsel for Advocacy of the Small Business Administration that this proposed rule, if adopted, will not have a significant economic impact on a substantial number of small businesses, organizations, or governments pursuant to the Regulatory Flexibility Act, 5 U.S.C. 601 *et seq.* Activities authorized under this proposed rule authorize a suite of activities that may be taken at the discretion of the STSSN Responder. Proscriptive activities are limited to safe handling protocols for live sea turtles described at 50 CFR 223.206(d)(1). These protocols were most recently updated and authorized through separate rulemaking (66 FR 67495, December 31, 2001). The activities authorized under this proposed rule will only affect STSSN Responders and will not constitute any additional burden to small businesses, organizations, or governments.

Dated: March 23, 2005.

**Rebecca Lent,**

*Deputy Assisstant Administrator for Regulatory Programs, National Marine Fisheries Service.*

**List of Subjects in 50 CFR Part 222**

Administrative practice and procedure, Endangered and threatened species, Exports, Imports, Reporting and recordkeeping requirements.

For the reasons set forth in the preamble, 50 CFR part 222 is proposed to be amended as follows:

## PART 222—GENERAL ENDANGERED AND THREATENED MARINE SPECIES

1. The authority citation for 50 CFR part 222 continues to read as follows:

**Authority:** 16 U.S.C. 1531 *et seq.*; 16 U.S.C. 742a *et seq.*; 31 U.S.C. 9701.

2. In subpart C, § 222.310 is added to read as follows:

### § 222.310 Permit authority for designated agents and employees of specified Federal and state agencies.

(a) This section constitutes a programmatic permit, pursuant to 16 U.S.C. 1539(a)(1)(A), that authorizes activities by agents and employees of Federal and state agencies, as described in paragraph (b) of this section, to aid stranded endangered sea turtles, and to salvage, collect data from, and dispose of, dead carcasses of endangered sea turtles in the marine environment. For purposes of this section, 'stranded' means endangered sea turtles, in the marine environment, that are alive but sick, injured, or entangled.

(b) If any member of any endangered species of sea turtle is found stranded or dead in the marine environment, any agent or employee of the National Marine Fisheries Service, the Fish and Wildlife Service, the U.S. Coast Guard, or any other Federal land or water management agency, or any agent or employee of a state agency responsible for fish and wildlife who is designated by his or her agency for such purposes, may, when acting in the course of his or her official duties, take such endangered sea turtles if such taking is necessary to aid a stranded sea turtle, or dispose of or salvage a dead sea turtle, or collect data from a dead sea turtle which may be useful for scientific and educational purposes. Live turtles will be handled as described in § 223.206(d)(1). Whenever possible, live sea turtles shall be returned to their aquatic environment as soon as possible. The following data collection activities for live turtles while they are in the marine environment are allowed:

(1) Turtles may be flipper and passive integrated transponder (PIT) tagged, prior to release. Flipper tags would be applied to the trailing edge of either the front or rear flippers with standard tagging applicators after the tagging area has been cleaned with alcohol or iodine solution. PIT tags would be subcutaneously inserted after cleaning the insertion site with alcohol or iodine solution. Before application of flipper tags or insertion of PIT tags all flippers and the neck/shoulder area will be examined and scanned for the presence of any pre-existing flipper or PIT tags.

(2) Turtles may also be weighed, measured, and photographed prior to release.

(c) Every action shall be reported in writing to the Assistant Administrator, or authorized representative, via the agency or institution designated by the state to record such events. Reports shall contain the following information:

(1) Name and position of the official or employee involved;

(2) Description of the sea turtle(s) involved including species and condition of the animal;

(3) When applicable, description of entangling gear, its location on the turtle, and the amount of gear left on the turtle at release;

(4) Method, date and location of disposal of the sea turtle(s), including, if applicable, where the sea turtle(s) has been retained in captivity; and

(5) Such other information as the Assistant Administrator, or authorized representative, may require.

[FR Doc. 05–6187 Filed 3–28–05; 8:45 am]

BILLING CODE 3510–22–S

## DEPARTMENT OF COMMERCE

## National Oceanic and Atmospheric Administration

## 50 CFR Part 648

**[Docket No. 050314072–5072–01; I.D. 030705D]**

**RIN 0648–AS33**

## Fisheries of the Northeastern United States; Northeast (NE) Multispecies Fishery; Framework Adjustment 40–B (FW 40B)

**AGENCY:** National Marine Fisheries Service (NMFS), National Oceanic and Atmospheric Administration (NOAA), Commerce.

**ACTION:** Proposed rule; request for comments.

**SUMMARY:** NMFS proposes regulations to implement measures in FW 40B to the NE Multispecies Fishery Management Plan (FMP). FW 40B was developed by the New England Fishery Management Council (Council) to modify existing effort control programs implemented under Amendment 13 to the FMP to improve the effectiveness of these programs and to create additional opportunities for commercial fishing vessels in the fishery to target healthy groundfish stocks. In addition, this action includes measures that would increase the information available to assess groundfish bycatch in the herring fishery.

**DATES:** Comments must be received on or before April 18, 2005.

**ADDRESSES:** You may submit comments by any of the following methods:

- E-mail: *FW40B@NOAA.gov*. Include in the subject line the following: ''Comments on the Proposed Rule for Groundfish Framework 40B.''
- Federal e-Rulemaking Portal: *http://www.regulations.gov*.
- Mail: Paper, disk, or CD-ROM comments should be sent to Patricia A. Kurkul, Regional Administrator, National Marine Fisheries Service, One Blackburn Drive, Gloucester, MA 01930. Mark the outside of the envelope, ''Comments on the Proposed Rule for Groundfish Framework 40B.''
- Fax: (978) 281–9135.

Copies of FW 40B, its Regulatory Impact Review (RIR), Initial Regulatory Flexibility Analysis (IRFA), and the Environmental Assessment (EA) are available from Paul J. Howard, Executive Director, New England Fishery Management Council, 50 Water Street, The Tannery - Mill 2, Newburyport, MA 01950.

Written comments regarding the burden-hour estimates or other aspects of the collection-of-information requirements contained in this rule should be submitted to the Regional Administrator at the address above and to David Rostker, Office of Management and Budget (OMB), by e-mail at *David_Rotsker@omb.eop.gov*, or fax to (202) 395–7285.

**FOR FURTHER INFORMATION CONTACT:** Douglas W. Christel, Fishery Policy Analyst, (978) 281–9141, fax (978) 281–9135.

**SUPPLEMENTARY INFORMATION:**

### Background

The Council developed Amendment 13 in order to bring the FMP into conformance with all Magnuson-Stevens Fishery Conservation and Management Act (Magnuson-Stevens Act) requirements, including ending overfishing and rebuilding all overfished groundfish stocks. Amendment 13 was partially approved by the Secretary of Commerce on March 18, 2004. A final rule implementing the approved measures in the amendment was published April 27, 2004 (69 FR 22906) and became effective May 1, 2004. Amendment 13 contained a suite of management measures to reduce fishing mortality on stocks that are either overfished, or where overfishing is occurring. For several stocks, the mortality targets adopted in Amendment 13 represented substantial reductions from the previous levels. For other stocks, the Amendment 13 mortality targets were at or above previous levels. Because of the mixed-stock nature of the NE multispecies fishery, management measures to reduce mortality on overfished stocks adopted in Amendment 13 are expected to reduce fishing mortality more than is necessary on other, healthy stocks. As a result, yield from healthy stocks may be sacrificed and the FMP may not provide for the fishery to harvest the optimum yield (OY), the amount of fish that will provide the greatest overall benefit to the Nation, from all stocks managed under the FMP for a given year.

Amendment 13 categorized the DAS allocated to each NE multispecies permit as Category A, B (Regular), B (Reserve), or C DAS. Category A DAS can be used to target any regulated groundfish stock, while Category B DAS are to be used only to target healthy groundfish stocks. Category C DAS cannot be used unless authorized some time in the future. The regulations implementing Amendment 13 created one opportunity to use Category B DAS: A SAP designed to target GB yellowtail flounder in CA II. Framework Adjustment 40A (FW 40A), implemented November 19, 2004 (69 FR 67780), provided additional opportunities to use Category B DAS by creating two SAP's to target GB haddock and a pilot program designed for using Category B (Regular) DAS outside of a SAP (i.e., the Regular B DAS Pilot Program). These programs are intended to allow vessels to target healthy groundfish stocks without compromising the rebuilding programs of other groundfish stocks, thus enabling the industry to harvest OY from the healthy stocks.

Since the implementation of Amendment 13 and submission of FW 40A, several issues have been raised concerning the overall approach to controlling effort. The primary purpose of FW 40B is to improve the effectiveness of the Amendment 13 effort control program, including the opportunities developed to target healthy stocks and other measures to facilitate adaptation to the Amendment 13 effort reductions.

### Proposed Measures

FW 40B proposes 12 specific management measures, as described here.

1. DAS Transfer Program Modifications

Amendment 13 created a DAS Transfer Program, which allows for the permanent exchange of DAS between vessels with limited access NE multispecies permits. Exchanges of DAS through this program are subject to a number of restrictions that govern which vessels can exchange DAS, and what happens to the other permits of the vessel that is selling its DAS to another vessel. As adopted in Amendment 13, Category A and B DAS that are permanently exchanged through the DAS Transfer Program are reduced by 40 percent, while Category C DAS are reduced by 90 percent. This reduction in DAS exchanged through the DAS Transfer Program is commonly referred to as a conservation tax. FW 40B would reduce the conservation tax on Category A or B DAS that are permanently exchanged through the DAS Transfer Program to 20 percent. The conservation tax on Category C DAS exchanged under this program would not be affected by this action.

Under the existing DAS Transfer Program regulations, vessels involved in

selling and purchasing DAS must have permit baseline characteristics for length, horsepower, and gross tonnage that fall within the current size restrictions (i.e., the baseline characteristics of the vessel receiving DAS must be within 10 percent of the baseline length and gross tonnage, and within 20 percent of the baseline horsepower of the transferring vessel). The proposed action would remove the requirement that vessels transferring DAS must fall within the tonnage permit upgrade restrictions (i.e., the requirement that the vessel receiving DAS must be within 10 percent of the tonnage of the vessel selling the DAS). This action would make the size restrictions for the DAS Transfer Program consistent with the DAS Leasing Program.

The proposed provisions included in FW 40B are intended to make the DAS Transfer Program more attractive to vessels and facilitate their participation in the Program, which would result in reductions in overall fishing capacity.

2. DAS Leasing Program Modifications

Amendment 13 also implemented a DAS Leasing Program, which allows vessels to temporarily exchange DAS on a yearly basis. In order to lease DAS, the current regulations require that the permits involved in the transaction must have permit baseline characteristics for length and horsepower that fall within the current size restrictions (i.e., the baseline characteristics of the vessel receiving leased DAS must be within 10 percent of the baseline length and 20 percent of the baseline horsepower of the lessor vessel). The vessel baseline characteristics used for the DAS Leasing Program are the vessel baseline characteristics on file with NMFS as of January 29, 2004, the date of publication of the proposed rule for Amendment 13. In general, permits with smaller baseline characteristics have a larger pool of candidates with which to exchange DAS under the DAS Leasing Program.

Some permit holders have placed permits on vessels with physical characteristics that are smaller than the baseline characteristics of the permit. These vessels are, therefore, limited in the number of vessels that can be candidates for leasing DAS because they can only lease DAS that match up with the larger baseline. The proposed action would allow permit holders a one-time opportunity to downgrade the permit baseline characteristics for the DAS Leasing Program, established as of January 29, 2004, to the physical characteristics of the vessel currently using the permit. This one-time downgrade would only apply to the DAS Leasing Program permit baseline and would not affect any other permit baselines currently specified for the permit (i.e., the baseline used for vessel upgrades or replacements). In effect, if a permit holder were to exercise this option, the permit would have two NE multispecies permit baselines: One for the DAS Leasing Program and another that applies to all other permit transactions (vessel upgrades or replacements or the DAS Transfer Program). If the permit were moved to another vessel during a vessel replacement, the downgraded DAS Leasing Program baseline would revert to the original DAS Leasing Program baseline established on January 29, 2004, and could not be downgraded again for the purposes of the DAS Leasing Program. This downgraded DAS Leasing Program baseline would remain valid until the permit is placed on a replacement vessel as specified above, or until the DAS Leasing Program expires.

3. Changes to Incidental TAC's

FW 40A implemented several programs that allow vessels to use Category B DAS to target healthy groundfish stocks without compromising the rebuilding of groundfish stocks of concern (i.e., those stocks that are currently overfished and/or are subject to overfishing). In order to limit the potential increase in fishing mortality resulting from the use of Category B (Regular and Reserve) DAS, FW 40A implemented incidental TAC amounts for each groundfish stock of concern caught by programs that allow the use of Category B DAS.

This action would modify several of the incidental TAC's established under FW 40A. First, this action would set aside up to 10 percent of the GB cod incidental TAC to allow for experimental fishing/research. This would create a research set-aside of 9.7 mt of GB cod for the 2005 fishing year and a 12.7 mt GB cod set-aside for the 2006 fishing year. Researchers could apply for this research TAC by submitting an application to the Regional Administrator by May 1. Since measures approved under FW 40B are not likely to be implemented before May 1, 2005, for the 2005 fishing year, applications would be required to be received by August 1, 2005. If no applications to use this TAC are received, the research setaside TAC of GB cod would be allocated among approved programs using Category B DAS and subject to an incidental TAC for GB cod. If applications received by May 1, do not require the entire research setaside TAC of GB cod, the remaining setaside TAC would be distributed to the Regular B DAS Pilot Program.

As described in further detail below, FW 40B would implement a new SAP that would allow limited access NE multispecies vessels to target haddock in the WGOM Closure Area. In order to limit the potential fishing mortality on GOM cod from this SAP, this action would set an incidental TAC for GOM cod at 5 percent of the overall incidental catch TAC for GOM cod implemented under FW 40A. This would result in an incidental GOM cod TAC for the WGOM Closure Area Rod/Reel Haddock SAP of 6.3 mt for the 2005 fishing year and 7.5 mt for the 2006 fishing year. This percentage could be changed through a future management action.

4. WGOM Closure Area Rod/Reel SAP

FW 40B proposes a new SAP that would allow all limited access NE multispecies vessels to target haddock in the WGOM Closure Area using hand-operated rod-and-reel gear. Vessels issued a limited access NE multispecies permit and subject to the DAS requirements could use Category A or B (Regular or Reserve) DAS to fish in this SAP. DAS would be charged beginning when the vessel crosses the Vessel Monitoring System (VMS) demarcation line when starting a trip into the SAP, and ending when the vessel crosses the VMS demarcation line on its return to port. Vessels issued a limited access Handgear A or a Small Vessel exemption permit and not subject to the DAS requirements could also participate in this SAP without the use of DAS. Vessels fishing with bait would be required to use circle hooks, and any jigs used in this SAP could not have treble hooks.

The SAP would only be authorized for 2 months, March and April, and would expire 2 years after implementation, unless extended by the Regional Administrator. The Regional Administrator would extend this SAP if the monitoring and enforcement provisions prove sufficient to reliably document the catch of cod and haddock, if the cod and haddock TAC's specified for this SAP are not exceeded during each year of implementation; and the ratio of cod to haddock catch is less than 1:2 by weight. The total catch (kept and discarded) of GOM haddock would be limited to 50 mt, while the catch of GOM cod would be limited to five percent of the GOM cod incidental catch TAC (6.3 mt and 7.5 mt for the 2005 and 2006 fishing years, respectively). This SAP would close once the Regional Administrator projects that either the

GOM haddock or GOM cod TAC specified for this SAP has been caught. In addition, the Regional Administrator could close this SAP if the catch of cod to haddock exceeds a ratio of 1:2, by weight.

In order to enable the NMFS Observer Program to deploy the appropriate amount of observers to accurately monitor catch in this SAP, a vessel intending to participate in this SAP would be required to notify the NMFS Observer Program by telephone at least 72 hours prior to leaving port. Vessels would be required to provide the following information: Vessel name; contact name for coordination of observer deployment; telephone number of contact; and date, time, and port of departure.

All vessels participating in this SAP would be required to use an approved VMS. Vessels would be required to declare their intent to fish in this SAP via VMS and specify the type of DAS that would be used, if appropriate, prior to leaving port on a trip into the SAP. Once declared into this SAP, vessels would not be allowed to fish in any other area on the same trip. Vessels would be required to submit daily catch reports via VMS specifying the amount of haddock caught and discarded and the amount of cod discarded. Vessels would be subject to the landing limits for haddock and other species as specified in the regulations. All cod caught would have to be discarded.

Vessels with a limited access NE multispecies DAS permit that elect to fish in this SAP would be required to participate in this SAP for a minimum of 7 days by obtaining a letter of authorization from the Regional Administrator. While enrolled to participate in this SAP, limited access NE multispecies DAS vessels would not be allowed to fish for groundfish or monkfish, including setting gear capable of catching groundfish or monkfish, in any other area.

5. CA II Yellowtail Flounder SAP

Amendment 13 created a SAP to target GB yellowtail flounder in the southern half of CA II from June 1 through December 31. A total of 320 trips was authorized, with vessels limited to two trips per month. The possession limit for yellowtail flounder was set at 30,000 lb (13,608 kg) per trip.

This SAP is regulated by the maximum number of trips and by the availability of the GB yellowtail flounder TAC allocated to the U.S./Canada Management Area. During the 2004 fishing year, the total number of trips allowed into this SAP was used by September 3, 2004, prompting NMFS to close the SAP for the remainder of the fishing year (69 FR 54593, September 9, 2004). In addition, the high rate of GB yellowtail flounder caught in this SAP triggered reductions in the GB yellowtail flounder trip limit and the eventual closure of the Eastern U.S./Canada Area by October 1, 2004 (69 FR 59815, October 6, 2004). This area has since been reopened under a restrictive GB yellowtail flounder trip limit of 15,000 lb (6,804 kg) per trip (70 FR 2820, January 18, 2005), which was then reduced to 5,000 lb (2,268 kg) per trip (70 FR 7050, February 10, 2005).

FW 40B would modify this SAP by changing the start date for the SAP and enabling the Regional Administrator to adjust SAP provisions to adapt to changing stock and fishery conditions. Specifically, this action would change the start date for this SAP from June 1 to July 1. June is a spawning month for yellowtail flounder on GB and the fish are in relatively poor condition and bring low prices during that period. In addition, FW 40B would limit vessels to one trip per month, reduce the possession limit to 10,000 lb (4,536 kg), and establish criteria by which the Regional Administrator may set the GB yellowtail flounder landing limit (not to exceed 30,000 lb (13,608 kg)) and the total number of trips into this SAP based upon the amount of GB yellowtail flounder TAC (set in accordance with the U.S./Canada Resource Sharing Understanding) and the amount of GB yellowtail flounder caught outside of the SAP.

Using specific criteria, a formula was developed in FW 40B to assist the Regional Administrator in determining the appropriate number of trips for this SAP on a yearly basis. The suggested formula offered by the Council is as follows: Number of trips = (GB yellowtail flounder TAC - 4,000 mt)/4.54 mt. Note that 4.54 mt is equivalent to 10,000 lb. This formula assumes that approximately 4,000 mt of GB yellowtail flounder would be caught by vessels operating in the U.S./Canada Management Area outside of the CA II Yellowtail Flounder SAP. FW 40B would authorize the Regional Administrator to not allow any trips into this SAP if the available GB yellowtail flounder catch (i.e., the GB yellowtail flounder TAC - 4,000 mt) is not sufficient to support 150 trips with a 15,000–lb (6,804–kg) GB yellowtail flounder trip limit. Based on the preliminary GB yellowtail flounder TAC recommended by the Transboundary Management Guidance Committee and the Council for the 2005 fishing year (4,260 mt), and using the formula proposed in FW 40B to determine the appropriate number of trips for fishing year 2005, there would be insufficient GB yellowtail flounder TAC to support the CA II Yellowtail Flounder SAP for the 2005 fishing year.

These measures are intended to allow the SAP to be adjusted for changing stock conditions to help achieve OY for GB yellowtail flounder. These changes would help increase product quality by beginning the SAP after the spawning season and help reduce the possibility that a derby fishery would occur, resulting in low prices and an early closure of the Eastern U.S./Canada Area.

6. Minimum Effective Effort Allocation

Amendment 13 categorized the DAS allocated to each permit based on recent fishing history. Under Amendment 13, about 400 vessels did not receive any Category A or B DAS, and thus have no opportunity to fish for groundfish with their limited access permit. The proposed action would re-categorize 10 Category C DAS as Category B (Reserve) DAS for these permits. These DAS can only be used in approved SAP's that do not have a DAS flipping requirement. Only the WGOM Closure Area Rod/Reel Haddock SAP as proposed in FW 40B would not have a DAS flipping requirement. Therefore, vessels allocated 10 Category B (Reserve) DAS under this proposed action would only be able to participate in the WGOM Closure Area Rod/Reel Haddock SAP, if approved.

7. GB Cod Hook Sector Revisions

Amendment 13 established the GB Cod Hook Sector and allocated GB cod to the Sector based on the history of the Sector participants. As implemented, only permitted vessels with a past history of using hook gear can join the Sector, and only GB cod landed using hook gear is used to determine the Sector's GB cod allocation. The proposed action would modify these requirements by allowing any vessel to join the Sector and allow all GB cod landings of Sector participants, regardless of gear, to be used to determine the Sector's GB cod allocation. Sector participants are required to use hook gear once in the Sector. The maximum share of the GB cod TAC that the Sector could obtain would remain 20 percent of the overall GB cod TAC.

8. DAS Credit for Standing By Entangled Whales

Rescue teams that attempt to free entangled whales are often frustrated by an inability to relocate the whale after the initial report. In order to encourage fishing vessels to report entangled

whales, the proposed action would provide a mechanism for a limited access groundfish vessel to obtain DAS credit for the time spent standing by an entangled whale. Vessels requesting such a credit would be required to notify the USCG and the appropriate organization of the entangled whale (currently, the Center for Coastal Studies); remain in contact with the Center for Coastal Studies; be available to answer questions on the condition of the animal, including, but not limited to, possible species identification, severity of entanglement, and gear entangling the animal; and request the Regional Administrator to issue a DAS credit.

9. Herring Vessel Interactions With Regulated Groundfish

Recent reports of the catch of regulated groundfish by herring fishing vessels (most notably mid-water trawl vessels) have prompted an interest in gaining a better understanding of the scope of this problem. To date, very few data are available to adequately document groundfish bycatch from the herring fishery. The proposed action would require vessels with a Category I herring permit that intend to fish in the GOM or GB RMA's to notify the NMFS Observer Program at least 72 hours before beginning a trip. In addition, if an observer is not provided for the trip, the vessel must notify NMFS Office of Law Enforcement via VMS of the time and place of landing prior to crossing the VMS demarcation line on returning to port. These provisions are intended to improve the ability to place an observer on herring vessels to monitor groundfish bycatch.

10. Trip Gillnet Net Limitations

Prior to May 1, 2002, Trip gillnet vessels did not have a regulatory limit on the number of nets that could be fished, but rather were limited by the number of nets that could be physically carried on board the vessel. Effort was thus limited by the size of the vessel, as well as the number of DAS allocated to that vessel, similar to the approach used for trawl gear. Net limits were first adopted for Trip gillnet vessels under the interim regulations implemented on August 1, 2002 (67 FR 50292) in response to the Settlement Agreement in the case *Conservation Law Foundation, et al.*, v. *Evans*. Amendment 13 revised the number of nets that could be carried aboard and fished, but did not remove the new limit completely. The proposed action would remove the limit on the number of nets that could be carried onboard by Trip gillnet vessels, because this measure is now considered unnecessary. Thus, this measure would restore the net limits for Trip gillnet vessels that were in place prior to the Settlement Agreement. In doing so, this action would also remove the tagging requirements for Trip gillnet vessels.

11. Dumping Prohibition for Vessels Under a Category B DAS

FW 40A implemented two programs (the Eastern U.S./Canada Haddock SAP Pilot Program and the Regular B DAS Pilot Program) that allow vessels to use Category B DAS to target healthy groundfish stocks without compromising the rebuilding objectives of the FMP. To minimize the mortality on stocks of concern from vessel activities in these new programs, as well as the CA II Yellowtail Flounder SAP implemented under Amendment 13, FW 40A implemented measures that prohibit vessels from discarding legal-sized cod and other regulated groundfish when fishing under a Category B DAS. These measures also require vessels to initiate a DAS flip (i.e., change the category of DAS used on that trip to Category A DAS) if vessels harvest more legal-sized cod or other regulated groundfish than the applicable maximum landing limits per trip under a Category B DAS. The current regulations, however, do not explicitly address whether dumping the contents of a net before bringing the net on board constitutes discarding. Through this action, NMFS proposes to implement an explicit measure to clarify that dumping of the contents of a net when operating under a Category B DAS in the CA II Yellowtail Flounder SAP, the Eastern U.S./Canada Haddock SAP Pilot Program, or the Regular B DAS Pilot Program is prohibited because it is considered to be discarding as defined at 50 CFR 600.10.

12. Corrections

In addition to the proposed measures described here, the following changes are proposed to correct inaccurate references in the regulations. The proposed changes listed below are in the order in which they currently appear in the regulations.

In § 648.10, the periods ending paragraphs (b)(1)(vi) and (b)(1)(vii) would be corrected to semicolons.

In § 648.14, the reference to the restrictions and conditions for the CA II Yellowtail Flounder SAP in paragraph (a)(136) would be expanded to include § 648.85(b)(3)(xi).

In § 648.14, under paragraph (a)(139), the reference to the number of trips specified under § 648.85(b)(3)(vii) would be expanded to include the monthly trip limits for vessels specified in § 648.85(b)(3)(vi).

In § 648.82, paragraphs (k)(4)(ix) and (l)(1)(ii) would be revised to clarify that vessels can lease or transfer DAS to a vessel with a baseline length overall and horsepower that is no more than 10 percent and 20 percent greater than the baseline length overall and horsepower of the lessor or transferor vessel, respectively. This revision would correct the regulations to maintain consistency with the intent of Amendment 13 as outlined in the FSEIS.

**Request for Comments**

The public is invited to comment on any of the measures proposed in this rule. NMFS is especially interested in receiving comments on several proposed measures for which the agency has concern, particularly regarding whether these measures are consistent with achieving the objectives of the FMP and the fishing mortality reduction objectives established in Amendment 13, whether there is sufficient analysis in the EA to support the proposed measures, and whether there are equity concerns involving specific measures. The reasons for these concerns are described below:

*WGOM Closure Area Rod/Reel Haddock SAP*

FW 40B proposes to implement a SAP in the WGOM Closure Area. Amendment 13 states that the purpose of a SAP is to enable vessels to target regulated groundfish while minimizing impacts of fishing on overfished stocks. The proposed WGOM Closure Area Rod/Reel Haddock SAP would allow rod/reel vessels to target GOM haddock in the WGOM Closure Area while minimizing the bycatch of GOM cod (GOM cod is currently considered overfished). However, the analysis in the EA, based on the best scientific information available, indicates that rod/reel vessels may not be able to target GOM haddock in the WGOM Closure Area without also catching substantial amounts of GOM cod. In addition, available catch information used for this analysis is not consistent with vessel operations as proposed in FW 40B. Although this action proposes several measures that would limit the potential impact of this SAP (e.g., limited season, 2–year pilot program duration, small incidental cod TAC, and the authority for the Regional Administrator to close this SAP, etc.), there may not be sufficient data to justify this SAP given the Amendment 13 objective to minimize bycatch and the potential impacts of SAP's on overfished stocks.

Furthermore, the WGOM Closure Area Rod/Reel Haddock SAP appears to represent substantial administrative and industry burdens without significant benefits to the fishery.

*GB Cod Research Set-aside*

FW 40B proposes to set aside up to 10 percent of the GB cod incidental catch TAC to facilitate research. This TAC would be distributed to research proposals submitted to NMFS by May 1 of every year. However, the FW 40B document does not specify criteria for determining which proposals should be allocated this setaside research TAC. Further, the document does not describe a mechanism by which this TAC should be distributed to researchers. Without sufficient detail about how to administer this provision, including the process and mechanism by which proposals to use the GB incidental cod TAC research set-aside will be considered and TAC distributed, there may not be sufficient information to implement this provision.

*Minimum Effective Effort Allocation*

FW 40B would re-categorize 10 Category C DAS to Category B Reserve DAS for any vessel allocated zero Category A or B (Regular and Reserve) DAS under Amendment 13. This would result in approximately 400 vessels with a minimum of 10 Category B Reserve DAS. However, there are a number of vessels that have been allocated Category A and B (Regular and Reserve) DAS under Amendment 13, but were allocated less than 10 Category B Reserve DAS. Therefore, not every vessel in the NE multispecies fishery would have an equal minimum number of Category B Reserve DAS under this provision. NMFS raises this issue due to concerns over whether this provision is fair and equitable as required under National Standard 4 of the Magnuson-Stevens Act.

Finally, NMFS specifically invites comments on whether NMFS should post vessels' DAS allocation information on the Northeast Regional Office website for the purposes of facilitating participation in the DAS Leasing/Transfer Programs.

**Classification**

At this time, NMFS has not determined that the framework adjustment that this proposed rule would implement is consistent with the national standards of the Magnuson-Stevens Act and other applicable laws. NMFS, in making that determination, will take into account the data, views, and comments received during the comment period.

This proposed rule has been determined to be not significant for the purposes of Executive Order (E.O.) 12866.

This proposed rule does not contain policies with Federalism or ''takings'' implications as defined in E.O. 13132 and E.O. 12630, respectively.

NMFS prepared an IRFA as required by section 603 of the Regulatory Flexibility Act (RFA). The IRFA describes the economic impact this proposed rule, if adopted, would have on small entities. A description of the action, why it is being considered, and the legal basis for this action are contained in the preamble to this proposed rule and in the Executive Summary and Section 3.2 of FW 40B.

As described above, the proposed action would implement one new SAP and modify existing effort control programs implemented under Amendment 13 to help mitigate the economic impacts resulting from effort reductions in Amendment 13 and to improve the effectiveness of these effort control programs, respectively. The proposed alternative was compared to the No Action alternative and four other non-selected alternatives. In this analysis, the baseline (No Action alternative) is the set of measures currently in place for the NE multispecies fishery through the November 19, 2004, implementation of measures contained in FW 40A. The non-selected alternatives contained in FW 40B include various combinations of the measures proposed in this action, as well as other provisions that are not included in the proposed alternative. The provisions in these non-selected alternatives that are not included in the proposed alternative are described in further detail below.

*Description of and Estimate of the Number of Small Entities to Which the Proposed Rule Would Apply*

The proposed action would affect any vessel currently issued a limited access NE multispecies permit, vessels issued a Category 1 herring permit, and researchers interested in conducting research impacting GB cod. Currently, there are approximately 1,500 vessels issued a limited access NE multispecies permit and 105 vessels issued a Category 1 herring permit. However, it is very unlikely that every vessel issued a limited access NE multispecies permit or a Category 1 herring permit would be affected by this proposed action because of past and recent participation in the fishery, the voluntary nature of specific programs proposed in this action, and the associated regulatory and economic cost burdens for some of the proposed provisions. Except for the notification requirements for Category 1 herring vessels, all of the provisions in the proposed rule are voluntary. Therefore, vessels that participate in these programs would likely have determined that the benefits of their participation outweigh costs associated with these programs. Based upon the information in the EA prepared for FW 40B, all 1,500 vessels issued a limited access NE multispecies permit would be eligible to participate in the DAS Leasing and DAS Transfer Programs, up to 91 vessels may participate in the WGOM Closure Area Rod/Reel Haddock SAP, up to 1,409 vessels (i.e., vessels issued a limited access NE multispecies DAS permit) may participate in the CA II Yellowtail Flounder SAP or elect to stand by an entangled whale; and up to 1,351 vessels issued a limited access NE multispecies DAS permit that are currently not members of the GB Cod Hook Sector would be eligible to enter the GB Cod Hook Sector. Currently, the 53 vessels designated as Trip gillnet vessels would be affected by the removal of the net limit proposed in this action.

The Small Business Administration (SBA) size standard for small commercial fishing entities is $ 3.5 million in gross receipts and would apply to limited access NE multispecies permit holders and vessels issued a Category 1 herring permit. Data analyzed for Amendment 13 indicated that the maximum gross receipt for any single commercial fishing vessel for the period 1998 to 2001 was $ 1.3 million. Data analyzed in FW 40B indicate that Category 1 herring vessels averaged approximately $1.26 million in gross sales. For this reason, each vessel in this analysis is treated as a single entity for the purposes of size determination and impact assessment. All commercial fishing entities affected by this proposed rule would fall under the SBA size standard for small commercial fishing entities, and there would be no disproportionate impacts between small and large entities.

*Economic Impacts of the Proposed Acton*

The proposed action would reduce the conservation tax for Category A and B DAS exchanged through the DAS Transfer Program to facilitate consolidation of the groundfish fleet through market-based incentives. Currently, Category A and B DAS exchanged through the DAS Transfer Program are subject to a 40 percent conservation tax, while Category C DAS are subject to a 90–percent conservation tax. In addition, the vessel selling its

DAS must exit all fisheries. This action would reduce the conservation tax for Category A and B DAS exchanged to 20 percent, but would retain the 90–percent conservation tax for Category C DAS. This reduction would increase the potential value of a DAS exchanged under the DAS Transfer Program, but it is not known whether the conservation tax itself prohibits vessels from participating in this program. Unless the selling vessel holds no other limited access permits, the selling vessel may not be able to recoup the full value of the permit by selling the NE multispecies DAS alone. This is because the opportunity cost to the seller may be quite high if the vessel is required to retire from all other fisheries. However, overall, this action would be expected to increase the potential return to both buyers and sellers and have a beneficial impact on small entities of uncertain magnitude.

FW 40B would also remove the tonnage criterion for the DAS Transfer Program. This would make the DAS Transfer Program subject to the same baseline size conditions as the DAS Leasing Program. Removal of the tonnage criterion is expected to make it more likely that vessels would be able to find compatible vessels to exchange DAS under the DAS Transfer Program. It is unknown if this provision would facilitate additional DAS transfers, but it is likely that economic impacts from this provision would be positive.

FW 40B proposes to allow vessels a one-time opportunity to downgrade the permit baseline characteristics established for the DAS Leasing Program to reflect the physical characteristics of the vessel currently using the permit. This is expected to increase the potential pool of vessels available to lease DAS. The economic impact of this provision is likely to be positive, though the number of vessels that might downgrade their DAS Leasing Program baseline and the economic value of that downgrade is not quantifiable.

The proposed action would set aside 10 percent of the GB cod incidental catch TAC to facilitate research. In addition, this action would change the allocation of incidental catch TAC's to accommodate the proposed bycatch of GOM cod in the WGOM Closure Area Rod/Reel Haddock SAP. Although this action would reduce the allocation of incidental catch TAC's to the Category B DAS programs implemented under FW 40A (i.e., the Regular B DAS Pilot Program and the approved SAP's), the overall target TAC's for the fishery, and therefore the incidental catch TAC's, would be higher in fishing year 2005 than in fishing year 2004 (as specified in Amendment 13). As a result, despite the reallocation of the incidental catch TAC's, the amount of catch available to the Category B DAS programs would actually increase, thereby increasing the economic opportunities of both the previously approved programs and the SAP proposed under this action.

FW 40B proposes to implement the WGOM Closure Area Rod/Reel Haddock SAP, which would allow all limited access NE multispecies vessels to target haddock in the GOM in fishing years 2005 and 2006. This SAP would help mitigate some of the economic impacts resulting from the effort reductions in Amendment 13 and provide an opportunity for vessels, particularly small vessels in the GOM, to use Category B DAS to target healthy groundfish stocks. This SAP would be able to use hand-tended rod/reel gear to fish for haddock within the WGOM Closure Area during March and April. SAP participants could catch up to 50 mt of GOM haddock and up to 6.3 mt GOM cod, though vessels would not be able to retain any cod. Once these TAC's are caught, the SAP would be closed. The 50 mt TAC for haddock caught in this SAP would limit economic benefits to $140,000, based on the value of $1.27 per pound, the average price for the 2003 fishing year. Given that hook gear primarily catches cod and haddock, there is unlikely to be sufficient other catch to contribute to potential trip income. Limited information is available that would accurately assess whether vessels could selectively catch haddock without also catching substantial amounts of cod. Therefore, there is the potential that the 6.3–mt GOM cod bycatch TAC could limit the achievement of the full economic benefits from this SAP.

The CA II Yellowtail Flounder SAP was implemented under Amendment 13. The proposed action would revise the season, adjust the trip limit, limit the number of trips that could be taken, and establish a process that would allow the Regional Administrator to help achieve OY from the yellowtail flounder TAC and ensure that the SAP does not conflict with the management objectives outside of the SAP. In general, most of the proposed changes to the SAP would help mitigate the derby effects by spreading out landings over time and help ensure that the GB yellowtail flounder TAC is available throughout the fishing year. Limiting the number of trips that could be taken, in addition to lowering the trip limit to 10,000 lb (4,536 kg), could potentially avoid dramatic drops in ex-vessel price that result when large amounts of yellowtail flounder are landed at one time. Beginning the SAP in July instead of June would also contribute to higher landings prices, as prices for yellowtail flounder have historically been lower in June than other months. While regulating the supply of yellowtail flounder may offer vessels higher landings prices, these restrictions could also increase costs by increasing the number of trips necessary to harvest the available TAC. However, the proposed measures could help avoid the premature closing of the Eastern U.S./Canada Area due to the achievement of the GB yellowtail flounder TAC. This would enable vessels greater opportunity to fully harvest the available GB cod and GB haddock TAC allocated to the Eastern U.S./Canada Area and achieve the full economic benefit from the U.S./Canada Management Area for vessels operating under a Category A DAS.

This action proposes to re-categorize 10 Category C DAS as Category B (Reserve) DAS for vessels allocated zero Category A or B DAS under Amendment 13. These DAS could only be used in a SAP that does not include a DAS flipping provision (currently, only the WGOM Closure Area Rod/Reel SAP proposed in this action). The economic impact of this provision is expected to be positive for vessels receiving a minimum allocation. However, this provision could adversely affect other vessels that were allocated Category A or B DAS under Amendment 13 by increasing the number of potential participants in SAP's and spreading the limited potential benefits of these SAP's among more vessels.

FW 40B would also change the manner in which the GB Cod Hook Sector allocation is calculated by allowing all vessels and all landings, regardless of gear, to count towards the Sector's GB cod allocation. This could increase the Sector's share of the overall GB cod TAC. While Sector vessels would be able to increase overall fishing revenues from the increased allocation of GB cod, this provision would subsequently reduce the amount of GB cod TAC available to non-Sector vessels. Even though the TAC available to non-Sector vessels is a target TAC and would not result in area closures, the diminished non-Sector GB cod TAC could potentially result in a small increase in the probability that the GB cod target TAC would be exceeded.

The proposed action would provide an incentive for vessels to report and stand by an entangled whale by allowing vessels to receive a DAS credit for the time spent standing by an entangled whale. Increasing the

possibility that an entangled whale could be successfully tracked and disentangled would result in positive existence and non-consumptive use values to the public.

Under the proposed action, Category 1 herring vessels would be required to notify the NMFS Observer Program at least 72 hours prior to fishing for herring in the GOM or GB RMA's. In addition, if an observer is not provided for the trip, the vessel must notify NMFS Office of Law Enforcement via VMS prior to offloading the catch. These requirements are likely to impose some costs associated with reduced trip flexibility. However, it is now known the extent to which this provision would compromise economic efficiency of herring vessel operations.

Finally, this action would remove the net limit for Trip gillnet vessels. Removing the net limit would eliminate the need for gillnet tags for groundfish gillnets (a reduction in costs of $180 per vessel), reducing time required to switch tags over to different sized nets during vessel operations. This would provide greater flexibility in vessel operations, resulting in unknown positive economic benefits. This provision could increase the number of gillnets used by Trip gillnet vessels leading to potential increases in vessel revenue associated with higher landings.

*Economic Impacts of Alternatives to the Proposed Action*

The No Action alternative would provide no new opportunities for economic benefits above the current level. Under the No Action alternative, the economic impacts likely to result are those specified in the analysis for FW 40A as implemented on November 19, 2004. By selecting the No Action alternative, incentives to participate in the DAS Leasing or DAS Transfer Programs proposed under this action, such as the reduction in the conservation tax, removal of the tonnage criterion, and the opportunity to downgrade the DAS Leasing Program baseline, would not be available. This could continue to limit vessel participation in these programs and the associated potential economic benefits associated with increased fleet efficiency. Under the No Action alternative, vessels would not be able to participate in the WGOM Closure Area Rod/Reel Haddock SAP and would forego potential associated revenues. Selection of the No Action alternative would mean that the derby effects in the CA II Yellowtail Flounder SAP would continue and the GB yellowtail flounder TAC could be harvested before the end of the fishing year. This could result in decreased prices for yellowtail flounder and reduced economic opportunities for the U.S./Canada Management Area by limiting the potential for vessels to fully harvest the GB cod and GB haddock TAC's in the Eastern U.S./Canada Area. In addition, vessels allocated zero Category A or B DAS would not be allocated additional DAS and would therefore not be able to increase revenue through participation in the NE multispecies fishery. Vessels that have previously used gear other than hook gear would have fewer incentives to join the GB Cod Hook Sector and Sector vessels would continue to fish under the current lower GB cod TAC level under the No Action alternative. Finally, Trip gillnet vessels would continue to be restricted to net limitations and the gillnet tag requirements, resulting in increased operational costs and reduced efficiency.

FW 40B considered four other non-selected alternatives. These alternatives consisted of various combinations of all of the provisions described in FW 40B, including some that were not specified in the proposed alternative. The first non-selected alternative, Alternative 1, includes every provision described in FW 40B. Alternative 1 differs from the proposed alternative by including additional options for the DAS Leasing and Transfer Programs conservation tax, modifications to the non-groundfish permit transfer provisions of the DAS Transfer Program, the GB Haddock SAP North of CA I, an option that would allow only NE multispecies DAS vessels to participate in the WGOM Closure Area Rod/Reel Haddock SAP, options to recalculate the baseline DAS allocation implemented under Amendment 13, options to prohibit herring vessels from fishing in the NE multispecies closed areas, and a minimum observer requirement for vessels to participate in Category B DAS programs. Alternative 2 is identical to the proposed alternative without identifying specific options for several of the proposed measures. Alternative 3 differs from the proposed alternative in that it would not change the current conservation tax for the DAS Leasing and Transfer Programs, includes modifications to the non-groundfish permit transfer provisions of the DAS Transfer Program, and does not include modifications to the GB Cod Hook Sector allocation calculation. Alternative 4 differs from the proposed alternative in that it includes the GB Haddock SAP North of CA I, but does not include modifications to the GB Cod Hook Sector allocation calculation. For this analysis, the economic impacts of the provisions not included in the preferred alternative are considered and described below.

The non-selected options for revising the conservation tax for the DAS Leasing and Transfer Programs in FW 40B would have adopted either a 10 or a 20–percent conservation tax for both the DAS Leasing and Transfer Programs. This would represent reductions in the conservation tax for the DAS Transfer Program, but an increase in the conservation tax for the DAS Leasing Program. Reducing the conservation tax for the DAS Transfer Program would increase the value of DAS exchanged through this program. Conversely, increasing the conservation tax for the DAS Leasing Program would likely decrease the market value of DAS exchanged through this program. The conservation tax on leased DAS would likely result in greater adverse economic impact on small entities as compared to any economic gains resulting from greater incentives to participate in the DAS Transfer Program. Since the proposed alternative would reduce the conservation tax for the DAS Transfer Program, but not implement a conservation tax for the DAS Leasing Program, greater economic benefits are expected from the proposed measure than the non-selected measures for this provision.

Non-selected measures to modify non-groundfish permit transfers under the DAS Transfer Program include allowing vessels receiving DAS under this program to also accept other non-groundfish permits, allowing vessels to refuse other non-groundfish permits in lieu of a conservation tax on DAS exchanged, and allowing for the removal of a proxy vessel instead of requiring the transferring vessel to retire from all fisheries. These options would likely increase the potential value of DAS exchanged under the DAS Transfer Program. The economic impact of each of these non-selected measures is uncertain, but expected to be positive compared to the current DAS Transfer Program restrictions and, therefore, the proposed alternative. While the economic benefits of these non-selected measures would likely be greater than the proposed alternative, a lack of sufficient detail regarding the application of these measures and the implications of these measures on catch history and other FMP's prevented further consideration.

Another SAP to target GB cod in an area north of CA I was not selected for this proposed action. This SAP would allow all NE multispecies vessels equipped with a VMS to fish for up to 2,000 mt of haddock using a haddock

separator trawl. Information detailing the performance of the haddock separator trawl is not available. However, previous landings by vessels fishing in the area encompassed by the SAP with conventional trawl gear provides an estimate of the potential economic benefits from this provision. Using an average revenue of $5,700 per day and assuming that the 1,000 mt haddock TAC would be caught in 238 DAS, the potential revenue from this SAP is estimated at $1.4 million. Increasing the haddock TAC to 2,000 mt through the authority of the Regional Administrator would generate approximately $2.4 million in potential revenues. Current regulations allow vessels to fish in the area defined for this SAP. As a result, given the restrictive measures and monitoring requirements involved with this SAP, this measure would likely provide few additional opportunities for fishermen at the cost of considerable additional complexity in the fishery.

The non-selected option for the eligible participants in the WGOM Closure Area Rod/Reel Haddock SAP would have limited participation in this SAP to only limited access NE multispecies DAS vessels. This would exclude vessels issued a limited access Handgear A or a Small Vessel Exemption permit from participating in this SAP, resulting in unknown impacts on small entities.

Two options for changing the effective effort calculation (i.e., DAS baselines) implemented under Amendment 13 were considered for this action. One option would calculate effective effort based on the maximum number of DAS between 1996–2001 without being limited by the 2001 DAS allocation, but including carry-over DAS. The other option would calculate effective effort in the same manner, without considering carry-over DAS. These options would increase the total baseline allocation for the fishery. However, to remain consistent with the conservation objectives of Amendment 13, the split between Category A and B DAS would need to be adjusted. These options would reduce Category A DAS for at least 80 percent of all vessels with a non-zero effective effort baselines, resulting in an average loss of $5,200 per vessel. For the remaining vessels that would gain Category A DAS under these options, the average revenue gains would total $35,000 per vessel. As a result, the net economic benefits for these options total $2.8 million and $2.2 million, respectively. These benefits would have distributive effects as benefits would accrue to larger vessels and would shift between states. Given the distributive effects of these options and the fact that an overwhelming majority of small entities would be negatively affected by these options, neither option was selected for this action.

Three options were considered to prohibit herring vessels from fishing in groundfish closed areas. Option 1 would prohibit only herring mid-water trawl vessel access to the closed areas, Option 2 would prohibit herring mid-water and purse seine vessel access to the closed areas, and Option 3 would prohibit only herring purse seine vessel access to the closed areas. Aggregate economic impacts were only estimated for Option 2, as confidentiality concerns prevent reporting the economic impacts of Options 1 and 3. Option 2 would result in an average revenue loss of $52,000 per vessel affected. Although the economic impacts for Option 1 and 3 are not specified, these options would likely result in smaller adverse economic impacts to affected vessels. As a result, these options would have larger adverse economic impacts on small entities fishing for herring than the proposed alternative.

Finally, FW 40B considered a measure that would prevent a vessel that is not capable of carrying aboard an observer from participating in an approved SAP. This would likely result in greater costs to smaller vessels that do not have the required safety equipment necessary to carry an observer.

*Description of the Projected Reporting, Recordkeeping, and Other Compliance Requirements of the Proposed Rule*

Reporting and Recordkeeping Requirements

The proposed measures in FW 40B include the following provisions requiring either new or revised reporting and recordkeeping requirements: (1) GB cod research set-aside TAC request; (2) VMS purchase and installation; (3) VMS proof of installation; (4) automated VMS polling of vessel position; (5) declaration of intent to participate in the WGOM Closure Area Rod/Reel Haddock SAP and DAS to be used via VMS prior to each trip into this SAP; (6) LOA request to participate in the WGOM Closure Area Rod/Reel Haddock SAP; (7) notice requirements for observer deployment prior to every trip into the WGOM Closure Area Rod/Reel Haddock SAP; (8) notice requirements for observer deployment prior to every trip for Category 1 herring vessels intending to fish in the GOM or GB RMA's; (9) NMFS Office of Law Enforcement landings notice requirement for Category 1 herring vessels operating with an observer waiver; (10) Notification and communication with USCG and Center for Coastal Studies for standing by an entangled whale; (11) Request for DAS Credit for standing by an entangled whale; (12) daily VMS catch reports for vessels participating in the WGOM Closure Area Rod/Reel Haddock SAP; and (13) vessel baseline downgrade request for the DAS Leasing Program.

The measures proposed under FW 40B would result in several costs to participants. Researchers would be subject to postage costs of $2 per year for submitting requests for portions of the GB cod research set-aside TAC. To participate in the WGOM Closure Area Rod/Reel Haddock SAP, vessels would be required to use VMS. Costs not previously authorized under the Paperwork Reduction Act (PRA) involved with VMS operation include monthly operational costs associated with fees charged by the individual VMS vendor for satellite connection, as well as service and maintenance charges. The cost of the purchase and installation of VMS units to vessels participating in the NE multispecies fishery have already been considered and approved in a previous PRA submission. NMFS has currently certified two vendors to provide VMS services. A conservative cost estimate, based on operational charges for the Boatracs VMS vendor, is approximately $150 per month for each NE multispecies vendor. These monthly operational costs have previously been considered and approved in a previous PRA submission for most of the NE multispecies fishery. However, for this action, an additional 50 vessels are likely to use VMS that were not considered previously. Therefore, for this action, the yearly VMS operational costs, per vessel, for VMS usage under the proposed provisions in FW 40B are $1,800. Costs associated with VMS notifications to NMFS Office of Law Enforcement for Category 1 herring vessels not issued an observer waiver total approximately $3 per vessel, assuming a 50– percent observer coverage rate and a total of 1,337 trips per year. There would be no costs associated with communicating with the USCG or the Center for Coastal Studies regarding standing by an entangled whale. Written requests to receive a DAS credit for standing by an entangled whale would cost the public $3.70 for postage, assuming 10 such requests would be submitted per year. Daily catch reports submitted for the WGOM Closure Area Rod/Reel Haddock SAP

total approximately $116 per year for all vessels participating in this SAP. The costs associated with vessel baseline downgrade requests for the DAS Leasing Program total $518, assuming every vessel would downgrade their DAS Leasing Program baseline in one year.

Public Reporting Burden

This proposed rule contains collection-of-information requirements subject to review and approval by OMB under the PRA. This requirement has been submitted to OMB for approval. Public reporting burden for these collections of information are estimated as specified below.

1. GB cod research set-aside TAC request, OMBι 0648–0202 (30 min/response);
2. VMS purchase and installation, OMB# 0648–0202, (1 hr/response);
3. VMS proof of installation, OMB# 0648–0202, (5 min/response);
Automated VMS polling of vessel position, OMB# 0648–0202, (5 sec/response);
4. Declaration of intent to participate in the WGOM Closure Area Rod/Reel Haddock SAP and DAS to be used via VMS prior to each trip into this SAP, OMB# 0648–0202, (5 min/response);
5. LOA request to participate in the WGOM Closure Area Rod/Reel Haddock SAP, OMB# 0648–0202, (5 min/response);
6. Notice requirements for observer deployment prior to every trip into the WGOM Closure Area Rod/Reel Haddock SAP, OMB# 0648–0202, (2 min/response);
7. Notice requirements for observer deployment prior to every trip for Category 1 herring vessels intending to fish in the GOM or GB RMA's, OMB# 0648–0202, (2 min/response);
8. NMFS Office of Law Enforcement landings notice requirement for Category 1 herring vessels operating with an observer waiver, OMB# 0648–0202, (5 min/response);
9. Notification and Communication with USCG and Center for Coastal Studies, OMB# 0648–0202, (10 min/response);
10. Written requests to receive a DAS credit for standing by an entangled whale, OMB# 0648–0202, (30 min/response);
11. Daily electronic reporting of kept and discarded catch while participating in the WGOM Closure Area Rod/Reel Haddock SAP, OMB# 0648–0212, (15 min/response); and
12. Vessel baseline downgrade request for the DAS Leasing Program, OMB# 0648–0475, (1 hr/response).

These estimates include the time required for reviewing instructions, searching existing data sources, gathering and maintaining the data needed, and completing and reviewing the collection information.

Public comment is sought regarding: Whether this proposed collection of information is necessary for the proper performance of the functions of the agency, including whether the information shall have practical utility; the accuracy of the burden estimate; ways to enhance the quality, utility, and clarity of the information to be collected; and ways to minimize the burden of the collection of information, including through the use of automated collection techniques or other forms of information technology. Send comments on these or any other aspects of the collection of information to NMFS and to OMB (see **ADDRESSES**).

Notwithstanding any other provision of the law, no person is required to respond to, and no person shall be subject to penalty for failure to comply with, a collection of information subject to the requirements of the PRA, unless that collection of information displays a currently valid OMB control number.

**List of Subjects in 50 CFR Part 648**

Fisheries, Fishing, Reporting and recordkeeping requirements.

Dated: March 23, 2005.

**Rebecca Lent,**

*Deputy Assistant Administrator for Regulatory Programs, National Marine Fisheries Service.*

For the reasons stated in the preamble, 50 CFR part 648 is proposed to be amended as follows:

## PART 648—FISHERIES OF THE NORTHEASTERN UNITED STATES

1. The authority citation for part 648 continues to read as follows:

**Authority:** 16 U.S.C. 1801 *et seq.*

2. In § 648.9, paragraph (c)(1)(ii) is revised to read as follows:

### § 648.9 VMS requirements.

* * * * *

(c) * * *

(1) * * *

(ii) NMFS may initiate, at its discretion, the transmission of a signal indicating the vessel's accurate position, at least twice per hour, 24 hours a day, for all NE multispecies DAS vessels that elect to fish with a VMS specified in § 648.10(b) or that are required to fish with a VMS as specified in § 648.85(a), for each groundfish DAS trip that the vessel has elected to fish in the U.S./Canada Management Areas, and as specified in § 648.85(b) for each groundfish trip that the vessel has elected to fish in either the CA II Yellowtail Flounder SAP, the CA I Hook Gear Haddock SAP, the Regular B DAS Pilot Program, the Eastern U.S./Canada Haddock SAP Pilot Program, or the WGOM Closure Area Rod/Reel Haddock SAP.

* * * * *

3. In § 648.10, paragraphs (b)(1)(vi) through (viii) and (b)(3)(i)(D) are revised, and paragraphs (b)(1)(ix) and (b)(3)(i)(E) are added to read as follows:

### § 648.10 DAS notification requirements.

* * * * *

(b) * * *

(1) * * *

(vi) A vessel issued a limited access NE multispecies permit electing to fish under the U.S./Canada Resource Sharing Understanding, as specified in § 648.85(a);

(vii) A vessel electing to fish under the Regular B DAS Pilot Program, as specified in § 648.85(b)(6);

(viii) A vessel electing to fish in the Closed Area I Hook Gear Haddock SAP, as specified in § 648.85(b)(7); and

(ix) A vessel electing to fish in the WGOM Closure Area Rod/Reel Haddock SAP, as specified in § 648.85(b)(9).

* * * * *

(3) * * *

(i) * * *

(D) Fish in the CA I Hook Gear Haddock SAP specified in § 648.85(a)(7); or

(E) Fish in the WGOM Closure Area Rod/Reel Haddock SAP specified in § 648.85(b)(9).

* * * * *

4. In § 648.14, paragraphs (a)(136), (a)(139), and (c)(14) are revised; and paragraphs (a)(165) through (a)(176), (c)(80), (bb)(19), and (bb)(20) are added to read as follows:

### § 648.14 Prohibitions.

* * * * *

(a) * * *

(136) If fishing under the Closed Area II Yellowtail Flounder SAP, fish for, harvest, possess or land any regulated NE multispecies from the area specified in § 648.85(b)(3)(ii), unless in compliance with the restrictions and conditions specified in § 648.85(b)(3)(i) through (xi).

* * * * *

(139) If fishing in the Closed Area II Yellowtail Flounder SAP specified in § 648.85(b)(3), exceed the number of trips specified under § 648.85(b)(3)(vi) or (vii).

* * * * *

(165) Fish for, harvest, possess or land any regulated NE multispecies from the WGOM Closure Area specified in § 648.81(e)(1), unless in compliance

with the restrictions and conditions specified in § 648.85(b)(9)(v)(A) through (G), or unless fishing under the recreational or charter/party regulations specified in § 648.89.

(166) Enter or fish in the WGOM Closure Area Rod/Reel Haddock SAP outside of the season specified in § 648.85(b)(9)(iv) except when fishing under the recreational or charter/party regulations specified in § 648.89.

(167) If declared into the WGOM Closure Area Rod/Reel Haddock SAP in accordance with § 648.85(b)(9)(v)(D), fish for or set gear capable of catching NE multispecies outside of the WGOM Closure Area as described in § 648.81(e)(1) during the same trip.

(168) If the vessel has been issued a limited access NE multispecies DAS permit and is fishing in the WGOM Closure Area under the provisions of the WGOM Closure Area Rod/Reel Haddock SAP specified in § 648.85(b)(9), fail to comply with the minimum participation requirements in § 648.85(b)(9)(v)(A).

(169) If the vessel has been issued a limited access NE multispecies permit and is fishing in the WGOM Closure Area under the provisions of the WGOM Closure Area Rod/Reel Haddock SAP specified in § 648.85(b)(9), fail to comply with the VMS requirements in § 648.85(b)(9)(v)(B).

(170) If the vessel has been issued a limited access NE multispecies permit and is fishing in the WGOM Closure Area under the provisions of the WGOM Closure Area Rod/Reel Haddock SAP specified in § 648.85(b)(9), fail to comply with the observer notification requirements in § 648.85(b)(9)(v)(C).

(171) Enter or fish in the WGOM Closure Area under the provisions of the WGOM Closure Area Rod/Reel Haddock SAP as specified in § 648.85(b)(9), unless declared into the area in accordance with § 648.85(b)(9)(v)(D).

(172) If the vessel has been issued a limited access NE multispecies permit and is fishing in the WGOM Closure Area under the provisions of the WGOM Closure Area Rod/Reel Haddock SAP specified in § 648.85(b)(9), fail to comply with the gear requirements in § 648.85(b)(9)(v)(E).

(173) If the vessel has been issued a limited access NE multispecies permit and is fishing in the WGOM Closure Area under the provisions of the WGOM Closure Area Rod/Reel Haddock SAP specified in § 648.85(b)(9), fail to comply with the landing restrictions in § 648.85(b)(9)(v)(F).

(174) If the vessel has been issued a limited access NE multispecies permit and is fishing in the WGOM Closure Area under the provisions of the WGOM Closure Area Rod/Reel Haddock SAP specified in § 648.85(b)(9), fail to comply with the catch reporting requirements in § 648.85(b)(9)(v)(G).

(175) If the vessel has been issued a limited access NE multispecies permit, fish under the provisions of the WGOM Closure Area Rod/Reel Haddock SAP specified in § 648.85(b)(9) if the area is closed as described in § 648.85(b)(9)(v)(I).

(176) If a vessel is fishing under a Category B DAS in the Closed Area II Yellowtail Flounder SAP specified in § 648.85(b)(3), the Regular B DAS Pilot Program specified in § 648.85(b)(6), or the Eastern U.S./Canada Haddock SAP Pilot Program specified in § 648.85(b)(8), dump the contents of a net except on board the vessel.

* * * * *

(c) * * *

(14) If the vessel has been issued a limited access NE multispecies permit and fishes under a NE multispecies DAS with gillnet gear, fail to comply with gillnet tagging requirements specified in § 648.80(a)(3)(iv)(B)(4), (a)(3)(iv)(C), (a)(4)(iv)(B)(3), (b)(2)(iv)(B)(3), and (c)(2)(v)(B)(3), or fail to produce, or cause to be produced, gillnet tags when requested by an authorized officer.

* * * * *

(80) Provide false information on the application to downgrade the DAS Leasing Program baseline, as required under § 648.82(k)(4)(xi).

* * * * *

(bb) * * *

(19) If the vessel has been issued a Category 1 herring permit and is fishing for herring in the GOM/GB Exemption Area specified in § 648.80(a)(17), fail to notify NMFS at least 72 hours prior to departing on a trip for the purposes of observer deployment.

(20) If the vessel has been issued a Category 1 herring permit and is fishing for herring in the GOM/GB Exemption Area specified in § 648.80(a)(17), fail to notify the NMFS Office of Law Enforcement of the time and date of landing via VMS prior to crossing the VMS demarcation line on its return trip to port if issued an observer waiver pursuant to § 648.80(e)(6).

* * * * *

5. In § 648.80, paragraphs (a)(3)(iv)(A)(*2*), (a)(4)(iv)(A), (b)(2)(iv), (b)(2)(iv)(A), (c)(2)(v)(A), (d)(2), (d)(4), (d)(5), and (e)(2) through (e)(4) are revised; paragraphs (a)(3)(iv)(A)(*3*) and (*4*) are removed; and paragraphs (d)(6), (d)(7), (e)(5), and (e)(6) are added to read as follows:

**§ 648.80 NE Multispecies regulated mesh areas and restrictions on gear and methods of fishing.**

* * * * *

(a) * * *

(3) * * *

(iv) * * *

(A) * * *

(*2*) *Net size requirements.* Nets may not be longer than 300 ft (91.4 m), or 50 fathoms (91.4 m) in length.

* * * * *

(4) * * *

(iv) * * *

(A) *Trip gillnet vessels.* A Trip gillnet vessel fishing under a NE multispecies DAS and fishing in the GB Regulated Mesh Area may not fish with nets longer than 300 ft (91.4 m), or 50 fathoms (91.4 m) in length.

* * * * *

(b) * * *

(2) * * *

(iv) *Gillnet vessels.* For Day and Trip gillnet vessels, the minimum mesh size for any sink gillnet not stowed and not available for immediate use in accordance with § 648.23(b), when fishing under a DAS in the NE multispecies DAS program in the SNE Regulated Mesh Area, is 6.5 inches (16.5 cm) throughout the entire net. This restriction does not apply to nets or pieces of nets smaller than 3 ft (0.9 m) x 3 ft (0.9 m), (9 sq ft (0.81 sq m)), or to vessels that have not been issued a NE multispecies permit and that are fishing exclusively in state waters. Day gillnet vessels must also abide by the tagging requirements in paragraph (a)(3)(iv)(c) of this section.

(A) *Trip gillnet vessels.* A Trip gillnet vessel fishing under a NE multispecies DAS and fishing in the SNE Regulated Mesh Area may not fish with nets longer than 300 ft (91.4 m), or 50 fathoms (91.4 m) in length.

* * * * *

(c) * * *

(2) * * *

(v) * * *

(A) *Trip gillnet vessels.* A Trip gillnet vessel fishing under a NE multispecies DAS and fishing in the MA Regulated Mesh Area may not fish with nets longer than 300 ft (91.4 m), or 50 fathoms (91.4 m) in length.

* * * * *

(d) * * *

(2) When fishing under this exemption in the GOM/GB Exemption Area, as defined in paragraph (a)(17) of this section, and in the area described in § 648.81(c)(1), the vessel has on board a letter of authorization issued by the Regional Administrator, and complies with all restrictions and conditions thereof;

* * * * *

(4) The vessel does not fish for, possess, or land NE multispecies;

(5) The vessel must carry a NMFS-approved sea sampler/observer, if

requested by the Regional Administrator;

(6) Vessels issued a Category 1 herring permit pursuant to § 648.4(a)(10) and intending to fish for herring under this exemption in the GOM/GB GOM Exemption Area as defined in paragraph (a)(17) of this section must provide notice to NMFS of the vessel name; contact name for coordination of observer deployment; telephone number for contact; and the date, time, and port of departure, at least 72 hours prior to beginning any trip into these areas for the purposes of observer deployment; and

(7) Any vessel issued an observer waiver pursuant to paragraph (d)(6) of this section must notify NMFS Office of Law Enforcement through VMS of the time and place of offload prior to crossing the VMS demarcation line at the end of a trip.

* * * * *

(e) * * *

(2) When fishing under this exemption in the GOM/GB Exemption Area, as defined in paragraph (a)(17) of this section, the vessel has on board a letter of authorization issued by the Regional Administrator;

(3) The vessel only fishes for, possesses, or lands Atlantic herring, blueback herring, mackerel, or menhaden;

(4) The vessel does not fish for, possess, or land NE multispecies; and

(5) Vessels issued a Category 1 herring permit pursuant to § 648.4(a)(10) and intending to fish for herring under this exemption in the GOM/GB Exemption Area as defined in paragraph (a)(17) of this section must provide notice to NMFS of the vessel name; contact name for coordination of observer deployment; telephone number for contact; and the date, time, and port of departure, at least 72 hours prior to beginning any trip into these areas for the purposes of observer deployment; and

(6) Any vessel issued an observer waiver pursuant to paragraph (e)(5) of this section must notify NMFS Office of Law Enforcement through VMS of the time and place of offload prior to crossing the VMS demarcation line on its return trip to port.

* * * * *

6. In § 648.81, paragraph (e)(2) is revised to read as follows:

**§ 648.81 NE multispecies closed areas and measures to protect EFH.**

* * * * *

(e) * * *

(2) Unless otherwise restricted under paragraph (h) of this section, paragraph (e)(1) of this section does not apply to persons on fishing vessels or fishing vessels—

(i) That meet the criteria in paragraphs (f)(2)(ii) and (iii) of this section consistent with the requirements specified under § 648.80(a)(5); or

(ii) Fishing in the WGOM Closure Area Rod/Reel Haddock SAP as specified in § 648.85(b)(9).

* * * * *

7. In § 648.82, paragraphs (d)(2)(ii)(B) introductory text, (d)(3)(ii), (k)(4)(ix), (l)(1)(ii), and (l)(1)(iv) are revised, and paragraphs (d)(2)(ii)(B)(*4*), (k)(4)(xi), and (m) are added to read as follows:

**§ 648.82 Effort-control program for NE multispecies limited access vessels.**

* * * * *

(d)* * *

(2) * * *

(ii) * * *

(B) *Calculation.* Unless determined otherwise, as specified under paragraph (d)(2)(ii)(B)(*4*) or paragraph (d)(4) of this section, Reserve B DAS are calculated as follows:

* * * * *

(*4*) Notwithstanding the other provisions of this part, starting in fishing year 2005, any vessel allocated zero Category A or B (Regular and Reserve) DAS as specified under paragraph (d) of this section shall be allocated 10 Reserve B DAS. These DAS can only be used in approved SAP's specified at § 648.85(b) that do not contain a DAS flipping provision.

(3) * * *

(ii) *Calculation.* Category C DAS are defined as the difference between a vessel's used DAS baseline, as described in paragraph (c)(1) of this section, and the number of DAS allocated to the vessel as of May 1, 2001, unless otherwise modified according to paragraph (d)(2)(ii)(B)(*4*) of this section.

* * * * *

(k) * * *

(4) * * *

(ix) *Size restriction of Lessee vessel.* A Lessor only may lease DAS to a Lessee vessel with a baseline main engine horsepower rating that is no more than 20 percent greater than the baseline engine horsepower of the Lessor vessel. A Lessor vessel may only lease DAS to a Lessee vessel with a baseline length overall that is no more than 10 percent greater than the baseline length overall of the Lessor vessel. For the purposes of this program, the baseline horsepower and length overall specifications of vessels are those associated with the permit as of January 29, 2004, unless otherwise modified according to paragraph (k)(4)(xi) of this section.

* * * * *

(xi) *One-time downgrade of leasing baseline.* A vessel owner may elect to make a one-time downgrade to the vessel's DAS Leasing Program baseline length and horsepower as specified in paragraph (k)(4)(ix) of this section to match the length overall and horsepower specifications of the vessel that is currently issued the permit.

(A) *Application for a one-time DAS Leasing Program baseline downgrade.* To downgrade the DAS Leasing Program baseline, eligible NE multispecies vessels must submit a completed application form obtained from the Regional Administrator. An application to downgrade a vessel's DAS Leasing Program baseline must contain at least the following information: Vessel owner's name, vessel name, permit number, official number or state registration number, current vessel length overall and horsepower specifications, an indication whether additional information is included to document the vessel's current specifications, and the signature of the vessel owner.

(B) *Duration of one-time DAS Leasing Program baseline downgrade.* The downgraded DAS Leasing Program baseline remains in effect until the DAS Leasing Program expires or the permit is transferred to another vessel via a vessel replacement. Once the permit is transferred to another vessel, the DAS Leasing Program baseline reverts to the baseline horsepower and length overall specifications associated with the permit prior to the one-time downgrade. Once the DAS Leasing Program baseline is downgraded for a particular permit, no further downgrades may be authorized for that permit. The downgraded DAS Leasing Program baseline may only be used to determine eligibility for the DAS Leasing Program and does not affect or change the baseline associated with the DAS Transfer Program specified in paragraph (l)(1)(ii) of this section, or the vessel replacement or upgrade restrictions specified at § 648.4(a)(1)(i)(E) and (F), respectively.

* * * * *

(l) * * *

(1) * * *

(ii) NE multispecies DAS may be transferred only to a vessel with a baseline main engine horsepower rating that is no more than 20 percent greater than the baseline engine horsepower of the transferor vessel. NE multispecies DAS may be transferred only to a vessel with a baseline length overall that is no more than 10 percent greater than the baseline length overall of the transferor vessel. For the purposes of this program,

the baseline horsepower and length overall are those associated with the permit as of January 29, 2004.

* * * * *

(iv) NE multispecies Category A and Category B DAS, as defined under paragraphs (d)(1) and (2) of this section, shall be reduced by 20 percent upon transfer.

* * * * *

(m) *DAS credit for standing by entangled whales.* Limited access vessels fishing under the DAS program that report and stand by an entangled whale may request a DAS credit for the time spent standing by the whale. The following conditions and requirements must be met to receive this credit:

(1) At the time the vessel begins standing by the entangled whale, the vessel operator must notify the USCG and the Center for Coastal Studies or another organization as authorized by the Regional Administrator of the location of the entangled whale and that the vessel is going to stand by the entangled whale until the arrival of an authorized response team;

(2) Only one vessel at a time may receive credit for standing by an entangled whale. A vessel standing by an entangled whale may transfer its stand-by status to another vessel while waiting for an authorized response team to arrive, provided it notifies the USCG and the Center for Coastal Studies or another organization authorized by the Regional Administrator of the transfer. The vessel to which stand-by status is transferred must also notify the USCG and the Center for Coastal Studies or another organization authorized by the Regional Administrator of this transfer and comply with the conditions and restrictions of this part;

(3) The stand-by vessel must be available to answer questions on the condition of the animal, possible species identification, severity of entanglement, etc., and take photographs of the whale, if possible, regardless of the species of whale or whether the whale is alive or dead, during its stand-by status and after terminating its stand-by status. The stand-by vessel must remain on scene until the USCG or an authorized response team arrives, or the vessel is informed that an authorized response team will not arrive. If the vessel receives notice that a response team is not available, the vessel may discontinue standing-by the entangled whale and continue fishing operations; and

(4) To receive credit for standing by an entangled whale, a vessel must submit a written request to the Regional Administrator. This request must include at least the following information: Date and time when the vessel began its stand-by status, date of first communication with the USCG, and date and time when the vessel terminated its stand-by status. DAS credit shall not be granted for the time a vessel fishes when standing by an entangled whale. Upon a review of the request, NMFS shall consider granting the DAS credit based on information available at the time of the request, regardless of whether an authorized response team arrives on scene or a rescue is attempted. NMFS shall notify the permit holder of any DAS adjustment that is made or explain the reasons why an adjustment will not be made.

8. In § 648.85, paragraphs (b)(3)(iii), (b)(3)(vi) through (b)(3)(viii), (b)(5)(i), and (b)(5)(ii) are revised; and paragraphs (b)(5)(iii), (b)(5)(iv), and (b)(9) are added to read as follows:

**§ 648.85 Special management programs.**

* * * * *

(b) * * *

(3) * * *

(iii) *Season.* Eligible vessels may fish in the Closed Area II Yellowtail Flounder SAP during the period July 1 through December 31.

* * * * *

(vi) *Number of trips per vessel.* Unless otherwise authorized by the Regional Administrator as specified in paragraph (a)(3)(iv)(D) of this section, eligible vessels are restricted to one trip per month, during the season described in paragraph (b)(3)(iii) of this section.

(vii) *Maximum number of trips.* (A) Unless otherwise authorized by the Regional Administrator as specified in paragraph (a)(3)(iv)(D) of this section, the total number of trips by all vessels combined that may be declared into the Closed Area II Yellowtail Flounder SAP shall be as announced by the Regional Administrator, after consultation with the Council, for each fishing year, prior to June 1, through rulemaking consistent with the Administrative Procedure Act. The total number of trips by all vessels combined that may be declared into this SAP shall not exceed 320 trips per year. When determining the number of trips, the Regional Administrator shall consider the available yellowtail flounder TAC under the U.S./Canada Resource Sharing Understanding, the potential catch of GB yellowtail flounder by all vessels fishing outside of the SAP, recent discard estimates in all fisheries that catch yellowtail flounder, and the expected number of SAP participants.

(B) If the Regional Administrator determines that the available catch is insufficient to support 150 trips with a possession limit of 15,000 lb (6,804 kg) of yellowtail flounder per trip, the Regional Administrator may choose not to authorize any trips into the SAP during a fishing year.

(viii) *Trip limits*—(A) *Yellowtail flounder trip limit.* Unless otherwise authorized by the Regional Administrator as specified in paragraph (a)(3)(iv)(D) of this section, a vessel fishing in the CA II Yellowtail Flounder SAP may fish for, possess, and land up to 10,000 lb (4,536 kg) of yellowtail flounder per trip. The Regional Administrator may adjust this limit to a maximum of 30,000 lb (13,608 kg) per trip after considering the factors listed in paragraph (b)(3)(vii)(A) of this section for the maximum number of trips.

(B) *Cod and haddock trip limit.* Unless otherwise restricted, a NE multispecies vessel fishing any portion of a trip in the Closed Area II Yellowtail Flounder SAP may not fish for, possess, or land more than 1,000 lb (453.6 kg) of cod per trip, regardless of trip length. A NE multispecies vessel fishing in the Closed Area II Yellowtail Flounder SAP is subject to the haddock requirements described under § 648.86(a), unless further restricted under paragraph (a)(3)(iv) of this section.

* * * * *

(5) * * *

(i) *Stocks other than cod.* With the exception of GB cod and GOM cod, the incidental TAC's specified under this paragraph (b)(5) shall be allocated to the Regular B DAS Pilot Program described in paragraph (b)(6) of this section.

(ii) *GB cod.* The incidental TAC for GB cod specified in paragraph (b)(5) of this section shall be subdivided as follows: 59.4 percent to the Regular B DAS Pilot Program as described in paragraph (b)(6) of this section; 30.6 percent to the Eastern U.S./Canada Haddock SAP Pilot Program as described in paragraph (b)(8) of this section; and 10 percent to the GB cod research set-aside program specified in paragraph (b)(5)(iv) of this section. If no applications to use the GB cod research set-aside TAC have been received by May 1, the incidental TAC for GB cod shall be subdivided as follows: 66 percent to the Regular B DAS Pilot Program and 34 percent to the Eastern U.S./Canada Haddock SAP Pilot Program. If applications received by May 1, do not require the entire research set aside TAC of GB cod, the remaining set aside TAC of GB cod would be distributed to the Regular B DAS Pilot Program.

(iii) *GOM cod.* The incidental TAC for GOM cod specified in paragraph (b)(5) of this section shall be subdivided as follows: 95 percent to the Regular B DAS Pilot Program and 5 percent to the WGOM Closure Area Rod/Reel Haddock SAP described in paragraph (b)(9) of this section.

(iv) *Research set-aside TAC's.* Beginning in fishing year 2005, 10 percent of the incidental TAC for GB cod as specified in paragraph (b)(5)(ii) of this section shall be set aside to allow for the conduct of research experiments. Applications to use this research set-aside TAC must be sent to the Northeast Regional Office by May 1 of the year which the TAC is requested, except for applications for the 2005 fishing year. For the 2005 fishing year, applications must be received by August 1, 2005. If no applications to use this TAC have been received by the date specified in this paragraph, the GB cod research set-aside TAC shall be proportionally released to the Regular B DAS Pilot Program and the Eastern U.S./Canada Haddock SAP Pilot Program on May 1, as specified in paragraph (b)(5)(ii) of this section. If applications received by the date specified in this paragraph do not require the entire research set aside TAC of GB cod, the remaining set aside TAC of GB cod will be distributed to the Regular B DAS Pilot Program.

* * * * *

(9) *WGOM Closure Area Rod/Reel Haddock SAP*—(i) *Eligibility.* Vessels that have been issued a valid limited access NE multispecies permit are eligible to participate in the WGOM Closure Area Rod/Reel Haddock SAP and may fish in the WGOM Closure Area, as described in § 648.81(c), during the program duration and season specified in paragraphs (b)(9)(iii) and (b)(9)(iv) of this section, provided such vessels comply with the requirements of this section, and provided the SAP is not closed according to the provisions specified in paragraphs (b)(8)(v)(L) or (M) of this section.

(ii) *WGOM Closure Area Rod/Reel Haddock SAP Area.* The WGOM Closure Area Rod/Reel Haddock SAP Area is defined as the entire WGOM Closure Area as defined in § 648.82(c). Copies of a chart depicting this area are available from the Regional Administrator upon request. Vessels participating in this SAP may not fish outside of the SAP area, and no gear may be set outside the SAP area when participating in this SAP.

(iii) *Duration of program.* The WGOM Closure Area Rod/Reel Haddock SAP is in effect from [date of implementation of FW 40B] through [date 2 years from the date of implementation of FW 40B], unless extended by the Regional Administrator as specified in paragraph (b)(9)(iv)(J) of this section.

(iv) *Season.* Eligible vessels may fish in the WGOM Closure Area Rod/Reel Haddock SAP from March 1 through April 30.

(v) *Program restrictions.* Vessels fishing in the WGOM Closure Area Rod/Reel Haddock SAP must comply with the following conditions and restrictions:

(A) *Minimum participation requirement.* Limited access NE multispecies DAS vessels intending to participate in the WGOM Closure Area Rod/Reel Haddock SAP must elect to fish in this SAP for a minimum of 7 consecutive days. Vessels subject to this requirement must obtain and carry aboard a Letter of Authorization from the Regional Administrator documenting participation in this SAP. To obtain a Letter of Authorization, vessel owners must call the NE Region Permit Office and provide at least the following information: The vessel name, owner name, permit number, and the desired period of time that the vessel will be enrolled.

(B) *VMS requirement.* A NE multispecies vessel fishing in the WGOM Closure Area Rod/Reel Haddock SAP Area specified under paragraph (b)(9)(ii) of this section must have installed on board an operational VMS unit that meets the minimum performance criteria specified in §§ 648.9 and 648.10. A vessel participating in this SAP is responsible for the cost of one positional poll of the VMS unit per hour.

(C) *Observer notification.* For the purposes of selecting vessels for observer deployment, a vessel must provide notice to NMFS of the vessel name; contact name for coordination of observer deployment; telephone number for contact; and date, time, and port of departure at least 72 hr prior to the beginning of any trip which it declares into the WGOM Closure Area Rod/Reel Haddock SAP Area as specified under paragraph (b)(9)(v)(D) of this section, and in accordance with instructions provided by the Regional Administrator.

(D) *VMS declaration.* Prior to departure from port, a vessel intending to participate in the WGOM Closure Area Rod/Reel Haddock SAP must declare into the SAP via VMS. Any vessel subject to the DAS use requirements specified at § 648.82(b) and fishing in the WGOM Closure Area Rod/Reel Haddock SAP must declare that it intends to fish under a Category A or Category B DAS, in accordance with § 648.82(d)(2)(i)(A) before beginning the fishing trip.

(E) *Gear restrictions.* Any NE multispecies vessel participating in the WGOM Closure Area Rod/Reel Haddock SAP may only use hand-tended rod and reel gear. In addition, circle hooks must be used if using bait and no treble hooks can be used with jigs.

(F) *Landing limits.* Unless otherwise restricted, NE multispecies vessel fishing in the WGOM Closure Area Rod/Reel Haddock SAP may not fish for, possess, or land cod. A NE multispecies vessel fishing in the WGOM Closure Area Rod/Reel Haddock SAP must comply with the landing limits for haddock and other regulated species specified in § 648.86.

(G) *Reporting requirements.* The owner or operator of a vessel declared into the WGOM Closure Area Rod/Reel Haddock SAP, as described in paragraph (b)(9)(v)(D) of this section, must submit catch reports via VMS in accordance with instructions provided by the Regional Administrator for each day fished when declared into the WGOM Closure Area Rod/Reel Haddock SAP. The reports must be submitted in 24–hr intervals for each day, beginning at 0000 hr and ending at 2400 hr. The reports must be submitted by 0900 hr of the following day. These reports must include at least the following information: Total weight (lb/kg) of GOM haddock kept, and total weight (lb/kg) of GOM haddock and GOM cod discarded.

(H) *TAC allocation.* Beginning with the 2005 fishing year, the amount of GOM cod that may be caught from the WGOM Closure Area Rod/Reel Haddock SAP Area is the amount specified in paragraph (b)(5)(iii) of this section. The amount of GOM haddock that may be caught from this SAP may not exceed 50 mt (including catch kept and discarded).

(I) *Closure of the WGOM Closure Area Rod/Reel Haddock SAP.* When the Regional Administrator projects that either the GOM cod or GOM haddock TAC allocation specified in paragraph (b)(9)(v)(H) of this section has been caught or is projected to be caught by vessels participating in the WGOM Closure Area Rod/Reel Haddock SAP, NMFS shall close, through rulemaking consistent with the Administrative Procedure Act, the WGOM Closure Area Rod/Reel Haddock SAP to all limited access NE multispecies vessels intending to participate in this SAP as described in paragraph (d)(9) of this section. In addition, the Regional Administrator may close, through rulemaking consistent with the Administrative Procedure Act, the WGOM Closure Area Rod/Reel Haddock

SAP if the catch of cod to haddock caught in this SAP exceeds a ratio of 1:2, by weight.

(J) *Extension of the WGOM Closed Area Rod/Reel Haddock SAP.* The Regional Administrator shall extend, in accordance with the Administrative Procedure Act, the WGOM Closure Area Rod/Reel Haddock SAP beyond the date in paragraph (b)(9)(iii) of this section if all of the following conditions are met: Monitoring and enforcement provisions prove sufficient to reliably document the catch of cod and haddock, the catch of cod and haddock does not exceed the respective TAC's for these species in each of the 2 years that the SAP is authorized, and the ratio of cod to haddock catch is less than 1:2, by weight.

* * * * *

9. In § 648.87, paragraphs (d)(1)(ii) and (d)(1)(iii)(A) are revised to read as follows:

**§ 648.87 Sector allocation.**

* * * * *

(d) * * *

(1) * * *

(ii) *Eligibility.* All vessels with a valid limited access NE multispecies DAS permit are eligible to participate in the GB Cod Hook Sector, provided they have documented landings through valid dealer reports submitted to NMFS of GB cod during the fishing years 1996 to 2001, regardless of gear fished.

(iii) * * *

(A) Sum of the total accumulated landings of GB cod by vessels identified in the Sector's Operation Plan specified under paragraph (b)(2) of this section, for the fishing years 1996 through 2001, regardless of gear used, as reported in the NMFS dealer database.

* * * * *

[FR Doc. 05–6188 Filed 3–28–05; 8:45 am]

BILLING CODE 3510–22–S

# Notices

Federal Register

Vol. 70, No. 59

Tuesday, March 29, 2005

This section of the FEDERAL REGISTER contains documents other than rules or proposed rules that are applicable to the public. Notices of hearings and investigations, committee meetings, agency decisions and rulings, delegations of authority, filing of petitions and applications and agency statements of organization and functions are examples of documents appearing in this section.

## DEPARTMENT OF AGRICULTURE

### Agricultural Marketing Service

**[Docket Number FV–05–304]**

### United States Standards for Grades of Fresh Asparagus

**AGENCY:** Agricultural Marketing Service, USDA.

**ACTION:** Notice, request for public comment.

**SUMMARY:** The Agricultural Marketing Service (AMS), prior to undertaking research and other work associated with revising an official grade standard, is soliciting comments on a possible revision to the United States Standards for Grades of Fresh Asparagus. At a 2003 meeting of the Fruit and Vegetable Industry Advisory Committee, AMS was asked to review all the fresh fruit and vegetable grade standards for usefulness in serving the industry. As a result, AMS has noted that currently there are no provisions to allow purple or white asparagus to be graded using the standards. Therefore, AMS is soliciting comments on the possible revision of the color requirements in the grade standards. Additionally, AMS is seeking comments regarding any other revisions that may be necessary to better serve the industry.

**DATES:** Comments must be received by May 31, 2005.

**ADDRESSES:** Interested persons are invited to submit written comments to the Standardization Section, Fresh Products Branch, Fruit and Vegetable Programs, Agricultural Marketing Service, U.S. Department of Agriculture, 1400 Independence Ave., SW., Room 1661 South Building, Stop 0240, Washington, DC 20250–0240; Fax (202) 720–8871, e-mail *FPB.DocketClerk@usda.gov.* Comments should make reference to the dates and page number of this issue of the **Federal Register** and will be made available for public inspection in the above office during regular business hours. The United States Standards for Grades of Fresh Asparagus is available either at the above address or by accessing the Fresh Products Branch Web site at: *http://www.ams.usda.gov/standards/stanfrfv.htm.*

**FOR FURTHER INFORMATION CONTACT:** David L. Priester, at the above address or call (202) 720–2185; e-mail *David.Priester@usda.gov.*

**SUPPLEMENTARY INFORMATION:** Section 203(c) of the Agricultural Marketing Act of 1946 (7 U.S.C. 1621–1627), as amended, directs and authorizes the Secretary of Agriculture ''to develop and improve standards of quality, condition, quality, grade and packaging and recommend and demonstrate such standards in order to encourage uniformity and consistency in commercial practices * * *.'' AMS is committed to carrying out this authority in a manner that facilitates the marketing of agricultural commodities and makes copies of official standards available upon request. The United States Standards for Grades of Fruit and Vegetables not connected with Federal Marketing Orders or U.S. Import Requirements, no longer appear in the Code of Federal Regulations, but are maintained by the USDA/AMS/Fruit and Vegetable Programs.

AMS is proposing to revise the U.S. Standards for Grades of Fresh Asparagus using the procedures that appear in Part 36, Title 7 of the Code of Federal Regulations (7 CFR part 36). These standards were last revised in 1966.

#### Background

At a meeting of the Fruit and Vegetable Industry Committee, AMS was asked to review all the fresh fruit and vegetable grade standards for usefulness in serving the industry. As a result, AMS has identified the U.S. Standards for Grades of Fresh Asparagus green color requirement for possible updating. Currently the standards require two-thirds of the asparagus stalk to be green color. AMS is proposing to revise the requirement to allow for purple and white asparagus to be graded using the standards. AMS believes that a revision to include purple and white asparagus in the color requirement section is warranted to better serve the industry. However, prior to undertaking detailed work to develop a proposed revision to the standard, AMS is soliciting comments on the possible revision to the standard and the probable impact on distributors, processors, and growers. Additionally, AMS is seeking comments regarding any other revisions that may be necessary to better serve the industry.

This notice provides for a 60-day comment period for interested parties to comment on changes to the standard. Should AMS conclude that there is a need for the revision of the standard, the proposed revision of the standard will be published in the **Federal Register** with a request for comments in accordance with 7 CFR part 36.

**Authority:** 7 U.S.C. 1621–1627.

Dated: March 23, 2005.

**Kenneth C. Clayton,**

*Acting Administrator, Agricultural Marketing Service.*

[FR Doc. 05–6083 Filed 3–28–05; 8:45 am]

**BILLING CODE 3410–02–P**

## DEPARTMENT OF AGRICULTURE

### Agricultural Research Service

### United States National Arboretum (USNA); Notice of Intent To Renew Expired Information Collection

**AGENCY:** Agricultural Research Service; Research, Education, and Economics; USDA.

**ACTION:** Notice and request for comment.

**SUMMARY:** The Department of Agriculture (USDA) seeks comments on the intent of the USNA to renew an information collection that expires on May 31, 2005. The information collection serves as a means to collect fees to be charged for certain uses of the facilities, grounds, and services. This includes fees for use of the grounds and facilities, as well as for commercial photography and cinematography. Fees generated will be used to defray USNA expenses or to promote the missions of the USNA.

**DATES:** Comments must be submitted on or before June 2, 2005.

**ADDRESSES:** You may submit comments, identified by (docket number and/or RIN Number _____), by any of the following methods:

Federal eRulemaking Portal: *http://www.regulations.gov.* Follow the instructions for submitting comments.

E-mail: *eliast@ars.usda.gov*. Include (docket number and/or RIN number ____) in the subject line of text. Fax: (202) 245–4514

Mail: Director, U.S. National Arboretum, Beltsville Area, Agricultural Research Service, 3501 New York Avenue, NE., Washington, DC 20002.

Hand Delivery/Courier: Director, U.S. National Arboretum, Beltsville Area, Agricultural Research Service, 3501 New York Avenue, NE., Washington, DC 20002.

**SUPPLEMENTARY INFORMATION:**

*Title:* Intent to Renew an Expired Information Collection.

*OMB Number:* 0518–0024, expiration date of approval, May 31, 2005.

*Type of Request:* To extend an approved information collection.

*Abstract:* The mission of the U.S. National Arboretum (USNA) is to serve the public need for scientific research, education, and gardens that conserve and showcase plants to enhance the environment. The USNA is a 446-acre public facility, open to the general public for purposes of education and passive recreation. Horticulture and gardening are important aspects of American life. The USNA receives approximately 500,000 visitors on the grounds each year. Garden clubs and societies like to use the USNA grounds to showcase their activities. The USNA has many spectacular features and garden displays which are very popular with the visitors. In order to administer the use of the USNA facilities and to determine if the requested use is consistent with the mission of the USNA, it is necessary for the USNA to obtain information from the requestor. The requestor is asked to indicate by whom and for what purpose the USNA facilities are to be used. This information is collected by officials using applications in the form of questionnaires. Applications are in hard copy format and available on the USNA Web site (*www/usna.usda.gov*). Completed permit requests are received in person, by mail, and by facsimile. Work is underway to accept permits electronically.

**Paperwork Reduction Act**

In accordance with the Office of Management and Budget (OMB) regulations (5 CFR part 1320) which implements the Paperwork Reduction Act of 1995 (44 U.S.C. Chapter 35), the information collection and record keeping requirements that will be imposed will be submitted to OMB for approval. These requirements will not become effective prior to OMB approval.

**Background**

Section 890 (b) of the Federal Agriculture Improvement and Reform Act of 1996, Public Law 104–127 (1996 Act), expanded the authorities of the Secretary of Agriculture to charge reasonable fees for the use of USNA facilities and grounds. These authorities included the ability to charge fees for temporary use by individuals or groups of USNA facilities and grounds in furtherance of the mission of the USNA. Also, authority was provided to charge fees for tram tours and for the use of the USNA for commercial photography and cinematography. All rules and regulations noted in 7 CFR 500, subpart A, conduct on the USNA property, will apply to individuals or groups granted approval to use facilities and grounds.

*Estimate of burden:* The USNA estimates 200 requests for the use of the facilities and 100 for photography and cinematography on an annual basis. Each request will require the completion of an application. The application is simple and requires only information readily available to the requestor. A copy of the application may be obtained from the USNA or on the USNA Web site.

*Estimate Total Annual Burden on Respondents:* The estimated completion time for the application requires less than 15 minutes. The total cost for responding is $1,755 for 65 hours of time at $27 per hour. In addition to the current process of obtaining the permit request in person, by mail, and by facsimile, (and receiving them back in a like manner), the application for photography and cinematography is available on the USNA Web site (*http://www.usda.usda.gov/information/photography.html*). The application for the use of facilities will be available on the website by the end of the calendar year. Completed permit requests can then be submitted to the Administrative Group, USDA, ARS, U.S. National Arboretum, 3501 New York Avenue, NE., Washington, DC 20002.

**Comments**

Comments are invited on whether the proposed collection is necessary for the proper functioning of the facility, including whether the information will have practical ability; whether the estimate of the burden of the proposed collection is accurate; how to enhance the quality, utility and clarity of the information to be collected; and whether the burden of collection could be minimized.

Done at Washington, DC, this 21st day of March 2005.

**Edward B. Knipling,**

*Administrator, Agricultural Research Service.*

[FR Doc. 05–6133 Filed 3–24–05; 12:44 pm]

**BILLING CODE 3410–03–P**

---

## DEPARTMENT OF AGRICULTURE

### Federal Crop Insurance Corporation

### Grants and Cooperative Agreements; Availability, etc: Commodity Partnerships for Risk Management Education Program

*Funding Opportunity Title:* Commodity Partnerships for Risk Management Education (Commodity Partnerships program).

*Announcement Type:* Notice of Funding Availability for Competitive Partnership Agreements—Initial.

*CFDA Number:* 10.457.

*Dates:* Applications are due 5 p.m. EDT, May 31, 2005.

*Executive Summary:* The Federal Crop Insurance Corporation (FCIC), operating through the Risk Management Agency (RMA), announces the availability of approximately $4.0 million for Commodity Partnerships for Risk Management Education (the Commodity Partnerships program). The purpose of this partnership agreement program is to deliver training and information in the management of production, marketing, and financial risk to U.S. agricultural producers. The program gives priority to educating producers of crops currently not insured under Federal crop insurance, specialty crops, and underserved commodities, including livestock and forage. A maximum of 40 partnership agreements will be funded, with no more than four in each of the ten designated RMA Regions. The maximum award for any partnership agreement will be $150,000. Recipients of awards must demonstrate non-financial benefits from a partnership agreement and must agree to the substantial involvement of RMA in the project. Funding availability for this program may be announced at approximately the same time as funding availability for similar but separate programs—CFDA No. 10.455 (Community Outreach and Assistance Partnerships), CFDA No. 10.456 (Risk Management Research Partnerships), CFDA No. 10.458 (Crop Insurance Education in Targeted States) and CFDA No. 10.459 (Commodity Partnerships for Small Agricultural Risk Management Education Sessions). Prospective applicants should carefully examine and compare the notices for each program.

**Full Text of Announcement**

*I. Funding Opportunity Description*

Legislative Authority

The Commodity Partnerships program is authorized under section 522(d)(3)(F) of the Federal Crop Insurance Act (Act) (7 U.S.C. 1522(d)(3)(F).

Background

RMA promotes and regulates sound risk management solutions to improve the economic stability of American agriculture. On behalf of FCIC, RMA does this by offering Federal crop insurance products through a network of private-sector partners, overseeing the creation of new risk management products, seeking enhancements in existing products, ensuring the integrity of crop insurance programs, offering outreach programs aimed at equal access and participation of underserved communities, and providing risk management education and information. One of RMA's strategic goals is to ensure that its customers are well informed as to the risk management solutions available. This educational goal is supported by section 522(d)(3)(F) of the Act, which authorizes FCIC funding for risk management training and informational efforts for agricultural producers through the formation of partnerships with public and private organizations. With respect to such partnerships, priority is to be given to reaching producers of Priority Commodities, as defined below.

Definition of Priority Commodities

For purposes of this program, Priority Commodities are defined as:

- *Agricultural commodities covered by (7 U.S.C. 7333).* Commodities in this group are commercial crops that are not covered by catastrophic risk protection crop insurance, are used for food or fiber (except livestock), and specifically include, but are not limited to, floricultural, ornamental nursery, Christmas trees, turf grass sod, aquaculture (including ornamental fish), and industrial crops.
- *Specialty crops.* Commodities in this group may or may not be covered under a Federal crop insurance plan and include, but are not limited to, fruits, vegetables, tree nuts, syrups, honey, roots, herbs, and highly specialized varieties of traditional crops.
- *Underserved commodities.* This group includes: (a) Commodities, including livestock and forage, that are covered by a Federal crop insurance plan but for which participation in an area is below the national average; and (b) commodities, including livestock and forage, with inadequate crop insurance coverage.

A project is considered as giving priority to Priority Commodities if the majority of the educational activities of the project are directed to producers of any of the three classes of commodities listed above or any combination of the three classes.

Project Goal

The goal of this program is to ensure that ''* * * producers will be better able to use financial management, crop insurance, marketing contracts, and other existing and emerging risk management tools.''

Purpose

The purpose of the Commodity Partnership program is to provide U.S. farmers and ranchers with training and informational opportunities to be able to understand:

- The kinds of risks addressed by existing and emerging risk management tools;
- The features and appropriate use of existing and emerging risk management tools; and
- How to make sound risk management decisions.

For 2005, the FCIC Board of Directors and the FCIC Manager are seeking projects with priorities that include risk management training in one of the following areas:

- Multi-Year Losses—Drought Mitigation
- Livestock Risk Management
- Soybean Rust (Disease)
- Quality of Crop Losses—(such as Kansas wheat sprout, peas, lentils)
- AGR and AGR-Lite crop insurance
- Forage, Pasture, Rangeland

*II. Award Information*

*Type of Award:* Partnership Agreements, which require the substantial involvement of RMA.

*Funding Availability:* Approximately $4,000,000 is available in fiscal year 2005 to fund up to 40 partnership agreements. The maximum award for any agreement will be $150,000. It is anticipated that a maximum of four agreements will be funded for each designated RMA Region.

Applicants should apply for funding under that RMA Region where the educational activities will be directed.

In the event that all funds available for this program are not obligated after the maximum number of agreements are awarded or if additional funds become available, these funds may, at the discretion of the Manager of FCIC, be used to award additional applications that score highly by the technical review panel or allocated pro-rata to award recipients for use in broadening the size or scope of awarded projects if agreed to by the recipient. In the event that the Manager of FCIC determines that available RMA resources cannot support the administrative and substantial involvement requirements of all agreements recommended for funding, the Manager may elect to fund fewer agreements than the available funding might otherwise allow. It is expected that the awards will be made approximately 60 days after the application deadline. All awards will be made and agreements finalized no later than September 30, 2005.

*Location and Target Audiences:* RMA Regional Offices and the States serviced within each Region are listed below. Staff from the respective RMA Regional Offices will provide substantial involvement for projects conducted within their Region.

Billings, MT Regional Office: (MT, WY, ND, and SD)
Davis, CA Regional Office: (CA, NV, UT, AZ, and HI)
Jackson, MS Regional Office: (KY, TN, AR, LA, and MS)
Oklahoma City, OK Regional Office: (OK, TX, and NM)
Raleigh, NC Regional Office: (ME, NH, VT, MA, RI, CT, NY, NJ, PA, MD, DE, WV, VA, and NC)
Spokane, WA Regional Office: (WA, ID, OR, and AK)
Springfield, IL Regional Office: (IL, IN, OH, and MI)
St. Paul, MN Regional Office: (MN, WI, and IA)
Topeka, KS Regional Office: (KS, MO, NE, and CO)
Valdosta, GA Regional Office: (AL, GA, SC, FL, and Puerto Rico)

Applicants must designate in their application narratives the RMA Region where educational activities will be conducted and the specific groups of producers within the region that the applicant intends to reach through the project. Priority will be given to producers of Priority Commodities. Applicants proposing to conduct educational activities in more than one RMA Region must submit a separate application for each RMA Region. This requirement is not intended to preclude producers from areas that border a designated RMA Region from participating in that region's educational activities. It is also not intended to prevent applicants from proposing the use of certain informational methods, such as print or broadcast news outlets, that may reach producers in other RMA Regions.

*Maximum Award:* Any application that requests Federal funding of more

than $150,000 for a project will be rejected.

*Project Period:* Projects will be funded for a period of up to one year from the project starting date.

*Description of Agreement Award:*

Recipient Tasks

In conducting activities to achieve the purpose and goal of this program in a designated RMA Region, the award recipient will be responsible for performing the following tasks:

• Finalize and provide specific details for the Statement of Work (Form RME–2). The Statement of Work must describe the specific manner in which various subtasks for the project will be completed, the dates by which each task and subtask will be completed, the specific location for all promotional and educational activities, and the partners that will have responsibility for each task and subtask. Task milestones must be listed in a way that ensures that progress can be measured at various stages throughout the life of the project. The Statement of Work must also provide for the substantial involvement of RMA in the project. All partnership agreements resulting from this announcement will include Statements of Work based on Form RME–2. All applicants must use this format for proposing Statements of Work.

• Assemble speaker/presentation materials appropriate for risk management education and information within the designated RMA Region. This will include: (a) Gathering existing instructional materials that meet the local needs of agricultural producers; (b) identifying gaps in existing instructional materials; and (c) developing new materials or modifying existing instructional materials to fill existing gaps.

• Develop and conduct a promotional program. This program will include activities using media, newsletters, publications, or other appropriate informational dissemination techniques that are designed to: (a) Raise awareness for risk management; (b) inform producers of the availability of risk management tools; and (c) inform producers and agribusiness leaders in the designated RMA Region of training and informational opportunities.

• Deliver risk management training and informational opportunities to agricultural producers and agribusiness professionals in the designated RMA Region. This will include organizing and delivering educational activities using the instructional materials identified earlier. Activities should be directed primarily to agricultural producers, but may include those agribusiness professionals that have frequent opportunities to advise producers on risk management tools and decisions.

• Document all educational activities conducted under the partnership agreement and the results of such activities, including criteria and indicators used to evaluate the success of the program. The recipient will also be required to provide information to an RMA-selected contractor to evaluate all educational activities and advise RMA as to the effectiveness of activities.

RMA Activities

FCIC, working through RMA, will be substantially involved during the performance of the funded project through RMA's ten Regional Offices. Potential types of substantial involvement may include, but are not limited to the following activities.

• Assist in the selection of subcontractors and project staff.

• Collaborate with the recipient in assembling, reviewing, and approving risk management materials for producers in the designated RMA Region.

• Collaborate with the recipient in reviewing and approving a promotional program for raising awareness for risk management and for informing producers of training and informational opportunities in the RMA Region.

• Collaborate with the recipient on the delivery of education to producers and agribusiness leaders in the RMA Region. This will include: (a) Reviewing and approving in advance all producer and agribusiness leader educational activities; (b) advising the project leader on technical issues related to crop insurance education and information; and (c) assisting the project leader in informing crop insurance professionals about educational activity plans and scheduled meetings.

Applications that do not contain substantial involvement by RMA will be rejected.

Other Tasks

In addition to the specific, required tasks listed above, the applicant may propose additional tasks that would contribute directly to the purpose of this program. For any proposed additional task, the applicant must identify the objective of the task, the specific subtasks required to meet the objective, specific time lines for performing the subtasks, and the specific responsibilities of partners. The applicant must also identify specific ways in which RMA would have substantial involvement in the proposed project task.

## III. Eligibility Information

### *1. Eligible Applicants*

Eligible applicants include State departments of agriculture, universities, non-profit agricultural organizations, and other public or private organizations with the capacity to lead a local program of risk management education for farmers and ranchers in an RMA Region. Individuals are not eligible applicants. Although an applicant may be eligible to compete for an award based on its status as an eligible entity, other factors may exclude an applicant from receiving Federal assistance under this program governed by Federal law and regulations (*e.g.* debarment and suspension; a determination of non-performance on a prior contract, cooperative agreement, grant or partnership; a determination of a violation of applicable ethical standards). Applications from ineligible or excluded persons will be rejected in their entirety.

### *2. Cost Sharing or Matching*

This program has neither a cost sharing nor a matching requirement.

### *3. Other—Non-Financial Benefits*

To be eligible, applicants must also be able to demonstrate that they will receive a non-financial benefit as a result of a partnership agreement. Non-financial benefits must accrue to the applicant and must include more than the ability to provide employment income to the applicant or for the applicant's employees or the community. The applicant must demonstrate that performance under the partnership agreement will further the specific mission of the applicant (such as providing research or activities necessary for graduate or other students to complete their educational program). Applicants that do not demonstrate a non-financial benefit will be rejected.

## IV. Application and Submission Information

### *1. Address To Request Application Package*

Program application materials for the Commodity Partnerships program under this announcement may be downloaded from the RMA Web site at: *http://www.rma.usda.gov*. Applicants may also request application materials from: Michelle Fuller, USDA–RMA–RME, 1400 Independence Ave., SW., Stop 0808, (Portals Bldg., Suite 508), Washington, DC 20250–0808, phone: (202) 720–6356, fax: (202) 690–3605, e-mail: *RMA.Risk-Ed@rma.usda.gov*.

*2. Content and Form of Application Submission*

A complete and valid application package must include an electronic copy (Microsoft Word format preferred) of the narrative portion (Forms RME 1 and RME 2) of the application package on diskette or compact disc and an original and two copies of the completed and signed application must be submitted in one package at the time of initial submission. RMA would appreciate receiving nine additional copies to facilitate the panel review process (twelve applications in all), which must include the following:

1. A completed and signed OMB Standard Form 424, ''Application for Federal Assistance.''
2. A completed and signed OMB Standard Form 424–A, ''Budget Information—Non-construction Programs.'' Indirect costs allowed for projects submitted under this announcement will be limited to ten (10) percent of the total direct cost of the partnership agreement. Federal funding requested (the total of direct and indirect costs) must not exceed $150,000. Applicants may be asked to provide a copy of their indirect cost rate negotiated with their cognizant agency.
3. A completed and signed OMB Standard Form 424–B, ''Assurances, Non-constructive Programs.''
4. Risk Management Education Project Narrative (Form RME–1). Complete all required parts of Form RME–1:

Part I—Title Page

Part II—A written narrative of no more than 10 single-sided pages which will provide reviewers with sufficient information to effectively evaluate the merits of the application according to the evaluation criteria listed in this notice. Although a Statement of Work, which is the second evaluation criterion, is to be completed in detail in RME Form-2, applicants may wish to highlight certain unique features of the Statement of Work in Part II for the benefit of the evaluation panel. If your narrative exceeds the page limit, only the first 10 pages will be reviewed.

- 12 point, unreduced font size.
- 8.5 by 11 inch paper.
- One-inch margins on each page.
- Printed on only one side of paper.
- Held together only by rubber bands or metal clips; not bound in any other way

Part III—A Budget Narrative, describing how the categorical costs listed on SF 424–A are derived.

Part IV—Provide a ''Statement of Non-financial Benefits.'' (Refer to Section III, Eligibility Information, above).

5. ''Statement of Work,'' Form RME–2, which identifies tasks and subtasks in detail, expected completion dates and deliverables, and RMA's substantial involvement role for the proposed project.
6. (Optional) An optional appendix containing project participant resumes, letters of partnership support, or other materials that the applicant believes will directly support the information provided in the narrative. Applicants should not seek letters of partnership support from RMA Regional Offices because these offices will automatically provide substantial involvement in all projects that are awarded funding.
7. A completed and signed OMB Standard Form LLL, ''Disclosure of Lobbying Activities.''
8. A completed and signed AD–1047, ''Certification Regarding Debarment, Suspension and Other Responsibility Matters ''Primary Covered Transactions.''
9. A completed and signed AD–1049, ''Certification Regarding Drug-Free Workplace.''

*3. Submission Dates and Times*

*Applications Deadline:* 5 p.m. EDT, May 31, 2005. Applicants are responsible for ensuring that RMA receives a complete application package by the closing date and time. Incomplete or late application packages will not receive further consideration.

*4. Intergovernmental Review*

Not applicable.

*5. Funding Restrictions*

Partnership agreement funds may not be used to:

a. Plan, repair, rehabilitate, acquire, or construct a building or facility including a processing facility;

b. Purchase, rent, or install fixed equipment;

c. Repair or maintain privately owned vehicles;

d. Pay for the preparation of the partnership agreement application;

e. Fund political activities;

f. Alcohol, food, beverage, or entertainment;

g. Pay costs incurred prior to receiving a partnership agreement;

h. Fund any activities prohibited in 7 CFR Parts 3015 and 3019, as applicable.

*6. Other Submission Requirements*

*Mailed submissions:* Applications submitted through express, overnight mail or another delivery service will be considered as meeting the announced deadline if they are received in the mailroom at the address stated below for express, overnight mail or another delivery service on or before the deadline. Applicants are cautioned that express, overnight mail or other delivery services do not always deliver as agreed. Applicants should take this into account because failure of such delivery services will not extend the deadline. Mailed applications will be considered as meeting the announced deadline if they are received on or before the deadline in the mailroom at the address stated below for mailed applications. Applicants are responsible for mailing applications well in advance, to ensure that applications are received on or before the deadline time and date. Applicants using the U.S. Postal Services should allow for the extra time for delivery due to the additional security measures that mail delivered to government offices in the Washington DC area requires.

Address when using private delivery services or when hand delivering: Attention: Risk Management Education Program, USDA/RMA, 1250 Maryland Avenue, SW., Suite 508, Washington, DC 20024.

Address when using U.S. Postal Services: Attention: Risk Management Education Program, USDA/RMA, Stop 0808, 1400 Independence Ave, SW., Washington, DC 20250–0808.

*Electronic submissions:* Although the application package may be downloaded electronically, RMA cannot accommodate transmissions of application submissions by facsimile or through other electronic media. Therefore, applications transmitted electronically will not be accepted regardless of the date or time of submission or the time of receipt.

Acknowledgement of Applications

Receipt of applications will be acknowledged by e-mail, whenever possible. Therefore, applicants are encouraged to provide e-mail addresses in their applications. If an e-mail address is not indicated on an application, receipt will be acknowledged by letter. There will be no notification of incomplete, unqualified or unfunded applications until the awards have been made. When received by RMA, applications will be assigned an identification number. This number will be communicated to applicants in the acknowledgement of receipt of applications. An application's identification number should be referenced in all correspondence regarding the application. If the applicant does not receive an acknowledgement within 15 days of the submission deadline, the applicant

should notify RMA's point of contact indicated in Section VII, Agency Contact.

## V. Application Review Information

*1. Criteria*

Applications submitted under the Commodity Partnerships program will be evaluated within each RMA Region according to the following criteria:

Priority—Maximum 10 Points

The applicant can submit projects that are not related to Priority Commodities. However, priority is given to projects relating to Priority Commodities and the degree in which such projects relate to the Priority Commodities. Projects that relate solely to Priority Commodities will be eligible for the most points.

Project Benefits—Maximum 25 Points

The applicant must demonstrate that the project benefits to farmers and ranchers warrant the funding requested. Applicants will be scored according to the extent they can: (a) Reasonably estimate the number of producers reached through the various educational activities described in the Statement of Work; (b) justify such estimates with clear specifics; (c) identify the actions producers will likely be able to take as a result of the activities described in the Statement of Work; and (d) identify the specific measures for evaluating results that will be employed in the project. Reviewers' scoring will be based on the scope and reasonableness of the applicant's estimates of producers reached through the project, clear descriptions of specific expected project benefits, and well-designed methods for measuring the project's results and effectiveness.

Statement of Work—Maximum 35 Points

The applicant must produce a clear and specific Statement of Work for the project. For each of the tasks contained in the Description of Agreement Award (refer to Section II Award Information), the applicant must identify and describe specific subtasks, responsible entities, expected completion dates, RMA substantial involvement, and deliverables that will further the purpose of this program. Applicants will obtain a higher score to the extent that the Statement of Work is specific, measurable, reasonable, has specific deadlines for the completion of subtasks, relates directly to the required activities and the program purpose described in this announcement, and is sensitive to the needs of producers that are small, have limited resources, are minorities, or are beginning in a farming or ranching business. Applicants are required to submit this Statement of Work on Form RME–2.

Partnering—Maximum 15 Points

The applicant must demonstrate experience and capacity to partner with and gain the support of grower organizations, agribusiness professionals, and agricultural leaders to carry out a local program of education and information in a designated RMA Region. Applicants will receive higher scores to the extent that they can document and demonstrate: (a) That partnership commitments are in place for the express purpose of delivering the program in this announcement; (b) that a broad group of farmers and ranchers will be reached within the RMA Region; and (c) that a substantial effort has been made to partner with organizations that can meet the needs of producers that are small, have limited resources, are minorities, or are beginning farmers and ranchers.

Project Management—Maximum 15 Points

The applicant must demonstrate an ability to implement sound and effective project management practices. Higher scores will be awarded to applicants that can demonstrate organizational skills, leadership, and experience in delivering services or programs that assist agricultural producers in the respective RMA Region. If the applicant has been a recipient of other Federal or other government grants, cooperative agreements, or contracts, the applicant must also detail that they have consistently complied with financial and program reporting and auditing requirements. Applicants that will employ, or have access to, personnel who have experience in directing local educational programs that benefit agricultural producers will receive higher rankings.

*2. Review and Selection Process*

Applications will be evaluated using a two-part process. First, each application will be screened by RMA personnel to ensure that it meets the requirements in this announcement. Applications that do not meet the requirements of this announcement or are incomplete will not receive further consideration. Applications that meet announcement requirements will be sorted into the RMA Region in which the applicant proposes to conduct the project and will be presented to a review panel for consideration.

Second, the review panel will meet to consider and discuss the merits of each application. The panel will consist of not less than three independent reviewers. Reviewers will be drawn from USDA, other Federal agencies, and others representing public and private organizations, as needed. After considering the merits of all applications within an RMA Region, panel members will score each application according to the criteria and point values listed above. The panel will then rank each application against others within the RMA Region according to the scores received. A lottery will be used to resolve any instances of a tie score that might have a bearing on funding recommendations. If such a lottery is required, the names of all tied applicants will be entered into a drawing. The first tied applicant drawn will have priority over other tied applicants for funding consideration.

The review panel will report the results of the evaluation to the Manager of FCIC. The panel's report will include the recommended applicants to receive partnership agreements for each RMA Region. Funding will not be provided for an application receiving a score less than 50. Funding will not be provided for an application that is highly similar to a higher-scoring application in the same RMA Region. Highly similar is one that proposes to reach the same producers likely to be reached by another applicant that scored higher by the panel and the same general educational material is proposed to be delivered.

An organization, or group of organizations in partnership, may apply for funding under other FCIC or RMA programs, in addition to the program described in this announcement. However, if the Manager of FCIC determines that an application recommended for funding is sufficiently similar to a project that has been funded or has been recommended to be funded under another RMA or FCIC program, then the Manager may elect to not fund that application in whole or in part. The Manager of FCIC will make the final determination on those applications that will be awarded funding.

## VI. Award Administration Information

*1. Award Notices*

Following approval by the awarding official of RMA of the applications to be selected for funding, project leaders whose applications have been selected for funding will be notified. Within the limit of funds available for such a purpose, the awarding official of RMA shall enter into partnership agreements with those selected applicants. The agreements provide the amount of Federal funds for use in the project

period, the terms and conditions of the award, and the time period for the project. The effective date of the agreement shall be on the date the agreement is executed by both parties and it shall remain in effect for up to one year or through September 30, 2006, whichever is later.

After a partnership agreement has been signed, RMA will extend to award recipients, in writing, the authority to draw down funds for the purpose of conducting the activities listed in the agreement. All funds provided to the applicant by FCIC must be expended solely for the purpose for which the funds are obligated in accordance with the approved agreement and budget, the regulations, the terms and conditions of the award, and the applicability of Federal cost principles. No commitment of Federal assistance beyond the project period is made or implied for any award resulting from this notice.

Notification of denial of funding will be sent to applicants after final funding decisions have been made. Reasons for denial of funding can include, but are not limited to, incomplete applications, applications with evaluation scores that are lower than other applications in an RMA Region, or applications that propose to deliver education to groups of producers in an RMA Region that are largely similar to groups reached in a higher ranked application.

*2. Administrative and National Policy Requirements*

Requirement to Use Program Logo

Applicants awarded partnership agreements will be required to use a program logo and design provided by RMA for all instructional and promotional materials.

Requirement to Provide Project Information to an RMA-selected Contractor

Applicants awarded partnership agreements will be required to assist RMA in evaluating the effectiveness of its educational programs by providing documentation of educational activities and related information to any contractor selected by RMA for program evaluation purposes.

Private Crop Insurance Organizations and Potential Conflicts of Interest

Private organizations that are involved in the sale of Federal crop insurance, or that have financial ties to such organizations, are eligible to apply for funding under this announcement. However, such entities will not be allowed to receive funding to conduct activities that would otherwise be required under a Standard Reinsurance Agreement or any other agreement in effect between FCIC and the entity. Also, such entities will not be allowed to receive funding to conduct activities that could be perceived by producers as promoting one company's services or products over another's. If applying for funding, such organizations are encouraged to be sensitive to potential conflicts of interest and to describe in their application the specific actions they will take to avoid actual and perceived conflicts of interest.

Access to Panel Review Information

Upon written request from the applicant, scores from the evaluation panel, not including the identity of reviewers, will be sent to the applicant after the review and awards process has been completed.

Confidential Aspects of Proposals and Awards

The names of applicants, the names of individuals identified in the applications, the content of applications, and the panel evaluations of applications will all be kept confidential, except to those involved in the review process, to the extent permitted by law. In addition, the identities of review panel members will remain confidential throughout the entire review process and will not be released to applicants. At the end of the fiscal year, names of panel members will be made available. However, panelists will not be identified with the review of any particular application. When an application results in a partnership agreement, that agreement becomes a part of the official record of RMA transactions, available to the public upon specific request. Information that the Secretary of Agriculture determines to be of a confidential, privileged, or proprietary nature will be held in confidence to the extent permitted by law. Therefore, any information that the applicant wishes to be considered confidential, privileged, or proprietary should be clearly marked within an application, including the basis for such designation. The original copy of a proposal that does not result in an award will be retained by RMA for a period of one year. Other copies will be destroyed. Copies of proposals not receiving awards will be released only with the express written consent of the applicant or to the extent required by law. A proposal may be withdrawn at any time prior to award.

Audit Requirements

Applicants awarded partnership agreements are subject to audit.

Prohibitions and Requirements with Regard to Lobbying

Section 1352 of Public Law 101–121, enacted on October 23, 1989, imposes prohibitions and requirements for disclosure and certification related to lobbying on recipients of Federal contracts, grants, cooperative agreements, and loans. It provides exemptions for Indian Tribes and tribal organizations. Current and prospective recipients, and any subcontractors, are prohibited from using Federal funds, other than profits from a Federal contract, for lobbying Congress or any Federal agency in connection with the award of a contract, grant, cooperative agreement, or loan. In addition, for each award action in excess of $100,000 ($150,000 for loans) the law requires recipients and any subcontractors: (1) To certify that they have neither used nor will use any appropriated funds for payment of lobbyists; (2) to disclose the name, address, payment details, and purpose of any agreements with lobbyists whom recipients of their subcontractors will pay with profits or other nonappropriated funds on or after December 22, 1989; and (3) to file quarterly up-dates about the use of lobbyists if material changes occur in their use. The law establishes civil penalties for non-compliance. A copy of the certification and disclosure forms must be submitted with the application and are available at the address and telephone number listed in Section VII. Agency Contact.

Applicable OMB Circulars

All partnership agreements funded as a result of this notice will be subject to the requirements contained in all applicable OMB circulars.

Requirement to Participate in Civil Rights Training

Project leaders of all partnership agreements funded as a result of this notice are required to know and abide by Federal civil rights laws. Agency policies or regulations may require that project leaders attend civil rights training to become fully aware of civil rights responsibilities. In their applications, applicants should budget for possible travel costs associated with receiving this training.

*3. Reporting*

Applicants awarded partnership agreements will be required to submit quarterly progress and financial reports (OMB Standard Form 269) throughout the project period, as well as a final program and financial report not later than 90 days after the end of the project period.

## VII. Agency Contact

**FOR FURTHER INFORMATION CONTACT:** Applicants and other interested parties are encouraged to contact: Michelle Fuller, USDA–RMA–RME, 1400 Independence Ave., SW., Stop 0808, Washington, DC 20250–0808, phone: 202–720–6356, fax: 202–690–3605, e-mail: *RMA.Risk-Ed@rma.usda.gov*. You may also obtain information regarding this announcement from the RMA Web site at: *http://www.rma.usda.gov*.

## VIII. Other Information

Related Programs

Funding availability for this program may be announced at approximately the same time as funding availability for similar but separate programs—CFDA No. 10.455 (Community Outreach and Assistance Partnerships), CFDA No. 10.456 (Risk Management Research Partnerships), CFDA No. 10.458 (Crop Insurance Education in Targeted States), and CFDA No. 10.459 (Commodity Partnerships Small Sessions program). These programs have some similarities, but also key differences. The differences stem from important features of each program's authorizing legislation and different RMA objectives. Prospective applicants should carefully examine and compare the notices for each program.

Signed in Washington, DC, on March 23, 2005.

**Ross J. Davidson, Jr.,**

*Manager, Federal Crop Insurance Corporation.*

[FR Doc. 05–6077 Filed 3–28–05; 8:45 am]

**BILLING CODE 3410–08–P**

---

## DEPARTMENT OF AGRICULTURE

## Federal Crop Insurance Corporation

## Funding Opportunity Title: Commodity Partnerships for Small Agricultural Risk Management Education Sessions (Commodity Partnerships Small Sessions Program)

*Announcement Type:* Notice of Funding Availability for Competitive Partnership Agreements—Initial.

*CFDA Number:* 10.459.

*Dates:* Applications are due 5 p.m. e.d.t., May 31, 2005.

*Executive Summary:* The Federal Crop Insurance Corporation (FCIC), operating through the Risk Management Agency (RMA), announces the availability of approximately $500,000 for Commodity Partnerships for Small Agricultural Risk Management Education Sessions (the Commodity Partnerships Small Sessions Program). The purpose of this partnership agreement program is to deliver training and information in the management of production, marketing, and financial risk to U.S. agricultural producers. The program gives priority to educating producers of crops currently not insured under Federal crop insurance, specialty crops, and underserved commodities, including livestock and forage. A maximum of 50 partnership agreements will be funded, with no more than five in each of the ten designated RMA Regions. The maximum award for any partnership agreement will be $10,000. Recipients of awards must demonstrate non-financial benefits from a partnership agreement and must agree to the substantial involvement of RMA in the project. Funding availability for this program may be announced at approximately the same time as funding availability for similar but separate programs—CFDA No. 10.455 (Community Outreach and Assistance Partnerships), CFDA No. 10.456 (Risk Management Research Partnerships), CFDA No. 10.457 (Commodity Partnerships for Risk Management Education), and CFDA No. 10.458 (Crop Insurance Education in Targeted States). Prospective applicants should carefully examine and compare the notices for each program.

## Full Text of Announcement

## I. Funding Opportunity Description

*Legislative Authority*

The Commodity Partnerships program is authorized under section 522(d)(3)(F) of the Federal Crop Insurance Act (Act) (7 U.S.C. 1522(d)(3)(F)).

*Background*

RMA promotes and regulates sound risk management solutions to improve the economic stability of American agriculture. On behalf of FCIC, RMA does this by offering Federal crop insurance products through a network of private-sector partners, overseeing the creation of new risk management products, seeking enhancements in existing products, ensuring the integrity of crop insurance programs, offering outreach programs aimed at equal access and participation of underserved communities, and providing risk management education and information.

One of RMA's strategic goals is to ensure that its customers are well informed as to the risk management solutions available. This educational goal is supported by section 522(d)(3)(F) of the Act, which authorizes FCIC funding for risk management training and informational efforts for agricultural producers through the formation of partnerships with public and private organizations. With respect to such partnerships, priority is to be given to reaching producers of Priority Commodities, as defined below.

*Definition of Priority Commodities*

For purposes of this program, Priority Commodities are defined as:

- *Agricultural commodities covered by (7 U.S.C. 7333).* Commodities in this group are commercial crops that are not covered by catastrophic risk protection crop insurance, are used for food or fiber (except livestock), and specifically include, but are not limited to, floricultural, ornamental nursery, Christmas trees, turf grass sod, aquaculture (including ornamental fish), and industrial crops.
- *Specialty crops.* Commodities in this group may or may not be covered under a Federal crop insurance plan and include, but are not limited to, fruits, vegetables, tree nuts, syrups, honey, roots, herbs, and highly specialized varieties of traditional crops.
- *Underserved commodities.* This group includes: (a) commodities, including livestock and forage, that are covered by a Federal crop insurance plan but for which participation in an area is below the national average; and (b) commodities, including livestock and forage, with inadequate crop insurance coverage.

A project is considered as giving priority to Priority Commodities if the majority of the educational activities of the project are directed to producers of any of the three classes of commodities listed above or any combination of the three classes.

*Project Goal*

The goal of this program is to ensure that "* * * producers will be better able to use financial management, crop insurance, marketing contracts, and other existing and emerging risk management tools."

*Purpose*

The purpose of the Commodity Partnership Small Session Program is to provide U.S. farmers and ranchers with training and informational opportunities to be able to understand:

- The kinds of risks addressed by existing and emerging risk management tools;
- The features and appropriate use of existing and emerging risk management tools; and
- How to make sound risk management decisions.

## II. Award Information

*Type of Award:* Partnership Agreements, which require the substantial involvement of RMA.

*Funding Availability:* Approximately $500,000 is available in fiscal year 2005 to fund up to 50 partnership agreements. The maximum award for any agreement will be $10,000. It is anticipated that a maximum of five agreements will be funded in each of the ten designated RMA Regions.

In the event that all funds available for this program are not obligated after the maximum number of agreements are awarded or if additional funds become available, these funds may, at the discretion of the Manager of FCIC, be used to award additional applications that score highly by the technical review panel or allocated pro-rata to award recipients for use in broadening the size or scope of awarded projects if agreed to by the recipient.

In the event that the Manager of FCIC determines that available RMA resources cannot support the administrative and substantial involvement requirements of all agreements recommended for funding, the Manager may elect to fund fewer agreements than the available funding might otherwise allow. It is expected that the awards will be made approximately 60 days after the application deadline. All awards will be made and agreements finalized no later than September 30, 2005.

*Location and Target Audience:* RMA Regional Offices and the States serviced within each Region are listed below. Staff from the respective RMA Regional Offices will provide substantial involvement for projects conducted within the Region.

Billings, MT Regional Office: (MT, WY, ND, and SD)
Davis, CA Regional Office: (CA, NV, UT, AZ, and HI)
Jackson, MS Regional Office: (KY, TN, AR, LA, and MS)
Oklahoma City, OK Regional Office: (OK, TX, and NM)
Raleigh, NC Regional Office: (ME, NH, VT, MA, RI, CT, NY, NJ, PA, MD, DE, WV, VA, and NC)
Spokane, WA Regional Office: (WA, ID, OR, and AK)
Springfield, IL Regional Office: (IL, IN, OH, and MI)
St. Paul, MN Regional Office: (MN, WI, and IA)
Topeka, KS Regional Office: (KS, MO, NE, and CO)
Valdosta, GA Regional Office: (AL, GA, SC, FL, and Puerto Rico)

Applicants must designate in their application narratives the RMA Region where educational activities will be conducted and the specific groups of producers within the region that the applicant intends to reach through the project. Priority will be given to producers of Priority Comodities. Applicants proposing to conduct educational activities in more than one RMA Region must submit a separate application for each RMA Region. This requirement is not intended to preclude producers from areas that border a designated RMA Region from participating in that region's educational activities. It is also not intended to prevent applicants from proposing the use of certain informational methods, such as print or broadcast news outlets, that may reach producers in other RMA Regions.

*Maximum Award:* Any application that requests Federal funding of more than $10,000 for a project will be rejected.

*Project Period:* Projects will be funded for a period of up to one year from the project starting date.

*Description of Agreement Award:*

*Recipient Tasks*

In conducting activities to achieve the purpose and goal of this program in a designated RMA Region, the award recipient will be responsible for performing the following tasks:

- Finalize and provide specific details for the Statement of Work (Form RME–2). The Statement of Work must describe the specific manner in which various subtasks for the project will be completed, the dates by which each task and subtask will be completed, the specific location for all promotional and educational activities, and the partners that will have responsibility for each task and subtask. Task milestones must be listed in a way that ensures that progress can be measured at various stages throughout the life of the project. The Statement of Work must also provide for the substantial involvement of RMA in the project. All partnership agreements resulting from this announcement will include Statements of Work based on Form RME–2. All applicants must use this format for proposing Statements of Work.
- Assemble speaker/presentation materials appropriate for risk management education and information within the designated RMA Region. This will include: (a) gathering existing instructional materials that meet the local needs of agricultural producers; (b) identifying gaps in existing instructional materials; and (c) developing new materials or modifying existing instructional materials to fill existing gaps.
- Develop and conduct a promotional program. This program will include activities using media, newsletters, publications, or other appropriate informational dissemination techniques that are designed to: (a) raise awareness for risk management; (b) inform producers of the availability of risk management tools; and (c) inform producers and agribusiness leaders in the designated RMA Region of training and informational opportunities.
- Deliver risk management training and informational opportunities to agricultural producers and agribusiness professionals in the designated RMA Region. This will include organizing and delivering educational activities using the instructional materials identified earlier. Activities should be directed primarily to agricultural producers, but may include those agribusiness professionals that have frequent opportunities to advise producers on risk management tools and decisions.
- Document all educational activities conducted under the partnership agreement and the results of such activities, including criteria and indicators used to evaluate the success of the program. The recipient will also be required to provide information to an RMA-selected contractor to evaluate all educational activities and advise RMA as to the effectiveness of activities.

*RMA Activities*

FCIC, working through RMA, will be substantially involved during the performance of the funded project through RMA's ten Regional Offices. Potential types of substantial involvement may include, but are not limited to the following activities.

- Assist in the selection of subcontractors and project staff.
- Collaborate with the recipient in assembling, reviewing, and approving risk management materials for producers in the designated RMA Region.
- Collaborate with the recipient in reviewing and approving a promotional program for raising awareness for risk management and for informing producers of training and informational opportunities in the RMA Region.
- Collaborate with the recipient on the delivery of education to producers and agribusiness leaders in the RMA Region. This will include: (a) reviewing and approving in advance all producer and agribusiness leader educational activities; (b) advising the project leader on technical issues related to crop insurance education and information; and (c) assisting the project leader in informing crop insurance professionals

about educational activity plans and scheduled meetings.

Applications that do not contain substantial involvement by RMA will be rejected.

*Other Tasks*

In addition to the specific, required tasks listed above, the applicant may propose additional tasks that would contribute directly to the purpose of this program. For any proposed additional task, the applicant must identify the objective of the task, the specific subtasks required to meet the objective, specific time lines for performing the subtasks, and the specific responsibilities of partners. The applicant must also identify specific ways in which RMA would have substantial involvement in the proposed project task.

**III. Eligibility Information**

*1. Eligible Applicants*

Eligible applicants include State departments of agriculture, universities, non-profit agricultural organizations, and other public or private organizations with the capacity to lead a local program of risk management education for farmers and ranchers in an RMA Region. Individuals are not eligible applicants. Although an applicant may be eligible to compete for an award based on its status as an eligible entity, other factors may exclude an applicant from receiving Federal assistance under this program governed by Federal law and regulations (*e.g.,* debarment and suspension; a determination of non-performance on a prior contract, cooperative agreement, grant or partnership; a determination of a violation of applicable ethical standards). Applications from ineligible or excluded persons will be rejected in their entirety.

*2. Cost Sharing or Matching*

This program has neither a cost sharing nor a matching requirement.

*3. Other—Non-financial Benefits*

To be eligible, applicants must also be able to demonstrate that they will receive a non-financial benefit as a result of a partnership agreement. Non-financial benefits must accrue to the applicant and must include more than the ability to provide employment income to the applicant or for the applicant's employees or the community. The applicant must demonstrate that performance under the partnership agreement will further the specific mission of the applicant (such as providing research or activities necessary for graduate or other students to complete their educational program). Applications that do not demonstrate a non-financial benefit will be rejected.

**IV. Application and Submission Information**

*1. Address To Request Application Package*

Program application materials for the Commodity Partnerships Small Sessions Program under this announcement may be downloaded from the RMA Web site at: *http://www.rma.usda.gov.* Applicants may also request application materials from: Michelle Fuller, USDA–RMA–RME, 1400 Independence Ave., SW., Stop 0808, Washington, DC 20250–0808, phone: (202) 720–6356, fax: (202) 690–3605, e-mail: *RMA.Risk-Ed@rma.usda.gov.*

*2. Content and Form of Application Submission*

A complete and valid application package must include an electronic copy (Microsoft Word format preferred) of the narrative portion (Forms RME 1 and RME 2) of the application package on diskette or compact disc and an original and two copies of the completed and signed application must be submitted in one package at the time of initial submission. RMA would appreciate receiving nine additional copies to facilitate the panel review process (twelve applications in all), which must include the following:

1. A completed and signed OMB Standard Form 424, ''Application for Federal Assistance.''

2. A completed and signed OMB Standard Form 424-A, ''Budget Information—Non-construction Programs.'' Indirect costs allowed for projects submitted under this announcement will be limited to ten (10) percent of the total direct cost of the partnership agreement. Federal funding requested (the total of direct and indirect costs) must not exceed $10,000. Applicants may be asked to provide a copy of their indirect cost rate negotiated with their cognizant agency.

3. A completed and signed OMB Standard Form 424-B, ''Assurances, Non-constructive Programs.''

4. Risk Management Education Project Narrative (Form RME–1). Complete all required parts of Form RME–1:

Part I—Title Page

Part II—A written narrative of no more than 2 single-sided pages which will provide reviewers with sufficient information to effectively evaluate the merits of the application according to the evaluation criteria listed in this notice. Although a Statement of Work, which is the second evaluation criterion, is to be completed in detail in RME Form-2, applicants may wish to highlight certain unique features of the Statement of Work in Part II for the benefit of the evaluation panel. If your narrative exceeds the page limit, only the first 2 pages will be reviewed.

- 12 point, unreduced font size.
- 8.5 by 11 inch paper
- One-inch margins on each page.
- Printed only on one side of paper.
- Unbound, held together only by rubber bands or metal clips; not bound in any other way

Part III—A Budget Narrative, describing how the categorical costs listed on SF 424–A are derived.

Part IV—Provide a ''Statement of Non-financial Benefits.'' (Refer to Section III, Eligibility Information, above).

5. ''Statement of Work,'' Form RME–2, which identifies tasks and subtasks in detail, expected completion dates and deliverables, and RMA's substantial involvement role for the proposed project.

6. (Optional) An optional appendix containing project participant resumes, letters of partnership support, or other materials that the applicant believes will directly support the information provided in the narrative. Applicants should not seek letters of partnership support from RMA Regional Offices because these offices will automatically provide substantial involvement in all projects that are awarded funding.

7. A completed and signed OMB Standard Form LLL, ''Disclosure of Lobbying Activities.''

8. A completed and signed AD–1047, ''Certification Regarding Debarment, Suspension and Other Responsibility Matters—Primary Covered Transactions.''

9. A completed and signed AD–1049, ''Certification Regarding Drug-Free Workplace.''

*3. Submission Dates and Times*

*Applications Deadline:* 5 p.m. e.d.t., May 31, 2005. Applicants are responsible for ensuring that RMA receives a complete application package by the closing date and time. Incomplete or late application packages will not receive further consideration.

*4. Intergovernmental Review*

Not applicable.

*5. Funding Restrictions*

Partnership agreement funds may not be used to:

a. Plan, repair, rehabilitate, acquire, or construct a building or facility including a processing facility;

b. Purchase, rent, or install fixed equipment;

c. Repair or maintain privately owned vehicles;

d. Pay for the preparation of the partnership agreement application;

e. Fund political activities;

f. Alcohol, food, beverage or entertainment;

g. Pay costs incurred prior to receiving a partnership agreement;

h. Fund any activities prohibited in 7 CFR Parts 3015 and 3019, as applicable.

*6. Other Submission Requirements*

*Mailed submissions:* Applications submitted through express, overnight mail or another delivery service will be considered as meeting the announced deadline if they are received in the mailroom at the address stated below for express, overnight mail or another delivery service on or before the deadline. Applicants are cautioned that express, overnight mail or other delivery services do not always deliver as agreed. Applicants should take this into account because failure of such delivery services will not extend the deadline. Mailed applications will be considered as meeting the announced deadline if they are received on or before the deadline in the mailroom at the address stated below for mailed applications. Applicants are responsible for mailing applications well in advance, to ensure that applications are received on or before the deadline time and date. Applicants using the U.S. Postal Services should allow for the extra time for delivery due to the additional security measures that mail delivered to government offices in the Washington DC area requires.

Address when using private delivery services or when hand delivering: Attention: Risk Management Education Program, USDA/RMA, 1250 Maryland Avenue, SW., Suite 508, Washington, DC 20024.

Address when using U.S. Postal Services: Attention: Risk Management Education Program, USDA/RMA, Stop 0808, 1400 Independence Ave, SW., Washington, DC 20250–0808.

*Electronic submissions:* Although the application package may be downloaded electronically, RMA cannot accommodate transmissions of application submissions by facsimile or through other electronic media. Therefore, applications transmitted electronically will not be accepted regardless of the date or time of submission or the time of receipt.

*Acknowledgment of Applications*

Receipt of applications will be acknowledged by e-mail, whenever possible. Therefore, applicants are encouraged to provide e-mail addresses in their applications. If an e-mail address is not indicated on an application, receipt will be acknowledged by letter. There will be no notification of incomplete, unqualified or unfunded applications until after the awards have been made. When received by RMA, applications will be assigned an identification number. This number will be communicated to applicants in the acknowledgement of receipt of applications. An application's identification number should be referenced in all correspondence regarding the application. If the applicant does not receive an acknowledgement within 15 days of the submission deadline, the applicant should notify RMA's point of contact indicated in Section VII, Agency Contact.

## V. Application Review Information

*1. Criteria*

Applications submitted under the Commodity Partnerships Small Sessions program will be evaluated within each RMA Region according to the following criteria:

Priority—Maximum 10 Points

The applicant can submit projects that are not related to Priority Commodities. However, priority will be given to projects relating to Priority Commodities and the degree in which such projects relate to the Priority Commodities. Projects that relate solely to Priority Commodities will be eligible for the most points.

Project Benefits—Maximum 15 Points

The applicant must demonstrate that the project benefits to farmers and ranchers warrant the funding requested. Applicants will be scored according to the extent they can: (a) Reasonably estimate the number of producers reached through the various educational activities described in the Statement of Work; (b) justify such estimates with clear specifics; (c) identify the actions producers will likely be able to take as a result of the activities described in the Statement of Work; and (d) identify the specific measures for evaluating results that will be employed in the project. Reviewers' scoring will be based on the scope and reasonableness of the applicant's estimates of producers reached through the project, clear descriptions of specific expected project benefits, and well-designed methods for measuring the project's results and effectiveness.

Statement of Work—Maximum 20 Points

The applicant must produce a clear and specific Statement of Work for the project. For each of the tasks contained in the Description of Agreement Award (refer to Section II Award Information), the applicant must identify and describe specific subtasks, responsible entities, expected completion dates, RMA substantial involvement, and deliverables that will further the purpose of this program. Applicants will obtain a higher score to the extent that the Statement of Work is specific, measurable, reasonable, has specific deadlines for the completion of subtasks, relates directly to the required activities and the program purpose described in this announcement, and is sensitive to the needs of producers that are small, have limited resources, are minorities, or are beginning in a farming or ranching business. Applicants are required to submit this Statement of Work on Form RME–2.

Project Management—Maximum 15 Points

The applicant must demonstrate an ability to implement sound and effective project management practices. Higher scores will be awarded to applicants that can demonstrate organizational skills, leadership, and experience in delivering services or programs that assist agricultural producers in the respective RMA Region. If the applicant has been a recipient of other Federal or other government grants, cooperative agreements, or contracts, the applicant must also detail that they have consistently complied with financial and program reporting and auditing requirements. Applicants that will employ, or have access to, personnel who have experience in directing local educational programs that benefit agricultural producers will receive higher rankings.

*2. Review and Selection Process*

Applications will be evaluated using a two-part process. First, each application will be screened by RMA personnel to ensure that it meets the requirements in this announcement. Applications that do not meet the requirements of this announcement or that are incomplete will not receive further consideration. Applications that meet announcement requirements will be sorted into the RMA Region in which the applicant proposes to conduct the project and will be presented to a review panel for consideration.

Second, the review panel will meet to consider and discuss the merits of each

application. The panel will consist of not less than three independent reviewers. Reviewers will be drawn from USDA, other Federal agencies, and others representing public and private organizations, as needed. After considering the merits of all applications within an RMA Region, panel members will score each application according to the criteria and point values listed above. The panel will then rank each application against others within the RMA Region according to the scores received. A lottery will be used to resolve any instances of a tie score that might have a bearing on funding recommendations. If such a lottery is required, the names of all tied applicants will be entered into a drawing. The first tied applicant drawn will have priority over other tied applicants for funding consideration.

The review panel will report the results of the evaluation to the Manager of FCIC. The panel's report will include the recommended applicants to receive partnership agreements for each RMA Region. Funding will not be provided for an application receiving a score less than 25. Funding will not be provided for an application that is highly similar to a higher-scoring application in the same RMA Region. Highly similar is one that proposes to reach the same producers likely to be reached by another applicant that scored higher by the panel and the same general educational material is proposed to be delivered. An organization, or group of organizations in partnership, may apply for funding under other FCIC or RMA programs, in addition to the program described in this announcement. However, if the Manager of FCIC determines that an application recommended for funding is sufficiently similar to a project that has been funded or has been recommended to be funded under another RMA or FCIC program, then the Manager may elect to not fund that application in whole or in part. The Manager of FCIC will make the final determination on those applications that will be awarded funding.

## VI. Award Administration Information

### *1. Award Notices*

Following approval by the awarding official of RMA of the applications to be selected for funding, project leaders whose applications have been selected for funding will be notified. Within the limit of funds available for such a purpose, the awarding official of RMA shall enter into partnership agreements with those selected applicants. The agreements provide the amount of Federal funds for use in the project period, the terms and conditions of the award, and the time period for the project. The effective date of the agreement shall be on the date the agreement is executed by both parties and it shall remain in effect for up to one year or through September 30, 2006, whichever is later. After a partnership agreement has been signed, RMA will extend to award recipients, in writing, the authority to draw down funds for the purpose of conducting the activities listed in the agreement. All funds provided to the applicant by FCIC must be expended solely for the purpose for which the funds are obligated in accordance with the approved agreement and budget, the regulations, the terms and conditions of the award, and the applicability of Federal cost principles. No commitment of Federal assistance beyond the project period is made or implied for any award resulting from this notice.

Notification of denial of funding will be sent to applicants after final funding decisions have been made. Reasons for denial of funding can include, but are not limited to, incomplete applications, applications with evaluation scores that are lower that other applications in an RMA Region, or applications that are highly similar to a higher-scoring application in the same RMA Region. Highly similar is an application that proposes to reach the same producers likely to be reached by another applicant that scored higher by the panel and the same general educational material is proposed to be delivered.

### *2. Administrative and National Policy Requirements*

#### Requirement To Use Program Logo

Applicants awarded partnership agreements will be required to use a program logo and design provided by RMA for all instructional and promotional materials.

#### Requirement To Provide Project Information to an RMA-selected Contractor

Applicants awarded partnership agreements will be required to assist RMA in evaluating the effectiveness of its educational programs by providing documentation of educational activities and related information to any contractor selected by RMA for program evaluation purposes.

#### Private Crop Insurance Organizations and Potential Conflicts of Interest

Private organizations that are involved in the sale of Federal crop insurance, or that have financial ties to such organizations, are eligible to apply for funding under this announcement. However, such entities will not be allowed to receive funding to conduct activities that would otherwise be required under a Standard Reinsurance Agreement or any other agreement in effect between FCIC and the entity. Also, such entities will not be allowed to receive funding to conduct activities that could be perceived by producers as promoting one company's services or products over another's. If applying for funding, such organizations are encouraged to be sensitive to potential conflicts of interest and to describe in their application the specific actions they will take to avoid actual and perceived conflicts of interest.

#### Access to Panel Review Information

Upon written request from the applicant, scores from the evaluation panel, not including the identity of reviewers, will be sent to the applicant after the review and awards process has been completed.

#### Confidential Aspects of Proposals and Awards

The names of applicants, the names of individuals identified in the applications, the content of applications, and the panel evaluations of applications will all be kept confidential, except to those involved in the review process, to the extent permitted by law. In addition, the identities of review panel members will remain confidential throughout the entire review process and will not be released to applicants. At the end of the fiscal year, names of panel members will be made available. However, panelists will not be identified with the review of any particular application.

When an application results in a partnership agreement, that agreement becomes a part of the official record of RMA transactions, available to the public upon specific request. Information that the Secretary of Agriculture determines to be of a confidential, privileged, or proprietary nature will be held in confidence to the extent permitted by law. Therefore, any information that the applicant wishes to be considered confidential, privileged, or proprietary should be clearly marked within an application, including the basis for such designation. The original copy of a proposal that does not result in an award will be retained by RMA for a period of one year. Other copies will be destroyed. Copies of proposals not receiving awards will be released only with the express written consent of the applicant or to the extent required by law. A proposal may be withdrawn at any time prior to award.

Audit Requirements

Applicants awarded partnership agreements are subject to audit.

Prohibitions and Requirements With Regard to Lobbying

Section 1352 of Pub. L. 101–121, enacted on October 23, 1989, imposes prohibitions and requirements for disclosure and certification related to lobbying on recipients of Federal contracts, grants, cooperative agreements, and loans. It provides exemptions for Indian Tribes and tribal organizations. Current and prospective recipients, and any subcontractors, are prohibited from using Federal funds, other than profits from a Federal contract, for lobbying Congress or any Federal agency in connection with the award of a contract, grant, cooperative agreement, or loan. In addition, for each award action in excess of $100,000 ($150,000 for loans) the law requires recipients and any subcontractors: (1) To certify that they have neither used nor will use any appropriated funds for payment of lobbyists; (2) to disclose the name, address, payment details, and purpose of any agreements with lobbyists whom recipients of their subcontractors will pay with profits or other nonappropriated funds on or after December 22, 1989; and (3) to file quarterly up-dates about the use of lobbyists if material changes occur in their use. The law establishes civil penalties for non-compliance. A copy of the certification and disclosure forms must be submitted with the application and are available at the address and telephone number listed in Section VII. Agency Contact.

Applicable OMB Circulars

All partnership agreements funded as a result of this notice will be subject to the requirements contained in all applicable OMB circulars.

Requirement To Participate in Civil Rights Training

Project leaders of all partnership agreements funded as a result of this notice are required to know and abide by Federal civil rights laws. Agency policies or regulations may require that project leaders attend civil rights training to become fully aware of civil rights responsibilities. In their applications, applicants should budget for possible travel costs associated with receiving this training.

*3. Reporting*

Applicants awarded partnership agreements will be required to submit quarterly progress and financial reports (OMB Standard Form 269) throughout the project period, as well as a final program and financial report not later than 90 days after the end of the project period.

**VII. Agency Contact**

*For Further Information Contact:* Applicants and other interested parties are encouraged to contact: Michelle Fuller, USDA–RMA–RME, 1400 Independence Ave., SW., Stop 0808, Washington, DC 20250–0808, phone: (202) 720–6356, fax: (202) 690–3605, e-mail: *RMA.Risk–Ed@rma.usda.gov*. You may also obtain information regarding this announcement from the RMA Web site at: *http://www.rma.usda.gov*.

**VIII. Other Information**

*Related Programs*

Funding availability for this program may be announced at approximately the same time as funding availability for similar but separate programs—CFDA No. 10.455 (Community Outreach and Assistance Partnerships), CFDA No. 10.456 (Risk Management Research Partnerships), CFDA No. 10.457 (Commodity Partnerships for Risk Management Education), and CFDA No. 10.458 (Crop Insurance Education in Targeted States). These programs have some similarities, but also key differences. The differences stem from important features of each program's authorizing legislation and different RMA objectives. Prospective applicants should carefully examine and compare the notices for each program.

Signed in Washington, DC, on March 23, 2005.

**Ross J. Davidson, Jr.,**

*Manager, Federal Crop Insurance Corporation.*

[FR Doc. 05–6079 Filed 3–28–05; 8:45 am]

BILLING CODE 3410–08–P

---

## DEPARTMENT OF AGRICULTURE

### Federal Crop Insurance Corporation

### Crop Insurance Education in Targeted States (Targeted States Program)

*Announcement Type:* Notice of Funding Availability for Competitive Cooperative Agreements—Initial.

*CFDA Number:* 10.458.

*Dates:* Applications are due 5 p.m. EDT, May 31, 2005.

*Executive Summary:* The Federal Crop Insurance Corporation (FCIC), operating through the Risk Management Agency (RMA), announces the availability of approximately $4.5 million to fund cooperative agreements under the Crop Insurance Education in Targeted States program (the Targeted States program). The purpose of this cooperative agreement program is to deliver crop insurance education and information to U.S. agricultural producers in certain States that have been designated as historically underserved with respect to crop insurance. The states, collectively referred to as Targeted States, are Connecticut, Delaware, Maine, Maryland, Massachusetts, Nevada, New Hampshire, New Jersey, New York, Pennsylvania, Rhode Island, Utah, Vermont, West Virginia, and Wyoming. A maximum of 15 cooperative agreements will be funded, one in each of the 15 Targeted States. The maximum award for varies by State. Recipients of awards must agree to the substantial involvement of RMA in the project. Funding availability for this program may be announced at approximately the same time as funding availability for similar but separate programs—CFDA No. 10.455 (Community Outreach and Assistance Partnerships), CFDA No. 10.456 (Risk Management Research Partnerships) CFDA No. 10.457 (Commodity Partnerships for Risk Management Education), and CFDA No. 10.459 (Commodity Partnerships for Small Agricultural Risk Management Education Sessions). Prospective applicants should carefully examine and compare the notices for each program.

**Full Text of Announcement**

**I. Funding Opportunity Description**

*Legislative Authority*

The Targeted States program is authorized under section 524(a)(2) of the Federal Crop Insurance Act (Act).

*Background*

RMA promotes and regulates sound risk management solutions to improve the economic stability of American agriculture. On behalf of FCIC, RMA does this by offering Federal crop insurance products through a network of private-sector partners, overseeing the creation of new risk management products, seeking enhancements in existing products, ensuring the integrity of crop insurance programs, offering outreach programs aimed at equal access and participation of underserved communities, and providing risk management education and information.

One of RMA's strategic goals is to ensure that its customers are well informed as to the risk management solutions available. This educational goal is supported by section 524(a)(2) of the Act. This section authorizes funding for the establishment of crop insurance education and information programs in

States that have historically been underserved by Federal crop insurance program. In accordance with the Act, the fifteen States designated as ''underserved'' are Connecticut, Delaware, Maine, Maryland, Massachusetts, Nevada, New Hampshire, New Jersey, New York, Pennsylvania, Rhode Island, Utah, Vermont, West Virginia, and Wyoming (collectively referred to as ''Targeted States'').

*Project Goal*

The goal of the Targeted States program is to ensure that farmers and ranchers in the Targeted States are sufficiently informed so as to take full advantage of existing and emerging crop insurance products.

*Purpose*

The purpose of the Targeted States program is to provide farmers and ranchers in Targeted States with education and information to be able to understand:

- The kinds of risk addressed by crop insurance;
- The features of existing and emerging crop insurance products;
- The use of crop insurance in the management of risk; and
- How the use of crop insurance can affect other risk management decisions, such as the use of marketing and financial tools.

## II. Award Information

*Type of Award:* Cooperative Agreements, which require the substantial involvement of RMA.

*Funding Availability:* Approximately $4,500,000 is available in fiscal year 2005 to fund up to 15 cooperative agreements, a maximum of one agreement for each of the Targeted States. The maximum funding amount anticipated for each Targeted State's agreement is as follows. Applicants should apply for funding for that Targeted State where applicant intends on delivering educational activities.

| | |
|---|---|
| Maine | $225,000 |
| New Hampshire | 173,000 |
| Vermont | 226,000 |
| Connecticut | 225,000 |
| Rhode Island | 157,000 |
| Massachusetts | 209,000 |
| New York | 617,000 |
| New Jersey | 272,000 |
| Pennsylvania | 754,000 |
| Maryland | 370,000 |
| Delaware | 261,000 |
| West Virginia | 209,000 |
| Nevada | 208,000 |
| Utah | 301,000 |
| Wyoming | 293,000 |
| Total | $4,500,000 |

Funding amounts were determined by first allocating an equal amount of $150,000 to each Targeted State. Remaining funds were allocated on a pro rata basis according to each Targeted State's share of 2000 agricultural cash receipts relative to the total for all Targeted States. Both allocations were totalled for each Targeted State and rounded to the nearest $1,000.

In the event that additional funds become available under this program or in the event that no application for a given Targeted State is recommended for funding by the evaluation panel, these additional funds may, at the discretion of the Manager of FCIC, be allocated pro-rata to State award recipients for use in broadening the size or scope of awarded projects within the Targeted State If agreed to by the recipient. In the event that the Manager of FCIC determines that available RMA resources cannot support the administrative and substantial involvement requirements of all agreements recommended for funding, the Manager may elect to fund fewer agreements than the available funding might otherwise allow. It is expected that the awards will be made approximately 60 days after the application deadline. All awards will be made and agreements finalized no later than September 30, 2005.

*Location and Target Audience:* Targeted States serviced by RMA Regional Offices are listed below. Staff from the respective RMA Regional Offices will provide substantial involvement for Targeted States projects conducted within the respective Regions.

Billings, MT Regional Office: (WY)
Davis, CA Regional Office: (NV and UT)
Raleigh, NC Regional Office: (ME, NH, VT, MA, RI, CT, NY, NJ, PA, MD, DE, and WV)

Applicants must designate in their application narrative the Targeted State where crop insurance educational activities for the project will be delivered. Applicants may apply to deliver education to producers in more than one Targeted State, but a separate application must be submitted for each Targeted State.

*Maximum Award:* Any application that requests Federal funding of more than the amount listed above for a project in a given Targeted State will be rejected.

*Project Period:* Projects will be funded for a period of up to one year from the project starting date.

*Description of Agreement Award:* Recipient Tasks. In conducting activities to achieve the purpose and goal of this program in a designated Targeted State, the award recipient will be responsible for performing the following tasks:

- Finalize and provide specific details for the Statement of Work (Form RME–2). The Statement of Work must describe the specific manner in which various subtasks for the project will be completed, the dates by which each task will be completed, the specific locations for all promotional and educational activities, and the partners that will have responsibility for each task and subtask. Task milestones must be listed in a way that ensures that progress can be measured at various stages throughout the life of the project. The Statement of Work must also provide for the substantial involvement of RMA in the project. All cooperative agreements resulting from this announcement will include Statements of Work based on Form RME–2. All applicants must use this format for proposing Statements of Work.
- Assemble instructional materials appropriate for crop insurance education and information within the designated Targeted State. This will include: (a) gathering existing instructional materials that meet the local needs of agricultural producers; (b) identifying gaps in existing instructional materials; and (c) developing new materials or modifying existing instructional materials to fill existing gaps.
- Develop and conduct a promotional program. This program will include activities using media, newsletters, publications, or other appropriate informational dissemination techniques that are designed to: (a) Raise awareness for crop insurance; (b) inform producers of the availability of crop insurance; and (c) inform producers and agribusiness leaders in the designated Targeted State of training and informational opportunities.
- Deliver crop insurance training and informational opportunities to agricultural producers and agribusiness professionals in the designated Targeted State. This will include organizing and delivering educational activities using the instructional materials identified earlier. Activities should be directed primarily to agricultural producers, but may include those agribusiness professionals that have frequent opportunities to advise producers on crop insurance tools and decisions.
- Document all educational activities conducted under the cooperative agreement and the results of such activities, including criteria and indicators used to evaluate the success of the program. The recipient will also

be required to provide information to an RMA-selected contractor to evaluate all educational activities and advise RMA as to the effectiveness of activities.

RMA Activities. FCIC, working through RMA, will be substantially involved during the performance of the funded project through three of RMA's ten Regional Offices. Potential types of substantial involvement may include, but are not limited to the following activities.

- Assist in the selection of subcontractors and project staff.
- Collaborate with the recipient in assembling, reviewing, and approving risk management materials for producers in the designated RMA Region.
- Collaborate with the recipient in reviewing and approving a promotional program for raising awareness for risk management and for informing producers of training and informational opportunities in the RMA Region.
- Collaborate with the recipient on the delivery of education to producers and agribusiness leaders in the RMA Region. This will include: (a) reviewing and approving in advance all producer and agribusiness leader educational activities; (b) advising the project leader on technical issues related to crop insurance education and information; and (c) assisting the project leader in informing crop insurance professionals about educational activity plans and scheduled meetings.

Applications that do not contain substantial involvement by RMA will be rejected.

Other Tasks. In addition to the specific, required tasks listed above, the applicant may propose additional tasks that would contribute directly to the purpose of this program. For any proposed additional task, the applicant must identify the objective of the task, the specific subtasks required to meet the objective, specific time lines for performing the subtasks, and the specific responsibilities of partners. The applicant must also identify specific ways in which RMA would have substantial involvement in the proposed project task.

## III. Eligibility Information

### *1. Eligible Applicants*

Eligible applicants include State departments of agriculture, universities, non-profit agricultural organizations, and other public or private organizations with the capacity to lead a local program of crop insurance education for farmers and ranchers within a Targeted State. Individuals are eligible applicants. Although an applicant may be eligible to compete for an award based on its status as an eligible entity, other factors may exclude an applicant from receiving Federal assistance under this program governed by Federal law and regulations (e.g. debarment and suspension; a determination of non-performance on a prior contract, cooperative agreement, grant or partnership; a determination of a violation of applicable ethical standards). Applications from ineligible or excluded persons will be rejected in their entirety.

### *2. Cost Sharing or Matching*

This program has neither a cost sharing nor a matching requirement.

## IV. Application and Submission Information

### *1. Address To Request Application Package*

Program application materials for the Targeted States program under this announcement may be downloaded from the RMA website at: *http://www.rma.usda.gov*. Applicants may also request application materials from: Michelle Fuller, USDA–RMA–RME, 1400 Independence Ave. SW., Stop 0808, (Portals Bldg., Suite 508), Washington, DC 20250–0808, phone: (202) 720–6356, fax: (202) 690–3605, e-mail: *RMA.Risk-Ed@rma.usda.gov*.

### *2. Content and Form of Application Submission*

A complete and valid application package must include an electronic copy (Microsoft Word format preferred) of the narrative portion (Forms RME 1 and RME 2) of the application package on diskette or compact disc and an original and two copies of the completed and signed application must be submitted in one package at the time of initial submission. RMA would appreciate receiving nine additional copies to facilitate the panel review process (twelve applications in all), which must include the following:

1. A completed and signed OMB Standard Form 424, ''Application for Federal Assistance.''
2. A completed and signed OMB Standard Form 424–A, ''Budget Information—Non-construction Programs.'' Indirect costs allowed for projects submitted under this announcement will be limited to ten (10) percent of the total direct cost of the partnership or cooperative agreement. Federal funding requested (the total of direct and indirect costs) must not exceed the maximum level for the respective Targeted State, as specified in Section II, Award Information. Applicants may be asked to provide a copy of their indirect cost rate negotiated with their cognizant agency.
3. A completed and signed OMB Standard Form 424–B, ''Assurances, Non-constructive Programs.''
4. Risk Management Education Project Narrative (Form RME–1). Complete all required parts of Form RME–1:

Part I—Title Page.

Part II—A written narrative of no more than 10 single-sided pages which will provide reviewers with sufficient information to effectively evaluate the merits of the application according to the evaluation criteria listed in this notice. Although a Statement of Work, which is the second evaluation criterion, is to be completed in detail in RME Form-2, applicants may wish to highlight certain unique features of the Statement of Work in Part II for the benefit of the evaluation panel. If your narrative exceeds the page limit, only the first 10 pages will be reviewed.

- 12 point, unreduced font size.
- 8.5 by 11 inch paper.
- One-inch margins on each page.
- Printed on only one side of paper.
- Held together only by rubber bands or metal clips; not bound in any other way

Part III—A Budget Narrative, describing how the categorical costs listed on SF 424–A are derived.

Part IV—(Not required for Targeted States Program).

5. ''Statement of Work,'' (Form RME–2), which identifies tasks and subtasks in detail, expected completion dates and deliverables, and RMA's substantial involvement role for the proposed project.
6. (Optional) An optional appendix containing project participant resumes, letters of partnership support, or other materials that the applicant believes will directly support the information provided in the narrative. Applicants should not seek letters of partnership support from RMA Regional Offices because these offices will automatically provide substantial involvement in all projects that are awarded funding.
7. A completed and signed OMB Standard Form LLL, ''Disclosure of Lobbying Activities.''
8. A completed and signed AD–1047, ''Certification Regarding Debarment, Suspension and Other Responsibility Matters—Primary Covered Transactions.''
9. A completed and signed AD–1049, ''Certification Regarding Drug-Free Workplace.''

### *3. Submission Dates and Times*

*Applications Deadline:* 5 p.m. EDT, May 31, 2005. Applicants are

responsible for ensuring that RMA receives a complete application package by the closing date and time. Incomplete or late application packages will not receive further consideration.

*4. Intergovernmental Review*

Not applicable.

*5. Funding Restrictions*

Cooperative agreement funds may not be used to:

a. Plan, repair, rehabilitate, acquire, or construct a building or facility including a processing facility;

b. Purchase, rent, or install fixed equipment;

c. Repair or maintain privately owned vehicles;

d. Pay for the preparation of the cooperative agreement application;

e. Fund political activities;

f. Alcohol, food, beverage, or entertainment;

g. Pay costs incurred prior to receiving a cooperative agreement;

h. Fund any activities prohibited in 7 CFR parts 3015 and 3019, as applicable.

*6. Other Submission Requirements*

*Mailed submissions:* Applications submitted through express, overnight mail or another delivery service will be considered as meeting the announced deadline if they are received in the mailroom at the address stated below for express, overnight mail or another delivery service on or before the deadline. Applicants are cautioned that express, overnight mail or other delivery services do not always deliver as agreed. Applicants should take this into account because failure of such delivery services will not extend the deadline. Mailed applications will be considered as meeting the announced deadline if they are received on or before the deadline in the mailroom at the address stated below for mailed applications. Applicants are responsible for mailing applications well in advance, to ensure that applications are received on or before the deadline time and date. Applicants using the U.S. Postal Service should allow for the extra time for delivery due to the additional security measures that mail delivered to government offices in the Washington, DC area requires.

Address when using private delivery services or when hand delivering:

Attention: Risk Management Education Program, USDA/RMA, 1250 Maryland Avenue, SW., Suite 508, Washington, DC 20024.

Address when using U.S. Postal Services:

Attention: Risk Management Education Program, USDA/RMA, Stop 0808, 1400 Independence Ave, SW., Washington, DC 20250–0808.

*Electronic submissions:* Although the application package may be downloaded electronically, RMA cannot accommodate transmissions of application submissions by facsimile or through other electronic media. Therefore, applications transmitted electronically will not be accepted regardless of the date or time of submission or the time of receipt.

Acknowledgement of Applications

Receipt of applications will be acknowledged by e-mail, whenever possible. Therefore, applicants are encouraged to provide e-mail addresses in their applications. If an e-mail address is not indicated on an application, receipt will be acknowledged by letter. There will be no notification of incomplete, unqualified or unfunded applications until the awards have been made. When received by RMA, applications will be assigned an identification number. This number will be communicated to applicants in the acknowledgement of receipt of applications. An application's identification number should be referenced in all correspondence regarding the application. If the applicant does not receive an acknowledgement within 15 days of the submission deadline, the applicant should notify RMA's point of contact indicated in Section VII, Agency Contact.

## V. Application Review Information

*1. Criteria*

Applications submitted under the Targeted States program will be evaluated within each Targeted State according to the following criteria:

Project Benefits—Maximum 35 Points

The applicant must demonstrate that the project benefits to farmers and ranchers warrant the funding requested. Applicants will be scored according to the extent they can: (a) Reasonably estimate the number of producers reached through the various educational activities described in the Statement of Work; (b) justify such estimates with clear specifics; (c) identify the actions producers will likely be able to take as a result of the activities described in the Statement of Work; and (d) identify the specific measures for evaluating results that will be employed in the project. Reviewers' scoring will be based on the scope and reasonableness of the applicant's estimates of producers reached through the project, clear descriptions of specific expected project benefits, and well-designed methods for measuring the project's results and effectiveness.

Statement of Work—Maximum 35 Points

The applicant must produce a clear and specific Statement of Work for the project. For each of the tasks contained in the Description of Agreement Award (refer to Section II Award Information), the applicant must identify and describe specific subtasks, responsible entities, expected completion dates, RMA substantial involvement, and deliverables that will further the purpose of this program. Applicants will obtain a higher score to the extent that the Statement of Work is specific, measurable, reasonable, has specific deadlines for the completion of subtasks, relates directly to the required activities and the program purpose described in this announcement, and is sensitive to the needs of producers that are small, have limited resources, are minorities, or are beginning in a farming or ranching business. Applicants are required to submit this Statement of Work on Form RME–2.

Partnering—Maximum 15 Points

The applicant must demonstrate experience and capacity to partner with and gain the support of grower organizations, agribusiness professionals, and agricultural leaders to carry out a local program of education and information in a designated Targeted State. Applicants will receive higher scores to the extent that they can document and demonstrate: (a) That partnership commitments are in place for the express purpose of delivering the program in this announcement; (b) that a broad group of farmers and ranchers will be reached within the Targeted State; and (c) that a substantial effort has been made to partner with organizations that can meet the needs of producers that are small, have limited resources, are minorities, or are beginning farmers and ranchers.

Project Management—Maximum 15 Points

The applicant must demonstrate an ability to implement sound and effective project management practices. Higher scores will be awarded to applicants that can demonstrate organizational skills, leadership, and experience in delivering services or programs that assist agricultural producers in the respective Targeted State. If the applicant has been a recipient of other Federal or other government grants, cooperative agreements, or contracts, the applicant must also detail that they

have consistently complied with financial and program reporting and auditing requirements. Applicants that will employ, or have access to, personnel who have experience in directing local educational programs that benefit agricultural producers will receive higher rankings.

*2. Review and Selection Process*

Applications will be evaluated using a two-part process. First, each application will be screened by RMA personnel to ensure that it meets the requirements in this announcement. Applications that do not meet the requirements of this announcement or are incomplete will not receive further consideration. Applications that meet announcement requirements will be sorted into the Targeted State in which the applicant proposes to conduct the project and will be presented to a review panel for consideration. Second, the review panel will meet to consider and discuss the merits of each application.

The panel will consist of not less than three independent reviewers. Reviewers will be drawn from USDA, other Federal agencies, and others representing public and private organizations, as needed. After considering the merits of all applications within a Targeted State, panel members will score each application according to the criteria and point values listed above. The panel will then rank each application against others within the Targeted State according to the scores received. A lottery will be used to resolve any instances of a tie score that might have a bearing on funding recommendations. If such a lottery is required, the names of all tied applicants will be entered into a drawing. The first tied applicant drawn will have priority over other tied applicants for funding consideration.

The review panel will report the results of the evaluation to the Manager of FCIC. The panel's report will include the recommended applicants to receive cooperative agreements for each Targeted State. Funding will not be provided for an application receiving a score less than 50.

An organization, or group of organizations in partnership, may apply for funding under other FCIC or RMA programs, in addition to the program described in this announcement. However, if the Manager of FCIC determines that an application recommended for funding is sufficiently similar to a project that has been funded or has been recommended to be funded under another RMA or FCIC program, then the Manager may elect to not fund that application in whole or in part. The Manager of FCIC will make the final determination on those applications that will be awarded funding.

## VI. Award Administration Information

*1. Award Notices*

Following approval by the awarding official of RMA of the applications to be selected for funding, project leaders whose applications have been selected for funding will be notified. Within the limit of funds available for such a purpose, the awarding official of RMA shall enter into cooperative agreements with those applicants. The agreements provide the amount of Federal funds for use in the project period, the terms and conditions of the award, and the time period for the project. The effective date of the agreement shall be on the date the agreement is executed by both parties and it shall remain in effect for up to one year or through September 30, 2006, whichever is later.

After a cooperative agreement has been signed, RMA will extend to award recipients, in writing, the authority to draw down funds for the purpose of conducting the activities listed in the agreement. All funds provided to the applicant by FCIC must be expended solely for the purpose for which the funds are obligated in accordance with the approved agreement and budget, the regulations, the terms and conditions of the award, and the applicability of Federal cost principles. No commitment of Federal assistance beyond the project period is made or implied for any award resulting from this notice.

Notification of denial of funding will be sent to applicants after final funding decisions have been made. Reasons for denial of funding can include, but are not limited to, incomplete applications, applications with evaluation scores below 50, or applications with evaluation scores that are lower than those of other applications in a Targeted State.

*2. Administrative and National Policy Requirements*

Requirement To Use Program Logo

Applicants awarded cooperative agreements will be required to use a program logo and design provided by RMA for all instructional and promotional materials.

Requirement To Provide Project Information to an RMA-Selected Contractor

Applicants awarded cooperative agreements will be required to assist RMA in evaluating the effectiveness of its educational programs by providing documentation of educational activities and related information to any contractor selected by RMA for program evaluation purposes.

Private Crop Insurance Organizations and Potential Conflicts of Interest

Private organizations that are involved in the sale of Federal crop insurance, or that have financial ties to such organizations, are eligible to apply for funding under this announcement. However, such entities will not be allowed to receive funding to conduct activities that would otherwise be required under a Standard Reinsurance Agreement or any other agreement in effect between FCIC and the entity. Also, such entities will not be allowed to receive funding to conduct activities that could be perceived by producers as promoting one company's services or products over another's. If applying for funding, such organizations are encouraged to be sensitive to potential conflicts of interest and to describe in their application the specific actions they will take to avoid actual and perceived conflicts of interest.

Access to Panel Review Information

Upon written request from the applicant, scores from the evaluation panel, not including the identity of reviewers, will be sent to the applicant after the review and awards process has been completed.

Confidential Aspects of Proposals and Awards

The names of applicants, the names of individuals identified in the applications, the content of applications, and the panel evaluations of applications will all be kept confidential, except to those involved in the review process, to the extent permitted by law. In addition, the identities of review panel members will remain confidential throughout the entire review process and will not be released to applicants. At the end of the fiscal year, names of panel members will be made available. However, panelists will not be identified with the review of any particular application.

When an application results in a cooperative agreement, that agreement becomes a part of the official record of RMA transactions, available to the public upon specific request. Information that the Secretary of Agriculture determines to be of a confidential, privileged, or proprietary nature will be held in confidence to the extent permitted by law. Therefore, any information that the applicant wishes to be considered confidential, privileged, or proprietary should be clearly marked within an application, including the

basis for such designation. The original copy of a proposal that does not result in an award will be retained by RMA for a period of one year. Other copies will be destroyed. Copies of proposals not receiving awards will be released only with the express written consent of the applicant or to the extent required by law. A proposal may be withdrawn at any time prior to award.

Audit Requirements

Applicants awarded cooperative agreements are subject to audit.

Prohibitions and Requirements With Regard to Lobbying

Section 1352 of Public Law 101–121, enacted on October 23, 1989, imposes prohibitions and requirements for disclosure and certification related to lobbying on recipients of Federal contracts, grants, cooperative agreements, and loans. It provides exemptions for Indian Tribes and tribal organizations. Current and prospective recipients, and any subcontractors, are prohibited from using Federal funds, other than profits from a Federal contract, for lobbying Congress or any Federal agency in connection with the award of a contract, grant, cooperative agreement, or loan. In addition, for each award action in excess of $100,000 ($150,000 for loans) the law requires recipients and any subcontractors: (1) To certify that they have neither used nor will use any appropriated funds for payment of lobbyists; (2) to disclose the name, address, payment details, and purpose of any agreements with lobbyists whom recipients of their subcontractors will pay with profits or other nonappropriated funds on or after December 22, 1989; and (3) to file quarterly up-dates about the use of lobbyists if material changes occur in their use. The law establishes civil penalties for non-compliance. A copy of the certification and disclosure forms must be submitted with the application and are available at the address and telephone number listed in Section VII. Agency Contact.

Applicable OMB Circulars

All cooperative agreements funded as a result of this notice will be subject to the requirements contained in all applicable OMB circulars.

Requirement To Participate in Civil Rights Training

Project leaders of all cooperative agreements funded as a result of this notice are required to know and abide by Federal civil rights laws. Agency policies or regulations may require that project leaders attend civil rights training to become fully aware of civil rights responsibilities. In their applications, applicants should budget for possible travel costs associated with receiving this training.

*3. Reporting*

Applicants awarded cooperative agreements will be required to submit quarterly progress and financial reports (OMB Standard Form 269) throughout the project period, as well as a final program and financial report not later than 90 days after the end of the project period.

## VII. Agency Contact

**FOR FURTHER INFORMATION CONTACT:** Applicants and other interested parties are encouraged to contact: Michelle Fuller, USDA–RMA–RME, 1400 Independence Ave. SW., Stop 0808, Washington, DC 20250–0808, phone: 202–720–6356, fax: 202–690–3605, e-mail: *RMA.Risk-Ed@rma.usda.gov.* You may also obtain information regarding this announcement from the RMA Web site at: *http://www.rma.usda.gov.*

## VIII. Other Information

*Related Programs*

Funding availability for this program may be announced at approximately the same time as funding availability for similar but separate programs—CFDA No. 10.455 (Community Outreach and Assistance Partnerships), CFDA No. 10.456 (Risk Management Research Partnerships), CFDA No. 10.457 (Commodity Partnerships for Risk Management Education), and CFDA No. 10.459 (Commodity Partnerships Small Sessions program). These programs have some similarities, but also key differences. The differences stem from important features of each program's authorizing legislation and different RMA objectives. Prospective applicants should carefully examine and compare the notices for each program.

Signed in Washington, DC, on March 23, 2005.

**Ross J. Davidson, Jr.,**

*Manager, Federal Crop Insurance Corporation.*

[FR Doc. 05–6078 Filed 3–28–05; 8:45 am]

BILLING CODE 3410–08–P

---

## DEPARTMENT OF AGRICULTURE

### Natural Resources Conservation Service

### Lower Payette River Ditch Diversion, Replacement; Payette County, ID

**AGENCY:** Natural Resources Conservation Service, USDA.

**ACTION:** Notice of a finding of no significant impact.

**SUMMARY:** Pursuant to Section 102(2)(C) of the National Environmental Policy Act of 1969; the Council on Environmental Quality Guidelines (40 CFR part 1500); and the Natural Resources Conservation Service Guidelines (7 CFR part 650); the Natural Resources Conservation Service, U.S. Department of Agriculture, gives notice that an environmental impact statement is not being prepared for a federally assisted proposed project by the Lower Payette Ditch Company, Payette County, Idaho.

**FOR FURTHER INFORMATION CONTACT:** Richard Sims, State Conservationist, Natural Resources Conservation Service, 9173 W. Barnes Dr., Suite C, Boise, Idaho, 83709–1574, telephone: 208–378–5700.

**SUPPLEMENTARY INFORMATION:** The Plan/Environmental Assessment of this federally assisted proposed action indicates that the proposed action will not cause significant local, regional, or national impacts on the environment. As a result of these findings, Richard Sims, State Conservationist, has determined that the preparation and review of an environmental impact statement is not needed for this project.

The objective of the Lower Payette Ditch Company proposed action is to provide efficient water delivery, operator safety and low maintenance, reliability, and adequate fish and recreational boater passage, while not adversely affecting the environment. The proposed project would replace the existing deteriorating diversion structure with an automated inflatable diversion dam.

The Notice of Finding of No Significant Impact (FONSI) has been forwarded to the Environmental Protection Agency. The basic data developed during the plan/environmental assessment is on file and may be reviewed by contacting Mr. Richard Sims. The FONSI has been sent to various Federal, State, and local agencies and interested parties. A limited number of copies of the FONSI are available to fill single copy requests at the address stated on the previous page.

No administrative action on the proposal will be initiated until 30 days after the date of publication in the **Federal Register**.

Dated: March 18, 2005.

**Richard Sims,**

*State Conservationist.*

[FR Doc. 05–6096 Filed 3–28–05; 8:45 am]

BILLING CODE 3410–16–P

## DEPARTMENT OF AGRICULTURE

### Rural Utilities Service

### Information Collection Activity; Comment Request

**AGENCY:** Rural Utilities Service, USDA.

**ACTION:** Notice and request for comments.

**SUMMARY:** In accordance with the Paperwork Reduction Act of 1995 (44 U.S.C. chapter 35, as amended), the Rural Utilities Service (RUS) invites comments on this information collection for which RUS intends to request approval from the Office of Management and Budget (OMB).

**DATES:** Comments on this notice must be received by May 31, 2005.

**FOR FURTHER INFORMATION CONTACT:** Richard C. Annan, Director, Program Development and Regulatory Analysis, Rural Utilities Service, 1400 Independence Ave., SW., STOP 1522, Room 5168 South Building, Washington, DC 20250–1522. Telephone: (202) 720–0784. Fax: (202) 720–4120.

**SUPPLEMENTARY INFORMATION:** The Office of Management and Budget's (OMB) regulation (5 CFR part 1320) implementing provisions of the Paperwork Reduction Act of 1995 (Pub. L. 104–13) requires that interested members of the public and affected agencies have an opportunity to comment on information collection and recordkeeping activities (see 5 CFR 1320.8(d)). This notice identifies an information collection that RUS is submitting to OMB as a revision to an existing collection. Comments are invited on: (a) Whether the proposed collection of information is necessary for the proper performance of the functions of the Agency, including whether the information will have practical utility; (b) the accuracy of the Agency's estimate of the burden of the proposed collection of information including the validity of the methodology and assumptions used; (c) ways to enhance the quality, utility and clarity of the information to be collected; and (d) ways to minimize the burden of the collection of information on those who are to respond, including through the use of appropriate automated, electronic, mechanical, or other technological collection techniques or other forms of information technology. Comments may be sent to: Richard C. Annan, Director, Program Development and Regulatory Analysis, Rural Utilities Service, U.S. Department of Agriculture, STOP 1522, Room 5168, 1400 Independence Ave., SW., Washington, DC 20250–1522. Fax: (202) 720–4120.

*Title:* Accounting Requirements for Electric and Telecommunications Borrowers.

*OMB Control Number:* 0572–0003.

*Type of Request:* Extension of a currently approved collection.

*Abstract:* The Agency believes that this is the minimum record retention requirements needed to carry out its due diligence responsibilities in loan underwriting and maintaining loan security. RUS borrowers should understand that they may be subject to additional record retention requirements imposed by other regulatory authorities such as FERC, FCC, State commissions and IRS.

*Estimate of Burden:* Public reporting burden for this collection of information is estimated to average 2 hours per response.

*Respondents:* Business or other for-profit, Not-for-profit institutions.

*Estimated Number of Respondents and Recordkeepers:* 1,660.

*Estimated Number of Responses per Respondent:* 1.

*Estimated Number of Hours per Recordkeeper:* 36 hours.

*Estimated Total Annual Burden on Respondents:* 3,320 hours.

*Estimated Total Annual Burden on Recordkeepers:* 29,653 hours.

Copies of this information collection can be obtained from MaryPat Daskal, Program Development and Regulatory Analysis, at (202) 720–7853, Fax: (202) 720–4120.

All responses to this notice will be summarized and included in the request for OMB approval. All comments will also become a matter of public record.

Dated: March 23, 2005.

**Curtis M. Anderson,**

*Acting Administrator, Rural Utilities Service.*

[FR Doc. 05–6136 Filed 3–28–05; 8:45 am]

BILLING CODE 3410–15–P

## DEPARTMENT OF AGRICULTURE

### Rural Utilities Service

### Information Collection Activity; Comment Request

**AGENCY:** Rural Utilities Service, USDA.

**ACTION:** Notice and request for comments.

**SUMMARY:** In accordance with the Paperwork Reduction Act of 1995 (44 U.S.C. Chapter 35, as amended), the Rural Utilities Service's (RUS) invites comments on this information collection for which RUS intends to request approval from the Office of Management and Budget (OMB).

**DATES:** Comments on this notice must be received by May 31, 2005.

**FOR FURTHER INFORMATION CONTACT:** Richard Annan, Acting Director, Program Development & Regulatory Analysis, Rural Utilities Service, USDA, 1400 Independence Ave., SW., STOP 1522, Room 5168 South Building, Washington, DC 20250–1522. Telephone: (202) 720–0784. Fax: (202) 720–4120.

**SUPPLEMENTARY INFORMATION:** The Office of Management and Budget's (OMB) regulation (5 CFR 1320) implanting provisions of the Paperwork Reduction Act of 1995 (Pub. L. 104–13) requires that interested members of the public and affected agencies have an opportunity to comment on information collection and recordkeeping activities (see 5 CFR 1320.8(d)). This notice identifies an information collection that RUS is submitting to OMB for extension.

Comments are invited on (a) whether the collection of information is necessary for the proper performance of the functions of the agency, including whether the information will have practical utility; (b) the accuracy of the agency's estimate of burden including the validity of the methodology and assumption used; (c) ways to enhance the quality, utility and clarity of the information to be collected; and (d) ways to minimize the burden of the collection of information on those who are to respond, including through the use of appropriate automated, electronic, mechanical, or other technological collection techniques on other forms of information technology. Comments may be sent to: Dawn Wolfgang, Program Development and Regulatory Analysis, Rural Utilities Service, U.S. Department of Agriculture, 1400 Independence Ave., SW., Room 5166–South, STOP 1522, Washington, DC 20250–1522. Fax: (202) 720–4120. E-mail: *dawn.wolfgang@usda.gov.*

*Title:* 7 CFR 1726, Electric System Construction Policies and Procedures.

*OMB Control Number:* 0572–0107.

*Type of Request:* Extension of a previously approved collection.

*Abstract:* In order to facilitate the programmatic interest of the Rural Electrification Act of 1936, 7 U.S.C. 901 *et seq.* (RE Act), and, in order to assure that loans made or guaranteed by RUS are adequately secured, RUS, as a secured lender, has established certain standards and specifications for materials, equipment, and construction of electric systems. The use of standard forms, construction contracts, and procurement procedures helps assure RUS that appropriate standards and

specification are maintained; RUS' loan security is not adversely affected; and the loan and loan guarantee funds are used effectively and for the intended purposes.

*Estimate of Burden:* Public reporting burden for this collection of information is estimated to average 1.5 minutes per response.

*Respondents:* Businesses or other for profits; Not-for-profit institutions.

*Estimated Number of Respondents:* 697.

*Estimated Number of Responses per Respondent:* 5.

*Estimated Total Annual Burden on Respondents:* 71 hours.

Copies of this information collection, and related form and instructions, can be obtained from Dawn Wolfgang, Program Development and Regulatory Analysis, at (202) 720–0812.

All responses to this notice will be summarized and included in the request for OMB approval. All comments will also become a matter of public record.

Dated: March 22, 2005.

**Curtis M. Anderson,**

*Acting Administrator, Rural Utilities Service.*

[FR Doc. 05–6137 Filed 3–28–05; 8:45 am]

BILLING CODE 3410–15–P

## DEPARTMENT OF COMMERCE

### Foreign-Trade Zones Board

**[Order No. 1382]**

### Expansion of Foreign-Trade Zone 25; Broward County, FL

Pursuant to its authority under the Foreign-Trade Zones Act of June 18, 1934, as amended (19 U.S.C. 81a–81u), the Foreign-Trade Zones Board (the Board) adopts the following Order:

*Whereas,* the Port Everglades Department of Broward County, Florida, grantee of Foreign-Trade Zone 25, submitted an application to the Board for authority to expand and reorganize FTZ 25 in Broward County, within the Port Everglades Customs and Border Protection port of entry (FTZ Docket 33–2004, filed 8/9/2004);

*Whereas,* notice inviting public comment has been given in the **Federal Register** (69 FR 51060, 8/17/2004);

*Whereas,* the Board adopts the findings and recommendations of the examiner's report, and finds that the requirements of the FTZ Act and Board's regulations are satisfied, and that approval of the application is in the public interest;

*Now, therefore,* the Board hereby orders:

The application to expand FTZ 25 is approved, subject to the FTZ Act and the Board's regulations, including § 400.28.

Signed at Washington, DC, this 18th day of March 2005.

**Joseph A. Spetrini,**

*Acting Assistant Secretary of Commerce for Import Administration, Alternate Chairman, Foreign-Trade Zones Board.*

*Attest:*
Dennis Puccinelli,
Executive Secretary.

[FR Doc. 05–6168 Filed 3–28–05; 8:45 am]

BILLING CODE 3510–DS–P

## DEPARTMENT OF COMMERCE

### International Trade Administration

**A–570–863**

### Honey from the People's Republic of China: Notice of Partial Rescission of Antidumping Duty Administrative Review

**AGENCY:** Import Administration, International Trade Administration, Department of Commerce

**SUMMARY:** On January 31, 2005, the Department of Commerce (''the Department'') published in the **Federal Register** (70 FR 4818) a notice announcing the initiation of the administrative review of the antidumping duty order on honey from the People's Republic of China (''PRC''). The period of review (''POR'') is December 1, 2003, to November 30, 2004. This review is now being rescinded for Kunshan Foreign Trading Company, High Hope International Group Jiangsu Foodstuffs Import & Export Corp., Henan Native Produce Import & Export Corporation, Shanghai Xiuwei International Trading Co., Ltd., Shanghai Shinomiel International Trade Corporation, Foodworld International Club, Ltd., and Inner Mongolia Youth Trade Development Co., Ltd., because the only requesting party withdrew its request in a timely manner.

**EFFECTIVE DATE:** March 29, 2005.

**FOR FURTHER INFORMATION CONTACT:** Catherine Bertrand or Anya Naschak, AD/CVD Operations, Office 9, Import Administration, U.S. Department of Commerce, 14th Street and Constitution Avenue, NW., Room 4003, Washington, DC 20230; telephone (202) 482–3207 or (202) 482–6375, respectively.

**SUPPLEMENTARY INFORMATION:**

#### Background

On December 10, 2001, the Department published in the **Federal Register** an antidumping duty order covering honey from the PRC. *See Notice of Amended Final Determination of Sales at Less Than Fair Value and Antidumping Duty Order; Honey from the People's Republic of China*, 66 FR 63670 (December 10, 2001). On December 1, 2004, the Department published a *Notice of Opportunity to Request an Administrative Review of Antidumping or Countervailing Duty Order, Finding, or Suspended Investigation*, 69 FR 69889. On December 30, 2004, the American Honey Producers Association and the Sioux Honey Association (collectively, petitioners), requested, in accordance with section 351.213(b) of the Department's regulations, an administrative review of the antidumping duty order on honey from the PRC for nineteen companies covering the period December 1, 2003, through November 30, 2004. On December 30, 2004, and January 3, 2005, nine Chinese companies requested an administrative review of their respective companies. The Department notes that petitioners' request covered these nine companies as well.

On January 31, 2005, the Department initiated an administrative review of nineteen Chinese companies. *See Initiation of Antidumping and Countervailing Duty Administrative Reviews and Request for Revocation in Part*, 70 FR 4818 (January 31, 2005). On February 22, 2005, petitioners filed a letter withdrawing their request for review of the following seven companies: Kunshan Foreign Trading Company, High Hope International Group Jiangsu Foodstuffs Import & Export Corp., Henan Native Produce Import & Export Corporation, Shanghai Xiuwei International Trading Co., Ltd., Shanghai Shinomiel International Trade Corporation, Foodworld International Club, Ltd., and Inner Mongolia Youth Trade Development Co., Ltd. Only petitioners had requested a review of these companies.

#### Rescission of Review

The applicable regulation, 19 CFR 351.213(d)(1), states that if a party that requested an administrative review withdraws the request within 90 days of the publication of the notice of initiation of the requested review, the Secretary will rescind the review. Petitioners withdrew their review request with respect to seven exporters of subject merchandise within the 90–day deadline, in accordance with 19 CFR 351.213(d)(1). Since petitioners were the only party to request an administrative review of these companies, we are partially rescinding this review of the antidumping duty order on honey from the PRC covering the period December 1, 2003, through

November 30, 2004, with respect to Kunshan Foreign Trading Company, High Hope International Group Jiangsu Foodstuffs Import & Export Corp., Henan Native Produce Import & Export Corporation, Shanghai Xiuwei International Trading Co., Ltd., Shanghai Shinomiel International Trade Corporation, Foodworld International Club, Ltd., and Inner Mongolia Youth Trade Development Co., Ltd.

**Assessment**

The Department will instruct U.S. Customs and Border Protection (''CBP'') to assess antidumping duties on all appropriate entries. For those companies for which this review is rescinded, antidumping duties shall be assessed at rates equal to the cash deposit of estimated antidumping duties required at the time of entry, or withdrawal from warehouse, for consumption, in accordance with 19 CFR 351.212(c)(1)(i). The Department will issue appropriate assessment instructions directly to CBP within 15 days of publication of this notice.

**Notification of Interested Parties**

This notice serves as a final reminder to importers of their responsibility under 19 CFR 351.402(f)(2) to file a certificate regarding the reimbursement of antidumping duties prior to liquidation of the relevant entries during this review period. Failure to comply with this requirement could result in the Secretary's presumption that reimbursement of the antidumping duties occurred and the subsequent assessment of double antidumping duties.

This notice also serves as a reminder to parties subject to administrative protective orders (''APOs'') of their responsibility concerning the return or destruction of proprietary information disclosed under APO in accordance with 19 CFR 351.305, which continues to govern business proprietary information in this segment of the proceeding. Timely written notification of the return/destruction of APO materials or conversion to judicial protective order is hereby requested. Failure to comply with the regulations and terms of an APO is a violation which is subject to sanction.

This notice is issued and published in accordance with sections 751 and 777(i) of the Act and 19 CFR 351.213(d)(4).

Dated: March 22, 2005.

**Barbara E. Tillman,**

*Acting Deputy Assistant Secretary for Import Administration.*

[FR Doc. E5–1387 Filed 3–28–05; 8:45 am]

BILLING CODE 3510–DS–S

## DEPARTMENT OF COMMERCE

### International Trade Administration

**[A–821–819]**

### Magnesium Metal From the Russian Federation: Notice of Amended Final Determination of Sales at Less Than Fair Value

**AGENCY:** Import Administration, International Trade Administration, Department of Commerce.

**EFFECTIVE DATE:** March 29, 2005.

**FOR FURTHER INFORMATION CONTACT:** Mark Hoadley or Kimberely Hunt, AD/CVD Operations, Office 6, Import Administration, International Trade Administration, U.S. Department of Commerce, 14th Street and Constitution Avenue, NW., Washington, DC 20230; telephone: (202) 482–4733 or (202) 482–1272.

**Amendment to Final Determination**

In accordance with sections 735(d) and 777(i)(1) of the Tariff Act of 1930, as amended, (the Act), on February 24, 2005, the Department of Commerce (the Department) published its notice of final determination of sales at less-than-fair value (LTFV) in the investigation of magnesium metal from the Russian Federation. *See Magnesium Metal from the Russian Federation: Notice of Final Determination of Sales at Less Than Fair Value*, 70 FR 9041 (February 24, 2005) and accompanying Issues and Decision Memorandum, dated February 16, 2005. On March 1, 2005, JSC AVISMA Titanium-Magnesium Works (Avisma) and U.S. Magnesium Corporation, LLC, United Steelworkers of America, Local 8319, and Glass, Molders, Pottery, Plastics and Allied Workers International, Local 374 (collectively, petitioners) filed timely allegations stating that the Department made ministerial errors in the final determination. On March 7, 2005, petitioners and Alcoa, Inc. and Northwest Alloys, Inc. (collectively, Alcoa) filed comments on Avisma's allegations, and Avisma filed comments on petitioners' allegations.

After analyzing parties' comments, we have determined, in accordance with 19 CFR 351.224(e), that we made the following ministerial errors in our calculations performed for the final determination: (1) We used incorrect values for Avisma's international freight and U.S. brokerage and handling expenses; and (2) we incorrectly applied U.S. duties to certain U.S. sales by Avisma.

For a detailed discussion of the ministerial errors listed above, as well as the Department's analysis, *see* Memorandum from Mark Hoadley, Senior Analyst, AD/CVD Operations, Office 6, to Maria MacKay, Program Manager, AD/CVD Operations, Office 6, concerning Magnesium Metal from the Russian Federation: Analysis of Ministerial Error Allegations for JSC AVISMA Titanium—Magnesium Works (Avisma), dated March 21, 2005, on file in the Central Records Unit, Room B–099 of the main Commerce Building.

Therefore, in accordance with 19 CFR 351.224(e), we are amending the final determination of sales at LTFV in the antidumping duty investigation of magnesium metal from the Russian Federation. The revised dumping margins for the period January 1, 2003, through December 31, 2003 are as follows:

| Manufacturer/exporter | Weighted-average margin (percent) |
|---|---|
| JSC AVISMA Titanium-Magnesium Works | 21.71 |
| Solikamsk Magnesium Works | 18.65 |
| All Others | 21.01 |

**Continuation of Suspension of Liquidation**

Pursuant to section 735(c)(1)(B) of the Act, we will instruct U.S. Customs and Border Protection (CBP) to continue to suspend liquidation of all entries of magnesium from the Russian Federation that are entered, or withdrawn from warehouse, for consumption on or after October 4, 2004, the date of publication of the preliminary determination in the **Federal Register**. We will instruct CBP to require, for each entry, a cash deposit or the posting of a bond equal to the weighted-average dumping margins indicated above. These instructions suspending liquidation will remain in effect until further notice.

This determination is issued and published pursuant to sections 753(d) and 777(i) of the Act.

Dated: March 24, 2005.

**Joseph A. Spetrini,**

*Acting Assistant Secretary for Import Administration.*

[FR Doc. 05–6185 Filed 3–28–05; 8:45 am]

BILLING CODE 3510–DS–M

## DEPARTMENT OF COMMERCE

### International Trade Administration

**A–570–896**

### Notice of Amended Final Determination of Sales at Less Than Fair Value: Magnesium Metal from the People's Republic of China

**AGENCY:** Import Administration, International Trade Administration, Department of Commerce

**EFFECTIVE DATE:** March 29, 2005.

**FOR FURTHER INFORMATION CONTACT:** Lilit Astvatsatrian, Import Administration, International Trade Administration, U.S. Department of Commerce, 14th Street and Constitution Avenue NW., Washington, DC 20230; telephone: (202) 482–6412.

**SUPPLEMENTARY INFORMATION:**

### Amendment to Final Determination

In accordance with sections 735(d) and 777(i)(1) of the Tariff Act of 1930, as amended, (''the Act''), on February 24, 2005, the Department of Commerce (''the Department'') published its notice of final determination of sales at less than fair value (''LTFV'') in the investigation of magnesium metal from the People's Republic of China (''PRC''). *See Notice of Final Determination of Sales at Less Than Fair Value: Magnesium Metal from the People's Republic of China*, 70 FR 9037 (February 24, 2005) (''*Final Determination*''), and corresponding memorandum to Joseph A. Spetrini, Acting Assistant Secretary for Import Administration from Barbara E. Tillman, Acting Deputy Assistant Secretary for Import Administration, *Issues and Decision Memorandum for the Less–Than-Fair–Value Investigation of Magnesium Metal from the People's Republic of China*, dated February 16, 2005, (''*Issues and Decision Memorandum*''). On February 28, 2005, Tianjin Magnesium International Co., Ltd. (''Tianjin''), filed timely allegations stating that the Department made ministerial errors in its final determination. On March 7, 2005, Petitioners[1] filed comments rebutting Tianjin's ministerial error allegations.

After analyzing Tianjin' s comments and Petitioners' rebuttal comments, we have determined that our calculations in the *Final Determination* for Tianjin included ministerial errors as defined in section 735(e) of the Act and 19 CFR 351.224(f). Therefore, in accordance with section 735(e) of the Act, we are amending the final determination of sales at LTFV in the antidumping duty investigation of magnesium metal from the PRC for Tianjin. In addition, we based the margin in the *Final Determination* for Beijing Guangling Jinghua Science & Technology Co., Ltd. (''Guangling'') on the weighted–average margin for the mandatory respondents covered by this investigation, excluding any rates that are zero, *de minimis*, or based entirely on adverse facts available. Because that rate has changed as a result of the correction of ministerial errors since the final determination, we have revised Guangling's rate accordingly. The revised weighted–average dumping margins are listed in the Amended Final Determination section, below.

### Period of Investigation

The period of investigation (''POI'') is July 1, 2003, through December 31, 2003.

### Scope of Investigation

The products covered by this investigation are primary and secondary alloy magnesium metal regardless of chemistry, raw material source, form, shape, or size. Magnesium is a metal or alloy containing by weight primarily the element magnesium. Primary magnesium is produced by decomposing raw materials into magnesium metal. Secondary magnesium is produced by recycling magnesium–based scrap into magnesium metal. The magnesium covered by this investigation includes blends of primary and secondary magnesium.

The subject merchandise includes the following alloy magnesium metal products made from primary and/or secondary magnesium including, without limitation, magnesium cast into ingots, slabs, rounds, billets, and other shapes, magnesium ground, chipped, crushed, or machined into raspings, granules, turnings, chips, powder, briquettes, and other shapes: products that contain 50 percent or greater, but less than 99.8 percent, magnesium, by weight, and that have been entered into the United States as conforming to an ''ASTM Specification for Magnesium Alloy''[2] and thus are outside the scope of the existing antidumping orders on magnesium from the PRC (generally referred to as ''alloy'' magnesium).

The scope of this investigation excludes the following merchandise: (1) all forms of pure magnesium, including chemical combinations of magnesium and other material(s) in which the pure magnesium content is 50 percent or greater, but less than 99.8 percent, by weight, that do not conform to an ''ASTM Specification for Magnesium Alloy'';[3] (2) magnesium that is in liquid or molten form; and (3) mixtures containing 90 percent or less magnesium in granular or powder form, by weight, and one or more of certain non–magnesium granular materials to make magnesium–based reagent mixtures, including lime, calcium metal, calcium silicon, calcium carbide, calcium carbonate, carbon, slag coagulants, fluorspar, nephaline syenite, feldspar, alumina (Al203), calcium aluminate, soda ash, hydrocarbons, graphite, coke, silicon, rare earth metals/mischmetal, cryolite, silica/fly ash, magnesium oxide, periclase, ferroalloys, dolomite lime, and colemanite.[4]

The merchandise subject to this investigation is currently classifiable under items 8104.19.00 and 8104.30.00 of the Harmonized Tariff Schedule of the United States (''HTSUS''). Although the HTSUS items are provided for convenience and customs purposes, the written description of the merchandise under investigation is dispositive.

### Allegation 1: Surrogate Value for Pure Magnesium

Tianjin contends that in the final determination the Department intended to rely on a time period that is contemporaneous with the POI for the valuation of pure magnesium, but rather used a value reflecting a different time period. Tianjin claims that, in the preliminary determination, the Department used the correct value of

[1] U.S. Magnesium Corporation LLC, United Steelworkers of America, Local 8319, and Glass, Molders, Pottery, Plastics & Allied Workers International, Local 374.

[2] The meaning of this term is the same as that used by the American Society for Testing and Materials in its *Annual Book of ASTM Standards: Volume 01.02 Aluminum and Magnesium Alloys.*

[3] This material is already covered by existing antidumping orders. *See Antidumping Duty Orders: Pure Magnesium from the People's Republic of China, the Russian Federation and Ukraine; Amended Final Determination of Sales at Less Than Fair Value: Antidumping Duty Investigation of Pure Magnesium from the Russian Federation*, 60 FR 25691 (May 12, 1995), and *Antidumping Duty Order: Pure Magnesium in Granular Form from the People's Republic of China*, 66 FR 57936 (November 19, 2001).

[4] This third exclusion for magnesium-based reagent mixtures is based on the exclusion for reagent mixtures in the 2000-2001 investigations of magnesium from the PRC, Israel, and Russia. *See Final Determination of Sales at Less Than Fair Value: Pure Magnesium in Granular Form From the People's Republic of China*, 66 FR 49345 (September 27, 2001); *Final Determination of Sales at Less Than Fair Value: Pure Magnesium From Israel*, 66 FR 49349 (September 27, 2001); *Final Determination of Sales at Not Less Than Fair Value: Pure Magnesium From the Russian Federation*, 66 FR 49347 (September 27, 2001). These mixtures are not magnesium alloys because they are not chemically combined in liquid form and cast into the same ingot.

$1,340 for RSM[5] but in the final determination used a value of $1,800+ for Tianjin.

Petitioners argue that section 735(e) of the Act and 19 CFR 351.224(f) define ministerial errors as ''errors in addition, subtraction, or other arithmetic functions, clerical errors resulting from inaccurate copying, duplication, or the like, and any other type of unintentional error which the administering authority considers ministerial.'' Thus, Petitioners contend that the Act and regulations explicitly provide that to be classified as a ''ministerial error,'' the Department's action must involve arithmetic or keypunch errors or other types of unintentional errors. Petitioners, citing *Amended Final Results of Antidumping Duty Administrative Reviews: Certain Cold–Rolled and Corrosion–Resistant Carbon Steel Flat Products from Korea*, 66 FR 14883 (March 14, 2001), *Final Affirmative Countervailing Duty Determination: Certain Cut- to–Length Carbon–Quality Steel Plate From Italy*, 64 FR 73244, (December 29, 1999), and *Final Determination of Sales at Less Than Fair Value; Solid Fertilizer Grade Ammonium Nitrate From the Russian Federation*, 65 FR 42669 (July 11, 2000), argue that the Department has stated that if it intended to perform a calculation in a certain manner, it has made a methodological or policy choice, which by definition cannot be a ministerial error. Petitioners further contend that the Department cannot correct non–ministerial errors in the ministerial–error process.

Petitioners argue that the errors identified by Tianjin during the ministerial–error process do not involve arithmetic errors and are not the result of inaccurate copying or duplication. Further, Petitioners contend that the record shows that the Department intentionally chose to perform the calculations in the final determination in the manner that Tianjin now asserts constitutes a ministerial error. Therefore, Petitioners argue that the Department should reject Tianjin's allegations of ministerial error with respect to the valuation of pure magnesium.

Petitioners claim that a review of Comment 7 of the *Issues and Decision Memorandum*, and Attachment VI of the Memorandum to the File from Laurel LaCivita, Lilit Astvatsatrian and Steven Winkates, Case Analysts, through Robert Bolling, Program Manager, and Laurie Parkhill, Office Director: *Magnesium Metal from the People's Republic of China: Factors Valuation Memorandum for the Preliminary Determination*, dated September 24, 2004 (''*Factor–Valuation Memorandum*''), shows that the Department intended to use the pure magnesium price of $1,883 per metric ton. Petitioners further maintain that the Department further confirmed its intention to use the $1,883 per metric ton value by rejecting Petitioners' request to broaden the valuation period for pure magnesium. Petitioners assert that the Department used the $1,883 value in the calculations for the preliminary determination for Tianjin, then stated specifically in the surrogate–value memorandum for the final determination that it intended no changes to surrogate values for raw materials in the final determination. Thus, Petitioners argue, because the Department used the value that it intended to use in the final determination, there was no ministerial error with respect to pure magnesium.

**Department's Position:** In the preliminary determination, we explained that ''we valued direct materials, energy, and packing materials using publicly available import prices reported in the *Monthly Statistics of the Foreign Trade of India* for the POI.'' *See* memorandum to the file from Laurel LaCivita, Case Analyst, Lilit Astvatsatrian, Case Analyst, Steven Winkates, Case Analyst, through Robert Bolling, Program Manager, and Laurie Parkhill, Office Director, *Magnesium Metal from the People's Republic of China: Factor Valuation Memorandum for the Preliminary Determination*, dated September 24, 2004 (''*Preliminary Factor–Valuation Memorandum*''), at 3. The value the Department cited in its preliminary factor–valuation memorandum was $1,337.86 per metric ton. *See Preliminary Factor–Valuation Memorandum* at Attachment IV. However, in calculating Tianjin's margin in the preliminary determination, we inadvertently used the value of $1,882.94 per metric ton as the surrogate value for pure magnesium, rather than the figure identified in Attachment IV of the *Preliminary Factor–Valuation Memorandum*. Thus, the error made with respect to the valuation of pure magnesium for Tianjin represents the type of inadvertent typographical error described in section 735(e) of the Act, and 19 CFR 351.224(f).

Because none of the interested parties made allegations of clerical errors with respect to the valuation for pure magnesium for Tianjin after the preliminary determination or in the case briefs, in the *Final Determination* we stated that we did not intend to change the surrogate values for raw materials, not realizing that we had inadvertently used an incorrect value for pure magnesium in the preliminary determination. *See Issues and Decision Memorandum* at Comment 7. As a result, we determine that the correct surrogate value for pure magnesium should be $1,337.86 per metric ton as stated in the *Preliminary Factor–Valuation Memorandum*. *See* also the memorandum to the file from Lilit Astvatsatrian, Case Analyst, through Robert Bolling, Program Manager, *Magnesium Metal from the People's Republic of China: Factor Valuation Memorandum for the Amended Final Determination*, dated March 22, 2005 (''*Amended Final Factor Valuation Memorandum*''), at 1, and memorandum to the file from Lilit Astvatsatrian, Case Analyst, through Robert Bolling, Program Manager, *Amended Final Analysis Memorandum for the Amended Final Determination of the Antidumping Duty Investigation of Magnesium Metal from the People's Republic of China: Tianjin Magnesium International Co., Ltd. (''Tianjin'')*, dated March 22, 2005 (''*Tianjin Amended Final Analysis Memorandum*''), at 1–2. Therefore, for this amended final determination, we have revised our calculations to reflect a POI value for pure magnesium of $1,337.86.

**Allegation 2: Surrogate Value for No. 2. Flux**

Tianjin contends that page 20 of its case brief explains that No. 2 flux is comprised of several elements, but that the Department inadvertently valued only one of them in its calculations for the *Final Determination*. Tianjin claims that ''No. 2 flux is No. 2 flux, and not just one of its elements, else it would have been called by that element.''

Petitioners argue that Tianjin's comment regarding No. 2 flux is not clear and does not specify an alleged ministerial error. Further, Petitioners argue, in the *Final Determination* the Department stated that it intended to value No. 2 flux using the same surrogate value it used in the preliminary determination because respondent did not provide an alternative value. *See Issues and Decision Memorandum*, at Comment 10.

[5] In the preliminary determination, we determined that the following companies were collapsed members of the RSM group of companies for the purposes of this investigation: Nanjing Yunhai Special Metals Co., Ltd. (≥Yunhai Special≥), Nanjing Welbow Metals Co., Ltd. (≥Welbow≥), Nanjing Yunhai Magnesium Co., Ltd. (≥Yunhai Magnesium≥), Shanxi Wenxi Yunhai Metals Co., Ltd. (≥Wenxi Yunhai≥). See Memorandum to Laurie Parkhill, Director, Office 8, NME/China Group, from Laurel LaCivita, Senior Case Analyst, through Robert Bolling, Program Manager: *Antidumping Duty Investigation of Magnesium Metal from the People's Republic of China: Affiliation and Collapsing of Members of the RSM Group and its Affiliated U.S. Reseller, Toyota Tsusho America, Inc.*, dated September 24, 2004.

Therefore, Petitioners contend that, because the Department used the value it intended to use for valuation of No. 2 flux, there is no ministerial error.

**Department's Position:** First, we agree with petitioners that Tianjin's clerical error allegation with respect to No. 2 flux is not clear and that Tianjin does not specify exactly what clerical error it is alleging nor how to remedy the error. With respect to the valuation of No. 2 flux, the Department recognizes that the surrogate value used in the preliminary and final determinations may relate to only one of the three components which comprise No. 2 flux. As stated in the *Final Determination*, however, we find that this value constitutes the most appropriate information available on the record of this proceeding for purposes of valuing No. 2 flux.

While Tianjin argued in its case brief that ''No. 2 flux consists of 0.46 kg of magnesium chloride, 0.49 kg of potassium chloride, and 0.08 kg of barium chloride,'' citing RSM's September 14, 2004 submission at Exhibit 11, pages 2.13 2.15, it provides no record evidence to substantiate its allocation methodology with respect to Tianjin. There is no information on the record of this proceeding concerning the chemical specifications of the No. 2 flux used by Tianjin in the production of subject merchandise. Therefore, in our *Final Determination*, we made no changes to the valuation methodology used in the preliminary determination. *See Issues and Decision Memorandum* at Comment 10.

It appears that Tianjin's allegation of a clerical error with respect to the valuation of No. 2 flux constitutes a request for a methodological change and, as such, does not meet the definition of ministerial error under section 735(c) of the Act, and 19 CFR 351.224(f). Consequently, we have made no changes to the valuation of No. 2 flux in this amended final determination.

### Allegation 3: Surrogate Value for Packing Unskilled Labor

Tianjin states the Department used a surrogate value of $1.90/hour for unskilled packing labor. Tianjin contends that this price is above the one listed on the Department's website for surrogate wage calculations.

The Petitioners did not comment on this issue.

**Department's Position:** We have determined that we made an inadvertent error in our *Final Determination* in calculating the unskilled packing labor rate. Our preliminary determination stated that ''in accordance with 19 C.F.R. 351.408(c)(3), we applied the 2001 regression–based wage rate of US$ 0.90/hour calculated by the Department for the PRC, as posted on the Department's website at http://ia.ita.doc.gov/wages/01wages/01wages.html.'' *See Preliminary Factor–Valuation Memorandum*, at 4. However, in our preliminary and final determinations, we inadvertently used a $1.90/hour rate to value unskilled packing labor. Therefore, for the amended final determination, we have revised the $1.90/hour rate to be $0.90/hour for valuation of unskilled packing labor.

### Amended Final Determination

After analyzing all interested party comments and rebuttals, we have determined, in accordance with 735(e) of the Act and 19 CFR 351.224(e), that we made ministerial errors in our calculations performed for the final determination. Therefore, we are amending the final determination of sales at LTFV in the antidumping duty investigation of magnesium metal from the PRC. The revised dumping margins are as follows:

MAGNESIUM METAL FROM THE PRC

| Manufacturer/Exporter | Weighted–Average Margin |
|---|---|
| Tianjin | 49.66% |
| Guangling | 49.66% |

### Continuation of Suspension of Liquidation

In accordance with section 735(c)(1)(B) of the Act, we will instruct U.S. Customs and Border Protection (''CBP'') to continue to suspend liquidation of all entries of subject merchandise from the PRC, entered or withdrawn from warehouse, for consumption on or after October 4, 2004, the date of publication of the *Preliminary Determination*. We will also instruct CBP to require cash deposit or the posting of a bond equal to the estimated amount by which the normal value exceeds the U.S. price as indicated in the chart above. These instructions suspending liquidation will remain in effect until further notice.

This determination is issued and published pursuant to sections 735(d) and 777(i)(1) of the Act.

Dated: March 21, 2005.

**Joseph A. Spetrini,**

*Acting Assistant Secretary for Import Administration.*

[FR Doc. E5–1388 Filed 3–28–05; 8:45 am]

BILLING CODE: 3510–DS–S

## DEPARTMENT OF COMMERCE

### International Trade Administration

**[C–475–821]**

### Certain Stainless Steel Wire Rod from Italy: Notice of Court Decision and Suspension of Liquidation

**AGENCY:** Import Administration, International Trade Administration, Department of Commerce.

**SUMMARY:** On March 9, 2005, in *AL Tech Specialty Steel Corp., Carpenter Technology Corp., Republic Engineered Steels, Talley Metals Technology, Inc. and United Steel Workers of America, AFL–CIO/CLC v. United States* and *Acciaierie Valbruna S.r.l. and Acciaierie Di Bolzano S.p.A. v. United States*, Slip Op. 05–30 (*AL Tech II*), the Court of International Trade (CIT) affirmed the Department of Commerce's *Final Results of Redetermination Pursuant to Remand (Remand Results*), dated October 27, 2004. Consistent with the decision of the U.S. Court of Appeals for the Federal Circuit (CAFC) in *Timken Co. v. United States*, 893 F.2d 337 (Fed. Cir. 1990) (*Timken*), the Department will continue to order the suspension of liquidation of the subject merchandise, where appropriate, until there is a ''conclusive'' decision in this case. If the case is not appealed, or if it is affirmed on appeal, the Department will instruct U.S. Customs and Border Protection (CBP) to liquidate all relevant entries from Acciaierie Valbruna S.r.l. (Valbruna) and Acciaierie Di Bolzano S.p.A. (Bolzano) and revise the cash deposit rates as appropriate.

**EFFECTIVE DATE:** March 29, 2005.

**FOR FURTHER INFORMATION CONTACT:** Darla Brown, AD/CVD Operations, Office 3, Import Administration, International Trade Administration, U.S. Department of Commerce, 14th Street and Constitution Avenue NW., Washington, DC 20230; telephone: (202) 482–2786.

**SUPPLEMENTARY INFORMATION:**

### Background

Following publication of the *Final Affirmative Countervailing Duty Determination: Certain Stainless Steel Wire Rod from Italy*, 63 FR 40474 (July 29, 1998) (*Final Determination*) and *Notice of Countervailing Duty Order: Stainless Steel Wire Rod from Italy*, 63 FR 49334 (September 15, 1998), AL Tech Specialty Steel Corp., Carpenter Technology Corp., Republic Engineered Steels, Talley Metals Technology, Inc. and United Steel Workers of America, AFL–CIO/CLC (collectively, AL Tech), the petitioners in this case, and the

respondents, Valbruna and Bolzano (collectively, Valbruna/Bolzano), challenged the Department's *Final Determination* before the CIT.

In *AL Tech Specialty Steel Corp., et al. v. United States*, Slip. Op. 04–114 (CIT, September 8, 2004), the CIT Court affirmed (1) the Department's finding that the Province of Bolzano's purchase of a particular industrial site did not confer a subsidy; (2) the Department's use of a nationwide, rather than a region–specific benchmark for measuring the adequacy of remuneration of Valbruna's lease of an industrial site from the Province of Bolzano; and (3) the Department's determination that its ''tying'' practice was inapplicable to plant closure assistance provided under Law 193/84.

However, the Court remanded the following issues to the Department for further consideration: (1) the Department's determination that a two–year rent abatement granted to Valbruna on its lease of an industrial site from the Province of Bolzano conferred a subsidy; (2) the Department's determination not to adjust the benchmark used to determine adequacy of remuneration under Valbruna's lease of the Bolzano site to account for Valbruna's assumption of future extraordinary maintenance expenses; (3) the Department's determination not to adjust the lease benchmark to account for depreciation of buildings on the Bolzano industrial site; (4) the Department's determination that aid under Law 25/81 continued to confer a subsidy despite evidence that the subsidy had been repaid; (5) the Department's determination to treat Articles 2 and 4 of Law 193/84 as a single program for purposes of the small grants test; thus, allocating the aid over time rather than expensing it in the year of receipt; (6) the Department's finding that EU/European Social Fund (''ESF'') Objective 4 funding was regionally specific to Italy, and (7) the Department's finding that Italian ESF Objective 4 funding was regionally specific to Bolzano.

The *Draft Final Results Pursuant to Remand (Draft Results)* were released to parties on October 18, 2004. On October 22, 2004, the Department received comments from respondents on the *Draft Results*. Petitioners did not submit comments on the *Draft Results*. There were no substantive changes made to the *Remand Results* as a result of comments received on the *Draft Results*. On October 27, 2004, the Department responded to the CIT's Order of Remand by filing the *Remand Results*. In its *Remand Results*, the Department determined on remand that the two–year lease abatement was a bargained–for exchange and, therefore, did not constitute a countervailable subsidy and that no countervailable benefit under Law 25/81 existed for Valbruna after January 1, 1986. As a result of the remand redetermination, the net subsidy rate for Valbruna/Bolzano was revised from 1.28 to 0.65 percent *ad valorem*, which is *de minimis*.

On December 1, 2004, the CIT received comments from petitioners and respondents. On December 21, 2004, the Department responded to these comments.

On March 9, 2005, the CIT affirmed the Department's findings in the *Remand Results*. Specifically, the CIT upheld the Department's finding on remand that the rent abatement did not constitute a countervailable subsidy and the Department's treatment of Law 25/81. *AL Tech II*, Slip Op. 05–30 (CIT March 9, 2005).

**Suspension of Liquidation**

The CAFC, in *Timken*, held that the Department must publish notice of a decision of the CIT or the CAFC which is not ''in harmony'' with the Department's final determination or results. Publication of this notice fulfills that obligation. The CAFC also held that the Department must suspend liquidation of the subject merchandise until there is a ''conclusive'' decision in the case. Therefore, pursuant to *Timken*, the Department must continue to suspend liquidation pending the expiration of the period to appeal the CIT's March 9, 2005, decision or, if that decision is appealed, pending a final decision by the CAFC. The Department will instruct CBP to revise cash deposit rates, as appropriate, and to liquidate relevant entries covering the subject merchandise effective March 29, 2005, in the event that the CIT's ruling is not appealed, or if appealed and upheld by the CAFC.

Dated: March 21, 2005.

**Joseph A. Spetrini,**

*Acting Assistant Secretary for Import Administration.*

[FR Doc. E5–1386 Filed 3–28–05; 8:45 am]

BILLING CODE: 3510–DS–S

## DEPARTMENT OF COMMERCE

### National Oceanic and Atmospheric Administration

**[I.D. 032405C]**

### New England Fishery Management Council; Public Meeting

**AGENCY:** National Marine Fisheries Service (NMFS), National Oceanic and Atmospheric Administration (NOAA), Commerce.

**ACTION:** Public meeting.

**SUMMARY:** The New England Fishery Management Council (Council) is scheduling a public meeting of its Habitat Advisory Panel in April 2005. Recommendations from the panel will be brought to the full Council for formal consideration and action, if appropriate.

**DATES:** The meeting will held on Wednesday, April 13, 2005, from 9 a.m. to 5 p.m.

**ADDRESSES:** The meeting will be held at the Coastal Institute University of Rhode Island-Bay Campus, 218 South Ferry Road, Narragansett, RI 02882.

**FOR FURTHER INFORMATION CONTACT:** Paul J. Howard, Executive Director, New England Fishery Management Council (978) 465–0492. Requests for special accommodations should be addressed to the New England Fishery Management Council, 50 Water Street, Newburyport, MA 01950; telephone: (978) 465–0492.

**SUPPLEMENTARY INFORMATION:** The advisory panel will continue work on developing detailed descriptions of the gears used in fisheries of the Northeastern United States as requested by the Habitat Committee. If time allows they will review Habitat Area of Particular Concern (HAPC) proposals and prepare advice for the committee and develop Dedicated Habitat Research Areas (DHRA) sites based on the Habitat Committee's request.

Although non-emergency issues not contained in this agenda may come before this group for discussion, those issues may not be the subject of formal action during this meeting. Action will be restricted to those issues specifically listed in this notice and any issues arising after publication of this notice that require emergency action under section 305(c) of the Magnuson-Stevens Fishery Conservation and Management Act, provided the public has been notified of the Council's intent to take final action to address the emergency.

**Special Accommodations**

This meeting is physically accessible to people with disabilities. Requests for sign language interpretation or other auxiliary aids should be directed to Paul J. Howard (see **ADDRESSES**) at least five days prior to the meeting dates.

Dated: March 24, 2005.

**Peter H. Fricke,**

*Acting Director, Office of Sustainable Fisheries, National Marine Fisheries Service.*

[FR Doc. 05–6189 Filed 3–28–05; 8:45 am]

BILLING CODE 3510–22–S

## COMMODITY FUTURES TRADING COMMISSION

### Commodity Pool Operators and Commodity Pool Industry Issues; Meeting

**AGENCY:** Commodity Futures Trading Commission.

**ACTION:** Notice of public meeting.

**SUMMARY:** Notice is hereby given that the Commodity Futures Trading Commission (''Commission'') will hold a public roundtable meeting at which invited participants will discuss issues concerning commodity pool operators and the commodity pool industry. An agenda and list of participants will be available on the Commission's Web site, *http://www.cftc.gov.*

**DATES:** Wednesday, April 6, 2005, from 9 a.m. to 3:15 p.m.

**PLACE:** Commission Headquarters, 1155 21st Street, NW., Washington, DC. Lobby Level Hearing Room.

**STATUS:** Open.

**FOR FURTHER INFORMATION CONTACT:** Jean A. Webb, 202–418–5100.

Issued in Washington, DC, this 23rd day of March, 2005.

By the Commodity Futures Trading Commission.

**Jean A. Webb,**

*Secretary of the Commission.*

[FR Doc. 05–6084 Filed 3–28–05; 8:45 am]

**BILLING CODE 6351–01–M**

## CONSUMER PRODUCT SAFETY COMMISSION

**[CPSC Docket No. 05–C0006]**

### Grace Children's Products, Inc., a Corporation and Century Products, f/k/a Century Products Company, Provisional Acceptance of a Settlement Agreement and Order.

**AGENCY:** Consumer Product Safety Commission.

**ACTION:** Notice.

**SUMMARY:** It is the policy of the Commission to publish settlements which it provisionally accepts under the Consumer Product Safety Act in the **Federal Register** in accordance with the terms of 16 CFR 118.20. Published below is a provisionally-accepted Settlement Agreement with Graco Children's Products, Inc. a corporation and Century Products, f/k/a Century Products Company, containing a civil penalty of $4,000,000.00.

**DATES:** Any interested person may ask the Commission not to accept this agreement or otherwise comment on its contents by filing a written request with the Office of the Secretary by April 13, 2005.

**ADDRESSES:** Persons wishing to comment on this Settlement Agreement should send written comments to the Comment 05–C0006, Office of the Secretary, Consumer Product Safety Commission, Washington, DC 20207.

**FOR FURTHER INFORMATION CONTACT:** William J. Moore, Jr., Trial Attorney, Office of Compliance, Consumer Product Safety Commission, Washington, DC 20207; telephone (301) 504–7583.

**SUPPLEMENTARY INFORMATION:** The text of the Agreement and Order appears below.

Dated: March 22, 2005.

**Todd A. Stevenson,**

*Secretary.*

### Settlement Agreement and Order

1. This Settlement Agreement is made by and between the staff (''the staff'' ) of the United States Consumer Product Safety Commission (''the Commission'') and Graco Children's Products, Inc. (''Graco'') in accordance with 16 CFR 1118.20 of the Commission's Procedures for Investigations, Inspections, and Inquiries under the Consumer Product Safety Act (''CPSA''). This Settlement Agreement and the incorporated, attached Order resolve the staff's allegations set forth below.

*I. The Parties*

2. The United States Consumer Product Safety Commission is an independent federal regulatory agency responsible for the enforcement of the Consumer Product Safety Act, 15 U.S.C. 2051–2084, the Federal Hazardous Substances Act, 15 U.S.C. 1261–1278, and the other transferred Acts identified in 15 U.S.C. 2079.

3. Graco Children's Products, Inc. is a corporation organized and existing under the laws of the State of Pennsylvania. Graco is a wholly owned subsidiary of Newell Rubbermaid, Inc. Graco's principal offices are located at 150 Oaklands Boulevard, Exton, Pennsylvania 19341.

### Corporate Background and the Scope of This Agreement

4. In 1996, Rubbermaid Incorporated (''Rubbermaid,'') then an Ohio corporation, acquired Graco. Graco retained its separate corporate status. Until 1998, Century Products Company (''Century'') was a separate corporation organized under the laws of the State of Delaware. In 1998 Rubbermaid acquired certain assets and liabilities of Century. In 1999, Newell Co., (''Newell,'' a Delaware corporation) merged with Rubbermaid. Rubbermaid became a wholly owned subsidiary of Newell and Newell Co. changed its corporate name to Newell Rubbermaid Inc.

5. By this Agreement, Graco is settling alleged reporting violations: by Century before Century's assets were acquired by Graco's parent company Rubbermaid; by Century during the period that straddled Century's status as an independent corporation and after it was acquired by Graco's parent, Rubbermaid; by Graco when it was a family owned and operated business, prior to 1997; by Graco after it was acquired by Rubbermaid but still operating independently; and by Graco prior to its management restructuring by its current corporate parent, Newell.

*II. Staff Allegations: Century Infant Seat/Carrier*

6. Between 1991 and 1997, Century manufactured and distributed in United States commerce rear-facing infant seat/carriers, sometimes known as its ''Assura'' line. The infant seat/carrier, when separated from its anchored base in a motor vehicle, became an infant carrier for use in the home, during shopping, in recreation or otherwise. Century was, therefore, a ''manufacturer'' of a ''consumer product'' ''Distributed in commerce'' as those terms are defined in 15 U.S.C. 2052(a)(1), (4), (11) and (12).

7. While using the infant carrier, the carrying handle could crack and/or break and/or the handle could fail to lock the carrier seat securely into place. These flaws in the carrier handles and locking mechanisms are defects under section 15 of the CPSA, 15 U.S.C. 2064. The babies being carried in the carrier seats could, and did, fall from defective carriers and suffered serious injuries. All injuries occurred while this product was being used as an infant carrier.

8. Century made several attempts to strengthen the Assura handle and redesigned the locking mechanism between 1993 and 1998. It replaced between 2,700 and 3,400 handles in response to consumer complaints.

9. Century never reported this information to the Commission staff. Indeed, in 1998, when the staff first investigated the Assura car seat/carriers, Century personnel failed to provide the staff with critically important information about incidents, injuries and engineering changes. This failure to provide a complete report impeded an effective analysis of the defects and hazard associated with these products and unduly delayed implementation of a safety recall.

10. Century obtained information that reasonably supported the conclusion that its rear facing car seat/carriers, described above, contained defects which could create a substantial product hazard and created an unreasonable risk of serious injury. Century failed to report such information to the Commission as required by sections 15(b)(2) and (3) of the CPSA, 15 U.S.C. 2064(b)(2) and (3).

11. By failing to report to the Commission as required by sections 15(b)(2) and (3) of the CPSA, 15 U.S.C. 2064(b)(2) and (3), Century committed prohibited acts and violated section 19(a)(4) of the CPSA, 15 U.S.C. 2068(a)(4).

12. Century committed the prohibited acts set forth above ''knowingly,'' as that term is defined in section 20(d) of the CPSA, 15 U.S.C. 2069(d), and thus subjected itself to civil penalties, as provided in section 20 of the CPSA, 15 U.S.C. 2069.

**Century Stroller Travel Systems**

13. Between 1996 and 1999, Century and Graco/Century manufactured and distributed in United States commerce a series of multi-use products ''travel systems'' featuring the seat portion of a motor vehicle safety care seat. The seat could be removed and used as a baby carrier, a baby seat and, when placed in a stroller frame, a baby stroller. Five particular travel system models were known as the Century brand Travelite, Pioneer, ProSport, Travel Solutions and Take Two Travel Solutions (hereinafter the ''Car Seat Strollers'' or ''Travel Systems''). With respect to the non-car seat components of these travel system, Century and Graco/Century were ''manufacturers'' of ''consumer products'' ''distributed in commerce'' as those terms are defined in 15 U.S.C. 2052(a)(1), (4), (11) and (12).

14. When the baby carrier seat was used in the five Century stroller frames, the products' locking mechanism designed permitted the seat either to detach from the stroller frame or allowed the stroller frame to collapse, allowing the baby to fall forward, out of the stroller frame and onto the ground. The five seat/stroller frame locking mechanism designed were defective under section 15 of the CPSA, 15 U.S.C. 2064. These defects generated numerous consumer complaints alleging many injuries for the five models, from minor to serious in nature.

15. Neither Century nor Graco filed a section 15(b) report until the staff inquired about the Take 2 Strollers in 2000.

16. Century obtained information which reasonably supported the conclusion that the five travel systems named above, contained defects which could create a substantial product hazard. Century failed to report such information to the Commission as required by section 15(b)(2) of the CPSA, 15 U.S.C. 2064(b)(2).

17. By failing to report to the Commission as required by section 15(b)(2) of the CPS, 15 U.S.C. 2064(b)(2), Century committed prohibited acts and violated section 19(a)(4) of the CPSA, 15 U.S.C. 2068(a)(4).

18. Century committed the prohibited acts set forth above ''knowingly,'' as that term is defined in section 20(d) of the CPSA, 15 U.S.C. 2069(d), and thus subjected itself to civil penalties, as provided in section 20 of the CPSA, 15 U.S.C. 2069.

**Graco High Chair Models 3170, 36051 and 74001**

19. From January, 1996 through November, 1997 Graco manufactured and distributed in United States commerce children's High Chair Models 3170, 36051 and 74001 (''High chairs''). Graco was, therefore, a ''manufacturer'' of a ''consumer product'' ''distributed in commerce'' as those terms are defined in 15 U.S.C. 2052(a)(1), (4), (11) and 12).

20. Graco designed the High Chairs with four metal supporting legs. Each of the two front legs is comprised of two metal tubes, one inserted into the open end of the other. the two-piece legs were designed to stay together, mated by friction and gravity. When the High Chair was in use, the front supporting leg pieces could, and did, come apart, causing the entire High Chair to fall forward to the ground. In July 1996, after receiving consumer complaints, Graco attempted to prevent the legs from separating by extending the leg socket rib length. Graco continued to receive High Chair leg separation complaints and, in November 1997, Graco ordered the use of a spring loaded push button on one section of each leg designed to fit into a corresponding hole in the other half of the leg connection. This design was intended to form a positive locking mechanism for the High Chair legs.

21. After the design changed described in paragraph 20 above, Graco continued to receive consumer complaints of front leg separation and minor to serious child injuries associated with the friction fit design units made before November 1997. The friction fit designs used by Graco were defects under section 15 of the CPSA, 15 U.S.C. 2064.

22. Graco did not report information about this product until requested to do so by CPSC in 2000.

23. Graco obtained information which reasonably supported the conclusion that its High Chairs contained defects which could create a substantial product hazard. Graco failed to report to the Commission as required by section 15(b)(2) of the CPSA, 15 U.S.C. 2064(b)(2).

24. By failing to report to the Commission as required by section 15(b)(2) of the CPSA, 15 U.S.C. 2064(b)(2), Graco committed a prohibited act. Graco thereby violated section 19j(a)(4) of the CPSA, 15 U.S.C. 2068(a)(4).

25. Graco committed the prohibited act set forth above ''knowingly'' as that term is defined in section 20(d) of the CPSA, 15 U.S.C. 2069(d), and thus subjected itself to civil penalties, as provided in section 20 of the CPSC, 15 U.S.C. 2069.

**Graco Carrier Cradle Swings**

26. From August 1993 through August 1997, Graco manufactured and distributed in United States commerce Infant Carriers that could also be used with a Graco Infant Swing assembly. These carrier/swings are known as models 1300, 1301, 1310, 1350, 1501, 1502, 1530, 1723, 2788, 5510, 8108 and 36264 and Graco distributed them nationwide. Graco was, therefore, a ''manufacturer'' of a ''consumer product'' ''distributed in commerce'' as those terms are defined in 15 U.S.C. 2052 (a)(1), (4), (11) and (12).

27. The design of the plastic carrier seat handle, in connection with the plastic materials used to fabricate the seat, can give the consumer the false impression, through an audible ''click'' cue, that the carrier handle is in a safely locked position when it is not. These are product defects under section 15 of the CPSA, 15 U.S.C. 2064. From 1993 to 1997, these defects resulted in Graco receiving consumer complaints citing injuries, from minor to serious in nature. The incidents occurred when the seats fell forward because the handle was not securely locked. Graco stopped making the products in 1997.

28. Graco first reported to the staff in 1997. Graco's original report failed to provide complete information.

29. Well before 1997, Graco Children's Products, Inc. obtained information which reasonably supported the conclusion that its Carriers and Carrier Swing Seats contained defects which could create a substantial product hazard and created an unreasonable risk of serious injury. Graco failed to report to the Commission as required by sections 15(b)(2) and (3) of the CPSA, 15 U.S.C. 2064(b)(2) and (3).

30. By failing to report to the Commission as required by sections 15(b)(2) and (3) of the CPSA, 15 U.S.C. 2064(b)(2) and (3), Graco committed prohibited acts and violated section 19(a)(3) of the CPSA, 15 U.S.C. 2068(a)(3).

31. Graco committed the prohibited acts, set forth above, ''knowingly,'' as that term is defined in section 20(d) of the CPSA, 15 U.S.C. 2069(d), and thus subjected itself to civil penalties, as provided in section 20 of the CPSA, 15 U.S.C. 2069.

**Graco Infant Swings**

32. From approximately 1988 through 1998, Graco manufactured and distributed in United States commerce certain infant swings. For the purposes of this Settlement Agreement, the swing designs will be designated as Designs ''A,'' ''B,'' and ''C.'' Graco was, therefore, a ''manufacturer'' of ''consumer products'' ''distributed in commerce'' as those terms are defined in 15 U.S.C. 2052(a)(1), (4), (11) and (12).

33. Design A, made prior to 1988 through 1991, consisted of a cloth seat with leg holes. A waist belt sometimes accompanied the Design A swings. A plastic tray was also available. The tray could help keep the child from falling out of the swing. As designed, Design A required the consumer to remove and reinstall a screw to hold the tray in place each time the swing was used. This design contributed to use of the swing without the tray screw, thereby making it easier for the tray to loosen or fall off the swing and a baby to fall out of the swing. These design characteristics are product defects under section 15 of the CPSA, 15 U.S.C. 2064.

34. During the limited production period for which Graco incident data was available, the company had received reports of dozens of minor to serious injuries and one death. On or about November 1991, Graco made tray design changes that led to what is designated here as Graco Infant Swing ''Design B.''

35. From November 1991 through September 1995, the Graco Infant Swings, Design B, used a plastic shell with leg holes for the seat and a waist belt. Design B also used a tray tube that could slide into the swing hanger tube. The hanger tube was equipped with a spring loaded button on one side only to secure the restraining tray to the swing frame tube. The spring loaded button could pop out through a hole in the tray tube and, if operated successfully, better secure the restraining tray. The product could also be assembled with the hanger tube reversed, however, because the unassembled U-shaped hanger tube was symmetrical. In the reversed configuration, the swing would be completely operational and the function of the spring-loaded button (now on the wrong side), would be negated. The restraining tray (much like Design A, above) would be unsecured and could slide off during swing use. The product instructions did not address the potential for reverse assembly. The design and instructions were defects under section 15 of the CPSA, 15 U.S.C. 2064.

36. Graco received numerous consumer complaints regarding the Design B Infant Swings. Most complaints reported that babies fell out of the swing. Graco modified Design B in November 1995 to incorporate asymmetrical hanger tubes intended to protect against reverse assembly.

37. From 1994 through July 1995, Graco manufactured and distributed Design C type Infant swings. This swing also used a molded plastic shell with leg holes and added a restraining tray with a T-bar attached. Graco made some Design C Infant Swings with a waist belt and a crotch strap, and some without the crotch strap. Like Design B, Design C had symmetrical, hanger tubes with a spring loaded button on one side of the tube only. Design C was also susceptible to reverse assembly. As a result, consumers could have an unsecured restraining tray. The Design C Infant Swings were defective under section 15 of the CPSA, 15 U.S.C. 2064.

38. Graco received consumer reports of incidents and injuries and four reports of death involving the Design C Infant Swings. Most alleged that babies fell out of the swing. Four babies were found caught by the head and arms or by the neck. Graco modified Design C in November 1995.

39. Graco reported the information it possessed related to the Design A, B, and C Infant Swings to the Commission after the staff contacted Graco in 2000.

40. Graco Children's Products, Inc. obtained information which reasonably supported the conclusion that its Design A, B and C Infant Swings contained defects which could create a substantial product hazard and/or created an unreasonable risk of serious injury or death. Graco failed to report to the Commission as required by sections 15(b)(2) and (3) of the CPSA, 15 U.S.C. 2064(b)(2) and (3).

41. By failing to report to the Commission as required by sections 15(b)(2) and (3) of the CPSA, 15 U.S.C. 2064(b)(2) and (3), Graco committed prohibited acts and violated section 19(a)(4) of the CPSA, 15 U.S.C. 2068(a)(4).

42. Graco committed the prohibited acts ''knowingly,'' as defined in section 20(d) of the CPSA, 15 U.S.C. 2069(d), and thus subjected itself to civil penalties, as provided in section 20 of the CPSA, 15 U.S.C. 2069.

**Graco Travel Lite Infant Swing**

43. From May to December 2003, Graco manufactured, sold, and distributed in United States commerce the Travel Lite Infant Swing (''Travel Lite'' or ''Swing''), model numbers 1850JJP, 1850JGB and 185055P. Graco is, therefore, a ''manufacturer'' of ''consumer products'' ''distributed in commerce'' as those terms are defined in 15 U.S.C. 2052(a)(1), (4), (11) and (12).

44. Soon after introducing the Travel Lite into commerce, Graco began to receive several consumer complaints of infants falling forward out of the swing and infants' heads falling forward and to the side of the swing. The Swing's seat did not recline sufficiently—the seat propped infants up too much toward a vertical position, allowing babies to fall forward. Contributing to this problem was the Swing's restraint system: a single lap belt. The result of these design characteristics was that infants were both: (a) Falling forward and striking the ground, head or face first, and/or (b) falling to one side and striking the edge of the molded plastic seat shell and/or the bar of the Swing's A-frame structural support. Graco also received consumer complaints of the carrying handle falling down, hitting or nearly hitting infants in the head. The Travel Lite carrying handle design allowed it to fall or be pushed down from the carry position. These elements in the Travel Lite Swing are defects under section 15 of the CPSA, 15 U.S.C. 2064.

45. Throughout the summer of 2003, Graco developed and implemented interim design changes to address some of the swing defects. Graco continued to receive complaints alleging minor to moderate injuries. In November and December 2003, Graco implemented two additional, permanent, prospective design changes to address remaining defects.

46. Graco reported information about the Travel Lite swing after staff contacted Graco in November 2003 to inquire about these Swings.

47. Graco Children's Products, Inc. obtained information which reasonably supported the conclusion that its Travel Lite Swings contained defects which could create a substantial product hazard. Graco failed to report to the

Commission as required by section 15(b)(2) of the CPSA, 15 U.S.C. 2064(b)(2).

48. By failing to report to the Commission as required by section 15(b)(2) of the CPSA, 15 U.S.C. 2064(b)(2), Graco committed prohibited acts and violated section 19(a)(4) of the CPSA, 15 U.S.C. 2068(a)(4).

49. Graco committed the prohibited acts set forth above ''knowingly,'' as that term is defined in section 20(d) of the CPSA, 15 U.S.C. 2069(d), and thus subjected itself to civil penalties, as provided in section 20 of the CPSC, 15 U.S.C. 2069.

**Graco Pack 'N' Play Portable Play Yards**

50. From 1988 to 2001, Graco manufactured, sold, and distributed in United States commerce the Pack 'N' Play portable crib/play yard (''Play Yard''). Graco is, therefore, a ''manufacturer'' of ''consumer products'' ''distributed in commerce'' as those terms are defined in 15 U.S.C. 2052 (a)(1), (4), (11) and (12).

51. The subject Play Yards, used an open corner design. Open-ended metal tubes formed the four top rails and were secured to four hard plastic top corner pieces. Babies inserted their fingers into the space between the metal tubes and the plastic corner pieces both during and after Play Yard set up. Their fingers were severed, lacerated and/or avulsed between the first joint and the end of the fingertip. Adults reported pinched and/or lacerated hands from the open corner design during Play Yard assembly. These are product defects under section 15 of the CPSA, 15 U.S.C. 2064.

52. Graco stopped making the products with the open corner design in 2001 and first reported to the staff in 2004.

53. Well before 2004, Graco received consumer complaints that reported pinching, laceration, avulsion and amputation injuries, to young children and pinching or cuts to adults. Before 1997, Graco Children's Products, Inc. obtained information which reasonably supported the conclusion that its Play Yard contained defects which could create a substantial product hazard and created an unreasonable risk of serious injury. Graco failed to report to the Commission as required by sections 15(b)(2) and (3) of the CPSA, 15 U.S.C. 2064(b)(2) and (3). By failing to report to the Commission as required by sections 15(b)(2) and (3) of the CPSA, 15 U.S.C. 2064(b)(2) and (3), Graco committed prohibited acts and violated section 19(a)(3) of the CPSA, 15 U.S.C. 2068(a)(3).

54. Graco committed the prohibited acts, set forth above, ''knowingly,'' as that term is defined in section 20(d) of the CPSA, 15 U.S.C. 2069(d), and thus subjected itself to civil penalties, as provided in section 20 of the CPSA, 15 U.S.C. 2069.

**Graco MetroLite Strollers**

55. From 2000 through 2001, Graco manufactured, sold, and distributed in United States commerce a line of baby strollers know as the MetrolLite line (''MetroLite''), model numbers 6110DW and 6113RV. Graco is, therefore, a ''manufacturer'' of ''consumer products'' ''distributed in commerce'' as those terms are defined in 15 U.S.C. 2052 (a)(1), (4), (11) and (12).

56. The MetroLite strollers fold up to make transport easier. The strollers use two latches, one on each side, designed to lock the stroller in a rigid, secure position when in use. The latches are covered with molded plastic and are not visible or accessible to the user. When set up and in use, however, one or both of the MetroLite latches may not fully engage. The stroller may appear to be set up and secure when it is not. A bump or jostle during use may allow the MetroLite to collapse. This is a product defect under section 15 of the CPSA, 15 U.S.C. 2064.

57. Graco first reported to the staff in 2004.

58. Beginning in 2001 through 2004, Graco received consumer complaints that reported numerous collapsing incidents and minor to moderate injuries. Graco Children's Products, Inc. obtained information which reasonably supported the conclusion that its MetroLite contained a defect which could create a substantial product hazard. Graco failed to report to the Commission as required by section 15(b)(2) of the CPSA, 15 U.S.C. 2064(b)(2).

59. By failing to report to the Commission as required by section 15(b)(2) of the CPSA, 15 U.S.C. 2064(b)(2), Graco committed a prohibited act and violated section 19(a)(3) of the CPSA, 15 U.S.C. 2068(a)(3).

60. Graco committed the prohibited act, set forth above, ''knowingly,'' as that term is defined in section 20(d) of the CPSA, 15 U.S.C. 2069(d), and thus subjected itself to civil penalties, as provided in section 20 of the CPSA, 15 U.S.C. 2069.

**Graco Toddler Bed**

61. From 1994 through 2000, Graco manufactured, sold and distributed in United States commerce a Graco toddler bed (''Toddler Bed'') for children making the transition from crib to twin size bed. Graco is, therefore, a ''manufacturer'' of ''consumer products'' ''distributed in commerce'' as those terms are defined in 15 U.S.C. 2052 (a)(1), (4), (11) and (12).

62. The Toddler Bed has head and footboards and partial guardrails with vertical slats. The vertical slat openings are 2⅜ inches in width. The size of the openings permits children's arms and legs to become caught. This is a product defect under section 15 of the CPSA, 15 U.S.C. 2064.

63. Graco first reported to the staff in 2004. From 1995 through 2004, Graco received consumer complaints that reported numerous incidents and injuries, including several broken arms and legs when children twisted and/or fell while a limb was in a slat opening. Graco Children's Products, Inc. obtained information which reasonably supported the conclusion that its Toddler Beds contained a defect which could create a substantial product hazard and created an unreasonable risk of serious injury. Graco failed to report to the Commission as required by sections 15(b)(2) and (3) of the CPSA, 15 U.S.C. 2064(b)(2) and (3).

64. By failing to report to the Commission as required by sections 15(b)(2) and (3) of the CPSA, 15 U.S.C. 2064(b)(2) and (3), Graco committed prohibited acts and violated section 19(a)(3) of the CPSA, 15 U.S.C. 2068(a)(3).

65. Graco committed the prohibited acts, set forth above, ''knowingly,'' as that term is defined in section 20(d) of the CPSA, 15 U.S.C. 2069(d), and thus subjected itself to civil penalties, as provided in section 20 of the CPSA, 15 U.S.C. 2069.

**Graco Duo Strollers**

66. From 1994 through 2000, Graco manufactured, sold and distributed in United States commerce a line of strollers that seat two children known as Grace Duo Strollers (''Duo''). Graco is, therefore, a ''manufacturer'' of ''consumer products'' ''distributed in commerce'' as those terms are defined in 15 U.S.C. 2052(a)(1), (4), (11) and (12).

67. The Duo latching mechanism design makes it difficult for the consumer to set up the stroller in a secure, fully locked position. Though not securely locked, the Duo can appear to be properly set up and ready for use. When not fully engaged, the Duo can collapse if bumped or jostled. This is a product defect under section 15 of the CPSA, 15 U.S.C. 2064.

68. Graco first reported to the staff in 2004. From 1997 through 2004, Graco

received consumer complaints that reported numerous collapsing incidents and moderate to severe injuries. Graco Children's Products, Inc. obtained information which reasonably supported the conclusion that its Duo strollers contained a defect which could create a substantial product hazard and created an unreasonable risk of serious injury. Grace failed to report to the Commission as required by sections 15(b)2) and (3) of the CPSA, 15 U.S.C. 2064(b)(2) and (3).

69. By failing to report to the Commission as required by sections 15(b)(2) and (3) of the CPSA, 15 U.S.C. 2064(b)(2) and (3), Graco committed prohibited acts and violated section 19(a)(3) of the CPSA, 15 U.S.C. 2068(a)(3).

70. Graco committed the prohibited acts, set forth above, ''knowingly,'' as that term is defined in section 20(d) of the CPSA, 15 U.S.C. 2069(d), and thus subjected itself to civil penalties, as provided in section 20 of the CPSA, 15 U.S.C. 2069.

*III. Response of Graco Children's Products, Inc.*

71. On behalf of Century Company, and, in its own right, Graco denies the allegations of the staff, set forth in paragraphs 6–70 above; it denies that the products named herein, when assembled, maintained and used properly, contain any defect which could create a substantial product hazard or create a substantial risk of injury pursuant to section 15(a) of the CPSA, 15 U.S.C. 2064(a). Graco also denies that the products, when assembled, maintained and used properly, create an unreasonable risk of serious injury or death pursuant to section 15(b) of the CPSA, 15 U.S.C. 1064(b).

72. Graco further denies that it violated the reporting requirements of section 15(b) of the CPSA, 15 U.S.C. 2064(b), and denies that it violated the reporting requirements of section 19(a)(4) of the CPSA, 15 U.S.C. 2064(a)(4). Graco denies that the information available to it and provided to the Commission reasonably supported the conclusion that the products contained a defect which could create a substantial product hazard or created an unreasonable risk of serious injury or death, and therefore, no report was required under section 15(b) of the CPSA, 15 U.S.C. 2064(b).

73. In settling this matter, Graco does not admit any fault, liability, or statutory or regulatory violation.

74. Graco further asserts, as a general matter, that Century and Graco received a relatively small percentage of complaints concerning the above-mentioned products in relation to the number of products in distribution; that it developed product improvements to address the complaints on various products in question; that it considered the complaints and the reporting requirements of the CPSA and it did not ''knowingly'' violate any reporting requirements.

75. Graco further asserts that with respect to the Pack 'N Play, its corner design was common in the industry and, with respect to the Graco Toddler Bed, in the absence of an industry standard for toddler beds, the Graco product incorporated vertical slat openings of 2⅜ inches in width, consistent with the federal crib standard in 16 CFR 1508.

76. In cooperation with the staff, Graco agreed to undertake corrective action for each product identified in this Settlement Agreement for which such action was requested by CPSC.

77. Graco is entering into this Settlement Agreement for settlement purposes only, to resolve outstanding issues that primarily occurred prior to Newell's acquisition of Century and Graco and to avoid incurring additional legal costs and expenses. This settlement does not constitute, nor is it evidence of, an admission of any fault, liability, violation of law, or wrongdoing by Century or Graco.

*IV. Agreement of The Parties*

78. The Commission has jurisdiction over this matter and over Graco and Century pursuant to the Consumer Product Safety Act (CPSA), 15 U.S.C. 2051 *et seq.*

79. This Settlement Agreement and Order is a compromise resolution of the matters described above and the parties enter into this Agreement solely for the purpose of settlement.

80. Graco knowingly, voluntarily and completely waives any rights it may have (1) to the issuance of a Complaint in this matter, (2) to an administrative or judicial hearing with respect to the staff allegations cited herein, (3) to judicial review or other challenge or contest of the validity of the Commission's Order, (4) to a determination by the Commission as to whether violations of sections 15(b) and 19(a)(4) of the CPSA, 15 U.S.C. 2064(b) and 2068(a)(4), have occurred, (5) to a statement of findings of fact and conclusions of law with regard to the staff allegations, and (6) to any claims under the Equal Access to Justice Act.

81. Upon provisional acceptance of this Settlement Agreement and Order by the Commission, this Settlement Agreement and Order shall be placed on the public record and shall be published in the **Federal Register** in accordance with 16 CFR 1118.20. If the Commission does not receive any written objections within 15 days, the Agreement will be deemed finally accepted on the 16th day after the **Federal Register** publication date.

82. Graco shall pay a civil penalty in the amount of four million and no/dollars ($4,000,000.00) as set forth below and in the incorporated Order. The payment shall be made in four equal installments of one million and no/dollars ($1,000,000.00) each. The first payment shall be delivered to the Commission within the (10) calendar days of final acceptance of the Settlement Agreement and Order. The second payment shall be delivered to the Commission on or before June 15, 2005, the third payment by September 15, 2005 and the fourth and final payment by December 15, 2005.

83. Upon the failure of Graco to deliver the first, or any, of its $1,000,000.00 payments in full to the Commission by the due dates set forth above, the entire amount of the civil penalty, $4,000,000.00 shall be due and payable and delivered to the Commission by the seventh calendar day following the original due date of the missed payment. Upon the failure by Graco to deliver any payment in full to the Commission in accordance with the terms of this paragraph, interest on the outstanding balance shall accrue and be paid at the federal legal rate of interest under the provisions of 28 U.S.C. 1961(a) and (b).

84. Compliance, by this Settlement Agreement and the attached Order, resolve the allegations of violations of sections 15(b) and 19(a)(4) of the CPSA, 15 U.S.C. 2064(b) and 2068(a)(4), regarding the products named herein.

85. The Commission may publicize this Settlement Agreement and Order.

86. The Commission's Order in this matter is issued under the provisions of the CPSA, 15 U.S.C. 2051 *et seq.* A violation of this Order may subject Graco to appropriate legal action.

87. Graco agrees to entry of the attached Order, which is incorporated herein by reference, and agrees to be bound by its terms.

88. This Settlement Agreement is binding upon Graco and its assigns and successors.

89. This Settlement Agreement may be used in interpreting the implementing Order. Agreements, understandings, representations, or interpretations apart from those contained in this Settlement Agreement and Order may not be used to vary or

contradict the terms of this Settlement Agreement and Order.

Graco Children's Products, Inc.

Dated: March 14, 2005.

Dale Matschullat,

*Vice President, General Counsel and Corporate Secretary, Newell Rubbermaid, Inc.*

The U.S. Consumer Products Safety Commission

John Gibson Mullan,

*Associate Executive Director, Office of Compliance.*

Eric L. Stone,

*Director, Legal Division Office of Compliance.*

Dated: March 15, 2005.

By William J. Moore, Jr.,

*Trial Attorney, Legal Division, Office of Compliance.*

## Order

Upon consideration of the Settlement Agreement entered into between Graco Children's Products, Inc. (hereinafter, ''Graco''), a corporation, and the staff of the Consumer Product Safety Commission, and the U.S. Consumer Product Safety Commission (hereinafter, ''Commission''), having jurisdiction over the subject matter and Graco, and it appearing that the Settlement Agreement and Order is in the public interest, it is

*Ordered*, that the subject Settlement Agreement be, and hereby is accepted; and it is further

*Ordered*, that, upon final acceptance of the Settlement Agreement and Order, Graco shall pay the Commission a civil penalty in the amount of *Four Million and* no/100 dollars ($4,000,000.00), in four equal installments of one million dollars and no/100 ($1,000,000.00) each. The first installment shall be paid and delivered to the Commission within ten (10) calendar days of final acceptance of the Settlement Agreement and Order. The second payment of one million and 00/100 dollars ($1,000,000.00) shall be paid and delivered to the Commission on or before June 15, 2005, the third payment of one million and 00/100 dollars ($1,000,000.00) shall be paid and delivered to the Commission on or before September 15, 2005, and the fourth payment of one million and 00/100 dollars ($1,000,000.00) shall be paid and delivered to the Commission on or before December 15, 2005; and it is further

*Ordered*, that, upon the failure of Graco to deliver the first, or any, of its $1,000,000.00 payments in full to the Commission by the due dates set forth in this Order, the entire amount of the civil penalty, $4,000,000.00, shall be due and payable and delivered to the Commission by the seventh calendar day following the original due date of the missed payment. Upon the failure by Graco to deliver any payment in full to the Commission in accordance with the terms of the subject Settlement Agreement and this Order, interest on the outstanding balance shall accrue and shall be paid by Graco to the Commission at the federal legal rate of interest under the provisions of 28 U.S.C. 1961(a) and (b).

Provisionally accepted and Provisional Order issued on the 22nd day of March, 2005.

By order of the Commission.

**Todd Stevenson,**

*Secretary, U.S. Consumer Product Safety Commission.*

[FR Doc. 05–6066 Filed 3–28–05; 8:45 am]

BILLING CODE 6355–01–M

---

## DEPARTMENT OF DEFENSE

### Office of the Secretary

### Privacy Act of 1974; System of Records

**AGENCY:** Office of the Secretary, DoD.

**ACTION:** Notice to add a system of records; DHA 12-Third Party Outpatient Collection System.

**SUMMARY:** The Office of the Secretary of Defense proposes to add a system of records to its inventory of record systems subject to the Privacy Act of 1974 (5 U.S.C. 552a), as amended.

**DATES:** The changes will be effective on April 28, 2005, unless comments are received that would result in a contrary determination.

**ADDRESSES:** Send comments to OSD Privacy Act Coordinator, Records Management Section, Washington Headquarters Services, 1155 Defense Pentagon, Washington, DC 20301–1155.

**FOR FURTHER INFORMATION CONTACT:** Ms. Juanita Irvin at (703) 601–4722, extension 110.

**SUPPLEMENTARY INFORMATION:** The Office of the Secretary of Defense notices for systems of records subject to the Privacy Act of 1974 (5 U.S.C. 552a), as amended, have been published in the **Federal Register** and are available from the address above.

The proposed systems reports, as required by 5 U.S.C. 552a(r) of the Privacy Act of 1974, as amended, were submitted on March 18, 2005, to the House Committee on Government Reform, the Senate Committee on Homeland Security and Governmental Affairs, and the Office of Management and Budget (OMB) pursuant to paragraph 4c of Appendix I to OMB Circular No. A–130, 'Federal Agency Responsibilities for Maintaining Records About Individuals,' dated February 8, 1996 (February 20, 1996, 61 FR 6427).

Dated: March 22, 2005.

**L.M. Bynum,**

*OSD Federal Register Liaison Officer, Department of Defense.*

**DHA 12**

**SYSTEM NAME:**

Third Party Outpatient Collection System.

**SYSTEM LOCATION:**

Resource Information Technology Program Office, 5205 Leesburg Pike, Suite 1100, Falls Church, VA 22041–3891.

**CATEGORIES OF INDIVIDUALS COVERED BY THE SYSTEM:**

Members of the uniformed services, dependents and retired military members of the Uniformed Services receiving outpatient health services approved by the Department of Defense. All commercial insurance carriers and parties against whom recovery has been sought by the Department of Defense Military Health System. All parties involved in support of the collection activities for outpatient health care approved by the Department of Defense.

**CATEGORIES OF RECORDS IN THE SYSTEM:**

Insurance Policy Information Data: This includes policy number, group number, group name, policy effective date, policy category, insurance company, insurance type, policy holder, whether policy holder is insured through their employer, drug coverage data regarding authority to bill for pharmaceuticals.

**EMPLOYER INFORMATION DATA:**

This includes employer name, address, and a contact name for the policyholder.

**BILLING INFORMATION DATA:**

This includes bill type (clinic, pharmacy, laboratory/radiology, ambulance), date-of-service, patient identification number, patient name, policy number, provider code/description, office visit code description, Medical Expense and Performance Reporting System code/description, diagnosis code/description, billing amount, user who created the bill, date bill was created, and status of bill and source of billing data.

**ACCOUNTING INFORMATION DATA:**

This includes control number, transaction code, debit amount, credit amount, check number, Batch posting number, balance, patient identification, patient name, encounter date, comments, entry date and follow-up date.

**INSURANCE COMPANY DATA:**

This contains tables for insurance company, policy, provider, fees, codes, rates, and procedure maintenance.

**AUTHORITY FOR MAINTENANCE OF THE SYSTEM:**

The Balanced Budget Refinement Act of 1999, Pub. Law 106–113, Section 103; 10 U.S.C. 1095; 42 CFR 413.20; DoD 6010.15–M, Chapter 3; and E.O. 9397 (SSN).

**PURPOSE(S):**

The purpose of the system is to establish a standard patient accounting system for health care billing practices. It shall assist Military Treatment Facilities in the collecting, tracking, and reporting of data required for the DoD Third Party Collection Program outpatient billing process by the adoption of standard commercial medical coding and billing practices to military hospitals.

**ROUTINE USES OF RECORDS MAINTAINED IN THE SYSTEM, INCLUDING CATEGORIES OF USERS AND THE PURPOSES OF SUCH USES:**

In addition to those disclosures generally permitted under 5 U.S.C. 552a(b) of the Privacy Act, these records or information contained therein may specifically be disclosed outside the DoD as a routine use pursuant to 5 U.S.C. 552a(b)(3) as follows:

To the National Data Clearinghouse, an electronic healthcare clearinghouse, for purposes of converting the data to an industry-wide format prior to forwarding the billing information to the insurance companies for payment.

The 'DoD Blanket Routine Uses' set forth at the beginning of OSD's compilation of systems of records notices apply to this system.

**POLICIES AND PRACTICES FOR STORING, RETRIEVING, ACCESSING, RETAINING, AND DISPOSING OF RECORDS IN THE SYSTEM:**

**STORAGE:**

Records are maintained on paper in file folders, on a microcomputer system, on diskette, on compact disk.

**RETRIEVABILITY:**

Records are retrieved By the sponsor's or participating individual's name and/or Social Security Number, family member prefix (a two-digit code identifying the person's relationship to the Military Sponsor).

**SAFEGUARDS:**

Records are maintained in controlled areas accessible only to authorized personnel. Daily and monthly tape backups are performed. The archived records are stored in a secure location at each facility. Physical security differs from site to site, but both the manual and the automated records are maintained in controlled areas accessible only by authorized personnel. Access to computerized data is restricted by passwords.

**RETENTION AND DISPOSAL:**

Records containing patient encounter, billing, and accounting data are maintained in the system for six years. Current and past year data, needed in the system for billing and collection purposes, are in an active file. The records are destroyed after a minimum of six years as required by statute. The disposal of records is performed by burning tape or shredding paper.

**SYSTEM MANAGER(S) AND ADDRESS:**

Program Manager, Resources Information Technology Program Office, 5205 Leesburg Pike, Suite 1100, Falls Church, VA 22041–3891.

**NOTIFICATION PROCEDURE:**

Individuals seeking to determine whether this system contains information about themselves should address written inquires to the TRICARE Management Activity, Department of Defense, ATTN: TMA Privacy Officer, 5111 Leesburg Pike, Suite 810, Falls Church, VA. 22041–3206.

Request should contain participant's and/or sponsor's full name, their Social Security Number, and current address and telephone number and the names of the Military Treatment Facility or Facilities in which they have received medical treatment.

**RECORD ACCESS PROCEDURES:**

Individuals seeking to determine whether information about themselves is contained in this system of records should address written inquiries to the TRICARE Management Activity, Department of Defense, ATTN: TMA Privacy Officer, 5111 Leesburg Pike, Suite 810, Falls Church, VA 22041–3206.

Requests should contain participant's and/or sponsor's full name, their Social Security Number, and current address and telephone number and the names of the Military Treatment Facility or Facilities in which they have received medical treatment.

**CONTESTING RECORD PROCEDURES:**

The OSD rules for accessing records, for contesting contents and appealing initial agency determinations are published in OSD Administrative Instruction 81; 32 CFR part 311; or may be obtained from the system manager.

**RECORD SOURCE CATEGORIES:**

Information is obtained from an automated medical records system, the Composite Health Care System (specifically, the Ambulatory Data Module), which is automatically sent to the third party outpatient collection program.

**EXEMPTIONS CLAIMED FOR THE SYSTEM:**

None.

[FR Doc. 05–6124 Filed 3–28–05; 8:45 am]

**BILLING CODE 5001–06–P**

## DEPARTMENT OF ENERGY

### Environmental Management Site-Specific Advisory Board, Fernald

**AGENCY:** Department of Energy.

**ACTION:** Notice of open meeting.

**SUMMARY:** This notice announces a meeting of the Environmental Management Site-Specific Advisory Board (EMSSAB), Fernald. The Federal Advisory Committee Act (Pub. L. 92–463, 86 Stat. 770) requires that public notice of this meeting be announced in the **Federal Register**.

**DATES:** Saturday, April 9, 2005, 8:30 a.m.–12 noon.

**ADDRESSES:** Fernald Closure Project Site, Crosby Township Senior Center, 8910 Willey Road, Harrison, Ohio 45030.

**FOR FURTHER INFORMATION CONTACT:** Doug Sarno, The Perspectives Group, Inc., 1055 North Fairfax Street, Suite 204, Alexandria, VA 22314, at (703) 837–1197, or e-mail: *djsarno@theperspectivesgroup.com.*

**SUPPLEMENTARY INFORMATION:**

*Purpose of the Board:* The purpose of the Board is to make recommendations to DOE in the areas of environmental restoration, waste management, and related activities.

*Tentative Agenda*

*Goals:*

- Review Plans for Fernald Local Stakeholder Organization (LSO)
- Review the Revised Legacy Management and Institutional Controls Plan
- Advance Fernald Citizen's Advisory Board (FCAB) History Project
- Finalize plans for a Fernald History

Roundtable
8:30 a.m.—Call to Order
8:30 a.m.—Updates and Announcements
- Projects Updates
- Silos Projects Status
- Ex-Officio Updates

9:15 a.m.—Legacy Management and Institutional Controls Plan
10 a.m.—Break
10:15 a.m.—Local Stakeholder Organization (LSO) for Fernald
10:45 a.m.—History Roundtable Plans
11 a.m.—FCAB Project Update
11:30 a.m.—Prepare for SSAB Chairs Meeting
11:50 a.m.—Public Comment
12 p.m.—Adjourn

*Public Participation:* The meeting is open to the public. Written statements may be filed with the Board chair either before or after the meeting. Individuals who wish to make oral statements pertaining to agenda items should contact the Board chair at the address or telephone number listed below. Requests must be received five days prior to the meeting and reasonable provisions will be made to include the presentation in the agenda. The Deputy Designated Federal Officer, Gary Stegner, Public Affairs Office, Ohio Field Office, U.S. Department of Energy, is empowered to conduct the meeting in a fashion that will facilitate the orderly conduct of business. Individuals wishing to make public comment will be provided a maximum of five minutes to present their comments. This notice is being published less than 15 days before the date of the meeting due to programmatic issues.

*Minutes:* The minutes of this meeting will be available for public review and copying at the Freedom of Information Public Reading Room, 1E–190, Forrestal Building, 1000 Independence Avenue, SW., Washington, DC 20585 between 9 a.m. and 4 p.m., Monday–Friday, except Federal holidays. Minutes will also be available by writing to the Fernald Citizens' Advisory Board, Phoenix Environmental Corporation, MS–76, Post Office Box 538704, Cincinnati, OH 43253–8704, or by calling the Advisory Board at (513) 648–6478.

Issued at Washington, DC on March 22, 2005.

**Carol Matthews,**

*Acting Advisory Committee Officer.*

[FR Doc. 05–6134 Filed 3–28–05; 8:45 am]

BILLING CODE 6450–01–P

## DEPARTMENT OF ENERGY

### Environmental Management Site-Specific Advisory Board, Paducah

**AGENCY:** Department of Energy.

**ACTION:** Notice of open meeting.

**SUMMARY:** This notice announces a meeting of the Environmental Management Site-Specific Advisory Board (EMSSAB), Paducah. The Federal Advisory Committee Act (Pub. L. 92–463, 86 Stat. 770) requires that public notice of this meeting be announced in the **Federal Register**.

**DATES:** Thursday, April 21, 2005, 5:30 p.m.–9:30 p.m.

**ADDRESSES:** 111 Memorial Drive, Barkley Centre, Paducah, Kentucky 42001.

**FOR FURTHER INFORMATION CONTACT:** William E. Murphie, Deputy Designated Federal Officer, Department of Energy Portsmouth/Paducah Project Office, 1017 Majestic Drive, Suite 200, Lexington, Kentucky 40513, (859) 219–4001.

**SUPPLEMENTARY INFORMATION:**

*Purpose of the Board:* The purpose of the Board is to make recommendations to DOE in the areas of environmental restoration, waste management and related activities.

*Tentative Agenda*

5:30 p.m.—Informal Discussion
6 p.m.—Call to Order
- Introductions
- Review of Agenda
- Approval of March Minutes

6:05 p.m.—DDFO's Comments
6:25 p.m.—Federal Coordinator Comments
6:30 p.m.—Ex-officio Comments
6:40 p.m.—Public Comments and Questions
6:50 p.m.—Task Forces/Presentations
- Waste Disposition Task Force
- Water Quality Task Force
- Long Range Strategy/Stewardship Task Force

—Chairs Meeting Homework
- Community Outreach Task Force

—Speakers Bureau
7:50 p.m.—Public Comments and Questions
8 p.m.—Break
8:10 p.m.—Administrative Issues
- Review of Work plan
- Review of Next Agenda

8:20 p.m.—Review of Action Items
8:25 p.m.—Subcommittee Reports
- Executive Committee

8:40 p.m.—Final Comments
9:30 p.m.—Adjourn

Copies of the final agenda will be available at the meeting.

*Public Participation:* The meeting is open to the public. Written statements may be filed with the Board either before or after the meeting. Individuals who wish to make oral statements pertaining to agenda items should contact David Dollins at the address listed below or by telephone at (270) 441–6819. Requests must be received five days prior to the meeting and reasonable provision will be made to include the presentation in the agenda. The Deputy Designated Federal Officer is empowered to conduct the meeting in a fashion that will facilitate the orderly conduct of business. Individuals wishing to make public comment will be provided a maximum of five minutes to present their comments.

*Minutes:* The minutes of this meeting will be available for public review and copying at the Freedom of Information Public Reading Room, 1E–190, Forrestal Building, 1000 Independence Avenue, SW., Washington, DC 20585 between 9 a.m. and 4 p.m., Monday–Friday, except Federal holidays. Minutes will also be available at the Department of Energy's Environmental Information Center and Reading Room at 115 Memorial Drive, Barkley Centre, Paducah, Kentucky between 8 a.m. and 5 p.m., on Monday thru Friday or by writing to David Dollins, Department of Energy, Paducah Site Office, Post Office Box 1410, MS–103, Paducah, Kentucky 42001 or by calling him at (270) 441–6819.

Issued at Washington, DC on March 22, 2005.

**Carol Matthews,**

*Acting Advisory Committee Officer.*

[FR Doc. 05–6135 Filed 3–28–05; 8:45 am]

BILLING CODE 6450–01–P

## ENVIRONMENTAL PROTECTION AGENCY

**[FRL–7890–2]**

### Clean Air Act Operating Permit Program; Petitions for Objection to State Operating Permits for Four San Francisco Bay Area Refineries: Chevron Products Company, ConocoPhillips Company, Tesoro Refining and Marketing Co., and Valero Refining Co.

**AGENCY:** Environmental Protection Agency (EPA).

**ACTION:** Notice of final orders on five petitions to object to four state operating permits.

**SUMMARY:** This notice announces that the EPA Administrator has responded to five citizen petitions requesting EPA to object to operating permits issued to four facilities by the Bay Area Air Quality Management District (BAAQMD). The Administrator has (1) denied in full a petition submitted by Plumbers and Steamfitters Union Local 342, Heat and Frost Insulators/Asbestos

Workers Local 16, the International Brotherhood of Electrical Workers Local 302, the Boilermakers Union Local 549 and the Laborers Union Local 324 (Unions) requesting that the Administrator object to the state operating permit issued to Chevron Products Company (Chevron) in Richmond, California; (2) partially granted and partially denied two petitions submitted by Communities for a Better Environment (CBE) requesting that the Administrator object to the state operating permits issued to Chevron in Richmond, California, and ConocoPhillips Company (Conoco) in Rodeo, California; and (3) partially granted and partially denied two petitions submitted by Our Children's Earth Foundation (OCE) requesting that the Administrator object to the state operating permits issued to Tesoro Refining and Marketing Co. (Tesoro) in Martinez, California, and Valero Refining Co. in Benicia, California (Valero).

Pursuant to section 505(b)(2) of the Clean Air Act (Act), the petitioners may seek judicial review of any portion of the petitions which EPA denied in the United States Court of Appeals for the Ninth Circuit. Any petition for review shall be filed within 60 days from the date this notice appears in the **Federal Register**, pursuant to section 307 of the Act.

**ADDRESSES:** Copies of the final orders, petitions, and other supporting information are available at the Environmental Protection Agency, Region IX, Air Division, 75 Hawthorne Street, San Francisco, CA 94105. The final orders are also available electronically at: *http://www.epa.gov/region07/programs/artd/air/title5/petitiondb/petitions.*

**FOR FURTHER INFORMATION CONTACT:** Gerardo Rios, Chief, Air Permits Office, EPA Region IX, telephone (415) 972–3974, e-mail *r9airpermits@epa.gov.*

**SUPPLEMENTARY INFORMATION:** EPA approves state and local permitting authorities to administer the operating permit program set forth in title V of the Clean Air Act, 42 U.S.C. 7661–7661f. BAAQMD administers a fully approved title V operating permit program. The Clean Air Act affords EPA the opportunity for a 45-day period to review, and object to as appropriate, operating permits proposed by permitting authorities. Section 505(b)(2) of the Act authorizes any person to petition the EPA Administrator within 60 days after the expiration of this review period to object to a state operating permit if EPA has not done so. Petitions must be based on objections to the permit that were raised with reasonable specificity during the public comment period provided by the state, unless the petitioner demonstrates that it was impracticable to raise these issues during the comment period or the grounds for the issues arose after this period.

BAAQMD submitted proposed permits to EPA on August 25, 2004 (Chevron and Conoco) and August 26, 2004 (Tesoro and Valero). EPA received five petitions to object to the permits (two petitions for the Chevron permit, and one each for Conoco, Tesoro, and Valero) prior to the deadline for section 505(b)(2) petitions.

On March 15, 2005, the Administrator issued one order denying in full the petition submitted by Unions requesting the Administrator to object to the permit for Chevron; two orders partially granting and partially denying the petitions submitted by CBE requesting the Administrator to object to the permits for Chevron and Conoco; and two orders partially granting and partially denying the petitions submitted by OCE requesting the Administrator to object to the permits for Tesoro and Valero. These orders explain the reasons behind EPA's decisions to grant or deny each issue.

Dated: March 15, 2005.

**Wayne Nastri,**

*Regional Administrator, Region 9.*

[FR Doc. 05–6195 Filed 3–28–05; 8:45 am]

BILLING CODE 6560–50–P

---

## ENVIRONMENTAL PROTECTION AGENCY

**[OW–FRL–7890–5]**

## Beaches Environmental Assessment and Coastal Health Act

**AGENCY:** Environmental Protection Agency (EPA).

**ACTION:** Notice of availability of grants for implementation of coastal recreation water monitoring and public notification under the Beaches Environmental Assessment and Coastal Health Act.

**SUMMARY:** The Beaches Environmental Assessment and Coastal Health (BEACH) Act, signed into law on October 10, 2000, amended the Clean Water Act (CWA), to incorporate provisions to reduce the risk of illness to users of the Nation's recreational waters. Section 406(b) of the CWA, as amended by the BEACH Act, authorizes the U.S. Environmental Protection Agency (EPA) to award program development and implementation grants to eligible States, Territories, Tribes, and local governments to support microbiological testing and monitoring of coastal recreation waters, including the Great Lakes, that are adjacent to beaches or similar points of access used by the public. BEACH Act grants also support development and implementation of programs to notify the public of the potential exposure to disease-causing microorganisms in coastal recreation waters. EPA encourages coastal States and Territories to apply for BEACH Act grants for program implementation (referred to as implementation grants) to implement effective and comprehensive coastal recreation water monitoring and public notification programs. EPA also encourages coastal Tribes to apply for BEACH Act grants for program development (referred to as development grants) to develop effective and comprehensive coastal recreation water monitoring and public notification programs.

**DATES:** States and Territories must submit applications on or before June 27, 2005. Eligible tribes should notify the relevant Regional BEACH Act grant coordinator of their interest in applying on or before June 27, 2005. Upon receipt of a tribe's notice of interest, EPA will establish an appropriate application deadline.

**ADDRESSES:** You must send your application to the appropriate Regional Grant Coordinator listed in this notice under **SUPPLEMENTARY INFORMATION** section VI.

**FOR FURTHER INFORMATION CONTACT:** Rich Healy, 1200 Pennsylvania Ave., NW., (4305T), Washington, DC 20460, (202) 566–0454, *healy.richard@epa.gov.*

**SUPPLEMENTARY INFORMATION:**

### I. Grant Program

*What Is the Statutory Authority for BEACH Act Grants?*

The general statutory authority for BEACH Act grants is section 406(b) of the Clean Water Act, as amended by the BEACH Act, Public Law 106–284, 114 Stat. 970 (2000). It provides: ''The Administrator may make grants to States and local governments to develop and implement programs for monitoring and notification for coastal recreation waters adjacent to beaches or similar points of access that are used by the public.'' CWA section 406(b)(2)(A), however, limits EPA's ability to award implementation grants only to those States, Tribes and Territories that meet certain requirements (see Section II, Funding and Eligibility, below for information on specific requirements).

*What Activities Are Eligible for Funding Under the FY 2005 Grants?*

In fiscal year 2005, EPA intends to award grants authorized under CWA section 406(b) to eligible States and Territories to support the implementation of coastal recreation water monitoring and public notification programs that are consistent with EPA's required performance criteria for implementation grants. Also in fiscal year 2005, EPA intends to award development grants to eligible tribes to support the development of coastal recreation water monitoring and public notification programs that are consistent with EPA's performance criteria for grants. EPA published the required performance criteria for grants in National Beach Guidance and Required Performance Criteria for Grants, (EPA–823–B–02–004), on July 19, 2002. A notice of availability of the document was published in the **Federal Register** (67 FR 47540, July 19, 2002). You can find this document on EPA's Web site at *http://www.epa.gov/waterscience/beaches/grants.* You can also get copies of the document by writing, calling, or e-mailing: Office of Water Resources Center, U.S. Environmental Protection Agency, Mail Code 4100T, 1200 Pennsylvania Avenue, NW., Washington, DC 20460. (Phone: (202) 566–1731 or e-mail: *center.water-resource@epa.gov*).

**II. Funding and Eligibility**

*Who Is Eligible To Apply for These Implementation Grants?*

Coastal and Great Lake States that meet the requirements of CWA section 406(b)(2)(A) are eligible for grants in fiscal year 2005 to implement monitoring and notification programs. The term ''State'' is defined in CWA section 502 to include the District of Columbia, the Commonwealth of Puerto Rico, the Virgin Islands, Guam, American Samoa, the Commonwealth of the Northern Mariana Islands, and the Trust Territory of the Pacific Islands. However, the Trust Territory of the Pacific Islands no longer exists. The Marshall Islands, the Federated States of Micronesia, and Palau, which were previously entities within the Trust Territory of the Pacific Islands, have entered into Compacts of Free Association with the Government of the United States. As a result, each is now a sovereign, self-governing entity and, as such, is no longer eligible to receive grants as a Territory or possession of the United States.

*Are Local Governments Eligible for Funding?*

CWA section 406(b)(2)(B) authorizes EPA to make a grant to a local government for implementation of a monitoring and notification program only if, after the one-year period beginning on the date of publication of the performance criteria (July 19, 2002), EPA determines that the State within which the local government has jurisdiction is not implementing a program that meets the requirements of CWA section 406(b), which includes a requirement that the program is consistent with the performance criteria in National Beach Guidance and Required Performance Criteria for Grants. Therefore, July 19, 2003, was the earliest date that local governments would have been eligible for implementation grants. EPA has not determined that any State is implementing the program inconsistent with the requirements in section 406(b). Local governments may contact their EPA Regional office for further information about BEACH Act grants.

*How May Tribes Apply for BEACH Act Development Grants and How Much Funding Is Available for Tribes?*

Section 518(e) of the CWA authorizes EPA to treat eligible Indian Tribes in the same manner as States for the purpose of receiving CWA section 406 grant funding. For fiscal year 2005, EPA will make $50,000 available for development grants to eligible tribes. In order to be eligible for a CWA section 406 development grant, a tribe must have coastal recreation waters adjacent to beaches or similar points of access that are used by the public. The phrase ''coastal recreation waters'' is defined in CWA section 502(21) to mean the Great Lakes and marine coastal waters (including coastal estuaries) that are designated under CWA section 303(c) for use for swimming, bathing, surfing, or similar water contact activities. The statute explicitly excludes from the definition inland waters and waters upstream of the mouth of a river or stream having an unimpaired natural connection with the open sea. In addition, a tribe must meet the requirements in CWA section 518 for treatment in a manner similar to a State for purposes of receiving a CWA section 406 grant. EPA encourages those tribes with coastal recreation waters to contact their regional Beach Act grant coordinator for further information regarding the application process as soon as possible.

*Are There Any Additional Eligibility Requirements and Grant Conditions Applicable to States, Tribes, and Territories?*

Yes, there are additional eligibility requirements and grant conditions. First, CWA section 406(b)(2)(A) provides that EPA may only award a grant to implement a monitoring and notification program if:

(i) The program is consistent with the performance criteria published by the Administrator under CWA section 406(a);

(ii) The State or local government prioritizes the use of grant funds for particular coastal recreation waters based on the use of the water and the risk to human health presented by pathogens or pathogen indicators;

(iii) The State or local government makes available to the Administrator the factors used to prioritize the use of funds under clause (ii);

(iv) The State or local government provides a list of discrete areas of coastal recreation waters that are subject to the program for monitoring and notification for which the grant is provided that specifies any coastal recreation waters for which fiscal constraints will prevent consistency with the performance criteria under CWA section 406(a); and

(v) The public is provided an opportunity to review the program through a process that provides for public notice and an opportunity for comment.

Second, CWA section 406(c) requires that as a condition of receipt of a CWA section 406 grant, a State or local government program for monitoring and notification must identify:

(1) Lists of coastal recreation waters in the State, including coastal recreation waters adjacent to beaches or similar points of access that are used by the public;

(2) In the case of a State program for monitoring and notification, the process by which the State may delegate to local governments responsibility for implementing the monitoring and notification program;

(3) The frequency and location of monitoring and assessment of coastal recreation waters based on—

(A) The periods of recreational use of the waters;

(B) The nature and extent of use during certain periods;

(C) The proximity of the waters to known point sources and nonpoint sources of pollution; and

(D) Any effect of storm events on the waters;

(4)(A) The methods to be used for detecting levels of pathogens and

pathogen indicators that are harmful to human health; and

(B) The assessment procedures for identifying short-term increases in pathogens and pathogen indicators that are harmful to human health in coastal recreation waters (including increases in relation to storm events);

(5) Measures for prompt communication of the occurrence, nature, location, pollutants involved, and extent of any exceeding of, or likelihood of exceeding, applicable water quality standards for pathogens and pathogen indicators to—

(A) The Administrator, in such form as the Administrator determines to be appropriate; and

(B) A designated official of a local government having jurisdiction over land adjoining the coastal recreation waters for which the failure to meet applicable standards is identified;

(6) Measures for the posting of signs at beaches or similar points of access, or functionally equivalent communication measures that are sufficient to give notice to the public that the coastal recreation waters are not meeting or are not expected to meet applicable water quality standards for pathogens and pathogen indicators; and

(7) Measures that inform the public of the potential risks associated with water contact activities in the coastal recreation waters that do not meet applicable water quality standards.

Third, as required by CWA section 406(b)(3)(A), a State recipient of a CWA section 406 grant must submit to EPA, in such format and at such intervals as EPA determines to be appropriate, a report that describes:

(1) Data collected as part of the program for monitoring and notification as described in section 406(c), and

(2) Actions taken to notify the public when water quality standards are exceeded. In the **Federal Register** notice for fiscal year 2003 grants, EPA established the deadline for States to submit the monitoring report and the notification report for any beach season as January 31st of the year following the beach season (68 FR 15446, 15449 (March 31, 2003)).

Fourth, as required in the **Federal Register** notices for CWA section 406 grants in fiscal years 2003 and 2004, States were required to report to EPA, as a condition of their fiscal year 2003 grants, latitude, longitude and mileage data on:

(1) The extent of beaches and similar points of public access adjacent to coastal recreation waters, and

(2) The extent of beaches that are monitored. (68 FR 15446, 15447) (69 FR 24592, May 4, 2004).

*How Much Funding Is Available?*

For fiscal year 2005,the total available for BEACH Act grants is $9.920 million. EPA expects to award $9.870 million in implementation and development grants to eligible States and Territories. In addition, EPA intends to award $50,000 in development grants to eligible Tribes.

*How Will the Funding for States and Territories Be Allocated?*

EPA expects to award grants to all eligible States and Territories who apply for funding based on an allocation formula that the Agency developed for allocating BEACH Act grant funds in 2002. EPA consulted with various States, the Coastal States Organization, and the Association of State and Interstate Water Pollution Control Administrators (ASIWPCA) to develop this formula. It uses three factors that are readily available and verifiable: (1) beach season length, (2) beach miles, and (3) beach use.

(1) Beach Season Length

EPA selected beach season length as a factor because it determines the part of the year when a government would conduct its monitoring program. The longer the beach season, the more resources a government would need to conduct monitoring. The Agency obtained the information on the length of a beach season from the National Health Protection Survey of Beaches for the States or Territories that submitted a completed survey. EPA estimated the beach season length for American Samoa, Oregon, Puerto Rico, and Northern Mariana Islands based on the season reported by nearby States and Territories. EPA estimated the beach season length for Alaska based on air and water temperature, available information on recreation activities, and data from the 1993 National Water Based Recreation Survey. EPA grouped the States and U.S. Territories into four categories of beach season lengths:

| For beaches in: | The beach season category is: |
|---|---|
| Alaska | < 3 months. |
| Connecticut, Delaware, Illinois, Indiana, Maine, Maryland, Massachusetts, Michigan, Minnesota, New Hampshire, New Jersey, New York, Ohio, Oregon, Pennsylvania, Rhode Island, months Virginia, Washington, Wisconsin. | 3–4 months. |
| Alabama, Georgia, Louisiana, Mississippi, North Carolina, South Carolina. | 5–6 months. |
| American Samoa, California, Florida, Guam, Hawaii, Northern Mariana, Puerto Rico, Texas, U.S. Virgin Islands. | 9–12 months. |

(2) Beach Miles

EPA selected miles of beach as a factor because it determines the geographical extent over which a government would conduct monitoring. The more miles of beaches, the more resources a government would need to conduct monitoring. EPA does not have complete and verified beach mileage data at this time. Therefore, in the interim, EPA is using shoreline miles as a surrogate for beach miles in the allocation formula. Shoreline miles data overestimates beach miles in some States and Territories; however, EPA and States agreed that this is the best beach estimate available at this time. EPA used the National Oceanic and Atmospheric Administration (NOAA) publication, The Coastline of the United States, to quantify shoreline miles. Next year, EPA intends to use beach miles (reported by States and Territories) rather than shoreline miles. EPA will also use beach miles information to periodically update the CWA section 406(g) list (also known as the National List of Beaches—document number, EPA–823–R–04–004).

(3) Beach Use

EPA selected beach use as a factor because it reflects the importance of beach-related tourism to the local economy. Greater use of beaches makes it more likely that a government would need to conduct monitoring more frequently due to the larger number of people that might be exposed to pathogens. EPA continues to use the coastal population of counties (based on the 2000 Census data) to quantify the coastal population that is wholly or partially within the State's or Territory's legally defined coastal zone, as a surrogate for actual beach usage.

The grants allocation formula sums three parts. The first part is a base amount for all States and Territories that varies with the length of the beach season. The second part distributes 50% of the total remaining funds based on the ratio of shoreline miles in a State or Territory to the total length of shoreline miles. For example, if a State has 4% of the total coastal and Great Lakes shoreline, that State would receive 4% of 50% or 2% of total funds remaining after the Agency distributed the funds for part one. The third part distributes

the remaining 50% based on the ratio of coastal population in a State or Territory to the total coastal population. For example, if a State has 2% of the total coastal and Great Lakes population, that State would receive 2% of 50% or 1% of the total funds remaining after the Agency distributes the funds for the first two parts. The following table summarizes the allocation formula:

| For the factor: | The part of the allocation is: |
|---|---|
| Beach season length. | < 3 months: $150,000 (States and Territories with a season <3 months receive season-based funding only.)<br>3–4 months: $200,000.<br>5–6 months: $250,000.<br>>6 months: $300,000. |
| Shoreline miles. | 50% of funds remaining after allocation of season-based funding. |
| Coastal population. | 50% of funds remaining after allocation of season-based funding. |

For 2005, the total available for BEACH Act grants to States and Territories is $9.870 million. Assuming all 35 States and Territories with coastal recreation waters apply and meet the statutory eligibility requirements for implementation grants (and have met the statutory grant conditions applicable to previously awarded section 406 grants), the distribution of the funds for year 2005 would be:

| For the State or territory of: | The year 2005 allocation is: |
|---|---|
| Alabama | $262,650 |
| Alaska | 150,000 |
| American Samoa | 302,230 |
| California | 525,460 |
| Connecticut | 224,290 |
| Delaware | 211,170 |
| Florida | 537,390 |
| Georgia | 287,620 |
| Guam | 302,710 |
| Hawaii | 323,930 |
| Illinois | 244,630 |
| Indiana | 206,030 |
| Louisiana | 326,780 |
| Maine | 256,880 |
| Maryland | 271,970 |
| Massachusetts | 256,580 |
| Michigan | 281,530 |
| Minnesota | 204,440 |
| Mississippi | 257,810 |
| New Hampshire | 204,710 |
| New Jersey | 280,780 |
| New York | 354,580 |
| North Carolina | 304,540 |
| Northern Mariana | 303,470 |
| Ohio | 224,580 |
| Oregon | 229,910 |
| Pennsylvania | 223,410 |
| Puerto Rico | 329,570 |
| Rhode Island | 213,140 |
| South Carolina | 298,490 |
| Texas | 386,150 |
| U.S. Virgin Islands | 303,310 |
| Virginia | 279,920 |
| Washington | 273,080 |
| Wisconsin | 226,260 |

EPA expects that all 35 States and Territories will apply. If fewer than 35 States and Territories apply for the allocated amount, or if any applicant fails to meet the statutory eligibility requirements (or the statutory conditions applicable to previously awarded section 406 grants), then EPA will distribute available grant funds to eligible States and Territories in the following order:

(1) States that meet the eligibility requirements for implementation grants and that have met the statutory conditions applicable to previously awarded section 406 grants will be awarded the full amount of funds allocated to the State under the formula described above.

(2) States that have not met the requirements for implementation grants but have met the statutory requirements and grant conditions applicable to previously awarded section 406 grants may receive grants for continued program development. Any program development grants that the Agency awards will be for the limited purpose of completing work needed to qualify for implementation grants. Therefore, we expect that funding levels for continued program development grants will be lower than the amount allocated for program implementation grants.

(3) EPA may award program implementation grants to local governments in States that the Agency determines have not met the requirements for implementation grants.

(4) Should there be any remaining funds, EPA may award these funds to those States that have met the statutory requirements for implementation grants, as well as the statutory grant conditions of previous section 406 grants, using the criteria in the allocation formula.

*How Will the Funding for Tribes Be Allocated?*

EPA expects to apportion the funds set aside for tribal grants evenly among all eligible tribes that apply for funding.

**What Is the Expected Duration of Funding and Projects?**

The expected funding and project period for implementation grants awarded in fiscal year 2005 is one year.

*Does EPA Require Matching Funds?*

Recipients do not have to provide matching funds for these Implementation Grants. EPA may establish a match requirement in the future based on a review of State program activity and funding levels.

**What If a State Cannot Use All of Its Allocation?**

If a State, Tribe, or Territory cannot use all of its allocation, the Regional Administrator may award the unused funds to any eligible coastal or Great Lake grant recipient in the Region for the continued development or implementation of their coastal recreation water monitoring and notification program(s). If, after re-allocations, there are still unused funds within the Region, EPA Headquarters will redistribute these funds to any eligible coastal or Great Lake grant recipient.

**III. Eligible Activities**

Recipients of implementation grants may use funds for activities to support implementing a beach monitoring and notification program that is consistent with the required performance criteria for grants specified in the document, *National Beach Guidance and Required Performance Criteria for Grants*, (document number: EPA–823–B–02–004). Recipients of development grants may use the funds to develop a beach monitoring and notification program consistent with the performance criteria.

**IV. Selection Process**

EPA Regional offices will award CWA section 406 grants through a non-competitive process. EPA expects to award grants to all eligible State, Tribe, and Territory applicants that meet the applicable requirements described in this notice.

*Who Has the Authority To Award BEACH Act Grants?*

The Administrator has delegated the authority to award BEACH Act grants to the Regional Administrators.

**V. Application Procedure**

*What Is the Catalog of Federal Domestic Assistance (CFDA) Number for the BEACH Monitoring and Notification Program Implementation Grants?*

The number assigned to the BEACH Act Grants is 66.472, Program Code CU.

*Can BEACH Act Grant Funds Be Included in a Performance Partnership Grant?*

For fiscal year 2005, BEACH Act Grants cannot be included in a Performance Partnership Grant.

*What Is the Application Process for States and Territories?*

Your application package should contain completed:

- EPA SF–424 Application for Federal Assistance
- Program Summary
- Data Submission Plan, and

In order for EPA to determine that a State or local government is eligible for an implementation grant, the applicant must submit documentation with its application to demonstrate that its program is consistent with the performance criteria. The Program Summary must contain sufficient technical detail for EPA to confirm that your program meets the statutory eligibility requirements and statutory grant conditions for previously awarded CWA section 406 grants listed in section II (Funding and Eligibility) of this notice. The Program Summary must also describe how the State used BEACH Act Grant funds to develop the beach monitoring and notification program, and how the program has met the nine performance criteria in *National Beach Guidance and Required Performance Criteria for Grants*, (EPA–823–B–02–004). The Program Summary should also describe your program's objectives for the next year.

The Data Submission Plan describes the State data infrastructure and how the State plans to submit beach monitoring and notification data to EPA. For those States who have already submitted their Data Submission Plan, updates and amendments to the Plan may be submitted. More information on both the Program Summary and Data Submission Plan is available at *http://www.epa.gov/waterscience/beaches/grants/.*

States and territories must submit application packages to the appropriate EPA Regional Office by June 27, 2005. EPA will make an award after the Agency reviews the documentation and confirms that the program meets the applicable requirements. The Office of Management and Budget has authorized EPA to collect this information (BEACH Act Grant Information Collection Request, OMB control number 2040–0244). Please contact the appropriate EPA Regional Office for a complete application package. See Section VI for a list of EPA Regional Grant Coordinators or visit the EPA Beach Watch Web site at *http://www.epa.gov/waterscience/beaches/contact.html* on the Internet.

*What Should a Tribe's Notice of Interest Contain?*

The Notice of Intent should include the tribe's name and the name and telephone number of a contact person.

*Are Quality Assurance and Quality Control (QA/QC) Required for Application?*

Yes. Three specific QA/QC requirements must be met to comply with EPA's performance criteria for grants:

(1) Applicants must submit documentation that describes the quality system implemented by the State, Tribe, or local government. Documentation may be in the form of a Quality Management Plan or equivalent documentation.

(2) Applicants must submit a quality assurance project plan (QAPP) or equivalent documentation.

(3) Applicants are responsible for submitting documentation of the quality system and QAPP for review and approval by the EPA Quality Assurance Officer or his designee before they take primary or secondary environmental measurements. More information about the required QA/QC procedures is available in Chapter Four and Appendix H of *National Beach Guidance and Required Performance Criteria for Grants* (EPA–823–B–02–004).

*Are There Reporting Requirements?*

Recipients must submit annual performance reports and financial reports as required in 40 CFR 31.40 and 31.41. The annual performance report explains changes to the beach monitoring and notification program during the grant year. It also describes how the grant funds were used to implement the program to meet the performance criteria listed in *National Beach Guidance and Required Performance Criteria for Grants* (EPA–823–B–02–004). The annual performance report required under 40 CFR 31.40 is due no later than 90 days after the grant year. Recipients must also submit annual monitoring and notification reports required under by the *National Beach Guidance and Required Performance Criteria for Grants*; (EPA–823–B–02–004). Sections 2.2.3 and 4.3 of the document contain the performance criterion requiring an annual monitoring report, and sections 2.2.8 and 5.4 contain the performance criterion requiring an annual notification report. The required monitoring and notification data are described at *http://www.epa.gov/waterscience/beaches/grants/*. These reports, required to be submitted to EPA by States, Tribes and Territories under CWA section 406(b)(3)(A), include data collected as part of a monitoring and notification program. As a condition of award of an implementation grant, EPA requires that the monitoring report and the notification report for any beach season be submitted not later than January 31 of the year following the beach season. (See section II, Funding and Eligibility, above.)

*What Regulations and OMB Cost Circular Apply to the Award and Administration of These Grants?*

The regulations at 40 CFR part 31 govern the award and administration of grants to States, tribes, local governments, and Territories under CWA sections 406(b). Allowable costs will be determined according to the cost principles outlined in OMB Cost Circular A–87.

**VI. Grant Coordinators**

*Headquarters—Washington, DC*

Rich Healy USEPA, 1200 Pennsylvania Ave., NW.—4305, Washington, DC 20460; T: (202) 566–0405; F: (202) 566–0409; *healy.richard@epa.gov.*

*Region I—Connecticut, Maine, Massachusetts, New Hampshire, Rhode Island*

Matt Liebman USEPA Region I, One Congress Street, Ste. 1100—CWQ, Boston, MA 02114–2023; T: (617) 918–1626; F: (617) 918–1505; *liebman.matt@epa.gov.*

*Region II—New Jersey, New York, Puerto Rico, U.S. Virgin Islands*

Helen Grebe USEPA Region II, 2890 Woodbridge Avenue, MS220, Edison, NJ 08837–3679; T: (732) 321–6797; F: (732) 321–6616; *grebe.helen@epa.gov.*

*Region III—Delaware, Maryland, Pennsylvania, Virginia*

Tiffany Crawford USEPA Region III, 1650 Arch Street 3ES10, Philadelphia, PA 19103–2029; T: (215) 814–5776; F: (215) 814–2301; *crawford.tiffany@epa.gov.*

*Region IV—Alabama, Florida, Georgia, Mississippi, North Carolina, South Carolina*

Joel Hansel USEPA Region IV, 61 Forsyth Street, 15th Floor, Atlanta, GA 30303–3415; T: (404) 562–9274; F: (404) 562–9224; *hansel.joel@epa.gov.*

*Region V—Illinois, Indiana, Michigan, Minnesota, Ohio, Wisconsin*

Holly Wirick USEPA Region V, 77 West Jackson Boulevard, WT–16J, Chicago, IL 60604–3507; T: (312) 353–6704; F:

(312) 886–0168; *wirick.holiday@epa.gov.*

*Region VI—Louisiana, Texas*

Mike Schaub USEPA Region VI, 1445 Ross Avenue, 6WQ–EW, Dallas, TX 75202–2733; T: (214) 665–7314; F: (214) 665–6689; *schaub.mike@epa.gov.*

*Region IX—American Soma, Commonwealth of the Northern Mariana Islands, California, Guam, Hawaii*

Terry Fleming USEPA Region IX, 75 Hawthorne Street WTR–2, San Francisco, CA 94105; T: (415) 972–3462; F: (415) 947–3537; *fleming.terrence@epa.gov.*

*Region X—Alaska, Oregon, Washington*

Rob Pedersen USEPA Region X, 120 Sixth Avenue, OW–134, Seattle, WA 98101; T: (206) 553–1646; F: (206) 553–0165; *pedersen.rob@epa.gov.*

Dated: March 15, 2005.

**Benjamin H. Grumbles,**

*Assistant Administrator of Water.*

[FR Doc. 05–6194 Filed 3–28–05; 8:45 am]

BILLING CODE 6560–50–P

## ENVIRONMENTAL PROTECTION AGENCY

**[FRL–7890–7]**

## Science Advisory Board Staff Office; Notification of an Upcoming Meeting of the Science Advisory Board Ecological Processes and Effects Committee

**AGENCY:** Environmental Protection Agency (EPA).

**ACTION:** Notice.

**SUMMARY:** The EPA Science Advisory Board (SAB) Staff Office announces a public teleconference of the SAB Ecological Processes and Effects Committee.

**DATES:** April 21, 2005. The public teleconference will be held on April 21, 2005, from 12 p.m. to 2 p.m. (eastern time).

**FOR FURTHER INFORMATION CONTACT:** Any member of the Public wishing to obtain the teleconference call-in number and access code to participate in the teleconference may contact Dr. Thomas Armitage, Designated Federal Officer (DFO), U.S. EPA Science Advisory Board by telephone/voice mail at (202) 343–9995, or via e-mail at *armitage.thomas@epa.gov*. The SAB Mailing address is: U.S. EPA, Science Advisory Board (1400F), 1200 Pennsylvania Avenue, NW., Washington, DC 20460. General information about the SAB may be found in the SAB Web site at *http://www.epa.gov/sab*.

**SUPPLEMENTARY INFORMATION:** *Background:* Ecological risk assessments have been conducted since the 1980's, and EPA's Guidelines for Ecological Risk Assessment (document number: EPA/630/R095/002F available at *http://cfpub.epa.gov/ncea/cfm/recordisplay.cfm?deid=12460*) were published in 1998. Since 1998, the practice of ecological risk assessment has continued to advance. The SAB Ecological Processes and Effects Committee (EPEC) has proposed a project to evaluate the current state of the practice of ecological risk assessment. The proposed project is intended to address scientific aspects of ecological risk assessment including, but not limited to, approaches for toxic chemicals, habitat modification, multiple stressors, and landscape level assessments. The EPEC will meet by teleconference to discuss the proposed project. The teleconference agenda will be posted on the SAB website prior to the teleconference.

*Procedures for Providing Public Comment:* It is the policy of the EPA Science Advisory Board (SAB) Staff Office to accept written public comments of any length, and to accommodate oral public comments whenever possible. The EPA SAB Staff Office expects that public statements presented at the Ecological Processes and Effects Committee teleconference will not be repetitive of previously submitted oral or written statements. *Oral Comments:* In general, each individual or group requesting an oral presentation at a conference call meeting will be limited to no more than three minutes per speaker and no more than fifteen minutes total. Interested parties should contact the DFO in writing via e-mail at least one week prior to the teleconference in order to be placed on the public speaker list. *Written Comments:* Although written comments are accepted until the date of the teleconference (unless otherwise stated), written comments should be received in the SAB Staff Office at least one week prior to the teleconference date so that the comments may be made available to the committee or panel for their consideration. Comments should be supplied to the DFO at the address/contact information above in the following formats: one hard copy with original signature, and one electronic copy via e-mail (acceptable file format: Adobe Acrobat, WordPerfect, Word, or Rich Text files (in IBM–PC/Windows 98/2000/XP format).

*Meeting Accommodations:* Individuals requiring special accommodation to access the teleconference, should contact the relevant DFO at least five business days prior to the meeting so that appropriate arrangements can be made.

Dated: March 22, 2005.

**Vanessa T. Vu,**

*Director, EPA Science Advisory Board Staff Office.*

[FR Doc. 05–6192 Filed 3–28–05; 8:45 am]

BILLING CODE 6560–50–P

## ENVIRONMENTAL PROTECTION AGENCY

**[FRL–7890–6]**

## Science Advisory Board Staff Office; Notification of Upcoming Teleconferences of the Advisory Council on Clean Air Compliance Analysis and its Ecological Effects Subcommittee

**AGENCY:** Environmental Protection Agency (EPA).

**ACTION:** Notice.

**SUMMARY:** The EPA Science Advisory Board (SAB) Staff Office announces a public teleconference of the Ecological Effects Subcommittee (EES) of the Advisory Council on Clean Air Compliance Analysis (Council). The EES will meet to discuss its draft advisory report in response to EPA's charge questions related to the Agency's Benefits and Costs of the Clean Air Act, Revised Analytic Plan for EPA's Second Prospective Analysis, 1990–2020. The chartered Council will subsequently meet to review the draft advisory of the EES and consider it for approval and transmittal to the EPA Administrator.

**DATES:** The public teleconference of the Council EES will be held on April 14, 2005 from 2 p.m. to 4 p.m. (eastern time). The public teleconference of the Council will be held on May 24, 2005 from 2 p.m. to 4 p.m. (eastern time).

**FOR FURTHER INFORMATION CONTACT:** Members of the public who wish to obtain the call-in number or access code or submit written or brief oral comments (three minutes or less) must contact Dr. Holly Stallworth, Designated Federal Officer, at telephone/voice mail: (202) 343–9867 or via e-mail at: *stallworth.holly@epa.gov*. Any member of the public wishing further information regarding the SAB or the Council EES may also contact Dr. Stallworth, or visit the SAB Web site at: *http://www.epa.gov/sab*.

**SUPPLEMENTARY INFORMATION:** *Background:* EPA's Office of Air and

Radiation (OAR) conducts periodic, scientifically reviewed studies to assess the costs and benefits of regulations promulgated under the Clean Air Act. The Council is chartered to provide advice on EPA's methods and analyses. The EES is one of the Council's three subcommittees and was formed after a ''widecast'' was published in a **Federal Register** Notice on September 9, 2003 (68 FR 53162–53164). Additional information on the EES and its advisory activity was provided in a Notice published on October 14, 2004 (69 FR 60996). Updated information on the current work of the EES was provided on November 26, 2004 (29 FR 68901).

EPA has thus far issued one retrospective analysis of the Clean Air Act covering the 1970–1990 time period and one prospective analysis covering the 1990–2010 time period. EPA is planning a second prospective analysis covering the 1990–2020 time period and has issued two analytic blueprints for this analysis. The Council provided advice on these analytic blueprints in 2001 (*http://www.epa.gov/sab/pdf/councila01004.pdf*) and 2004 (*http://www.epa.gov/sab/pdf/council_adv_04004.pdf*) but deferred three charge questions pertaining to ecological effects to the EES. The EES has responded to these three charge questions in a Draft Advisory at *http://www.epa.gov/sab/panels/sba_adv_panel.htm*.

The April 14 teleconference will provide the EES an opportunity to finalize its Draft Advisory. The May 24 teleconference will provide the Council an opportunity to review the EES Draft Advisory and consider it for approval and transmittal to the EPA Administrator.

Meeting agendas for both teleconferences will be posted on the SAB Web site prior to each meeting.

*Procedures for Providing Public Comment.* It is the policy of the EPA Science Advisory Board (SAB) Staff Office to accept written public comments of any length, and to accommodate oral public comments whenever possible. The EPA SAB Staff Office expects that public statements presented at any teleconference or meeting will not be repetitive of previously submitted oral or written statements. *Oral Comments:* Requests to provide oral comments must be in writing (e-mail, fax or mail) and received by Dr. Stallworth no later than five business days prior to the teleconference in order to reserve time on the meeting agenda. For teleconferences, opportunities for oral comment will usually be limited to no more than five minutes per speaker and no more than fifteen minutes total. *Written Comments:* Although written comments are accepted until the date of the meeting (unless otherwise stated), written comments should be received in the SAB Staff Office at least five business days prior to the meeting date so that the comments may be made available to the committee for their consideration. Comments should be supplied to the DFO at the address/contact information noted above in the following formats: one hard copy with original signature, and one electronic copy via e-mail (acceptable file format: Adobe Acrobat, WordPerfect, Word, or Rich Text files (in IBM–PC/Windows 95/98 format).

Dated: March 22, 2005.

**Vanessa T. Vu,**

*Director, EPA Science Advisory Board Staff Office.*

[FR Doc. 05–6193 Filed 3–28–05; 8:45 am]

**BILLING CODE 6560–50–P**

---

## FEDERAL COMMUNICATIONS COMMISSION

### Notice of Public Information Collection(s) Being Reviewed by the Federal Communications Commission, Comments Requested

March 24, 2005.

**SUMMARY:** The Federal Communications Commission, as part of its continuing effort to reduce paperwork burden invites the general public and other Federal agencies to take this opportunity to comment on the following information collection(s), as required by the Paperwork Reduction Act (PRA) of 1995, Pub. L. 104–13. An agency may not conduct or sponsor a collection of information unless it displays a currently valid control number. No person shall be subject to any penalty for failing to comply with a collection of information subject to the Paperwork Reduction Act that does not display a valid control number. Comments are requested concerning (a) Whether the proposed collection of information is necessary for the proper performance of the functions of the Commission, including whether the information shall have practical utility; (b) the accuracy of the Commission's burden estimate; (c) ways to enhance the quality, utility, and clarity of the information collected; and (d) ways to minimize the burden of the collection of information on the respondents, including the use of automated collection techniques or other forms of information technology.

**DATES:** Written Paperwork Reduction Act (PRA) comments should be submitted on or before May 31, 2005. If you anticipate that you will be submitting comments, but find it difficult to do so within the period of time allowed by this notice, you should advise the contact listed below as soon as possible.

**ADDRESSES:** Direct all Paperwork Reduction Act (PRA) comments to Cathy Williams, Federal Communications Commission, Room 1–C823, 445 12th Street, SW., Washington, DC 20554 or via the Internet to *Cathy.Williams@fcc.gov.*

**FOR FURTHER INFORMATION CONTACT:** For additional information or copies of the information collection(s), contact Cathy Williams at (202) 418–2918 or via the Internet at *Cathy.Williams@fcc.gov.*

**SUPPLEMENTARY INFORMATION:**

*OMB Control Number:* 3060–0419.

*Title:* Section 76.94, Notification; Section 76.95, Exceptions; Section 76.105, Notifications; Section 76.106, Exceptions; Section 76.107, Exclusivity Contracts; Section 76.109, Requirements for Invocation of Protection; and Section 76.1609, Non-Duplication and Syndicated Exclusivity.

*Form Number:* Not applicable.

*Type of Review:* Extension of a currently approved collection.

*Respondents:* Business or other for-profit entities.

*Number of Respondents:* 5,555.

*Estimated Time per Response:* 30 minutes—2 hours.

*Frequency of Response:* One time requirement; Third party disclosure requirement.

*Total Annual Burden:* 182,552 hours.

*Total Annual Cost:* None.

*Privacy Impact Assessment:* No impact(s).

*Needs and Uses:* FCC Rules under 47 CFR sections 76.94, 76.95, 76.105, 76.106, 76.107, 76.109 and 76.1609, require, among other things, that television stations, broadcast television stations, and program distributors notify cable system operators of non-duplication protection and exclusivity rights being sought within prescribed limitations and terms of contractual agreements. The various notification and disclosure requirements protect broadcasters that purchase the exclusive rights to transmit syndicated programming in their recognized markets.

Federal Communications Commission.

**Marlene H. Dortch,**

*Secretary.*

[FR Doc. 05–6173 Filed 3–28–05; 8:45 am]

**BILLING CODE 6712–10–P**

## FEDERAL COMMUNICATIONS COMMISSION

### Notice of Public Information Collection(s) Being Reviewed by the Federal Communications Commission for Extension Under Delegated Authority

March 22, 2005.

**SUMMARY:** The Federal Communications Commission, as part of its continuing effort to reduce paperwork burden invites the general public and other Federal agencies to take this opportunity to comment on the following information collection(s), as required by the Paperwork Reduction Act of 1995, Pub. L. 104–13. An agency may not conduct or sponsor a collection of information unless it displays a currently valid control number. No person shall be subject to any penalty for failing to comply with a collection of information subject to the Paperwork Reduction Act (PRA) that does not display a valid control number. Comments are requested concerning (a) Whether the proposed collection of information is necessary for the proper performance of the functions of the Commission, including whether the information shall have practical utility; (b) the accuracy of the Commission's burden estimate; (c) ways to enhance the quality, utility, and clarity of the information collected; and (d) ways to minimize the burden of the collection of information on the respondents, including the use of automated collection techniques or other forms of information technology.

**DATES:** Written Paperwork Reduction Act (PRA) comments should be submitted on or before May 31, 2005. If you anticipate that you will be submitting comments, but find it difficult to do so within the period of time allowed by this notice, you should advise the contact listed below as soon as possible.

**ADDRESSES:** Direct all Paperwork Reduction Act (PRA) comments to Les Smith, Federal Communications Commission, 445 12th Street, SW., Room 1–A804, Washington, DC 20554 or via the Internet to *Leslie.Smith@fcc.gov.*

**FOR FURTHER INFORMATION CONTACT:** For additional information or copies of the information collections contact Les Smith at (202) 418–0217 or via the Internet at *Leslie.Smith@fcc.gov.*

**SUPPLEMENTARY INFORMATION:**

*OMB Control Number:* 3060–0862.

*Title:* Handling Confidential Information.

*Form Number:* N/A.

*Type of Review:* Extension of a currently approved collection.

*Respondents:* Business or other for-profit entities; Not-for-profit institutions; Federal Government; and State, local, or tribal government.

*Number of Respondents:* 600.

*Estimated Time per Response:* 1 to 3 hours.

*Frequency of Response:* Recordkeeping; On occasion reporting requirement; Third party disclosure.

*Total Annual Burden:* 800 hours.

*Total Annual Cost:* None.

*Privacy Impact Assessment:* N/A.

*Needs and Uses:* On August 4, 1998, the FCC released a *Report and Order* (R&O), Examination of Current Policy Concerning the Treatment of Confidential Information Submitted to the Commission, CG Docket No. 96–55. The R&O included a Model Protective Order (MPO) that is used, when appropriate, to grant limited access to information that the Commission determines should not be routinely available for public inspection. The party granted access to the confidential information materials must keep a written record of all copies made and provide this record to the submitter of the confidential materials upon request. This approach was adopted to facilitate the use of confidential materials under an MPO, instead of restricting access to materials. In addition, the FCC amended 47 CFR 0.459(b) to set forth the type of information that should be included when a party submits information to the Commission for which it seeks confidential treatment. This listing of types of information to be submitted was adopted to provide guidance to the public for confidentiality requests.

Federal Communications Commission.

**Marlene H. Dortch,**

*Secretary.*

[FR Doc. 05–6174 Filed 3–28–05; 8:45 am]

BILLING CODE 6712–01–P

## FEDERAL DEPOSIT INSURANCE CORPORATON

### Agency Information Collection Activities: Revision of an Information Collection; Comment Request

**AGENCY:** Federal Deposit Insurance Corporation (FDIC).

**ACTION:** Notice and request for comment.

**SUMMARY:** The FDIC, as part of its continuing effort to reduce paperwork and respondent burden, invites the general public and other Federal agencies to comment on the proposed revision of an information collection, as required by the Paperwork Reduction Act (PRA, 44 U.S.C. chapter 35). Currently, the FDIC is soliciting comments concerning an information collection titled ''Account Based Disclosures in Connection with Federal Reserve Regulations E, CC and DD.''

**DATES:** Comments must be submitted on or before March 31, 2005.

**ADDRESSES:** Interested parties are invited to submit written comments to Thomas Nixon, Legal Division, Federal Deposit Insurance Corporation, 550 17th Street, NW., Washington, DC 20429. All comments should refer to ''Account Based Disclosures in Connection with Federal Reserve Regulations E, CC, and DD.'' Comments may be hand-delivered to the guard station at the rear of the 17th Street Building (located on F Street), on business days between 7 a.m. and 5 p.m. Comments may also be submitted to the OMB desk officer for the FDIC: Mark Menchik, Office of Information and Regulatory Affairs, Office of Management and Budget, New Executive Office Building, Washington, DC 20503.

**FOR FURTHER INFORMATION CONTACT:** Thomas Nixon, (202) 898–8766, or at the address above.

**SUPPLEMENTARY INFORMATION:** Proposal to revise the following currently approved collection of information:

*Title:* Account Based Disclosures in Connection with Federal Reserve Regulations E, CC, and DD.

*OMB Number:* 3064–0084.

*Affected Public:* State chartered banks that are not members of the Federal Reserve System.

*Information about the Collection and Proposed Changes to it:* This FDIC information collection provides for the application of Regulations E (Electronic Fund Transfers), CC (Availability of Funds), and DD (Truth in Savings) to state nonmember banks. Regulations E, CC, and DD are issued by the Federal Reserve Board of Governors (FRB) to ensure, among other things, that consumers are provided adequate disclosures regarding accounts, including electronic fund transfer services, availability of funds, and fees and annual percentage yield for deposit accounts. The FDIC is providing this notice in order to keep its Office of Management and Budget (OMB) approved information collection consistent with changes the FRB proposed to Regulation E, 12 CFR part 205, (69 FR 55996, Sept. 17, 2004). Currently, Regulation E requires respondents to provide disclosures of basic terms, costs, and rights relating to electronic fund transfer services.

If the proposed changes to Regulation E are made final, state nonmember banks will need to modify their Regulation E disclosures to provide initial disclosures that electronic check conversion transactions are a new type of transfer that can be made from a consumer's account. The FDIC estimates that it will require institutions, on average, one business day to reprogram and update systems to include the new notice concerning electronic check conversion disclosure to their ongoing Regulation E disclosure requirements. The one-time burden would be 42,400 hours (8 hours × 5,300 respondents).

If the proposed changes to Regulation E are made final, institutions involved in offering payroll card accounts will be required to ensure compliance with Regulation E and provide disclosure of basic terms, costs, and rights relating to electronic fund transfer services in connection with the payroll card account. Certain information must be disclosed to consumers, including: initial and updated electronic fund transfer terms, transaction information, periodic statements of activity, the consumer's potential liability for unauthorized transfers, and error resolution rights and procedures. The disclosures are standardized and machine-generated and do not substantively change from one individual account to another; thus, the average time for providing the disclosure to all consumers should be minimal.

The FDIC estimates that five state nonmember banks participate in payroll card account programs and that each institution will make approximately 5,000 disclosures which will require an average of 1.5 minutes per disclosure to prepare and distribute, resulting in 625 hours of annual burden. The FDIC estimates that the five institutions will take, on average, 7 hours to prepare and distribute 12 periodic statements for an annual burden of 420 hours. The FDIC estimates that the five respondents will take, on average, 30 minutes for eight error resolution procedures for a total of 20 hours. The payroll card account disclosures would add 1,065 hours of ongoing burden to the current annual Regulation E burden of 28,930 hours.

At this time, the FDIC does not believe that any state nonmember banks are engaged in electronic check conversion transactions as a merchant or payee. The FDIC is not proposing to make any changes to the Regulation CC or DD parts of the OMB approved information collection. The FDIC's burden estimate is based on the FRB's proposed rule; we will adjust it as necessary to make it consistent with the FRB's final rule.

**Request for Comment**

Comments are invited on: (a) Whether the collection of information is necessary for the proper performance of the FDIC's functions, including whether the information has practical utility; (b) the accuracy of the estimates of the burden of the information collection, including the validity of the methodology and assumptions used; (c) ways to enhance the quality, utility, and clarity of the information to be collected; and (d) ways to minimize the burden of the information collection on respondents, including through the use of automated collection techniques or other forms of information technology.

At the end of the comment period, the comments and recommendations received will be analyzed to determine the extent to which the collection should be modified prior to submission to OMB for review and approval. Comments submitted in response to this notice also will be summarized or included in the FDIC's request to OMB for renewal of this collection. All comments will become a matter of public record.

Dated in Washington, DC, this 22nd day of March, 2005.

Federal Deposit Insurance Corporation.

**Robert E. Feldman,**

*Executive Secretary.*

[FR Doc. 05–6121 Filed 3–28–05; 8:45 am]

BILLING CODE 6714–01–P

## FEDERAL RESERVE SYSTEM

### Formations of, Acquisitions by, and Mergers of Bank Holding Companies

The companies listed in this notice have applied to the Board for approval, pursuant to the Bank Holding Company Act of 1956 (12 U.S.C. 1841 *et seq.*) (BHC Act), Regulation Y (12 CFR Part 225), and all other applicable statutes and regulations to become a bank holding company and/or to acquire the assets or the ownership of, control of, or the power to vote shares of a bank or bank holding company and all of the banks and nonbanking companies owned by the bank holding company, including the companies listed below.

The applications listed below, as well as other related filings required by the Board, are available for immediate inspection at the Federal Reserve Bank indicated. The application also will be available for inspection at the offices of the Board of Governors. Interested persons may express their views in writing on the standards enumerated in the BHC Act (12 U.S.C. 1842(c)). If the proposal also involves the acquisition of a nonbanking company, the review also includes whether the acquisition of the nonbanking company complies with the standards in section 4 of the BHC Act (12 U.S.C. 1843). Unless otherwise noted, nonbanking activities will be conducted throughout the United States. Additional information on all bank holding companies may be obtained from the National Information Center website at *www.ffiec.gov/nic/*.

Unless otherwise noted, comments regarding each of these applications must be received at the Reserve Bank indicated or the offices of the Board of Governors not later than April 22, 2005.

**A. Federal Reserve Bank of Atlanta** (Andre Anderson, Vice President) 1000 Peachtree Street, N.E., Atlanta, Georgia 30303:

*1. Hometown Community Bancshares, Inc.*, Braselton, Georgia; to become a bank holding company by acquiring 100 percent of the voting shares of Hometown Community Bank of Georgia (in organization), Braselton, Georgia.

**B. Federal Reserve Bank of Minneapolis** (Jacqueline G. Nicholas, Community Affairs Officer) 90 Hennepin Avenue, Minneapolis, Minnesota 55480-0291:

*1. Deerwood Bancshares, Inc.*, Deerwood, Minnesota; to merge with Northome Bancshares, Inc., Northome, Minnesota, and thereby indirectly acquire Northland Community Bank, Northome, Minnesota.

Board of Governors of the Federal Reserve System, March 23, 2005.

**Robert deV. Frierson,**

*Deputy Secretary of the Board.*

[FR Doc. 05–6102 Filed 3–28–05; 8:45 am]

BILLING CODE 6210–01–S

## FEDERAL RESERVE SYSTEM

### Formations of, Acquisitions by, and Mergers of Bank Holding Companies

The companies listed in this notice have applied to the Board for approval, pursuant to the Bank Holding Company Act of 1956 (12 U.S.C. 1841 et seq.) (BHC Act), Regulation Y (12 CFR Part 225), and all other applicable statutes and regulations to become a bank holding company and/or to acquire the assets or the ownership of, control of, or the power to vote shares of a bank or bank holding company and all of the banks and nonbanking companies owned by the bank holding company, including the companies listed below.

The applications listed below, as well as other related filings required by the

Board, are available for immediate inspection at the Federal Reserve Bank indicated. The application also will be available for inspection at the offices of the Board of Governors. Interested persons may express their views in writing on the standards enumerated in the BHC Act (12 U.S.C. 1842(c)). If the proposal also involves the acquisition of a nonbanking company, the review also includes whether the acquisition of the nonbanking company complies with the standards in section 4 of the BHC Act (12 U.S.C. 1843). Unless otherwise noted, nonbanking activities will be conducted throughout the United States. Additional information on all bank holding companies may be obtained from the National Information Center Web site at *http://www.ffiec.gov/nic/*.

Unless otherwise noted, comments regarding each of these applications must be received at the Reserve Bank indicated or the offices of the Board of Governors not later than April 21, 2005.

A. Federal Reserve Bank of Minneapolis (Richard M. Todd, Vice President and Community Affairs Officer), 90 Hennepin Avenue, Minneapolis, MN 55480–0291:

1. Rum River Bancorporation, Inc., Milaca, Minnesota; to become a bank holding company by acquiring 100 percent of the voting shares of The First National Bank of Milaca, Milaca, Minnesota.

Board of Governors of the Federal Reserve System, March 22, 2005.

**Robert deV. Frierson,**

*Deputy Secretary of the Board.*

[FR Doc. 05–6122 Filed 3–28–05; 8:45 am]

BILLING CODE 6210–01–P

## BOARD OF GOVERNORS OF THE FEDERAL RESERVE SYSTEM

### Sunshine Act Meeting

**TIME AND DATE:**

11:30 a.m., Monday, April 4, 2005.

**PLACE:**

Marriner S. Eccles Federal Reserve Board Building, 20th and C Streets, NW., Washington, DC 20551.

**STATUS:** Closed.

**MATTERS TO BE CONSIDERED:**

1. Personnel actions (appointments, promotions, assignments, reassignments, and salary actions) involving individual Federal Reserve System employees.

2. Any items carried forward from a previously announced meeting.

**FOR FURTHER INFORMATION CONTACT:** Michelle A. Smith, Director, Office of Board Members; 202–452–2955.

**SUPPLEMENTARY INFORMATION:** You may call (202) 452–3206 beginning at approximately 5 p.m. two business days before the meeting for a recorded announcement of bank and bank holding company applications scheduled for the meeting; or you may contact the Board's Web site at *http://www.federalreserve.gov* for an electronic announcement that not only lists applications, but also indicates procedural and other information about the meeting.

Dated: March 25, 2005.

**Jennifer J. Johnson,**

*Secretary of the Board.*

[FR Doc. 05–6320 Filed 3–25–05; 2:18 pm]

BILLING CODE 6210–01–P

## DEPARTMENT OF HEALTH AND HUMAN SERVICES

### Agency for Healthcare Research and Quality

### Agency Information Collection Activities: Proposed Collection; Comment Request

**AGENCY:** Agency for Healthcare Research and Quality, HHS.

**ACTION:** Notice.

**SUMMARY:** This notice announces the intention of the agency for Healthcare Research and Quality (AHRQ) to request the Office of Management and Budget (OMB) to allow the proposed information collection project: ''National Study of the Hospital Adverse Event Reporting Survey''. In accordance with the Paperwork Reduction Act of 1995, 44 U.S.C. 3506(c)(2)(A), AHRQ invites the public to comment on this proposed information collection.

This proposed information collection was previously published in the **Federal Register** on January 24, 2005, and allowed 60 days for public comment. No public comments were received. The purpose of this notice is to allow an additional 30 days for public comment.

**DATES:** Comments on this notice must be received by April 28, 2005.

**ADDRESSES:** Written comments should be submitted to: John Kraemer, at the Office of Information and Regulatory Affairs, OMB at the e-mail address *John_Kraemer@omb.eop.gov* and the fax number is (202) 395–6974.

Copies of the proposed collection plans, data collection instruments, and specific details on the estimated burden can be obtained from the AHRQ Reports Clearance Officer.

**FOR FURTHER INFORMATION CONTACT:** Cynthia D. McMichael, AHRQ Reports Clearance Officer, (301) 427–1651.

**SUPPLEMENTARY INFORMATION:**

**Proposed Project**

*''National Study of the Hospital Adverse Event Reporting Survey''*

The National Study of the Hospital Adverse Event Reporting Survey will use a survey instrument which was developed to examine and characterize adverse event reporting in the Nation's hospitals. The survey will collect information from staff for a nationally representative sample of non-Federal hospitals. Risk managers will complete the questionnaire.

To achieve responses from 960 hospitals, we will contact 1200 hospitals to enlist their cooperation (thus, we anticipate an 80% response rate). Contacting 1200 hospitals should yield 960 Risk Managers with whom to conduct an interview.

The questionnaire will ask whether hospitals collect information on adverse events, and how the information is stored. The questionnaire also asks about the hospital's case definition of a reportable event and whether information on the severity of the adverse event is collected. It inquires about who might report information and whether they can report to a system which is confidential and/or anonymous. The questionnaire also asks about the uses of the data that are collected, reporting systems, and whether information is used for purposes including analytic uses, personnel action, and intervention design. Finally, the questionnaire asks about the other sources of information that are useful for patient safety-related interventions.

The sample will be randomly drawn from the American Hospital Association Field Guide (the ''AHA Guide''). The AHA Guide is a listing of 5,890 registered hospitals, which include Department of Defense, and Veteran's Administration hospitals. The AHA believes its database is close to 100 percent complete. AHA gathers information directly from hospitals via an annual survey. The resulting database includes 0ver 600 fields in areas such as organizational structure, facilities, bed numbers, finances and services specialities. Their survey results are published annually in the AHA Guide. In our sample frame, we will include approximately 5,795 non-Federal hospitals (public hospitals operated by cities, counties, and States and private hospital including both for profit and not-for-profit), and we will

aim to administer the surveys in large, medium and small hospitals.

**Mandate for Data Collection; Sponsorship**

In the Fiscal Year 2002 Senate Appropriations Report for the Departments of Labor, HHS, and Education (Report—107–84), AHRQ was given the following congressional direction:

The Committee further directs AHRQ to provide a report detailing the results of its efforts to reduce medical errors. The report should include how hospitals and other healthcare facilities are reducing medical errors; how these strategies are being shared among health care professionals; how many hospitals and other health care facilities record and track medical errors; how medical error information is used to improve patient safety; what types of incentives and/or disincentives have helped health care professionals reduce medical errors and; a list of the most common root causes of medical errors.

This project is an AHRQ-funded activity as part of its Patient Safety Evaluation Contract.

**Method of Collection**

The survey and data collection procedures have been previously piloted (under OMB #0935–0114 which expired 01/31/2004). The survey mode will be an initial survey with two waves of mailed follow-ups as needed, and a Computer-Assisted Telephone Interviewing (CATI) telephone survey follow-up for the remaining non-responders.

The CATI survey will be tested by survey coordinators at the RAND Survey Research Group prior to fielding to ensure that the questionnaire items appear on the interviewer computer screens as designed, that appropriate range checks are programmed (so that interviewers cannot enter out of range values), that skip patterns are programmed appropriately, and that the data recording is being done correctly. The survey will take approximately 25 minutes to complete. The steps in the process are as follows:

1. For each hospital, telephone interviewers will contact the hospital and ''screen'' for the Risk Manager's name, direct telephone number, and FAX number and will verify the hospital's mailing address. The initial hospital information will come from the 2002 AHA database.

2. All confirmed Risk Managers will receive an advance letter and a copy of the survey in the mail.

3. A reminder letter will be sent to those who have not returned the survey within 2 weeks of the initial mailing, and a re-mail of a the survey will be sent 2 weeks after the reminder letter is sent.

4. If a survey has not been returned after the second re-mail, then a telephone interviewer will attempt to complete the survey with the Risk Manager over the telephone. The interviewer will record responses electronically using specially prepared software.

5. It is anticipated that there will be a follow-up survey (using a similar survey strategy) administered 2 or 3 years later.

**Estimated Annual Respondent Burden**

It is estimated that 960 Risk Managers will participate in the 25 minute national study. This yields a 403.2 hour burden per year and at an estimated $27.10 per hour, the annualized cost to the surveyed 960 (approximately 1000) hospitals would be a total of $10,926.72 or about $11.38 each. The figures are summarized in the table below:

| Type of respondent | Number of respondents | Estimated time per respondent in hours | Estimated total burden hours | Estimated annual cost to each hospital |
|---|---|---|---|---|
| Risk Manager | 960 | .42 (25 minutes) | 403.20 | $11.38 |

**Request for Comments**

In accordance with the above-cited Paperwork Reduction Act legislation, comments on the AHRQ information collection proposal are requested with regard to any of the following: (a) Whether the proposed collection of information is necessary for the proper performance of functions of the Agency, including whether the information will have practical utility; (b) the accuracy of the Agency's estimate of the burden (including hours and costs) of the proposed collection of information; (c) ways to enhance the quality, utility, and clarity of the information to be collected; and, (d) ways to minimize the burden of the collection of information on respondents, including the use of automated collection techniques or other forms of information technology.

Comments submitted in response to this notice will be summarized and included in the request for OMB approval of the proposed information collection. All comments will become a matter of public record.

Dated: March 10, 2005.

**Carolyn M. Clancy,**

*Director.*

[FR Doc. 05–6172 Filed 3–28–05; 8:45 am]

BILLING CODE 4160–90–M

## DEPARTMENT OF HEALTH AND HUMAN SERVICES

### Agency for Healthcare Research and Quality

### Meeting of the National Advisory Council for Healthcare Research and Quality

**AGENCY:** Agency for Healthcare Research and Quality (AHRQ).

**ACTION:** Notice of public meeting.

**SUMMARY:** In accordance with section 10(a) of the Federal Advisory Committee Act, this notice announces a meeting of the National Advisory Council for Healthcare Research and Quality.

**DATES:** The meeting will be held on Friday, April 15, 2005, from 9 a.m. to 4 p.m. The morning session (9 a.m.–12 p.m.) is open to the public. The afternoon session 12:01 p.m. to 4 p.m. will be closed to the public in accordance with the Federal Advisory Committee Act, section 10(d) of 5 U.S.C., Appendix 2 and 5 U.S.C. 552b(c)(6). Grant applications are to be discussed at this meeting. These discussions are likely to include personal information concerning individuals associated with the applications, confidential research designs and potentially proprietary information. This information is exempt from mandatory disclosure under the above-cited statutes.

**ADDRESSES:** The meeting will be held at the John Eisenberg Room (800) of the Hubert H. Humphrey Building, Department of Health and Human

Services, 200 Independence Avenue, SW., Washington, DC.

**FOR FURTHER INFORMATION CONTACT:** Deborah Queenan, Coordinator of the Advisory Council, at the Agency for Healthcare Research and Quality, 540 Gaither Road, Rockville, Maryland, 20850, (301) 427–1330. For press-related information, please contact Karen Migdail at (301) 427–1855.

If sign language interpretation or other reasonable accommodation for a disability is needed, please contact Mr. Donald L. Inniss, Director, Office of Equal Employment Opportunity Program, Program Support Center, on (301) 443–1144 no later than April 8, 2005. Agenda, roster, and minutes are available from Ms. Bonnie Campbell, Committee Management Officer, Agency for Healthcare Quality and Research, 540 Gaither Road, Rockville, Maryland 20850. Her phone number is (301) 427–1554.

**SUPPLEMENTARY INFORMATION:**

## I. Purpose

Section 921 of the Public Health Service Act (42 U.S.C. 299c) established the National Advisory Council for Healthcare Research and Quality. In accordance with its statutory mandate, the Council is to advise the Secretary of the Department of Health and Human Services and the Director, Agency for Healtcare Research and Quality (AHRQ), on matters related to actions of the Agency to enhance the quality, improve the outcomes, reduce the costs of health care services, improve access to such services through scientific research, and to promote improvements in clinical practice and in the organization, financing, and delivery of health care services.

The Council is composed of members of the public appointed by the Secretary and Federal ex-officio members.

## II. Agenda

On Friday, April 15, 2005, the meeting will begin at 9 a.m., with the call to order by the Council Chair. The Director, AHRQ, will present the status of the Agency's current research, programs, and initiatives and a discussion of strategic planning. The public portion of the meeting will adjourn at 12 p.m. The official agenda will be available on AHRQ's Web site at *www.ahrq.gov* no later than April 8, 2005.

Dated: March 22, 2005.

**Carolyn M. Clancy,**

*Director.*

[FR Doc. 05–6171 Filed 3–28–05; 8:45 am]

**BILLING CODE 4160–90–M**

## DEPARTMENT OF HEALTH AND HUMAN SERVICES

### Administration on Aging

### Agency Information Collection Activities; Proposed Collection; Comment Request; State Annual Long-Term Care Ombudsman Report and Instructions for Older Americans Act Title VII

**AGENCY:** Administration on Aging, HHS.

**ACTION:** Notice.

**SUMMARY:** The Administration on Aging (AoA) is announcing an opportunity for public comment on the proposed collection of certain information by the agency. Under the Paperwork Reduction Act of 1995 (the PRA), Federal agencies are required to publish notice in the **Federal Register** concerning each proposed collection of information, including each proposed extension of an existing collection of information, and to allow 60 days for public comment in response to the notice. This notice solicits comments on the information collection requirements relating to State Annual Long-Term Care Ombudsman Report and instructions for Older Americans Act Title VII.

**DATES:** Submit written or electronic comments on the collection of information by May 31, 2005.

**ADDRESSES:** Submit electronic comments on the collection of information to: *sue.wheaton@aoa.gov.*

Submit written comments on the collection of information to: Administration on Aging, Washington, DC 20201. Attention: Sue Wheaton.

**FOR FURTHER INFORMATION CONTACT:** Sue Wheaton, telephone: (202) 357–3587; e-mail: *sue.wheaton@aoa.gov.*

**SUPPLEMENTARY INFORMATION:** Under the PRA (44 U.S.C. 3501–3520), Federal agencies must obtain approval from the Office of Management and Budget (OMB) for each collection of information they conduct or sponsor. ''Collection of information'' is defined in 44 U.S.C. 3502(3) and 5 CFR 1320.3(c) and includes agency request or requirements that members of the public submit reports, keep records, or provide information to a third party. Section 3506(c)(2)(A) of the PRA (44 U.S.C. 3506(c)(2)(A)) requires Federal agencies to provide a 60-day notice in the **Federal Register** concerning each proposed collection of information, including each proposed extension of an existing collection of information, before submitting the collection to OMB for approval. To comply with this requirement, AoA is publishing notice of the proposed collection of information set forth in this document. With respect to the following collection of information, AoA invites comments on: (1) Whether the proposed collection of information is necessary for the proper performance of AoA's functions, including whether the information will have practical utility; (2) the accuracy of AoA's estimate of the burden of the proposed collection of information, including the validity of the methodology and assumptions used; (3) ways to enhance the quality, utility, and clarity of the information to be collected; and (4) ways to minimize the burden of the collection of information on respondents, including through the use of automated collection techniques when appropriate, and other forms of information technology.

The reporting system, the National Ombudsman Reporting System (NORS), was developed in response to the needs and directives pertaining to the Long Term Care Ombudsman Program and approved by the Office of Management and Budget for use in FY 1995–96, and extended with slight modifications for use in FY 1997–2001 and again for FY 2002–2006.

This request is to continue the use of the existing information collection, State Annual Long-Term Care Ombudsman Report (and Instructions), from Older Americans Act Title VII grantees. Under section 712(c), section 712(h)(1) and section 712(h)(B) of the Older Americans Act, as amended, states are required to provide information on ombudsmen activities to AoA, which AoA is then required to present to Congress. We are currently working with the states and local Ombudsmen on recommendations to revise and update the form and instructions for use beginning in FY 2007.

The reporting form would retain the following elements: A profile of the cases, complainants and complaints by type of facility; action taken on the complaints; a summary of long-term care issues; a detailed profile of the program and its activities, including the number and type of facilities licensed and operating in the state (and the number beds this represents); the staffing and funding of local programs; and an overview of other ombudsman activities (including: Training, technical assistance, consultation to organizations and individuals, resident visitation, community education, etc.)

AoA estimates the burden of this collection of information as follows: Approximately one and one-half hour per respondent with 52 State Agencies on Aging responding annually.

Dated: March 23, 2005.

**Josefina G. Carbonell,**

*Assistant Secretary for Aging.*

[FR Doc. 05–6094 Filed 3–28–05; 8:45 am]

**BILLING CODE 4154–01–P**

## DEPARTMENT OF HEALTH AND HUMAN SERVICES

### Administration on Aging

### Agency Information Collection Activities; Proposed Collection; Comment Request; Certification of Maintenance of Effort Form Title III of the Older Americans Act, Grants for State and Community Programs on Aging

**AGENCY:** Administration on Aging, HHS.

**ACTION:** Notice.

**SUMMARY:** The Administration on Aging (AoA) is announcing an opportunity for public comment on the proposed collection of certain information by the agency. Under the Paperwork Reduction Act of 1995 (the PRA), Federal agencies are required to publish notice in the **Federal Register** concerning each proposed collection of information, including each proposed extension of an existing collection of information, and to allow 60 days for public comment in response to the notice. This notice solicits comments on the information collection requirements relating to Certification of Maintenance of Effort Form Title III of the Older Americans Act, Grants for State and Community Programs on Aging.

**DATES:** Submit written or electronic comments on the collection of information by May 31, 2005.

**ADDRESSES:** Submit electronic comments on the collection of information to: *margaret.tolson@aoa.gov.*

Submit written comments on the collection of information to: Administration on Aging, Washington, DC 20201. Attention: Margaret Tolson.

**FOR FURTHER INFORMATION CONTACT:** Margaret Tolson, telephone: (202) 357–3440; e-mail: *margaret.tolson@aoa.gov.*

**SUPPLEMENTARY INFORMATION:** Under the PRA (44 U.S.C. 3501–3520), Federal agencies must obtain approval from the Office of Management and Budget (OMB) for each collection of information they conduct or sponsor. ''Collection of information'' is defined in 44 U.S.C. 3502(3) and 5 CFR 1320.3(c) and includes agency request or requirements that members of the public submit reports, keep records, or provide information to a third party. Section 3506(c)(2)(A) of the PRA (44 U.S.C. 3506(c)(2)(A)) requires Federal agencies to provide a 60-day notice in the **Federal Register** concerning each proposed collection of information, including each proposed extension of an existing collection of information, before submitting the collection to OMB for approval. To comply with this requirement, AoA is publishing notice of the proposed collection of information set forth in this document. With respect to the following collection of information, AoA invites comments on: (1) Whether the proposed collection of information is necessary for the proper performance of AoA's functions, including whether the information will have practical utility; (2) the accuracy of AoA's estimate of the burden of the proposed collection of information, including the validity of the methodology and assumptions used; (3) ways to enhance the quality, utility, and clarity of the information to be collected; and (4) ways to minimize the burden of the collection of information on respondents, including through the use of automated collection techniques when appropriate, and other forms of information technology.

Title III of the Older Americans Act, Section 309(c), requires that a state's allotment be reduced by the percentage by which its state expenditures for a given fiscal year are less than its average annual expenditures from state sources for the period of three consecutive fiscal years preceding such fiscal year. Since information collected on the SF–269 report combines the funds from state and local sources, the Administration on Aging is unable to identify funds solely from State sources. The information contained on the Certification of Maintenance of Effort form will be used by the Administration on Aging to verify the amount of state expenditures and make comparisons with the average annual expenditures for the period of three consecutive fiscal years preceding the given year to assure that a state is in compliance with 45 CFR 1321.49.

AoA estimates the burden of this collection of information as follows: Approximately one-half hour per respondent with 52 State Agencies on Aging responding annually, thus producing a burden of 26 hours per year.

Dated: March 23, 2005.

**Josefina G. Carbonell,**

*Assistant Secretary for Aging.*

[FR Doc. 05–6095 Filed 3–28–05; 8:45 am]

**BILLING CODE 4154–01–P**

## DEPARTMENT OF HEALTH AND HUMAN SERVICES

### Administration for Children and Families

### Proposed Information Collection Activity; Comment Request

*Proposed Projects*

*Title:* Adoption and Foster Care Analysis Reporting System for title IV–B and title IV–E.

*OMB No.:* 0980–0267.

*Description*

Section 479 of title IV–E of the Social Security Act directs States to establish and implement an adoption and foster care reporting system. The data are used for a number of reasons, including responding to Congressional requests for current data on children in foster care or those who have been adopted; responding to questions and requests from other Federal departments and agencies; trend analyses and short- and long-term planning; targeting areas for greater or potential technical assistance efforts; and determining and assessing outcomes for children and families.

*Respondents:* States, District of Columbia and Puerto Rico.

ANNUAL BURDEN ESTIMATES

| Instrument | Number of respondents | Number of responses per respondent | Average burden hours per response | Total burden hours |
|---|---|---|---|---|
| AFCARS (Electronic Submission) | 52 | 2 | 2,971.89 | 309,077 |

*Estimated Total Annual Burden Hours:* 309,077.

In compliance with the requirements of Section 3506(c)(2)(A) of the Paperwork Reduction Act of 1995, the Administration for Children and

Families is soliciting public comment on the specific aspects of the information collection described above. Copies of the proposed collection of information can be obtained and comments may be forwarded by writing to the Administration for Children and Families, Office of Administration, Office of Information Services, 370 L'Enfant Promenade, SW., Washington, DC 20447, Attn: ACF Reports Clearance Officer. E-mail address: *grjohnson@acf.hhs.gov.* All requests should be identified by the title of the information collection.

*The Department specifically requests comments on:* (a) Whether the proposed collection of information is necessary for the proper performance of the functions of the agency, including whether the information shall have practical utility; (b) the accuracy of the agency's estimate of the burden of the proposed collection of information; (c) the quality, utility, and clarity of the information to be collected; and (d) ways to minimize the burden of the collection of information on respondents, including through the use of automated collection techniques or other forms of information technology. Consideration will be given to comments and suggestions submitted within 60 days of this publication.

Dated: March 23, 2005

**Robert Sargis,**

*Reports Clearance Officer.*

[FR Doc. 05–6170 Filed 3–28–05; 8:45 am]

**BILLING CODE 4184–01–M**

## DEPARTMENT OF HEALTH AND HUMAN SERVICES

### Food and Drug Administration

**[Docket No. 2004N–0554]**

### Agency Information Collection Activities; Submission for Office of Management and Budget Review; Irradiation in the Production, Processing, and Handling of Food

**AGENCY:** Food and Drug Administration, HHS.

**ACTION:** Notice.

**SUMMARY:** The Food and Drug Administration (FDA) is announcing that a proposed collection of information has been submitted to the Office of Management and Budget (OMB) for review and clearance under the Paperwork Reduction Act of 1995.

**DATES:** Fax written comments on the collection of information by April 28, 2005.

**ADDRESSES:** OMB is still experiencing significant delays in the regular mail, including first class and express mail, and messenger deliveries are not being accepted. To ensure that comments on the information collection are received, OMB recommends that comments be faxed to the Office of Information and Regulatory Affairs, OMB, Attn: Fumie Yokota, Desk Officer for FDA, FAX: 202–395–6974.

**FOR FURTHER INFORMATION CONTACT:** Peggy Robbins, Office of Management Programs (HFA–250), Food and Drug Administration, 5600 Fishers Lane, Rockville, MD 20857, 301–827–1223.

**SUPPLEMENTARY INFORMATION:** In compliance with 44 U.S.C. 3507, FDA has submitted the following proposed collection of information to OMB for review and clearance.

#### Irradiation in the Production, Processing, and Handling of Food—21 CFR 179.21 (OMB Control Number 0910–0549)—Extension

Under section 409(a) of the Federal Food, Drug, and Cosmetic Act (the act) (21 U.S.C. 348(a)), the use of a food additive is deemed unsafe unless it conforms to the terms of a regulation prescribing its use, or to an exemption for investigational use, or in the case of a food additive that is a food contact substance, there is in effect a regulation prescribing the conditions under which such additive may be safely used or a notification that is effective. In response to a petition that is submitted under section 409 of the act to establish that a food additive is safe, the agency may either: (1) By order establish a regulation (whether or not in accord with that proposed by the petitioner) prescribing, with respect to one or more proposed uses of the food additive involved, the conditions under which such additive may be safely used (including, but not limited to, specifications as to the particular food or classes of food in or on which such additive may be used, the maximum quantity which may be used or permitted to remain in or on such food, the manner in which such additive may be added to or used in or on such food, and any directions or other labeling or packaging requirements for such additive deemed necessary by him to assure the safety of such use), and shall notify the petitioner of such order and the reasons for such action; or (2) by order deny the petition and notify the petitioner of such order and of the reasons for such action.

In response to a petition filed by Science Applications International Corp., who subsequently transferred their rights to the petition to Ancore Corp., FDA published in the **Federal Register** of December 21, 2004, a document that amended 21 CFR 179.21 to provide for the use of sources of monoenergetic neutrons to inspect cargo containers that may contain food. Under this regulation, monoenergetic neutron sources producing neutrons at energies not less than 1 million electron volts (MeV) but no greater than 14 MeV may be used for inspection of cargo containers that may contain food, providing that the neutron source bears a label stating the minimum and maximum energy of radiation emitted by the source. The regulation also requires that the label or accompanying labeling bear adequate directions for safe use and a statement that no food shall be exposed to this radiation source so as to receive a dose in excess of 0.01 gray. FDA has determined that this information is needed to assure safe use of the source of radiation.

In the **Federal Register** of January 4, 2005 (70 FR 366), FDA published a 60-day notice requesting public comment on the information collection provisions. No comments were received.

FDA estimates the burden for this collection of information as follows:

TABLE 1.—ESTIMATED ANNUAL REPORTING BURDEN[1]

| 21 CFR Section | Number of Respondents | Annual Frequency Per Response | Total Annual Responses | Hours Per Response | Total Operating and aintenance Costs | Total Hours |
|---|---|---|---|---|---|---|
| 179.21(a)(5) and (b)(2)(v) | 1 | 1 | 1 | 1 | $100 | 1 |

[1]There are no capital costs associated with this collection of information.

FDA estimates that the burden will be insignificant because the reporting requirement reflects customary business practice. Based on discussions with an industry representative, the burden hours estimated for this collection of information is 1 hour. The operating and maintenance cost associated with this collection is $100 for preparation of labels.

Dated: March 21, 2005.

**Jeffrey Shuren,**

*Assistant Commissioner for Policy.*

[FR Doc. 05–6086 Filed 3–28–05; 8:45 am]

**BILLING CODE 4160–01–S**

---

## DEPARTMENT OF HEALTH AND HUMAN SERVICES

### Food and Drug Administration

**[Docket No. 2004N–0534]**

### Agency Information Collection Activities; Submission for Office of Management and Budget Review; Comment Request; Format and Content for Over-the-Counter Drug Product Labeling

**AGENCY:** Food and Drug Administration, HHS.

**ACTION:** Notice.

**SUMMARY:** The Food and Drug Administration (FDA) is announcing that a proposed collection of information has been submitted to the Office of Management and Budget (OMB) for review and clearance under the Paperwork Reduction Act of 1995 (the PRA).

**DATES:** Fax written comments on the collection of information by April 28, 2005.

**ADDRESSES:** OMB is still experiencing significant delays in the regular mail, including first class and express mail, and messenger deliveries are not being accepted. To ensure that comments on the information collection are received, OMB recommends that written comments be faxed to the Office of Information and Regulatory Affairs, OMB, Attn: Fumie Yokota, Desk Officer for FDA, FAX: 202–395–6974.

**FOR FURTHER INFORMATION CONTACT:** Karen L. Nelson, Office of Management Programs (HFA–250), Food and Drug Administration, 5600 Fishers Lane, Rockville, MD 20857, 301–827–1482.

**SUPPLEMENTARY INFORMATION:** In compliance with 44 U.S.C. 3507, FDA has submitted the following proposed collection of information to OMB for review and clearance.

**Format and Content for Over-the-Counter (OTC) Drug Product Labeling—(OMB Control Number 0910–0340)—Extension**

In the **Federal Register** of March 17, 1999 (64 FR 13254), FDA amended its regulations governing requirements for human drug products to establish a standardized format for the labeling of all over-the-counter (OTC) drug products. The rule added new § 201.66 (21 CFR 201.66) and requires OTC drug product labeling to include uniform headings and subheadings, presented in a standardize order, with minimum standards for type size and other graphic features. The rule is intended to enable consumers to better read and understand OTC drug product labeling and to apply this information to the safe and effective use of OTC drug products. FDA concludes that the labeling statements required under this rule are not subject to review by the OMB because they are ''a public disclosure of information originally supplied by the Federal government to the recipient for the purpose of disclosure to the public'' (5 CFR 1320.3(c)(2)) and therefore do not constitute a ''collection of information'' under the PRA (44 U.S.C. 3501 *et seq.*).

Section 201.66 of the labeling requirements requires all OTC drug manufacturers to format labeling as set forth in paragraphs (c) and (d). FDA has learned from the industry that OTC drug product manufacturers routinely redesign the labeling of their products as part of their usual and customary business practice. The rule provides varied timeframes for implementing the OTC labeling requirements. Therefore, the majority of respondents have been able to format OTC drug product labeling in accordance with § 201.66 as part of their routine redesign practice, creating no additional paperwork or economic burden.

In discussing the collection of information under the PRA in the final rule (64 FR 13254 at 13274 to 13276), FDA estimated that, of the 39,310 stock keeping units (SKUs) (individual products, packages, and sizes) marketed under a final monograph when the OTC labeling requirements were issued on March 17, 1999, approximately 32 percent, or 12,573 products, may necessitate labeling format changes sooner than provided under their usual and customary practice of label design. FDA estimated that of the 400 respondents who produce OTC drug products, including the 12,573 products described above, each may be required to respond approximately 31.4 times to this rule outside of their usual and customary practice. Each response was estimated to take, on the average, 4 hours, for a total of 50,292 hours per year. This burden was expected to be a one-time burden.

FDA stated that although the usual and customary practice of label redesign would minimize the burden for the remaining 68 percent of SKUs, or 26,737 products, marketed at the time the OTC labeling requirements were issued on March 17, 1999, additional time may be necessary for each company to make the format changes under this rule. FDA estimated that of the 400 respondents who produce OTC drug products, each may be required to respond approximately 66.8 times to bring the 26,737 products into compliance with the rule. FDA estimated that for this group, each response will take an average of 2.5 hours for a total of 66,842 hours. This burden was expected to be a one-time burden.

Finally, FDA estimated that approximately 61 respondents hold new drug applications (NDAs) and abbreviated new drug applications (ANDAs) (41 NDA holders and 20 ANDA holders) for which supplements and amendments would be required. FDA expected that 522 submissions (350 to NDAs and 172 to ANDAs) would be required for labeling changes under § 201.66(c) and (d), which averages to 8.5 submissions per respondent. FDA estimated that each submission wouldtake an average of 2 hours to prepare for a total of 1,040 hours annually. This burden was also expected to be a one-time burden.

Since the final rule was issued on March 17, 1999, FDA extended the May 16, 2001, compliance date by 1 year to May 16, 2002 (with a corresponding extension of the May 16, 2002, compliance date for products with annual sales of less than $25,000 to May 16, 2003) (65 FR 38191, June 20, 2000). Since March 17, 1999, FDA has published 6 additional major final rules on OTC drug monographs and several minor amendments to existing final monographs. The effective date for relabeling the OTC drug products affected by these final monographs in the new format occurred by the end of 2004, except for OTC sunscreen drug products (for which implementation of the new labeling requirements has been stayed indefinitely while FDA amends the monograph for these products) and a small number of other OTC drug products with annual sales less than $25,000. Based on information in the 6 final rules issued since 1999, FDA estimates that 11,250 additional SKUs (out of the original 26,737 that needed to be relabeled in the new format) have

already been affected by the final rule. Thus, 15,487 SKUs remain to be affected by the OTC drug product labeling final rule, minus approximately 2,000 OTC sunscreen drug product SKUs. All of these except the sunscreen drug products will need to have the new labeling format by May 16, 2005, for products initially introduced or initially delivered for introduction into interstate commerce after that date. For these reasons, FDA considers the number of products remaining to be affected by the OTC drug products labeling final rule to be close to the number of products that were affected at the time the final rule published on March 17, 1999. FDA finds that the number of products remaining to be affected by the final rule is similar to the number of products that were estimated as initially affected in the collection of information in the final rule. Accordingly, in this notice FDA is using the same numbers of respondents, annual frequency per response, and total annual responses it estimated in 1999.

FDA believes the hours per response and total hours may be less than the numbers stated in the final rule for several reasons. First, respondents have made a number of inquiries already since the final rule was issued in 1999. FDA's experience is that inquiries have been less than 2.5 or 4 hours per response, generally averaging 0.25 to 0.5 hours per inquiry. Second, FDA has issued a guidance for industry entitled ''Labeling OTC Human Drug Products—Updating Labeling in RLDs and ANDAs'' (67 FR 64402, October 18, 2002), which included a number of labeling examples to assist holders of RLDs (reference listed drugs, i.e., the applicable innovator) and ANDAs for OTC drug products to implement the new OTC drug product labeling regulation. Third, FDA has issued two draft guidances for industry entitled ''Labeling OTC Drug Products (Small Entity Compliance Guide)'' (69 FR 71420, December 9, 2004) and ''Labeling OTC Human Drug Products—Questions and Answers'' (70 FR 2415, January 13, 2005). These guidances provide extensive additional information and examples how to implement the new OTC drug product labeling requirements.

The guidance documents should have reduced some of the hours per response and total hours for some NDA and ANDA holders and manufacturers who market products under the OTC drug monographs. However, FDA is not currently able to estimate how much the time has been reduced. Accordingly, in this notice FDA is listing the same hours per response and total hours as appeared in the final rule.

In the **Federal Register** of January 4, 2005 (70 FR 362), FDA requested comments on the proposed collections of information. No comments were received.

TABLE 1.—ESTIMATED ANNUAL REPORTING BURDEN[1]

| 21 CFR | No. of Respondents | Annual Frequency per Response | Total Annual Responses | Hours Per Response | Total Hours |
|---|---|---|---|---|---|
| 201.66[1] | 400 | 31.43 | 12,573 | 4 | 50,292 |
| 201.66 | 400 | 66.8 | 26,737 | 2.5 | 66,842 |
| 201.66(c) and (d)[1] | 61 | 8.5 | 522 | 2 | 1,044 |
| 201.66(e) | 25 | 4 | 100 | 24 | 2,400 |
| Total | | | | | 120,578 |

[1]There are no capital costs or operating and maintenance costs associated with this collection of information.

Dated: March 21, 2005.

**Jeffrey Shuren,**

*Assistant Commissioner for Policy.*

[FR Doc. 05–6088 Filed 3–28–05; 8:45 am]

BILLING CODE 4160–01–S

## DEPARTMENT OF HEALTH AND HUMAN SERVICES

### Food and Drug Administration

**[Docket No. 2005N–0102]**

### Referral of KEMSTRO (Baclofen) and DROXIA (Hydroxyurea) for the Conduct of Pediatric Studies

**AGENCY:** Food and Drug Administration, HHS.

**ACTION:** Notice.

**SUMMARY:** The Food and Drug Administration (FDA) is announcing the referral of KEMSTRO (baclofen) and DROXIA (hydroxyurea) to the Foundation for the National Institutes of Health (the Foundation) for the conduct of pediatric studies. FDA referred KEMSTRO (baclofen) and DROXIA (hydroxyurea) to the Foundation on September 1, 2004, and October 20, 2004, respectively. FDA is publishing this notice of the referrals in accordance with the Best Pharmaceuticals for Children Act (BCPA).

**FOR FURTHER INFORMATION CONTACT:** Grace Carmouze, Center for Drug Evaluation and Research (HFD–960), Food and Drug Administration, 5600 Fishers Lane, Rockville, MD 20857, 301–594–7337.

**SUPPLEMENTARY INFORMATION:**

### I. Background

In accordance with section 4 of the BPCA (Public Law 107–109), FDA is announcing the referral to the Foundation of the written requests for the conduct of pediatric studies for KEMSTRO (baclofen) and DROXIA (hydroxyurea). Enacted on January 4, 2002, the BPCA reauthorizes, with certain important changes, the exclusivity incentive program described in section 505A of the Federal Food, Drug, and Cosmetic Act (the act) (21 U.S.C. 355a). Section 505A of the act permits certain applications to obtain 6 months of exclusivity if, in accordance with the requirements of the statute, the sponsor submits requested information relating to the use of the drug in the pediatric population.

The BPCA established additional mechanisms for obtaining information on the safe and effective use of drugs in pediatric patients. Specifically, section 4 of the BPCA amends section 505A(d) of the act to create a referral process to obtain studies for drugs that have patent or exclusivity protection, but for which the sponsor has declined to conduct the pediatric studies in response to a written request by FDA. Under section 4 of the BPCA, if the Secretary of Health and Human Services (the Secretary) determines that there is a continuing need for the pediatric studies described in the written request and the sponsors of the products with patent or exclusivity protection have declined to conduct the studies, the Secretary shall refer the drug to the Foundation, established under section 499 of the Public Health Service Act (42 U.S.C. 290(b)), for the conduct of the pediatric studies described in the written request (21 U.S.C. 355a(d)(4)(B)(i)). In addition, the BPCA requires public notice of the name of the drug, name of the

manufacturer, and indications to be studied under the referrals (21 U.S.C. 355a(d)(4)(B)(ii)).

In accordance with section 4 of the BPCA, FDA is announcing that it has referred to the Foundation the written requests for pediatric studies for KEMSTRO (baclofen) and DROXIA (hydroxyurea). On April 30, 2004, FDA issued a written request for pediatric studies to Schwarz Pharma, Inc., the holder of approved applications for KEMSTRO (baclofen) that have market exclusivity. The studies described in the written request were for the treatment of spasticity in the pediatric population. Schwarz Pharma, Inc., declined to conduct the requested studies. FDA has determined that there is a continuing need for information relating to the use of KEMSTRO (baclofen) in the pediatric population.

On March 29, 2004, FDA issued a written request for pediatric studies to Bristol-Myers Squibb Co., the holder of approved applications for DROXIA (hydroxyurea) that have market exclusivity. The studies described in the written request were for the treatment of sickle cell disease in the pediatric population. Bristol-Myers Squibb Co. declined to conduct the requested studies. FDA has determined that there is a continuing need for information relating to the use of DROXIA (hydroxyruea) in the pediatric population.

Consistent with the provisions of the BPCA, FDA referred to the Foundation the written requests for the conduct of the pediatric studies for KEMSTRO (baclofen) on September 1, 2004, and DROXIA (hydroxyurea) on October 20, 2004.

Dated: March 22, 2005.

**Jeffrey Shuren,**

*Assistant Commissioner for Policy.*

[FR Doc. 05–6158 Filed 3–28–05; 8:45 am]

**BILLING CODE 4160–01–S**

## DEPARTMENT OF HEALTH AND HUMAN SERVICES

### Food and Drug Administration

### Pulmonary-Allergy Drugs Advisory Committee; Notice of Meeting

**AGENCY:** Food and Drug Administration, HHS.

**ACTION:** Notice.

This notice announces a forthcoming meeting of a public advisory committee of the Food and Drug Administration (FDA). The meeting will be open to the public.

*Name of Committee*: Pulmonary-Allergy Drugs Advisory Committee.

*General Function of the Committee*: To provide advice and recommendations to the agency on FDA's regulatory issues.

*Date and Time*: The meeting will be held on June 6, 2005, from 8 a.m. to 5:30 p.m.

*Location*: Center for Drug Evaluation and Research Advisory Committee Conference Room, rm. 1066, 5630 Fishers Lane, Rockville, MD.

*Contact Person*: Teresa A. Watkins, Center for Drug Evaluation and Research (HFD–21), Food and Drug Administration, 5630 Fishers Lane, rm. 1093, Rockville, MD 20857, 301–827–7001, or FDA Advisory Committee Information Line, 1–800–741–8138 (301–443–0572 in the Washington, DC area), code 3014512545. Please call the Information Line for up-to-date information on this meeting.

*Agenda*: The committee will consider the safety and efficacy of new drug application (NDA) 50–799, proposed trade name PULMINIQ (cyclosporine, inhalation solution) Chiron Corp., for use in combination with standard immunosuppressive therapy to increase survival and prevent chronic rejection in patients receiving allogenic lung transplants.

*Procedure*: Interested persons may present data, information, or views, orally or in writing, on issues pending before the committee. Written submissions may be made to the contact person by May 26, 2005. Oral presentations from the public will be scheduled between approximately 1 p.m. and 2 p.m. Time allotted for each presentation may be limited. Those desiring to make formal oral presentations should notify the contact person before May 26, 2005, and submit a brief statement of the general nature of the evidence or arguments they wish to present, the names and addresses of proposed participants, and an indication of the approximate time requested to make their presentation.

Persons attending FDA's advisory committee meetings are advised that the agency is not responsible for providing access to electrical outlets.

FDA welcomes the attendance of the public at its advisory committee meetings and will make every effort to accommodate persons with physical disabilities or special needs. If you require special accommodations due to a disability, please contact La'Nise Giles at 301–827–7001 at least 7 days in advance of the meeting.

Notice of this meeting is given under the Federal Advisory Committee Act (5 U.S.C. app. 2).

Dated: March 21, 2005.

**Sheila Dearybury Walcoff,**

*Associate Commissioner for External Relations.*

[FR Doc. 05–6087 Filed 3–28–05; 8:45 am]

**BILLING CODE 4160–01–S**

## DEPARTMENT OF HEALTH AND HUMAN SERVICES

### Food and Drug Administration

**[Docket Nos. 2004D–0187, 2004D–0188, and 2004D–0189]**

### Guidances for Industry on Premarketing Risk Assessment; Development and Use of Risk Minimization Action Plans; and Good Pharmacovigilance Practices and Pharmacoepidemiologic Assessment; Availability

**AGENCY:** Food and Drug Administration, HHS.

**ACTION:** Notice.

**SUMMARY:** The Food and Drug Administration (FDA) is announcing the availability of three guidances for industry entitled ''Premarketing Risk Assessment,'' ''Development and Use of Risk Minimization Action Plans,'' and ''Good Pharmacovigilance Practices and Pharmacoepidemiologic Assessment.'' These guidances provide guidance to industry on risk management activities for drug products, including biological drug products, in the Center for Drug Evaluation and Research (CDER) and the Center for Biologics Evaluation and Research (CBER). The guidances address, respectively, premarket risk assessment; the development, implementation, and evaluation of risk minimization action plans for drug products; and good pharmacovigilance practices and pharmacoepidemiologic assessment of observational data.

**DATES:** Submit written or electronic comments on agency guidances at any time.

**ADDRESSES:** Submit written requests for single copies of the guidances to the Division of Drug Information (HFD–240), Center for Drug Evaluation and Research, Food and Drug Administration, 5600 Fishers Lane, Rockville, MD 20857, or the Office of Communication, Training and Manufacturers Assistance (HFM–40), Center for Biologics Evaluation and Research, Food and Drug Administration, 1401 Rockville Pike, Rockville, MD 20852–1448. These guidances may also be obtained by mail by calling CBER at 1–800–4709 or 301–827–1800. Send three self-addressed

adhesive labels to assist the office in processing your requests. Submit written comments on the guidance to the Division of Dockets Management (HFA–305), Food and Drug Administration, 5630 Fishers Lane, rm. 1061, Rockville, MD 20852. Submit electronic comments to *http://www.fda.gov/dockets/ecomments*. Identify each set of comments with the corresponding docket number of the guidance as follows: Docket No. [2004D–0187] ''Premarketing Risk Assessment,'' Docket No. [2004D–0188] ''Development and Use of Risk Minimization Action Plans,'' and Docket No. [2004D–0189] ''Good Pharmacovigilance Practices and Pharmacoepidemiologic Assessment.'' See the **SUPPLEMENTARY INFORMATION** section for electronic access to the guidance documents.

**FOR FURTHER INFORMATION CONTACT:** *For ''Premarketing Risk Assessment''*: Barbara Gould, Center for Drug Evaluation and Research (HFD–550), Food and Drug Administration, 9201 Corporate Blvd., Rockville, MD 20850, 301–827–2504, or

Patricia Rohan, Center for Biologics Evaluation and Research (HFM–485), Food and Drug Administration, 1401 Rockville Pike, Rockville, MD 20852–1448, 301–827–3070.

*For ''Development and Use of Risk Minimization Action Plans''*: Christine Bechtel, Center for Drug Evaluation and Research (HFD–006), Food and Drug Administration, 1451 Rockville Pike, Rockville, MD 20852, 301–443–5572, or

Mark Weinstein, Center for Biologics Evaluation and Research (HFM–300), Food and Drug Administration, 1401 Rockville Pike, Rockville, MD 20852, 301–827–3518.

*For ''Good Pharmacovigilance Practices and Pharmacoepidemiologic Assessment''*: Patrick Guinn, Center for Drug Evaluation and Research (HFD–6), Food and Drug Administration, 5515 Security Lane, Rockville, MD 20852, 301–443–5590, or

Miles Braun, Center for Biologics Evaluation and Research (HFM–220), Food and Drug Administration, 1401 Rockville Pike, Rockville, MD 20852, 301–827–6090.

**SUPPLEMENTARY INFORMATION:**

## I. Background

FDA is announcing the availability of three guidances for industry entitled ''Premarketing Risk Assessment,'' ''Development and Use of Risk Minimization Action Plans,'' and ''Good Pharmacovigilance Practices and Pharmacoepidemiologic Assessment.'' These three guidances were produced in part to fulfill FDA's commitment to certain risk management performance goals agreed to in relation to the Prescription Drug User Fee Act upon its reauthorization in June 2002. As an initial step, FDA announced the availability of three concept papers on March 7, 2003 (68 FR 11120). Each concept paper focused on one aspect of risk management. FDA held a public workshop on April 9 to 11, 2003, to obtain comment on the concept papers. The comments submitted on the concept papers and at the public meeting were considered in developing the draft guidances. The draft guidances were published on May 5, 2004 (69 FR 25130), and the public was provided with an opportunity to comment on them until July 6, 2004. FDA considered all of the comments received in producing the final guidances.

The guidances address risk management issues pertinent to the successive stages of a product's lifecycle, specifically the following topics: (1) During medical product development, (2) during product application review and approval, and (3) during the postmarketing period. The approaches recommended in the guidances are part of a broad, ongoing, and comprehensive effort by the agency to provide additional guidance to industry on measures that can be employed to minimize the risks while preserving the benefits of medical products.

These guidances recommend that sponsors consider specific risk minimization efforts beyond routine risk minimization measures for the few products presenting unusual types or levels of risk. In these circumstances, using strategies that go beyond routine risk assessment and minimization may further improve the product's benefit-risk balance.

FDA understands that risk management programs generate costs and place new burdens on product developers, health care practitioners, and patients. FDA recommends that, whenever possible, sponsors give every consideration to using the least burdensome method to achieve the desired public health outcome.

FDA recommends that as new products are developed, sponsors seek to identify risk signals as early as possible in a product's development cycle, to evaluate the risks, to communicate predictable risk and benefit information effectively and thoroughly, and to employ efforts to manage these risks as efficiently as possible.

These guidances are being issued consistent with FDA's good guidances practices regulation (21 CFR 10.115). The guidances represent the agency's current thinking on this topic. They do not create or confer any rights for or on any person and do not operate to bind FDA or the public. An alternative approach may be used if such an approach satisfies the requirements of the applicable statutes and regulations.

## II. Comments

Interested persons may submit to the Division of Dockets Management (see **ADDRESSES**) written comments on the guidances at any time. Submit a single copy of electronic comments or two paper copies of any mailed comments, except that individuals may submit one paper copy. Comments are to be identified with the docket numbers found in brackets in the heading of this document. The guidances and received comments may be seen in the Division of Dockets Management between 9 a.m. and 4 p.m., Monday through Friday.

## III. Paperwork Reduction Act of 1995

These guidances contain information collection provisions that are subject to review by the Office of Management and Budget (OMB) under the Paperwork Reduction Act of 1995 (44 U.S.C. 3501–3520). The collection(s) of information in the guidances were approved under OMB control numbers 0910–0001 (until March 31, 2005) and 0910–0338 (until August 31, 2005).

## IV. Electronic Access

Persons with access to the Internet may obtain the document at *http://www.fda.gov/ohrms/dockets/default.htm*, *http://www.fda.gov/cder/guidance/index.htm*, or *http://www.fda.gov/cber/publications.htm*.

Dated: March 24, 2005.

**Jeffrey Shuren,**

*Assistant Commissioner for Policy.*

[FR Doc. 05–6200 Filed 3–24–05; 4:30 pm]

BILLING CODE 4160–01–S

## DEPARTMENT OF HEALTH AND HUMAN SERVICES

### Food and Drug Administration

**[Docket No. 2005D–0106]**

### Draft Guidance for Industry on Systemic Lupus Erythematosus—Developing Drugs for Treatment; Availability

**AGENCY:** Food and Drug Administration, HHS.

**ACTION:** Notice.

**SUMMARY:** The Food and Drug Administration (FDA) is announcing the availability of a draft guidance entitled ''Systemic Lupus Erythematosus—Developing Drugs for Treatment.'' The draft guidance is intended to provide recommendations for industry on developing drugs for the treatment of systemic lupus erythematosus (SLE). Specific topics include measurement of lupus disease activity and clinical outcomes, reduction in disease activity and flares, treatment of organ-specific disease, trial design issues and analysis, surrogate markers as endpoints, and risk-benefit assessment.

**DATES:** Submit written or electronic comments on the draft guidance by June 27, 2005. General comments on agency guidance documents are welcome at any time.

**ADDRESSES:** Submit written requests for single copies of the draft guidance to the Division of Drug Information (HFD–240), Center for Drug Evaluation and Research, Food and Drug Administration, 5600 Fishers Lane, Rockville, MD 20857. Submit written comments on the draft guidance to the Division of Dockets Management (HFA–305), Food and Drug Administration, 5630 Fishers Lane, rm. 1061, Rockville, MD 20852. Submit electronic comments to *http://www.fda.gov/dockets/ecomments*. Send one self-addressed adhesive label to assist the office in processing your requests. See the **SUPPLEMENTARY INFORMATION** section for electronic access to the draft guidance document.

**FOR FURTHER INFORMATION CONTACT:**

Joel Schiffenbauer, Center for Drug Evaluation and Research (HFD–550), Food and Drug Administration, 9201 Corporate Blvd., suite N316, Rockville, MD 20850, 301–827–2090; or

Jeffrey N. Siegel, Center for Drug Evaluation and Research (HFD–108), Food and Drug Administration, 5600 Fishers Lane, Rockville, MD 20857, 301–594–5667.

**SUPPLEMENTARY INFORMATION:**

#### I. Background

FDA is announcing the availability of a draft guidance for industry entitled ''Systemic Lupus Erythematosus—Developing Drugs for Treatment.'' SLE is a chronic disease characterized by protean manifestations often demonstrating a waxing and waning course. In the past, a diagnosis of SLE often implied a decreased life span due to internal organ system involvement or to toxic effects of therapy. However, recent improvements in care have dramatically enhanced the survival of SLE patients with the most severe and life-threatening manifestations. Unfortunately, current treatments for SLE remain inadequate as many patients have incompletely controlled the disease, progression to end-stage organ involvement continues, and current therapies carry potential risks of debilitating side effects. Therefore, it is important to clearly describe acceptable endpoints for approval to facilitate the development of novel therapeutic agents which have the potential to be more effective and/or less toxic.

This draft guidance provides a general discussion of outcomes and measurements of lupus disease activity including the use of disease activity indices, flares, and organ-specific outcomes. It presents the indications that the agency may be willing to approve at present for new drug therapies for lupus. It also presents general trial design issues, discusses the use of surrogate endpoints in relation to lupus, presents the overall risk-benefit assessment that should be addressed for any new therapy of lupus, and presents some issues related to lupus and pharmacokinetics.

This draft guidance is being issued consistent with FDA's good guidance practices regulation (21 CFR 10.115). The draft guidance, when finalized, will represent the agency's current thinking on this topic. It does not create or confer any rights for or on any person and does not operate to bind FDA or the public. An alternative approach may be used if such approach satisfies the requirements of the applicable statutes and regulations.

#### II. Comments

Interested persons may submit to the Division of Dockets Management (see **ADDRESSES**) written or electronic comments on the draft guidance. Two copies of any mailed comments are to be submitted, except that individuals may submit one copy. Comments are to be identified with the docket number found in brackets in the heading of this document. The draft guidance and received comments may be seen in the Division of Dockets Management between 9 a.m. and 4 p.m., Monday through Friday.

#### III. Electronic Access

Persons with access to the Internet may obtain the document at *http://www.fda.gov/ohrms/dockets/default.htm* or *http://www.fda.gov/cder/guidance/index.htm*.

Dated: March 22, 2005.

**Jeffrey Shuren,**

*Assistant Commissioner for Policy.*

[FR Doc. 05–6085 Filed 3–28–05; 8:45 am]

**BILLING CODE 4160–01–S**

## DEPARTMENT OF HOMELAND SECURITY

### Bureau of Customs and Border Protection

### Cancellation of Customs Broker License Due to Death of the License Holder

**AGENCY:** Bureau of Customs and Border Protection, Department of Homeland Security.

**ACTION:** General notice.

**SUMMARY:** Notice is hereby given that, pursuant to Title 19 of the Code of Federal Regulations § 111.51(a), the following individual Customs broker licenses and any and all permits have been cancelled due to the death of the broker:

| Name | License No. | Port name |
|---|---|---|
| Enoch Van Hoesen | 2528 | New York. |
| Manuel A. Gonzalez | 05742 | Miami. |
| Sherry A. Ireland | 22657 | Detroit. |
| Joan P. Shindledecker | 9808 | Baltimore. |
| Robert E. Finley, Sr. | 3448 | Mobile. |
| Gabe S. Fountain | 9170 | Mobile. |

Dated: March 18, 2005.

**William S. Heffelfinger III,**

*Acting Assistant Commissioner, Office of Field Operations.*

[FR Doc. 05–6105 Filed 3–28–05; 8:45 am]

**BILLING CODE 4820–02–P**

## DEPARTMENT OF HOMELAND SECURITY

### Bureau of Customs and Border Protection

### Notice of Cancellation of Customs Broker Permit

**AGENCY:** Bureau of Customs and Border Protection, U.S. Department of Homeland Security.

**ACTION:** General Notice.

**SUMMARY:** Pursuant to section 641 of the Tariff Act of 1930, as amended, (19 U.S.C. 1641) and the Customs Regulations (19 CFR 111.51), the following Customs broker local permits are canceled without prejudice.

| Name | Permit No. | Issuing port |
|---|---|---|
| Godwin Shipping Company, Inc | 19–03–H39 | Mobile. |
| Kamino International Transport, Inc | 00–014 | Houston. |
| Steven Hsien-Lin Wang dba WHL Customs Broker Services | 200108 | Los Angeles. |
| Dynamic Ocean Services International, Inc | 94–2101–1 | Houston. |
| James P. Cesped | 26–02–WSK | Nogales. |
| Marvin Madden | 19–03–J20 | Mobile. |
| David Meth | DF5 | Miami. |
| Robert Conyers | 52–03–AUR | Miami. |

Dated: March 18, 2005.

**William S. Heffelfinger III,**

*Acting Assistant Commissioner, Office of Field Operations.*

[FR Doc. 05–6104 Filed 3–28–05; 8:45 am]

**BILLING CODE 4820–02–P**

## DEPARTMENT OF THE INTERIOR

### Indian Arts and Craft Board

### Proposed Renewal of Information Collection for Source Directory Publication; Comment Request

**AGENCY:** Indian Arts and Crafts Board, Interior.

**ACTION:** Notice.

**SUMMARY:** The Indian Arts and Crafts Board collects information to identify and revise listings for the Source Directory of American Indian and Alaska native owned and operated arts and crafts businesses. Comments on renewal of this collection are requested from the public. After the public review, we will submit the information collection to OMB–OIRA for review and re-approval as required by the Paperwork Reduction Act of 1995.

**DATES:** Submit comments on or before May 3, 2005.

**ADDRESSES:** Send your written comments to Attention: Indian Arts and Crafts Board, U.S. Department of the Interior, 1849 C Street, NW., MS–2058 MIB, Washington, DC 20240. If you wish to submit comments by facsimile, the number is (202) 208–5196, or you may send them by e-mail to ''*iacb@ios.doi.gov.*'' Please mention that your comments concern the Source Directory.

**FOR FURTHER INFORMATION CONTACT:** Requests for additional information or copies of the Source Directory application or renewal forms, *i.e.,* the information collection instruments, should be directed to Meridith Z. Stanton, Director, Indian Arts and Crafts Board, 1849 C Street, NW., MS 2058 MIB, Washington, DC 20240. You may also call (202) 208–3773 (not a toll free call), or send you request by e-mail to ''*iacb@ios.doi.gov*'' or by facsimile to (202) 208–5196.

**SUPPLEMENTARY INFORMATION:**

### I. Abstract

The Source Directory of American Indian and Alaska Native owned and operated arts and craft enterprises is a program of the Indian Arts and Crafts Board that promotes American Indian and Alaska Native arts and crafts. The Source Directory is a forty-one page full-color illustrated publication featuring fine examples of contemporary American Indian and Alaska Native art from the major cultural areas in the United States. The Source Directory also comes with a listing of American Indian and Alaska native owned and operated arts and crafts businesses. This listing is included as an insert in the back cover of the Source Directory.

The service of being listed in this publication is provided free-of-charge to members of federally recognized tribes. Businesses listed in the Source Directory include American Indian and Alaska Native artists and craftspeople, cooperatives, tribal arts and crafts enterprises, businesses privately-owned-and-operated by American Indian and Alaska native artists, designers, and craftspeople, and businesses privately owned-and-operated by American Indian and Alaska Native merchants who retail and/or wholesale authentic Indian and Alaska native arts and crafts. Business listings in the Source Directory are arranged alphabetically by State. The Source Directory may be ordered from either the Oklahoma Arts and Crafts Cooperative, P.O. Box 966, Anadarko, Oklahoma 73005 or the Sioux Indian Museum, 222 New York Street, Rapid City, South Dakota 57701, for a cost of $11.50 which includes shipping and handling. The business listings are also available on the Board's Web site located at *http://www.iacb.doi.gov.*

The Director of the Board uses this information to determine whether an individual or business applying to be listed in the Source Directory meets the requirements for listing. The approved application will be printed in the Source Directory. The Source Directory is updated annually to include new businesses and to update existing information.

### II. Method of Collection

To be listed in the Source Directory, interested individuals and businesses must submit: (1) A letter requesting an entry in the Source Directory, (2) a draft of their business information in a format like the other Source Directory listings, (3) a copy of the individual's or business owner's tribal enrollment card; and for businesses, proof that the business is organized under tribal, state, or federal law; and (4) a certification that the business is an American Indian or Alaska Native owned and operated cooperative, tribal enterprise, or nonprofit organization, or that the owner of the enterprise is an enrolled member of a federally recognized

American Indian tribe or Alaska Native group.

The following information is collected in a single-page form that is distributed by the Indian Arts and Crafts Board. Although listing in the Source Directory is voluntary, submission of this information is required for inclusion in the Directory.

| Information collected | Reason for collection |
|---|---|
| Name of business, mailing address, city, zip code (highway location, Indian reservation, etc.), telephone number ad e-mail address. | To identify the business to be listed in the Source Directory, and method of contact. |
| Type of organization | To identify the nature of the business entity. |
| Hours/season of operation | To identify those days and times when customers may contact the business. |
| Internet website address | To identify whether the business advertises and/or sells inventory online. |
| Main categories of products | To identify the products that the business produces. |
| Retail or wholesale products | To identify whether the business is a retail or wholesale business. |
| Mail order and/or catalog | To identify whether the business has a mail order and/or catalog. |
| Price list information, if applicable | To identify the cost of the listed products. |
| For a cooperative or tribal enterprise, a copy of documents showing that the organization is formally organized under tribal, state or federal law. | To determine whether the business meets the eligibility requirement for listing in the Source Directory. |
| Signed certification that the business is an American Indian or Alaska Native owned and operated cooperative, tribal enterprise, or nonprofit organization. | To obtain verification that the business is an American Indian or Alaska Native owned and operated business. |
| Copy of the business owner's tribal enrollment card | To determine whether the business owner is an enrolled member of a federally recognized tribe. |
| Signed certification that the owner of the business is a member of a federally recognized tribe. | To obtain verification that the business owner is an enrolled member of a federally recognized tribe. |

The proposed use of the information: The information collected will be used by the Indian Arts and Craft Board:

(a) To determine whether an individual or business meets the eligibility requirements for inclusion in the Source Directory, *i.e.,* whether they are either an American Indian or Alaska Native owned and operated cooperative, tribal enterprise, or nonprofit organization, or an enrolled member of a federally recognized American Indian tribe or Alaska Native group;

(b) To identify the applicant's business information to be printed in the Source Directory.

## III. Data

(1) *Title:* Department of the Interior, Indian Arts and Crafts Board, Source Directory of American Indian and Alaska Native owned and operated arts and crafts businesses.

*OMB Control Number:* 1085–0001.

*Type of Review:* Renewal of an existing collection.

*Affected Entities:* Business or other for-profit; tribes.

*Estimated annual number of respondents:* 100.

*Frequency of response:* Annual.

(2) *Annual reporting and recordkeeping burden:*

*Total annual reporting per respondent:* 15 minutes.

*Total annual reporting:* 25 hours.

(3) *Description of the need and use of the information:* Submission of this information is required to receive the benefit of being listed in the Indian Arts and Crafts Board Source Directory. The information is collected to determine the applicant's eligibility for the service and to obtain the applicant's name and business address to be printed in the publication.

## IV. Request for Comments

The Department of the Interior invites comments on:

(a) Whether the collection of information is necessary for the proper performance of the functions of the agency, including whether the information will have practical utility;

(b) The accuracy of the agency's estimate of the burden of the collection and the validity of the methodology and assumptions used;

(c) Ways to enhance the quality, utility, and clarity of the information to be collected; and

(d) Ways to minimize the burden of the collection of information on those who are to respond, including through the use of appropriate automated, electronic, mechanical, or other collection techniques or other forms of information technology.

Burden means the total time, effort, or financial resources expended by persons to generate, maintain, retain, disclose, or provide information to or for a federal agency. This includes the time needed to review instructions; to develop, acquire, install and utilize technology and systems for the purpose of collecting, validating and verifying information, processing and maintaining information, and disclosing and providing information; to train personnel and to be able to respond to a collection of information, to search data sources, to complete and review the collection of information; and to transmit or otherwise disclose the information.

All written comments will be available for public inspection in Room 2058 of the Main Interior Building, 1849 C Street, NW., Washington, DC from 9 a.m. until 3 p.m., Monday through Friday, excluding legal holidays. A valid picture identification is required for entry into the Department of the Interior. The comments, with names and addresses, will be available for public view during regular business hours. If you wish us to withhold your personal information, you must prominently taste at the beginning of your comment what personal information you want us to withhold. We will honor your request to the extent allowable by law.

An agency may not conduct or sponsor, and a person is not required to respond to, a collection of information unless it displays a currently valid Office of Management and Budget control number.

Dated: March 24, 2005.

**Meridith Z. Stanton,**

*Director, Indian Arts and Crafts Board.*

[FR Doc. 05–6157 Filed 3–28–05; 8:45 am]

BILLING CODE 4310–4H–M

## DEPARTMENT OF THE INTERIOR

### Revision to the Outer Continental Shelf (OCS) Policy Committee

**AGENCY:** Minerals Management Service, Interior.

**ACTION:** Revision to the Outer Continental Shelf (OCS) Policy Committee Under the Outer Continental Shelf Lands Act.

**SUMMARY:** Following consultation with the General Services Administration, notice is hereby given that the Secretary of the Interior has revised the OCS Policy Committee charter.

**FOR FURTHER INFORMATION CONTACT:** Jeryne Bryant, Minerals Management Service, Offshore Minerals Management, Herndon, Virginia 20170–4817, telephone (703) 787–1211, *jeryne.bryant@mms.gov.*

**SUPPLEMENTARY INFORMATION:** This notice is published in accordance with Section 9(a) of the Federal Advisory Committee Act of 1972 (Pub. L. 92–643). The OCS Policy Committee will provide advice to the Secretary of the Interior, through the Director of the Minerals Management Service, related to the discretionary functions of the Bureau under the Outer Continental Shelf Lands Act and related statutes. The Committee will review and comment on all aspects of leasing, exploration, development and protection of OCS resources and provide a forum to convey views representative of coastal states, local government, offshore mineral industries, environmental community, and other users of the offshore and the interested public. The charter was revised to include two additional members representing energy consumers and to add the Assistant Secretary, Land and Minerals Management as an ex officio member of the Committee.

### Certification

I hereby certify that the OCS Policy Committee is in the public interest in connection with the performance of duties imposed on the Department of the Interior by the OCS, as amended (43 U.S.C. 1331 *et seq.*).

Dated: March 18, 2005.

**Gale A. Norton,**

*Secretary of the Interior.*

[FR Doc. 05–6169 Filed 3–28–05; 8:45 am]

BILLING CODE 4310–MR–P

## DEPARTMENT OF THE INTERIOR

### Office of the Secretary

### Exxon Valdez Oil Spill Trustee Council; Notice of Meeting

**AGENCY:** Office of the Secretary, Department of the Interior.

**ACTION:** Notice of meeting.

**SUMMARY:** The Department of the Interior, Office of the Secretary is announcing a public meeting of the *Exxon Valdez* Oil Spill Public Advisory Committee.

**DATES:** April 28, 2005, at 10 a.m.

**ADDRESSES:** Exxon Valdez Oil Spill Trustee Council Office, 441 West 5th Avenue, Suite 500, Anchorage, Alaska.

**FOR FURTHER INFORMATION CONTACT:** Douglas Mutter, Department of the Interior, Office of Environmental Policy and Compliance, 1689 ''C'' Street, Suite 119, Anchorage, Alaska, 99501, (907) 271–5011.

**SUPPLEMENTARY INFORMATION:** The Public Advisory Committee was created by Paragraph V.A.4 of the Memorandum of Agreement and Consent Decree entered into by the United States of America and the State of Alaska on August 27, 1991, and approved by the United States District Court for the District of Alaska in settlement of *United States of America* v. *State of Alaska*, Civil Action No. A91–081 CV. The meeting agenda will feature discussions on selected proposed projects for fiscal year 2005.

**Willie R. Taylor,**

*Director, Office of Environmental Policy and Compliance.*

[FR Doc. 05–6138 Filed 3–28–05; 8:45 am]

BILLING CODE 4310–RG–P

## DEPARTMENT OF THE INTERIOR

### Bureau of Indian Affairs

### Submission of Paperwork Reduction Act Request to Office of Management and Budget

**AGENCY:** Bureau of Indian Affairs, Interior.

**ACTION:** Notice.

**SUMMARY:** This notice announces that the Information Collection Request for Bureau of Indian Affairs (BIA) Form–4432, Verification of Indian Preference for Employment in the BIA and the Indian Health Service (IHS) has been submitted to the Office of Management and Budget (OMB) for approval under the provisions of the Paperwork Reduction Act of 1995. The BIA is soliciting public comments on the subject proposal.

**DATES:** Written comments must be submitted on or before April 28, 2005.

**ADDRESSES:** Written comments should be sent directly to the Desk Officer for the Department of the Interior, by facsimile at (202) 395–6566 or you may send an e-mail to: *OIRA_DOCKET@omb.eop.gov.* Send a copy of your comments to Daisy West, Acting Chief, Division of Tribal Government Services, Office of Tribal Services, Bureau of Indian Affairs, 1951 Constitution Avenue, NW., MS–320–SIB, Washington, DC 20240; telephone: (202) 513–7641.

**FOR FURTHER INFORMATION CONTACT:** Carolyn Newman, (202) 513–7641.

**SUPPLEMENTARY INFORMATION:**

A 60-day notice for public comments was published in the **Federal Register** on October 6, 2004 (69 FR 59945). No comments were received on the workload burden or the form itself (OMB Control No. 1076–0160) during this public comment period. One comment was received on October 6, 2004, which concerned a substantive requirement for descendants of members of federally recognized Indian tribes but who were not themselves enrolled members of the tribe. This issue will be addressed during the rule revision.

### I. Abstract

The purpose of the Indian Preference Form is to encourage qualified Indians to seek employment with the BIA and the IHS by offering preferential treatment to qualified candidates of Indian heritage. BIA collects information under the proposed regulations to ensure compliance with Indian preference hiring requirements. The information collection relates only to individuals applying for employment with the BIA and the IHS. The tribe's involvement is limited to verifying membership information submitted by the applicant. The collection of information allows certain persons who are of Indian descent to receive preference when appointments are made to vacancies in positions with the BIA and IHS as well as in any unit that has been transferred intact from the BIA to a Bureau or office within the Department of the Interior, or the Department of Health and Human Services and that continues to perform the functions formerly performed as part of the BIA or the IHS. You are eligible for preference if (a) You are a member of a federally recognized Indian tribe; (b) you are a descendant of a member and you were residing within the

present boundaries of any Indian reservation on June 1, 1934; (c) you are an Alaska Native; or (d) you possess one-half degree Indian blood derived from tribes that are indigenous to the United States. The information is submitted in order to obtain or retain a benefit, namely, preference in employment with the BIA and the IHS.

**II. Request for Comments**

The Department of the Interior invites comments on:

(a) Whether the collection of information is necessary for the proper performance of the functions of the agency, including whether the information will have practical utility;

(b) The accuracy of the agency's estimate of the burden (including the hours and cost) of the proposed collection of information, including the validity of the methodology and assumption used;

(c) Ways to enhance the quality, utility, and clarity of the information to be collected; and

(d) Ways to minimize the burden of the collection of information on those who are to respond, including through the use of appropriate automated, electronic, mechanical, or other collection techniques or other forms of information technology.

The Office of Management and Budget has up to 60 days to approve or disapprove the information collection but may respond after 30 days; therefore, comments submitted in response to this notice should be submitted to OMB within 30 days in order to assure their maximum consideration. Our practice is to make comments, including names and home addresses of respondents, available for public review during regular business hours. If you wish us to withhold any information, you must state this prominently at the beginning of your comment. We will honor your request to the extent allowable by law. Please note that an agency may not conduct or sponsor, and a person is not required to respond to, a collection of information unless a currently valid OMB control number is displayed. You may request copies of the information collection forms and our submission to OMB from the person listed in **FOR FURTHER INFORMATION CONTACT** section.

**III. Data**

*Title:* Verification of Indian Preference for Employment in the BIA and the IHS, BIA Form 4432, 25 CFR 5.

*OMB approval number:* 1076–0160.

*Type of Request:* Extension of a currently approved collection.

*Description of respondents:* Qualified Indians who are seeking preference in employment with the BIA and IHS. Approximately a total of 5,000 applications for preference in employment are received annually by the BIA field offices.

*Frequency:* On occasion as needed.

*Estimated completion time:* The average burden of submitting an Indian Preference Form is 30 minutes including time for reviewing instructions, searching data sources and assembling the information needed.

*Total annual burden:* 5,000 × ½ hour = 2500 hours.

*Estimated cost:* There are no costs to consider, except postage and the cost of duplicating the original verification form, because verification of the information is already available for other reasons. The form will be used by an applicant to seek documentation of Indian descent or membership from either a tribal official or the BIA.

Dated: February 11, 2005.

**David W. Anderson,**

*Assistant Secretary—Indian Affairs.*

[FR Doc. 05–6114 Filed 3–28–05; 8:45 am]

**BILLING CODE 4310–4J–P**

---

## DEPARTMENT OF THE INTERIOR

## Bureau of Reclamation

## Closure Order Establishing Prohibitions at Trinity Lake, CA

**AGENCY:** Bureau of Reclamation, Interior.

**ACTION:** Notice of closure.

**SUMMARY:** *Purpose of Closure Order:* This closure is issued to provide for the protection of Federal property and to ensure public safety at Reclamation facilities.

*Closure Areas:* Under the authority of 43 CFR 423.3(b) the following facilities, lands, and waters are closed to the public: The crest of Trinity Dam and adjacent property, buildings, and facilities under the control of Reclamation. The closure area includes the area from the dam crest to the upstream waterline and 700 feet downstream of Trinity Dam and 700 feet on either side of the entire width of the dam downstream.

**DATES:** The entire closure area is to remain closed effective April 10, 2005, and remain closed indefinitely except as permitted as described below.

**ADDRESSES:** A map is available for inspection at Reclamation's Northern California Area Office (NCAO), located at 16349 Shasta Dam Boulevard, Shasta Lake, California 96019.

**FOR FURTHER INFORMATION CONTACT:** Bureau of Reclamation, Mid-Pacific Region Public Affairs Officer, Jeff McCracken, at (916) 978–5100.

**SUPPLEMENTARY INFORMATION:** *Prohibited Acts:* The following acts are prohibited in the closure area.

A. Operating a motorized vehicle of any kind, including stopping, standing, or parking in the closure area.

General Exception: Operations, maintenance, and construction personnel that have express written authorization from the Mid-Pacific Regional Director, NCAO Area Manager or his/her designee, law enforcement and fire department officials; ambulances and others who have received express written authorization to enter the closure area.

B. Entering the closure area on foot, on bicycle, or by any other means.

General Exception: Reclamation employees acting within the scope of their employment; operations, maintenance, and construction personnel that have express authorization from the Mid-Pacific Regional Director, NCAO Area Manager, or his/her designee, law enforcement and fire department officials; and others who have received express written authorization from the Mid-Pacific Regional Director, NCAO Area Manager, or his/her designee to enter the closure area.

Limited Exception: Pedestrians and bicyclists may enter that portion of the closure area along the west side of the river for the purpose of fishing. All persons shall comply with all signs and other directions as posted or disclosed. This limited exception to the closure order may be revoked at any time to meet operational, security, or safety concerns as determined by the area manager or his/her designee.

C. Operating a vessel or watercraft of any kind, swimming, or scuba diving.

General Exception: Reclamation employees acting within the scope of their employment; operations, maintenance, and construction personnel that have express authorization from the Mid-Pacific Regional Director, NCAO Area Manager, or his/her designee, law enforcement and fire department officials; and others who have received express written authorization from the Mid-Pacific Regional Director, NCAO Area Manager, or his/her designee to enter the closure area.

D. Fires.

E. Vandalism or destroying, injuring, defacing, or damaging real property that is not under one's lawful control or possession.

F. Tampering or attempting to tamper with property or real property, or moving, manipulating, or setting in motion any of the parts thereof.

Violation of the prohibition listed in 43 CFR part 423 is punishable by fine or imprisonment for not more than 6 months, or both.

Dated: March 2, 2005.

**Michael J. Ryan,**

*Area Manager, Northern California Area Office, Mid-Pacific Region.*

[FR Doc. 05–6112 Filed 3–28–05; 8:45 am]

**BILLING CODE 4310–MN–P**

## DEPARTMENT OF THE INTERIOR

### Bureau of Reclamation

### Review of Existing Coordinated Long-Range Operating Criteria for Colorado River Reservoirs (Operating Criteria)

**AGENCY:** Bureau of Reclamation (Reclamation), Interior.

**ACTION:** Notice of final decision regarding the operating criteria.

**SUMMARY:** The purpose of this action is to provide public notice that the Secretary of the Interior (Secretary) has made a number of limited modifications to the text of the Operating Criteria developed pursuant to section 602 of the Colorado River Basin Project Act of 1968. The bases for the changes are: (1) Specific change in Federal law applicable to the Operating Criteria, (2) language in the current text of the Operating Criteria that is outdated, and (3) specific modifications to Article IV(b) of the Operating Criteria that reflect actual operating experience. The review of the Operating Criteria has been conducted through a public review process, including consultation with the seven Colorado River Basin States, tribal representatives, and interested parties and stakeholders.

**DATES:** *Effective Date:* March 21, 2005.

**FOR FURTHER INFORMATION CONTACT:** Jayne Harkins, Bureau of Reclamation, Lower Colorado Region, P.O. Box 61470, Boulder City, Nevada 89006–1470; telephone (702) 293–8411; faxogram (702) 293–8614; e-mail: *jharkins@lc.usbr.gov*; or Tom Ryan, Bureau of Reclamation, Upper Colorado Region, 125 South State Street, Room 6107, Salt Lake City, Utah 84138–1147; telephone (801) 524–3732; faxogram (801) 524–5499; e-mail: *tryan@uc.usbr.gov*.

**SUPPLEMENTARY INFORMATION:** The public review process began with a **Federal Register** notice published on January 15, 2002, announcing the sixth review of the Operating Criteria and inviting comments regarding whether the Operating Criteria should be modified, and if so, how they should be modified (67 FR 1986). The January 15, 2002, notice provided for a comment period that ended on March 18, 2002. On March 6, 2002, a second notice was published in the **Federal Register** extending the comment period to March 29, 2002, and inviting public feedback on whether or not Reclamation should conduct a public meeting to solicit comments as part of the sixth review of the Operating Criteria (67 FR 10225). A letter was then sent to all interested parties, tribes, and stakeholders on March 7, 2002, that included copies of both **Federal Register** notices and the Operating Criteria.

On June 27, 2002, a Fact Sheet providing information on the Operating Criteria, scope of the review process, public participation, timeline for the review process, and contact information was sent to all interested parties and stakeholders. In addition to the Fact Sheet, Reclamation set up a Web site (*http://www.usbr.gov/lc/region/g4000/lroc*) for the sixth review of the Operating Criteria that contained further information on the review, copies of all comment letters received, and links to technical documents Reclamation felt would be useful during the review process.

Detailed written comments were received from 16 interested parties providing Reclamation with numerous issues, comments, and concerns regarding possible changes to the Operating Criteria. The names of the parties that provided comments, as well as the corresponding number assigned by Reclamation to the comment letter, are as follows:

1. Western Area Power Administration, Phoenix, Arizona.
2. Quechan Indian Tribe.
3. Metropolitan Water District of Southern California.
4. National Park Service.
5. Arizona Department of Water Resources.
6. Sierra Club, Southwest Rivers, Defenders of Wildlife, Land and Water Fund of the Rockies, Environmental Defense, Pacific Institute, Friends of Arizona Rivers, Living Rivers, and American Rivers.
7. Interested Party (this entity requested that their name be withheld from public disclosure).
8. Colorado River Board of California.
9. Western Area Power Administration, Salt Lake City, Utah.
10. Upper Colorado River Commission.
11. Irrigation & Electrical Districts Association of Arizona.
12. Colorado Water Conservation Board, State of Colorado.
13. New Mexico Interstate Stream Commission.
14. Office of the Attorney General, Water & Natural Resources Division, State of Wyoming.
15. International Boundary and Water Commission, United States and Mexico.
16. State of Utah, Department of Natural Resources, Division of Water Resources.

The comment letters were reviewed for identification of and analysis of the issues. Responses to the comment letters, as well as the corresponding number of the party that made the comment, are provided under the *Synopsis of Comments and Responses* section of this notice.

As required by Federal law, formal consultation with the seven Basin States, interested parties and stakeholders, as well as government-to-government consultation with tribal representatives, was conducted during this review of the Operating Criteria. The January 15, 2002, **Federal Register** notice stated that open public meetings would be conducted as part of this review, and in the March 6, 2002, **Federal Register** notice, Reclamation asked for comments on whether or not a public meeting should be held. At the end of the comment period (March 29, 2002), several of those who provided comments stated that a public meeting to solicit comments on the need to revise the Operating Criteria was not needed. Accordingly, Reclamation did not conduct a public meeting at that point in the review process.

On November 3, 2004, a Notice of Proposed Decision Regarding the Operating Criteria and Announcement of Public Consultation Meeting was published in the **Federal Register** (69 FR 64096). The Notice identified the proposed changes to the Operating Criteria as Reclamation's response to comments received and invited public input on those changes. The notice announced that a public consultation meeting would be held in Henderson, Nevada, on November 19, 2004, and provided for a comment period that ended on December 6, 2004. On November 4, 2004, a letter was sent to all interested parties, tribes, and stakeholders containing a copy of the November 3, 2004, **Federal Register** notice.

On November 19, 2004, a public consultation meeting was conducted to (1) Discuss the proposed changes to the Operating Criteria as Reclamation's response to comments received, (2)

identify any new issues, (3) answer questions from interested parties, and (4) update the public on the remainder of the review process. This meeting was considered a formal consultation with the seven Basin States, interested parties and stakeholders, as well as government-to-government consultation with tribal representatives as described in the November 3, 2004, **Federal Register** notice.

During the comment period ending December 6, 2004, written comments were received from 11 interested parties. The names of the parties that provided comments, as well as the corresponding number assigned by Reclamation to the comment letter, are as follows:

17. Sierra Club, High Country Citizens' Alliance.
18. Upper Colorado River Commission.
19. Friends of Lake Powell.
20. Brynn C. Johns.
21. State of Utah, Department of Natural Resources, Division of Water Resources.
22. Page Electric Utility.
23. Colorado Water Conservation Board, State of Colorado.
24. City of Page, Arizona.
25. Grand Canyon Trust.
26. Metropolitan Water District of Southern California.
27. Colorado River Board of California.

The additional comment letters were reviewed for identification of and analysis of the issues. Responses to all of the comments received, as well as the corresponding number of the party that made the comment, are provided under the *Synopsis of Comments and Responses* section of this notice.

Following analysis of all comments received as a result of this review, the National Environmental Policy Act was applied to the Secretary's proposed final decision. It was determined that the proposed modifications to the text of the Operating Criteria were administrative in nature and did not constitute a major federal action significantly affecting the quality of the human environment. Therefore, a Categorical Exclusion was prepared by Reclamation.

*Background:* The Operating Criteria, promulgated pursuant to section 602 of the 1968 Colorado River Basin Project Act (Pub. L. 90–537), were published in the **Federal Register** on June 10, 1970 (35 FR 8951). In order to comply with and carry out the provisions of the Colorado River Compact, the Upper Colorado River Basin Compact, and the Mexican Water Treaty, the Operating Criteria provide for the coordinated long-range operation of the reservoirs constructed and operated under the authority of the Colorado River Storage Project Act, the Boulder Canyon Project Act, and the Boulder Canyon Project Adjustment Act. The Operating Criteria state that the Secretary will sponsor a formal review of the Operating Criteria at least every five years with participation by Colorado River Basin State representatives as each Governor may designate and other parties and agencies as the Secretary may deem appropriate. As required by Public Law 102–575 (the Grand Canyon Protection Act of 1992), the Secretary also consults in this review process with the general public including representatives of academic and scientific communities, environmental organizations, the recreation industry, and contractors for the purchase of federal power produced at Glen Canyon Dam.

Previous reviews of the Operating Criteria were conducted in 1975, 1980, 1985, 1990, and 1995. These reviews did not propose any changes to the Operating Criteria. Prior to 1990, reviews were conducted primarily through meetings with and correspondence among representatives of the seven Basin States and Reclamation. Because the long-range operation of Colorado River reservoirs is important to many agencies and individuals, in 1990, through an active public involvement process, Reclamation expanded the review of the Operating Criteria to include all interested stakeholders. A team consisting of Reclamation staff from Salt Lake City, Utah, and Boulder City, Nevada, was organized to conduct the 1995 review. For the current review, Reclamation staff from Boulder City and Salt Lake City followed a similar public process.

The scope of the review has been consistent with the statutory purposes of the Operating Criteria which are ''to comply with and carry out the provisions of the Colorado River Compact, Upper Colorado River Basin Compact, and Mexican Water Treaty'' 43 U.S.C. 1552(a). Long-range operations generally refer to the planning of reservoir operations over several decades, as opposed to the Annual Operating Plan which details specific reservoir operations for the next operating year, as required by 43 U.S.C. 1552(b).

*Modifications to the Operating Criteria:* As a result of this review, the following modifications will be made to the Operating Criteria (additions are shown bolded inside of less than or greater than signs < > and deletions are shown bolded inside of brackets []):

**Long-Range Operating Criteria**

**Amended March 21, 2005**

**Criteria for Coordinated Long-Range Operation of Colorado River Reservoirs Pursuant to the Colorado River Basin Project Act of September 30, 1968 (Pub. L. 90–537)**

These Operating Criteria are promulgated in compliance with section 602 of Public Law 90–537. They are to control the coordinated long-range operation of the storage reservoirs in the Colorado River Basin constructed under the authority of the Colorado River Storage Act (hereinafter ''Upper Basin Storage Reservoirs'') and the Boulder Canyon Project Act (Lake Mead). The Operating Criteria will be administered consistent with applicable Federal laws, the Mexican Water Treaty, interstate compacts, and decrees relating to the use of the waters of the Colorado River.

The Secretary of the Interior (hereinafter the ''Secretary'') may modify the Operating Criteria from time to time in accordance with section 602(b) of Pub. L. 90–537. The Secretary will sponsor a formal <**public**> review of the Operating Criteria at least every 5 years, with participation by State representatives as each Governor may designate and such other parties and agencies as the Secretary may deem appropriate.

**I. Annual Report**

(1) On [**January 1, 1972, and on**] January 1 of each year [**thereafter**], the Secretary shall transmit to the Congress and to the Governors of the Colorado River Basin States a report describing the actual operation under the adopted criteria for the preceding compact water year and the projected plan of operation for the current year.

(2) The plan of operation shall include such detailed rules and quantities as may be necessary and consistent with the criteria contained herein, and shall reflect appropriate consideration of the uses of the reservoirs for all purposes, including flood control, river regulation, beneficial consumptive uses, power production, water quality control, recreation, enhancement of fish and wildlife, and other environmental factors. The projected plan of operation may be revised to reflect the current hydrologic conditions, and the Congress and the Governors of the Colorado River Basin States be advised of any changes by June of each year.

**II. Operation of Upper Basin Reservoirs**

(1) The annual plan of operation shall include a determination by the Secretary of the quantity of water

considered necessary as of September 30 of each year to be in storage as required by section 602(a) of Pub. L. 90–537 (hereinafter ''602(a) Storage''). The quantity of 602(a) Storage shall be determined by the Secretary after consideration of all applicable laws and relevant factors, including, but not limited to, the following:

(a) Historic streamflows;

(b) The most critical period of record;

(c) Probabilities of water supply;

(d) Estimated future depletions of the upper basin, including the effects of recurrence of critical periods of water supply;

(e) The ''Report of the Committee on Probabilities and Test Studies to the Task Force on Operating Criteria for the Colorado River,'' dated October 30, 1969, and such additional studies as the Secretary deems necessary;

(f) The necessity to assure that upper basin consumptive uses not be impaired because of failure to store sufficient water to assure deliveries under section 602(a)(1) and (2) of Pub. L. 90–537.

(2) If in the plan of operation, either:

(a) the Upper Basin Storage Reservoirs active storage forecast for September 30 of the current year is less than the quantity of 602(a) Storage determined by the Secretary under Article II(1) hereof, for that date; or

(b) the Lake Powell active storage forecast for that date is less than the Lake Mead active storage forecast for that date;

the objective shall be to maintain a minimum release of water from Lake Powell of 8.23 million acre-feet for that year. [**However, for the years ending September 30, 1971 and 1972, the release may be greater than 8.23 million acre-feet if necessary to deliver 75,000,000 acre-feet at Lee Ferry for the 10-year period ending September 30, 1972.**]

(3) If, in the plan of operation, the Upper Basin Storage Reservoirs active storage forecast for September 30 of the current water year is greater than the quantity of 602(a) Storage determination for that date, water shall be released annually from Lake Powell at a rate greater than 8.23 million acre-feet per year to the extent necessary to accomplish any or all of the following objectives:

(a) to the extent it can be reasonably applied in the States of the Lower Division to the uses specified in Article III(e) of the Colorado River Compact, but no such releases shall be made when the active storage in Lake Powell is less than the active storage in Lake Mead,

(b) to maintain, as nearly as practicable, active storage in Lake Mead equal to the active storage in Lake Powell, and

(c) to avoid anticipated spills from Lake Powell.

(4) In the application of Article II(3)(b) herein, the annual release will be made to the extent that it can be passed through Glen Canyon Powerplant when operated at the available capability of the powerplant. Any water thus retained in Lake Powell to avoid bypass of water at the Glen Canyon Powerplant will be released through the Glen Canyon Powerplant as soon as practicable to equalize the active storage in Lake Powell and Lake Mead.

(5) Releases from Lake Powell pursuant to these criteria shall not prejudice the position of either the upper or lower basin interests with respect to required deliveries at Lee Ferry pursuant to the Colorado River Compact.

## III. Operation of Lake Mead

(1) Water released from Lake Powell, plus the tributary inflows between Lake Powell and Lake Mead, shall be regulated in Lake Mead and either pumped from Lake Mead or released to the Colorado River to meet requirements as follows:

(a) Mexican Treaty obligations;

(b) Reasonable consumptive use requirements of mainstream users in the Lower Basin;

(c) Net river losses;

(d) Net reservoir losses;

(e) Regulatory wastes.

(2) [**Until such time as mainstream water is delivered by means of the Central Arizona Project, the consumptive use requirements of Article III(1)(b) of these Operating Criteria will be met.**] <**(Adopted: June 10, 1970, Deleted: March 21, 2005)**>

(3) After commencement of delivery of mainstream water by means of the Central Arizona Project, the consumptive use requirements of Article III(1)(b) of these Operating Criteria will be met to the following extent:

(a) Normal: The annual pumping and release from Lake Mead will be sufficient to satisfy 7,500,000 acre-feet of annual consumptive use in accordance with the decree in *Arizona* v. *California,* 376 U.S. 340 (1964).

(b) Surplus: The Secretary shall determine from time to time when water in quantities greater than ''Normal'' is available for either pumping or release from Lake Mead pursuant to Article II(b)(2) of the decree in *Arizona* v. *California* after consideration of all relevant factors, including, but not limited to, the following:

(i) the requirements stated in Article III(1) of these Operating Criteria;

(ii) requests for water by holders of water delivery contracts with the United States, and of other rights recognized in the decree in *Arizona* v. *California*;

(iii) actual and forecast quantities of active storage in Lake Mead and the Upper Basin Storage Reservoirs; and

(iv) estimated net inflow to Lake Mead.

(c) Shortage: The Secretary shall determine from time to time when insufficient mainstream water is available to satisfy annual consumptive use requirements of 7,500,000 acre-feet after consideration of all relevant factors, including, but not limited to, the following:

(i) the requirements stated in Article III(1) of these Operating Criteria;

(ii) actual and forecast quantities of active storage in Lake Mead;

(iii) estimate of net inflow to Lake Mead for the current year;

(iv) historic streamflows, including the most critical period of record;

(v) priorities set forth in Article II(A) of the decree in *Arizona* v. *California;* and

(vi) the purposes stated in Article I(2) of these Operating Criteria.

The shortage provisions of Article II(B)(3) of the decree in *Arizona* v. *California* shall thereupon become effective and consumptive uses from the mainstream shall be restricted to the extent determined by the Secretary to be required by section 301(b) of Public Law 90–537.

## IV. Definitions

(1) In addition to the definitions in section 606 of Public Law 90–537, the following shall also apply:

(a) ''Spills,'' as used in Article II(3)(c) herein, means water released from Lake Powell which cannot be utilized for project purposes, including, but not limited to, the generation of power and energy.

(b) ''Surplus,'' as used in Article III(3)(b) herein, is water which can be used to meet consumptive use [**demands**] in the three Lower Division States in excess of 7,500,000 acre-feet annually. The term ''surplus'' as used in these Operating Criteria is not to be construed as applied to, being interpretive of, or in any manner having reference to the term ''surplus'' in <**either**> the Colorado River Compact <**or the 1944 Mexican Treaty**>.

(c) ''Net inflow to Lake Mead,'' as used in Article III(3)(b)(iv) and (c)(iii) herein, represents the annual inflow to Lake Mead in excess of losses from Lake Mead.

(d) ''Available capability,'' used in Article II(4) herein, means that portion

of the total capacity of the powerplant that is physically available for generation.

*Synopsis of Comments and Responses:* Cited below is a synopsis of the comments received during the sixth review of the Operating Criteria and responses to those comments. The number(s) in parentheses following each comment refer(s) to the party that made the comment (please see the **SUPPLEMENTARY INFORMATION** section of this notice for a numbered list of the commenting parties).

*Comment No. 1*—(Letter No. 2): Reclamation must draft and implement the Operating Criteria in accordance with Federal law, which includes * * * treaties establishing Indian reservations and their reserved water rights. * * * Accordingly, the Quechan Tribe is extremely concerned that the Operating Criteria and its implementation not interfere with the tribe's senior perfected federal reserved water rights. * * * The tribe requests that Reclamation review its Operating Criteria in that light, and make any necessary modifications.

*Response:* The Operating Criteria do not affect the Quechan Tribe's senior water rights to use all of its Present Perfected Rights, including any additional rights granted in a supplemental decree. The Operating Criteria specifically state that they will be administered consistent with applicable federal laws. Some issues regarding the water rights of the Quechan Tribe are pending in active litigation before the United States Supreme Court in *Arizona* v. *California.* The Operating Criteria will be administered in a manner consistent with any further decisions from the Court in this regard. The Department of the Interior notes that the Court has established a priority date of January 9, 1884, for the federal reserved rights awarded to the tribe to date.

*Comment No. 2*—(Letter No. 2): The Quechan Tribe is also concerned that the Operating Criteria and its implementation not inappropriately facilitate, validate, or permanently secure use by others of Colorado River water that the tribe is not beneficially using. * * * Reclamation should therefore not designate water as ''surplus'' to the extent that such designation makes the water available for others.

*Response:* On an annual basis, determinations of availability of ''surplus'' water are made as part of the Annual Operating Plan process, and are based upon the Interim Surplus Guidelines adopted by the Secretary of the Interior (66 FR 7772–82). Determinations of ''surplus'' conditions are consistent with the provisions of Article II(B)(2) of the Decree entered by the United States Supreme Court in *Arizona* v. *California,* 376 U.S. 340, 342 (1964). The Department does not believe that the Operating Criteria or the Interim Surplus Guidelines inappropriately facilitate, validate, or permanently secure use by others of Colorado River water that the tribe is not using at this time. Nor does the Department believe that the Operating Criteria would preclude the tribe or any entitlement holder from using their Colorado River entitlement in the future. In short, the Operating Criteria do not alter the quantity or priority of tribal entitlements.

*Comment No. 3*—(Letter No. 2): The Quechan Tribe asks that Reclamation consider whether the present and future plans for tribal water marketing and banking mandate modification to the Operating Criteria, particularly in light of Reclamation's trust responsibilities to Indian tribes and their members.

*Response:* The Department does not believe that a change to the Operating Criteria is warranted due to any plans that the tribe may have with respect to future marketing and banking of tribal water. The Operating Criteria do not define nor will they alter the quantity or priority of tribal entitlements. The Operating Criteria provide for the coordinated long-range operation of the reservoirs constructed and operated under the authority of the Colorado River Storage Project Act and the Boulder Canyon Project Act for the purposes of complying with and carrying out the provisions of the Colorado River Compact, Upper Colorado River Basin Compact, and Mexican Water Treaty.

*Comment No. 4*—(Letter No. 2): The Quechan Tribe asks that Reclamation consider whether Arizona's and Nevada's full use of their allotments mandates modification to the Operating Criteria, particularly in light of Reclamation's trust responsibilities to Indian tribes and their members.

*Response:* The Department does not believe that a change to the Operating Criteria is warranted due to Arizona's and Nevada's current estimated use of Colorado River water. The Operating Criteria do not define nor will they alter state apportionments or the rights of individual entities to Colorado River water.

*Comment No. 5*—(Letter No. 2): The Quechan Tribe asks that Reclamation consider whether the overallocation of the Colorado River mandates modification to the Operating Criteria, particularly in light of Reclamation's trust responsibilities to Indian tribes and their members. Please note that the tribe has proposed a Tribal Accounting Pool in Lake Mead to allow undeveloped tribal waters to be tracked by an in-reservoir accounting system.

*Response:* The Department does not believe that a change to the Operating Criteria is warranted due to allocations of the Colorado River. The Operating Criteria implement and carry out the provisions of the Colorado River Compact, Upper Colorado River Basin Compact, and Mexican Water Treaty, as well as federal statutory law. These sources of the basin and state allocations to Colorado River water control Reclamation actions pursuant to the Operating Criteria. While annual yield calculations made early in the 20th century have been revised pursuant to additional data, the Operating Criteria do not define or alter any rights of individual entities to Colorado River water.

The Department acknowledges that the Ten Tribes Partnership (in comments to Reclamation on the Draft Interim Surplus Criteria Environmental Impact Statement) proposed the Tribal Accounting Pool (TAP) in Lake Mead. The TAP was a proposed methodology to track the amounts of undeveloped tribal water and determine the portion of surplus, normal, and shortage water delivered to other non-partnership Lower Basin users as a result of undeveloped Ten Tribes' water in the Lower Basin. The Department of the Interior did not include the TAP methodology as part of the Interim Surplus Guidelines and does not believe that revision of the Operating Criteria to include the TAP methodology is appropriate. See *e.g.*, U.S. Department of the Interior, Response to Ten Tribes Partnership, Interim Surplus Guidelines, Final Environmental Impact Statement, Volume III at page B–208 (Comment 13).

*Comment No. 6*—(Letter No. 2): The Quechan Tribe asks Reclamation to consider whether Reclamation should adopt the Operating Criteria as a rule, pursuant to the Administrative Procedure Act.

*Response:* The Administrative Procedure Act (APA) was originally enacted in 1946, was significantly amended in 1966, and has been subsequently modified by Congress. Primary purposes of the APA are (1) to require agencies to keep the public informed on organization, procedures, and rules; (2) to provide for public participation in the rulemaking process; (3) to prescribe uniform standards of conduct for rulemaking and adjudicatory proceedings; and (4) to

address judicial review of agency decisionmaking.

The APA addresses rulemaking. A ''rule'' is defined as: ''the whole or part of an agency statement of general or particular applicability and future effect designed to implement, interpret, or prescribe law or policy or describing the organization, procedure, or practice requirements of an agency * * *'' 5 U.S.C. 551(4). Rulemaking is usually referred to as either formal or informal. While developed pursuant to specific provisions of the Colorado River Basin Project Act, the review of the Operating Criteria should be categorized as informal rulemaking.

Consistent with the APA, Reclamation has provided for public participation and review of the Operating Criteria. Reclamation has developed a thorough administrative record. Notices regarding five-year reviews are also publicly noticed through the **Federal Register**. All comment letters received and notes from public meetings, as well as any analysis performed by Reclamation, are part of the public record. The public has been kept informed of the intent of the review and encouraged to participate. The Department believes that it is meeting the requirements of the APA and all actions are in accordance with applicable federal law.

*Comment No. 7*—(Letter No. 2): The Quechan Tribe is also concerned about the Operating Criteria's cumulative effects on the Colorado River and on its senior rights in the river when considered with the many other federal activities that affect the flow of the Colorado River.

*Response:* See response to Comments No. 1 and 2.

*Comment No. 8*—(Letter No. 2): The Quechan Tribe requests that Reclamation comply with the National Environmental Policy Act if it (1) modifies the Operating Criteria or (2) determines that application of the Operating Criteria has or will have significant adverse effects (short- or long-term) on the environment, the tribe's water rights, or the Fort Yuma Reservation.

*Response:* Reclamation complies with the National Environmental Policy Act (NEPA) with respect to its activities. In the past, Reclamation elected to utilize its NEPA process to evaluate the five-year review process and any proposed changes.

The Department is making a number of changes to the Operating Criteria through this notice that are editorial in nature. These changes fall into several categories: a minor textural addition, textural clarification of facts, and deletions of text referring to operational requirements and/or other events completed in the past. All of these editorial changes are administrative in nature and their implementation would not individually or cumulatively have a significant effect on the quality of the human environment or tribal resources. Reclamation has completed a Categorical Exclusion checklist supporting a Departmental Categorical Exclusion for this action.

*Comment No. 9*—(Letter No. 3): If there is no Quantification Settlement Agreement, Reclamation should review the Operating Criteria to better achieve the purposes of the 1922 Colorado River Compact.

*Response:* The Department of the Interior and the California entities completed the Quantification Settlement Agreement on October 10, 2003.

*Comment No. 10*—(Letter No. 4): National Park protection should be one of the factors considered in development of the annual plan of operation (Article I(2)), including provisions for any experimental flows necessary to meet the purposes of the Grand Canyon Protection Act.

*Response:* Article I of the Operating Criteria concerns the Annual Report. In Article I(2) it states: ''The plan of operation shall include such detailed rules and quantities as may be necessary and consistent with the criteria contained herein, and shall reflect appropriate consideration of the uses of the reservoirs for all purposes, including flood control, river regulation, beneficial consumptive uses, power production, water quality control, recreation, enhancement of fish and wildlife, and other environmental factors.'' Because the Operating Criteria are ''administered consistent with applicable Federal laws'' (which include the Grand Canyon Protection Act), National Park protection is already currently considered in the annual plan of operation under the existing Operating Criteria. See introductory paragraph of Operating Criteria. Moreover, Reclamation has promulgated Glen Canyon Operating Criteria (and operating plans) pursuant to the requirements of section 1804(b) and (c) of the Grand Canyon Protection Act that specifically address the applicable requirements of that Act. As provided in the Grand Canyon Protection Act, these Glen Canyon Operating Criteria (and operating plans) are ''separate from and in addition to those specified in section 602(b) of the Colorado River Basin Project Act of 1968.'' See Grand Canyon Protection Act at section 1804(c)(1)(A). The reference to section 602(b) is the statutory provision which requires preparation of the Colorado River Annual Plan of Operation referenced in Article I(2) of the Operating Criteria. Accordingly, the Department does not believe that it is necessary for the Operating Criteria to be specifically modified to reflect that fact.

*Comment No. 11*—(Letters No. 4 and 17): The Grand Canyon Protection Act should be specifically mentioned as one of the relevant factors to be considered in the operation of Upper Basin reservoirs (Article II(3)).

*Response:* The existing Operating Criteria contain language stating that the Operating Criteria are administered consistent with applicable federal laws, which by definition, includes the Grand Canyon Protection Act. The Grand Canyon Protection Act is not mentioned explicitly in Article II(3), but is considered in the context that it is an applicable federal law. In addition, see response to Comment No. 10.

*Comment No. 12*—(Letters No. 4 and 17): With provisions now in place for Beach/Habitat-Building Flows from Glen Canyon Dam, Article II(4) is no longer completely accurate as written. We propose the following rewording: ''Annual releases will be made through the powerplant to the extent practicable except when above powerplant capacity releases are determined by the Secretary, after giving consideration to other applicable factors, to be necessary to meet the provisions of the Grand Canyon Protection Act.''

*Response:* The scheduling of Beach/Habitat-Building Flows (BHBFs) from Glen Canyon Dam has been controversial since the mid-1990s. The preferred alternative in the Final Environmental Impact Statement for the Operation of Glen Canyon Dam called for BHBFs to take place when Lake Powell storage was low. The Colorado River Basin States expressed significant reservations with that approach. Subsequently, in the 1996 Record of Decision, the Secretary of the Interior adopted a strategy for scheduling BHBFs that was anticipated to apply during high-reservoir storage conditions and that was based to a greater extent on spill avoidance and dam safety considerations. Through the Glen Canyon Dam Adaptive Management Program (AMP), BHBF triggering criteria have been further defined based upon spill avoidance and dam safety. These BHBF triggering criteria are workable and consistent with the Operating Criteria.

In 2002, a sequence of experimental flows was recommended by the AMP. This AMP recommendation was forwarded to the Secretary for her consideration and was adopted in

November 2002. In this experimental flow sequence, one or more BHBFs may be made outside of the established BHBF triggering criteria. These experimental flows are considered test releases and will be made to advance the scientific knowledge of physical and biological process in the Grand Canyon ecosystem. The long-term implementation of BHBFs will continue to be carried out consistent with the Colorado River Storage Project Act, Colorado River Basin Project Act, and BHBF triggering criteria.

In November 2004, the first of these experimental flows that utilized releases greater than powerplant capacity was conducted. In this high-flow test, 41,000 cubic feet per second was released from Glen Canyon Dam for a period of 60 hours. The objective of the test was to evaluate the conservation of fine sediments that form beaches, riparian plant substrate, and endangered fish habitats. It will take approximately 18 months to fully evaluate the test.

*Comment No. 13*—(Letter No. 4): Under the Operation of Lake Mead, the National Park Service thinks that the Interim Surplus Criteria should replace the language in Article III(3)(b) defining ''Surplus.'' At least for the next 15 years, the Interim Surplus Criteria Record of Decision defines the relevant factors that the Secretary must consider in determining whether water quantities greater than ''normal'' are available for pumping or release from Lake Mead.

*Response:* The Department does not agree that Article III(3)(b) language should be updated to reflect adoption of the Interim Surplus Guidelines Record of Decision by the Secretary. The Department of the Interior specifically considered, and sought public input on, the concept of modifying Article III(3)(b) of the Operating Criteria during the process that led to adoption of the Interim Surplus Guidelines. See 64 FR 27010 (May 18, 1999). After reviewing the public comments received, the Department announced its intention to adopt ''interim implementing criteria pursuant to Article III(3) of the Long-Range Operating Criteria'' rather than modifying the actual text of the Operating Criteria. See 64 FR 68373 (December 7, 1999). This approach was carried through and set forth in the Record of Decision adopted by the Secretary. See 66 FR 7772, 7780 at section XI(5) (''These Guidelines, which shall implement and be used for determinations made pursuant to Article III(3)(b) of the [Operating Criteria] * * * are hereby adopted * * *'').

*Comment No. 14*—(Letters No. 4 and 6): The Department should begin a process for shortage determination.

*Response:* In the past year Reclamation has provided data and information regarding drought analysis and reservoir operations to representatives of the seven Colorado River Basin States, the Western Area Power Administration, and non-governmental organizations that have expressed an interest. Reclamation continues to monitor reservoir storage and basin hydrologic conditions and anticipates beginning a process in spring 2005 to evaluate alternatives regarding the development of shortage guidelines for the delivery of water to the three Lower Division States (Arizona, California, and Nevada).

*Comment No. 15*—(Letter No. 6): As noted in the January 15, 2002, **Federal Register** notice (67 FR 1986), the Secretary's consultation responsibilities have been specifically extended to encompass the general public. We recommend that this responsibility be reflected in the Operating Criteria by adding the phrase ''and the public'' to the end of the second introductory paragraph.

*Response:* The Department agrees that section 1804 of the Grand Canyon Protection Act specifically modifies Federal law applicable to the Operating Criteria, and by that Act, Congress extended the consultation process to encompass the general public. The Department has included a modification to reflect this responsibility.

*Comment No. 16*—(Letters No. 6 and 17): The Grand Canyon Protection Act (Pub. L. 102–575) charged the Secretary with operating Glen Canyon Dam ''in such a manner as to protect, mitigate impacts to, and improve the values for which Grand Canyon National Park and Glen Canyon National Recreation Area were established.'' We recommend that the protection and enhancement of these values be inserted as reservoir uses that are considered in developing the annual operating plan under Article I(2) of the Operating Criteria by adding the phrase ''protection of cultural resources'' after ''water quality control'' and before ''recreation'' and by adding the phrase ''protection and enhancement of fish and wildlife'' before ''and other environmental factors.''

*Response:* See response to Comment No. 10.

*Comment No. 17*—(Letter No. 6): Although the phrase ''recurrence of critical periods of water supply'' that is included in Article II(1)(d) may have been universally understood when the Operating Criteria were originally established, its meaning is unclear to us. We recommend that either a definition of this phrase be included in the definitions section or that the entire clause beginning with the word ''including'' be deleted.

*Response:* The term ''critical period'' is used twice in the Operating Criteria. A ''critical period'' is a general concept used in water supply planning representing a sequence of drier than average years with below normal runoff. Water supply management must account for these periods of below normal runoff and their ''recurrence'' to assure a consistent supply of water. As used in the context of Colorado River management, the phrase ''recurrence of critical periods'' means: the frequency at which critical periods (sequences of years with below normal runoff) have occurred in the past and are likely to recur in the future. The Department believes that the current language in the Operating Criteria is relevant and should remain in the Operating Criteria. The Department does not agree that this term requires a specific definition.

*Comment No. 18*—(Letter No. 6): We question whether the ''Report of the Committee on Probabilities and Test Studies to the Task Force on Operating Criteria for the Colorado River,'' dated October 30, 1969, which is referenced in Article II(1)(e) of the Operating Criteria, still has relevance in determining 602(a) Storage. We request either that Reclamation provide us with a copy of that report or a summary of it, or that Article II(1)(e) be deleted from the Operating Criteria.

*Response:* As requested, a copy of the ''Report of the Committee on Probabilities and Test Studies to the Task Force on Operating Criteria for the Colorado River'' has been made available on our Web site at *http://www.usbr.gov/lc/region/g4000/lroc.*

*Comment No. 19*—(Letters No. 6 and 17): The Secretary and her agencies are engaged in modification of river operations in various parts of the basin in order to meet their responsibilities under the Endangered Species Act. In order to reflect these changes, we recommend that a new subsection be added to Article II(1) that reads: ''Streamflow requirements of fish and wildlife, and other environmental values.''

*Response:* The Department notes that Article II(1) of the Operating Criteria is applicable to, and lists relevant factors for, determination of 602(a) Storage. The Operating Criteria are ''administered consistent with applicable Federal laws'' (which include the Endangered Species Act). See introductory paragraph of Operating Criteria. As with

other aspects of applicable federal law, the Endangered Species Act applies to proposed discretionary actions undertaken by federal agencies and its consideration is implicit in the existing Operating Criteria. Accordingly, the Department does not believe that it is necessary for the Operating Criteria to be modified.

*Comment No. 20*—(Letter No. 6): The last sentence in Article II(2) of the Operating Criteria refers to operations in 1971 and 1972, and is no longer relevant. We recommend that this sentence be deleted.

*Response:* The Department concurs with the recommendation. The references to operations in 1971 and 1972 are no longer relevant and the Department has deleted those sentences from the Operating Criteria.

*Comment No. 21*—(Letters No. 6 and 17): In recognition of the Secretary's responsibilities under the Grand Canyon Protection Act and the Endangered Species Act, we recommend that a new subsection (d) be added to Article II(3) that reads: ''to meet the requirements of the Grand Canyon Protection Act and the Endangered Species Act.''

*Response:* See response to Comments No. 11 and 19.

*Comment No. 22*—(Letter No. 6): Given that the Colorado River Storage Project Act lists generation of hydroelectric power as an incidental purpose for Glen Canyon Dam, and that the Record of Decision on the operation of Glen Canyon Dam interprets the mandates of the Grand Canyon Protection Act to allow bypass of water at the Glen Canyon Powerplant under limited conditions and for specified purposes, we suggest that the language in Article II(4) is not appropriate. We recommend that this section be deleted.

*Response:* Article II(4) specifies the method that water will be released from Lake Powell when such releases are needed in the application of Article II(3)(b) to maintain, as nearly as practicable, active storage in Lake Mead equal to the active storage in Lake Powell. The Glen Canyon Dam Record of Decision does not address spilling water released for storage equalization purposes. Article II(4), as written, is necessary in specifying how storage equalization releases from Lake Powell should be made.

*Comment No. 23*—(Letters No. 6 and 17): In recognition of the Secretary's responsibilities under the National Environmental Policy Act, the Endangered Species Act, as well as the Law of the River, we recommend inserting the following phrase at the beginning of Section III(1): ''Consistent with applicable federal laws, including but not limited to the National Environmental Policy Act and the Endangered Species Act.''

*Response:* The existing Operating Criteria contain language stating that the Operating Criteria are administered consistent with applicable federal laws, which by definition, includes the National Environmental Policy Act and the Endangered Species Act. In addition, see response to Comments No. 11 and 19.

*Comment No. 24*—(Letter No. 6): Article III(2) is no longer pertinent and we recommend that it be deleted.

*Response:* The Department agrees that Article III(2) is no longer pertinent since the Central Arizona Project began delivering water in 1985. The Department has deleted the language in Article III(2).

*Comment No. 25*—(Letter No. 6): To reflect the mandates of the Grand Canyon Protection Act within the universe of project purposes at Glen Canyon Dam, we recommend adding the phrase ''and the protection and enhancement of national park values in Grand Canyon National Park and/or Glen Canyon National Recreation Area'' at the end of Article IV(1)(a).

*Response:* The Department believes that Article IV(1)(a), as written, adequately defines spills. The language, as written, enables appropriate flexibility in the operation of Glen Canyon Dam to accomplish project purposes.

*Comment No. 26*—(Letter No. 6): Delete the word ''demands'' in Article IV(1)(b) of the Operating Criteria.

*Response:* To maintain consistency with Article III of the Operating Criteria and the 1964 Decree in *Arizona* v. *California*, the Department agrees that the word ''demands'' should be deleted in Article IV(1)(b). The Department has deleted the word ''demands'' from Article IV(1)(b).

*Comment No. 27*—(Letter No. 6): Since Article IV(1)(d) defines a term used solely in Section II(4), we recommend that it be deleted along with Article II(4).

*Response:* As Article II(4) remains relevant in the Operating Criteria (see response to Comment No. 22), Article IV(1)(d) needs to remain in the Operating Criteria. The term ''available capability,'' as defined in Article IV(1)(d), is used in Article II(4).

*Comment No. 28*—(Letter No. 6): The Interim Surplus Guidelines are having a negative effect on the Colorado delta.

*Response:* The Record of Decision for the Colorado River Interim Surplus Guidelines Final Environmental Impact Statement states that five-year reviews of the Interim Surplus Guidelines may be conducted, and if so, such reviews would be coordinated with the Operating Criteria review. The Interim Surplus Guidelines became effective in February 2001 and were first applied in the 2002 Annual Operating Plan. At this time, there is no need for a review of the Interim Surplus Guidelines. In the future, however, actual operating conditions may warrant a review of the Interim Surplus Guidelines.

*Comment No. 29*—(Letters No. 6 and 17): Conduct an environmental review of the Operating Criteria under the National Environmental Policy Act.

*Response:* See response to Comment No. 8.

*Comment No. 30*—(Letter No. 6): A Categorical Exclusion is arbitrary and capricious because the actual promulgation of the Operating Criteria has not been evaluated in a National Environmental Policy Act process.

*Response:* See response to Comment No. 8.

*Comment No. 31*—(Letter No. 16): The development and implementation process for the Interim Surplus Guidelines more than fulfilled the requirements for a five-year review. The Colorado River Basin States and the Secretary of the Interior have already agreed on how to operate the Colorado River for the next 15 years. The state of Utah does not see the need to spend time and resources on a review of the Operating Criteria.

*Response:* The Operating Criteria explicitly call for their own formal review at least every five years. The Department intends to follow the requirements of the Operating Criteria. The last review was completed with a **Federal Register** notice published on February 24, 1998 (63 FR 9256). The Interim Surplus Guidelines serve to implement Article III(3)(b) of the Operating Criteria. The Interim Surplus Guidelines may be reviewed concurrently with the five-year review of the Operating Criteria pursuant to Section 3 of the Interim Surplus Guidelines.

*Comment No. 32*—(Letters No. 1, 3, 5, 8, 9, 10, 11, 12, 13, 14, 15, 16, 23, and 27): No changes to the Operating Criteria are warranted at this time.

*Response:* The Secretary of the Interior has made a number of limited modifications to the Operating Criteria in this **Federal Register** notice. However, in making those modifications, the Secretary found that in all other respects the Operating Criteria continue to meet the purpose and goals for which they were developed and the requirements of section 602 of the 1968 Colorado River Basin Project Act. The Secretary

believes that neither the structure, format, nor content of the Operating Criteria require significant revisions as a result of actual operating experience. By this **Federal Register** notice, based on information submitted for review by the Department of the Interior, the Secretary has made a number of limited modifications to the text of the Operating Criteria. The bases for the changes are: (1) Specific change in Federal law applicable to the Operating Criteria, (2) language in the current text of the Operating Criteria that is outdated, and (3) specific modifications to Article IV(b) of the Operating Criteria that reflect actual operating experience.

*Comment No. 33*—(Letter No. 18): We do not object to the changes proposed in the **Federal Register** notice.

*Response:* Comment noted.

*Comment No. 34*—(Letter No. 18): The Upper Colorado River Commission does not endorse the assumption and objective in the Operating Criteria of a minimum release of water from Lake Powell of 8.23 million acre-feet every year. If such a number is used in the Operating Criteria, it must be understood that this is a planning objective which may be modified in the Annual Operating Plan (AOP) to reflect current conditions and in accordance with Colorado River Compact requirements. We remain concerned about the drought and depletion of storage at Lake Powell. It is imperative that the Operating Criteria be interpreted to have sufficient flexibility to allow for modifications in the AOP as needed to reflect critical conditions and Colorado River Compact requirements.

*Response:* Article III of the Colorado River Compact contains several provisions relating to the release of water from the Upper Basin to the Lower Basin. The specification of a minimum annual release objective from Glen Canyon Dam is found only in Article II(2) of the Operating Criteria which states that ''* * * the objective shall be to maintain a minimum release of water from Lake Powell of 8.23 million acre-feet * * *.''

Because the minimum annual release objective is higher than inflow during periods of drought, storage in Lake Powell is drawn down during a drought. The more severe the drought, the more significant the drawdown is at Lake Powell. Storage in Lake Powell recovers during normal or wet years. Lake Mead storage decreases during drought as well, but does so at a slower rate because of the presence of the minimum annual release objective from Lake Powell.

Representatives of the seven Colorado River Basin States, Reclamation, and the Western Area Power Administration are investigating impacts of prolonged drought where reducing the release from Lake Powell below the 8.23 million acre-foot per year objective would protect the minimum power pool at Lake Powell and the water supply for the Upper Division States of Colorado, New Mexico, Utah, and Wyoming. The 2005 Colorado River Annual Operating Plan (AOP) calls for an April 2005 mid-year review of the 2005 annual release amount from Lake Powell to determine if the runoff forecast warrants an adjustment to the annual release for water year 2005.

Determinations of Upper Basin annual deliveries (annual releases from Lake Powell) are made in the AOP. The AOP is prepared each year by the Department of the Interior through the Bureau of Reclamation in consultation with the seven Basin States Governors' representatives; the Upper Colorado River Commission; Native American tribes; appropriate federal agencies; representatives of the academic and scientific communities, environmental organizations, and the recreation industry; water delivery contractors; contractors for the purchase of federal power; others interested in Colorado River operations; and the general public through the Colorado River Management Work Group. The Department, through Reclamation, will continue to address issues related to low reservoir storage caused by drought in the AOP consultation process.

*Comment No. 35*—(Letter No. 18): Decisions regarding the timing for the next review should be left open.

*Response:* The Department has made no decision regarding the timing of the next review of the Operating Criteria.

*Comment No. 36*—(Letter No. 19): It is critical for the Operating Criteria for reservoir operations to uphold the intent of the 1922 Colorado River Compact. The Operating Criteria should be flexible and responsive to variations in hydrologic conditions, and should not jeopardize the interests of the Upper Basin.

*Response:* See response to Comment No. 34.

*Comment No. 37*—(Letter No. 19): The 1922 Colorado River Compact anticipating fluctuating hydrologic conditions specified Upper Basin water deliveries as a 10-year progressive series. We note that the existing Operating Criteria dictate the minimal annual release of 8.23 million acre-feet which is counter to Article III(d) of the 1922 Colorado River Compact.

*Response:* See response to Comment No. 34.

*Comment No. 38*—(Letter No. 19): We are also concerned that the Operating Criteria contain a requirement to equalize Lake Mead with Lake Powell during times of Upper Basin water surpluses, but that there are no provisions to equalize the level of Lake Powell with Lake Mead during times of Upper Basin drought for so long as the Upper Basin is conditionally satisfying its 10-year water delivery obligations.

*Response:* Article II(3) of the Operating Criteria contains a requirement that releases greater than 8.23 million acre-feet be made only when reservoir storage in the Upper Basin is greater than 602(a) Storage. Article II(1) of the Operating Criteria describes 602(a) Storage.

There is no provision in the Operating Criteria to equalize the level of Lake Powell with Lake Mead during times of drought when reservoir storage in Lake Powell is lower than Lake Mead. However, river simulation modeling of the Colorado River system shows that in the future there will be times when Lake Powell storage will be greater than Lake Mead. This will occur because of the application of 602(a) Storage provisions. See Colorado River Basin Project Act at section 602(a). Following a drought, the 602(a) Storage provision in the Operating Criteria allows Lake Powell to refill to a level sufficient to protect the Upper Basin from future droughts. Releases greater than the objective minimum are not made from Lake Powell until this level of storage is achieved. It is likely that when the current drought comes to an end, during a year (or series of years) with above average inflow to Lake Powell, reservoir storage in Lake Powell will exceed that of Lake Mead.

In 2004, an Interim 602(a) Storage Guideline was adopted that set 14.85 million acre-feet of storage (elevation 3,630 feet) at Lake Powell as the minimum level for 602(a) Storage through the year 2016. See 69 FR 28945 (May 19, 2004). Under this interim guideline, releases greater than the minimum objective release will not be made when Lake Powell is projected to be below elevation 3,630 feet. Thus, while Lake Powell storage decreases faster than Lake Mead during periods of drought, the 602(a) Storage provision allows Lake Powell storage to rebound quicker than Lake Mead when there is a return to average or wetter than average hydrology. In addition, see response to Comment No. 34.

*Comment No. 39*—(Letter No. 19): Presently, there exists a large imbalance between the water volumes in Lake Mead and Lake Powell (14.3 million acre-feet to 8.8 million acre-feet), which

has jeopardized the interests of the Upper Basin and put at risk the future generation of hydroelectric power at Glen Canyon Dam.

*Response:* The severity of the drought over the past five years in combination with the objective to maintain a minimum release of 8.23 million acre-feet has caused a significant drawdown of Lake Powell. The minimum release objective contained in the Operating Criteria results in Lake Powell storage decreasing during periods of drought. From 1988 through 1992, there was a five-year drought in the Colorado River Basin and the water surface elevation of Lake Powell decreased by 89 feet. The drought of the past five years (2000–2004) is more severe than the drought that occurred from 1988 to 1992. Records show the current drought to be the most severe five-year drought in the Colorado River Basin in over 100 years of recordkeeping. Because of this, Lake Powell has experienced a significant reduction in storage.

Elevation 3,490 feet at Lake Powell has been identified as the minimum level at which hydropower can be generated at Lake Powell. The river bypass tubes at Glen Canyon Dam can release water as low as elevation 3,370 feet, but no hydropower can be generated by the release of water through the river bypass tubes. Elevation 3,370 feet is the lowest elevation at which water can be released from Lake Powell. Between elevations 3,490 feet and 3,370 feet, there is four million acre-feet of storage. The Operating Criteria do not reference these elevations at Lake Powell. Previous river simulation modeling of the Colorado River system performed by Reclamation showed no occurrences of Lake Powell reaching 3,490 feet in the next 50 years when subject to the most severe droughts of the 20th century. However, since the current five-year drought is worse than any of the 20th century droughts, there is now some risk that Lake Powell could reach minimum power pool (elevation 3,490 feet) under a scenario of continued drought in combination with the continuation of the minimum release objective from Lake Powell. The Department will continue to address the issue of low reservoir storage at Lake Powell in the Annual Operating Plan consultation process. In addition, see response to Comments No. 34 and 38.

*Comment No. 40*—(Letter No. 19): Over the past 10 years, the Upper Basin has delivered more than 100 million acre-feet of water to the Lower Basin, which now in combination with drought conditions has prejudiced the interests of the Upper Basin.

*Response:* During the past 10-year period (water years 1995–2004), over 100 million acre-feet has flowed past Lee Ferry. The majority of this flow occurred during the five-year period of 1995 through 1999 which was a period with above average flow on the Colorado River. In July 1999, Lake Powell storage was 97 percent of capacity. During the five-year period of 1995 to 1999, 59.5 million acre-feet flowed past Lee Ferry, with reservoirs throughout the Upper Colorado River Basin, including Lake Powell, releasing excess water because they were full. Release of this water from Lake Powell was necessary because of the physical storage limitation of Lake Powell and dam safety considerations. During the past five years, the objective in the operation of Lake Powell has been to release 8.23 million acre-feet per year, consistent with the Operating Criteria. It should also be noted that during the late 1990s, flood control releases were taking place from Lake Mead in the Lower Basin resulting in a significant volume of water, approximately 5 million acre-feet, being released from Lake Mead in excess of Lower Basin demands. In addition, see response to Comment No. 34.

*Comment No. 41*—(Letter No. 19): The existing Operating Criteria need clarification that the minimal objective release of 8.23 million acre-feet stated in the Operating Criteria is an ''operating target'' which is subject to revision in the Annual Operating Plan process.

*Response:* See response to Comment No. 34.

*Comment No. 42*—(Letter No. 19): The Friends of Lake Powell strongly endorse the Annual Operating Plan process. Furthermore, we believe that operation of the Colorado River reservoirs can be optimized with each Basin sharing more equitably in the burden of drought. This would be best accomplished by maintaining, as equally as practicable, the active water stored in Lake Powell and Lake Mead (for so long as Upper Basin 10-year water delivery obligations are satisfied).

*Response:* Under the Operating Criteria, Lake Powell storage drops below Lake Mead storage during periods of drought. When there is a return to average or above average inflow, Lake Powell storage recovers faster than storage recovers in Lake Mead. The 602(a) Storage requirement allows water storage in Lake Powell to be greater than water storage in Lake Mead in the period following a drought. Maintaining storage equal in Lake Powell and Lake Mead as an operating strategy would be counter to the 602(a) Storage requirement and could put the Upper Basin at risk of not having enough water in storage for future droughts. The Department will continue to address low reservoir storage caused by drought in the Annual Operating Plan consultation process. In addition, see response to Comments No. 34 and 38.

*Comment No. 43*—(Letter No. 20): The Operating Criteria of Glen Canyon Dam need to be revisited. When all needs are considered, it would be better to treat Lakes Mead and Powell more similarly, or better yet, to apply your normal system Operating Criteria to the operation of Glen Canyon Dam.

*Response:* See response to Comments No. 34, 38, and 42.

*Comment No. 44*—(Letter No. 21): The technical changes proposed in the current Operating Criteria review seem to make sense in order to keep the document current with regards to updated legislation and rules.

*Response:* Comment noted.

*Comment No. 45*—(Letter No. 21): With the current drought and the ongoing discussions by the seven Colorado River Basin States as to how to cope with low storage levels in the system, it would be appropriate for this review of the Operating Criteria to serve as the current review for at least the next five years. During this time, the seven Basin States will be working together to provide additional guidelines dealing with shortages. Similar to the Interim Surplus Guidelines process, if and when shortage guidelines are agreed to and given time to develop operational experience, it would be appropriate to again review the Operating Criteria.

*Response:* See response to Comment No. 35.

*Comment No. 46*—(Letter No. 22): Page Electric Utility strongly believes that the water level of Lake Powell should be maintained at or above elevation 3,490 feet to maintain the minimum power pool.

*Response:* See response to Comments No. 34 and 39.

*Comment No. 47*—(Letter No. 23): We have no objections to the proposed removal of obsolete provisions in the Operating Criteria.

*Response:* Comment noted.

*Comment No. 48*—(Letter No. 23): An amount less than the minimum release objective may be released from Lake Powell, if the states of the Upper Division are in compliance with Article III(d) of the Colorado River Compact, in order to avoid impairment or potential impairment of the beneficial consumptive use of water in any Upper Division State.

*Response:* See response to Comment No. 34.

*Comment No. 49*—(Letter No. 23): The Operating Criteria have been flexible enough to allow for adjustments following the floods of the 1980s, they have been flexible enough to allow for the development of the interim operating criteria to aid California in reducing its use of Colorado River water to 4.4 million acre-feet per year, and they have been flexible enough to allow for experimental flow tests from Glen Canyon Dam in 1996 and again in 2004. All these were accomplished within the limitations provided by the Colorado River Compact, the Upper Colorado River Basin Compact, and the Mexican Water Treaty. The Operating Criteria cannot be used to modify these basic documents, as some would suggest.

*Response:* The Department concurs. The Operating Criteria cannot be used to modify the Colorado River Compact, the Upper Colorado River Basin Compact, or the Mexican Water Treaty.

*Comment No. 50*—(Letter No. 24): The Operating Criteria should meet the intent of the 1922 Colorado River Compact, yet be flexible enough to take into consideration variations in hydrologic conditions and drought.

*Response:* The Operating Criteria were developed to provide sufficient flexibility in the operation of Colorado River reservoirs while meeting the requirements of interstate compacts, federal laws, treaties, decrees, and regulations germane to the Colorado River. Over the past 34 years, the Operating Criteria have provided the flexibility to properly manage the Colorado River through periods of average, above average, and below average inflow.

*Comment No. 51*—(Letter No. 24): The 1922 Colorado River Compact intended for a flexible water delivery schedule based on 10-year averages. The existing Operating Criteria appear to dictate a minimal release that does not consider drought conditions.

*Response:* See response to Comment No. 34.

*Comment No. 52*—(Letter No. 24): A new minimal annual release given current conditions should be considered in the 6.5 to 7 million acre-foot range for the stabilization of both reservoirs.

*Response:* See response to Comments No. 34 and 38.

*Comment No. 53*—(Letter No. 24): The cost effective generation of hydroelectric power should not be jeopardized at Glen Canyon Dam; therefore, a minimum lake elevation should be established at Lake Powell.

*Response:* See response to Comments No. 34, 38, and 39.

*Comment No. 54*—(Letter No. 25): The following changes should be made to the Operating Criteria: In Article I(2), after the word, ''recreation,'' add the phrase, ''protection of Grand Canyon National Park and Glen Canyon National Recreation Area.''

Add the following paragraph as Article II(6): ''In the application of Article II, Glen Canyon Dam will be operated and releases from Lake Powell made in accordance with the Grand Canyon Protection Act in order to protect, mitigate adverse impacts to, and improve the values for which Grand Canyon National Park and Glen Canyon National recreation Area were established. Annual releases will be made through the powerplant to the extent practicable except when above-powerplant releases are determined by the Secretary to be necessary to meet the provisions of the Grand Canyon Protection Act. Water releases pursuant to this paragraph will not affect allocations of water secured to the Colorado River Basin States by any compact, law, or decree.''

In Section IV(1)(a), after the phrase, ''power and energy,'' add the phrase, ''and protection of natural and cultural resources in Grand Canyon National Park and Glen Canyon Recreation Area.''

*Response:* See response to Comments No. 10, 11, and 12.

*Comment No. 55*—(Letter No. 26): The Metropolitan Water District of Southern California (Metropolitan) urges Reclamation not to commit to a five-year hiatus in beginning the next review of the Operating Criteria. A five-year hiatus prior to beginning the next review would amount to an eight-year period between reviews, while the Operating Criteria commit to a review at least every five years. Metropolitan believes that Reclamation should leave open the date that the next review will commence, basing that date instead upon actual operating experience or unforeseen circumstances.

*Response:* See response to Comment No. 35.

*Comment No. 56*—(Letter No. 27): The Colorado River Board of California (Board), in its March 2002 letter, indicated that there was a need to provide additional specificity to provide guidance as the Annual Operating Plan (AOP) is developed. This specificity is needed to address reservoir operations over the full range of expected operations and include releases during high water events and conditions, as well as, during low water conditions and shortages. Although there was an identified need to provide sufficient detail and substance to guide development of the AOP, there is a greater need to bring this five-year review to a conclusion within this five-year review period. Accordingly, the Board finds that Reclamation's proposed modifications to the Operating Criteria are acceptable. It is the Board's position that consideration of any substantive modifications to the Operating Criteria should be delayed until the next review is undertaken.

*Response:* Comment noted.

*Comment No. 57*—(Letter No. 27): It is unclear from the **Federal Register** notice whether Reclamation plans in some way to note for the reader that certain text has been inserted or deleted through this review. As such, it is recommended that additions and deletions to the text of the Operating Criteria be noted in footnotes to the Operating Criteria.

*Response:* The Department will denote additions and deletions to the text of the Operating Criteria using a combination of text strikeout, bolding, less than or greater than signs, and/or brackets.

*Comment No. 58*—(Letter No. 27): At the public meeting held in Henderson, Nevada, on November 19, 2004, Reclamation staff indicated an intent that the next review not begin until five years after the current review is concluded. Such a schedule would depart from the review process required by the Colorado River Basin Project Act of 1968. No such intent should be specified in a final decision regarding the current review. A decision regarding the timing of the beginning of the next review should be left open as it may be necessary to begin the next review prior to the time suggested at the public hearing.

*Response:* See response to Comment No. 35.

**Public Consultation Meeting—November 19, 2004**

Reclamation conducted a public consultation meeting in Henderson, Nevada, on November 19, 2004. Two attendees provided oral comments at the meeting. A summary of the comments made and responses to those comments is as follows:

*Kara Gillon— Defenders of Wildlife:* Why were no changes proposed to the Operating Criteria to reflect the Grand Canyon Protection Act? Will Reclamation conduct National Environmental Policy Act compliance to the proposed changes?

*Response:* See response to Comments No. 8, 10, 11, 12, and 15.

*Jerry Zimmerman*—Colorado River Board of California: The Colorado River Board of California (Board) previously sent in a letter that stated that there is no need to change the Operating Criteria. The Operating Criteria need to

provide specificity on operations over a full range of water conditions. Specificity on shortage and surplus and on deliveries to the United States and Mexico is needed in the Operating Criteria. This specificity would help in the development of the Annual Operating Plan each year. The Board finds the proposed changes acceptable and that the current review needs to be completed soon. Substantive changes should be included in the next review. The Board will also be providing written comments.

*Response:* See response to Comments No. 56 and 58.

*Final Decision:* After a careful review of all comments received, and after formal consultation with the Governor's representatives of the seven Basin States, tribal representatives, and interested parties and stakeholders, the Secretary of the Interior has made a number of limited modifications to the text of the Operating Criteria. However, in making those modifications, the Secretary found that in all other respects the Operating Criteria continue to meet the purpose and goals for which they were developed and the requirements of Section 602 of the 1968 Colorado River Basin Project Act. The Secretary believes that neither the structure, format, nor content of the Operating Criteria require significant revisions as a result of actual operating experience. The bases for the changes are: (1) Specific change in Federal law applicable to the Operating Criteria, (2) language in the current text of the Operating Criteria that is outdated, and (3) specific modifications to Article IV(b) of the Operating Criteria that reflect actual operating experience.

Dated: March 21, 2005.

**Gale A. Norton,**

*Secretary, Department of the Interior.*

[FR Doc. 05–6160 Filed 3–28–05; 8:45 am]

**BILLING CODE 4310–MN–P**

## INTERNATIONAL TRADE COMMISSION

**[Inv. No. 337–TA–534]**

### In the Matter of Certain Color Television Receivers and Color Display Monitors, and Components Thereof; Notice of Investigation

**AGENCY:** U.S. International Trade Commission.

**ACTION:** Institution of investigation pursuant to 19 U.S.C. 1337.

**SUMMARY:** Notice is hereby given that a complaint was filed with the U.S. International Trade Commission on February 24, 2005, under section 337 of the Tariff Act of 1930, as amended, 19 U.S.C. 1337, on behalf of Thomson Licensing S.A. of Boulogne, France, and Thomson Licensing Inc. of Princeton, New Jersey. A letter supplementing the complaint was filed on March 18, 2005. The complaint, as supplemented, alleges violations of section 337 in the importation into the United States, the sale for importation, and the sale within the United States after importation of certain color television receivers and color display monitors, and components thereof, by reason of infringement of claims 1 and 3 of U.S. Patent No. 4,836,651, claim 1 of U.S. Patent No. 5,041,888, claims 1, 5, and 7 of U.S. Patent No. 5,153,754, claims 1, 3, 5, and 6 of U.S. Patent No. 5,389,893, and claims 1 and 2 of U.S. Patent No. 5,452,195. The complaint further alleges that an industry in the United States exists as required by subsection (a)(2) of section 337.

The complainants request that the Commission institute an investigation and, after the investigation, issue a permanent exclusion order and permanent cease and desist orders.

**ADDRESSES:** The complaint and supplement, except for any confidential information contained therein, are available for inspection during official business hours (8:45 a.m. to 5:15 p.m.) in the Office of the Secretary, U.S. International Trade Commission, 500 E Street, SW., Room 112, Washington, D.C. 20436, telephone 202–205–2000. Hearing impaired individuals are advised that information on this matter can be obtained by contacting the Commission's TDD terminal on 202–205–1810. Persons with mobility impairments who will need special assistance in gaining access to the Commission should contact the Office of the Secretary at 202–205–2000. General information concerning the Commission may be obtained by accessing its Internet server (*http://www.usitc.gov*). The public record for this investigation may be viewed on the Commission's electronic docket (EDIS) at *http://edis.usitc.gov.*

**FOR FURTHER INFORMATION CONTACT:** Steven R. Pedersen, Esq., Office of Unfair Import Investigations, U.S. International Trade Commission, telephone 202–205–2781.

**Authority:** The authority for institution of this investigation is contained in section 337 of the Tariff Act of 1930, as amended, and in section 210.10 of the Commission's Rules of Practice and Procedure, 19 CFR 210.10 (2004).

*Scope of Investigation:* Having considered the complaint, the U.S. International Trade Commission, on March 18, 2005, *ordered that*—

(1) Pursuant to subsection (b) of section 337 of the Tariff Act of 1930, as amended, an investigation be instituted to determine whether there is a violation of subsection (a)(1)(B) of section 337 in the importation into the United States, the sale for importation, or the sale within the United States after importation of certain color television receivers or color display monitors, or components thereof, by reason of infringement of claim 1 or 3 of U.S. Patent No. 4,836,651, claim 1 of U.S. Patent No. 5,041,888, claim 1, 5, or 7 of U.S. Patent No. 5,153,754, claim 1, 3, 5, or 6 of U.S. Patent No. 5,389,893, or claim 1 or 2 of U.S. Patent No. 5,452,195, and whether an industry in the United States exists as required by subsection (a)(2) of section 337.

(2) For the purpose of the investigation so instituted, the following are hereby named as parties upon which this notice of investigation shall be served:

(a) The complainants are—

Thomson Licensing S.A., 46 quai Alphonse Le Gallo, 92648 Boulogne, France.

Thomson Licensing Inc., 2 Independence Way, Princeton, NJ 08540.

(b) The respondents are the following companies alleged to be in violation of section 337, and are the parties upon which the complaint is to be served:

BenQ Corp., 157 Shan-Ying Rd., Gueishan, Taoyuan 333, Taiwan.

BenQ Optronics (Suzhou) Co., Ltd., 169 Zhujiang Rd., New District, Suzhou, Jiangsu, China 215011.

BenQ America Corp., 53 Discovery, Irvine, California 92618.

AU Optronics Corp., No. 1, Li-Hsin Road 2, Science-Based Industrial Park, Hsinchu 300, Taiwan.

(c) Steven R. Pedersen, Esq., Office of Unfair Import Investigations, U.S. International Trade Commission, 500 E Street, SW., Suite 401, Washington, DC 20436, who shall be the Commission investigative attorney, party to this investigation; and

(3) For the investigation so instituted, the Honorable Robert L. Barton, Jr. is designated as the presiding administrative law judge.

Responses to the complaint and the notice of investigation must be submitted by the named respondents in accordance with section 210.13 of the Commission's Rules of Practice and Procedure, 19 CFR 210.13. Pursuant to 19 CFR 201.16(d) and 210.13(a), such responses will be considered by the Commission if received no later than 20

days after the date of service by the Commission of the complaint and the notice of investigation. Extensions of time for submitting responses to the complaint will not be granted unless good cause therefor is shown.

Failure of a respondent to file a timely response to each allegation in the complaint and in this notice may be deemed to constitute a waiver of the right to appear and contest the allegations of the complaint and to authorize the administrative law judge and the Commission, without further notice to that respondent, to find the facts to be as alleged in the complaint and this notice and to enter both an initial determination and a final determination containing such findings, and may result in the issuance of a limited exclusion order or a cease and desist order or both directed against that respondent.

By order of the Commission.

Issued: March 23, 2005.

**Marilyn R. Abbott,**

*Secretary to the Commission.*

[FR Doc. 05–6126 Filed 3–28–05; 8:45 am]

BILLING CODE 7020–02–P

## INTERNATIONAL TRADE COMMISSION

**[Investigation No. 731–TA–326 (Second Review)]**

## Frozen Concentrated Orange Juice From Brazil Determination

On the basis of the record [1] developed in the subject five-year review, the United States International Trade Commission (Commission) determines, pursuant to section 751(c) of the Tariff Act of 1930 (19 U.S.C. 1675(c)) (the Act), that revocation of the antidumping duty order on frozen concentrated orange juice from Brazil would not be likely to lead to continuation or recurrence of material injury to an industry in the United States within a reasonably foreseeable time.

### Background

The Commission instituted this review on April 1, 2004 (69 FR 17230) and determined on July 6, 2004 that it would conduct a full review (69 FR 44060, July 23, 2004). Notice of the scheduling of the Commission's review and of a public hearing to be held in connection therewith was given by posting copies of the notice in the Office of the Secretary, U.S. International Trade Commission, Washington, DC, and by publishing the notice in the **Federal Register** on August 20, 2004 (69 FR 51711). The hearing was held in Washington, DC, on February 1, 2005, and all persons who requested the opportunity were permitted to appear in person or by counsel.

The Commission transmitted its determination in this review to the Secretary of Commerce on March 28, 2005. The views of the Commission are contained in USITC Publication 3760 (March 2005), entitled Frozen Concentrated Orange Juice from Brazil: Investigation No. 731–TA–326 (Second Review).

Issued: March 24, 2005.

By order of the Commission.

**Marilyn R. Abbott,**

*Secretary to the Commission.*

[FR Doc. 05–6166 Filed 3–28–05; 8:45 am]

BILLING CODE 7020–02–P

## INTERNATIONAL TRADE COMMISSION

**[Investigation No. 701–TA–440 (Final)]**

## Polyethylene Terephthalate (''PET'') Resin From Thailand

**AGENCY:** United States International Trade Commission.

**ACTION:** Termination of investigation.

**SUMMARY:** On March 21, 2005, the Department of Commerce published notice in the **Federal Register** of a negative final determination of subsidies in connection with the subject investigation (70 FR 13462). Accordingly, pursuant to section 207.40(a) of the Commission's Rules of Practice and Procedure (19 CFR 207.40(a)), the countervailing duty investigation concerning PET resin from Thailand (investigation No. 701–TA–440 (Final)) is terminated.

**EFFECTIVE DATE:** March 21, 2005.

**FOR FURTHER INFORMATION CONTACT:** Russell Duncan (202–708–4727), Office of Investigations, U.S. International Trade Commission, 500 E Street, SW., Washington, DC 20436. Hearing-impaired individuals are advised that information on this matter can be obtained by contacting the Commission's TDD terminal on 202–205–1810. Persons with mobility impairments who will need special assistance in gaining access to the Commission should contact the Office of the Secretary at 202–205–2000. General information concerning the Commission may also be obtained by accessing its Internet server *(http://www.usitc.gov).* The public record for this investigation may be viewed on the Commission's electronic docket (EDIS) at *http://edis.usitc.gov.*

**Authority:** This investigation is being terminated under authority of title VII of the Tariff Act of 1930; this notice is published pursuant to section 201.10 of the Commission's rules (19 CFR 201.10).

By order of the Commission.

Issued: March 24, 2005.

**Marilyn R. Abbott,**

*Secretary to the Commission.*

[FR Doc. 05–6127 Filed 3–28–05; 8:45 am]

BILLING CODE 7020–02–P

## INTERNATIONAL TRADE COMMISSION

**[Investigation No. 731–TA–1079 (Final)]**

## Polyethylene Terephthalate (''PET'') Resin From Taiwan

**AGENCY:** United States International Trade Commission.

**ACTION:** Termination of investigation.

**SUMMARY:** On March 21, 2005, the Department of Commerce published notice in the **Federal Register** of a final determination of sales at not less than fair value in connection with the subject investigation (70 FR 13454). Accordingly, pursuant to section 207.40(a) of the Commission's Rules of Practice and Procedure (19 CFR 207.40(a)), the antidumping duty investigation concerning PET resin from Taiwan (investigation No. 731-TA–1079 (Final)) is terminated.

**DATES:** Effective Date: March 21, 2005.

**FOR FURTHER INFORMATION CONTACT:** Russell Duncan (202–708–4727), Office of Investigations, U.S. International Trade Commission, 500 E Street SW., Washington, DC 20436. Hearing-impaired individuals are advised that information on this matter can be obtained by contacting the Commission's TDD terminal on 202–205–1810. Persons with mobility impairments who will need special assistance in gaining access to the Commission should contact the Office of the Secretary at 202–205–2000. General information concerning the Commission may also be obtained by accessing its Internet server *(http://www.usitc.gov).* The public record for this investigation may be viewed on the Commission's electronic docket (EDIS) at *http://edis.usitc.gov.*

**Authority:** This investigation is being terminated under authority of title VII of the Tariff Act of 1930; this notice is published pursuant to section 201.10 of the Commission's rules (19 CFR 201.10).

By order of the Commission.

[1] The record is defined in sec. 207.2(f) of the Commission's Rules of Practice and Procedure (19 CFR 207.2(f)).

Issued: March 24, 2005.

**Marilyn R. Abbott,**

*Secretary to the Commission.*

[FR Doc. 05–6128 Filed 3–28–05; 8:45 am]

**BILLING CODE 7020–02–P**

## INTERNATIONAL TRADE COMMISSION

**[Inv. No. 337–TA–533]**

### In the Matter of Certain Rubber Antidegradants, Components Thereof, and Products Containing Same; Notice of Investigation

**AGENCY:** U.S. International Trade Commission.

**ACTION:** Institution of investigation pursuant to 19 U.S.C. 1337.

**SUMMARY:** Notice is hereby given that a complaint was filed with the U.S. International Trade Commission on February 23, 2005, under section 337 of the Tariff Act of 1930, as amended, 19 U.S.C. 1337, on behalf of Flexsys America LP. A supplement to the complaint was filed on March 10, 2005. The complaint, as supplemented, alleges violations of section 337 in the importation into the United States, the sale for importation, and the sale within the United States after importation of certain rubber antidegradants, components thereof, and products containing same that infringe claims 30 and 61 of U.S. Patent No. 5,117,063, claims 7 and 11 of U.S. Patent No. 5,608,111, and claims 1, 32, and 40 of U.S. Patent No. 6,140,538. The complaint further alleges that an industry in the United States exists as required by subsection (a)(2) of section 337.

The complainant requests that the Commission institute an investigation and, after the investigation, issue a permanent exclusion order and permanent cease and desist orders.

**ADDRESSES:** The complaint, except for any confidential information contained therein, is available for inspection during official business hours (8:45 a.m. to 5:15 p.m.) in the Office of the Secretary, U.S. International Trade Commission, 500 E Street, SW., Room 112, Washington, DC 20436, telephone 202–205–2000. Hearing impaired individuals are advised that information on this matter can be obtained by contacting the Commission's TDD terminal on 202–205–1810. Persons with mobility impairments who will need special assistance in gaining access to the Commission should contact the Office of the Secretary at 202–205–2000. General information concerning the Commission may also be obtained by accessing its Internet server at *http://www.usitc.gov.* The public record for this investigation may be viewed on the Commission's electronic docket imaging system (EDIS) at *http://edis.usitc.gov.*

**FOR FURTHER INFORMATION CONTACT:** Juan Cockburn, Esq., Office of Unfair Import Investigations, U.S. International Trade Commission, telephone 202–205–2572.

**Authority:** The authority for institution of this investigation is contained in section 337 of the Tariff Act of 1930, as amended, and in section 210.10 of the Commission's Rules of Practice and Procedure, 19 CFR 210.10 (2004).

*Scope of Investigation:* Having considered the complaint, the U.S. International Trade Commission, on March 22, 2005, *ordered that*—

(1) Pursuant to subsection (b) of section 337 of the Tariff Act of 1930, as amended, an investigation be instituted to determine whether there is a violation of subsection (a)(1)(B) of section 337 in the importation into the United States, the sale for importation, or the sale within the United States after importation of certain rubber antidegradants, components thereof, or products containing same by reason of infringement of claims 30 or 61 of U.S. Patent No. 5,117,063, claims 7 or 11 of U.S. Patent No. 5,608,111, or claims 1, 32, or 40 of U.S. Patent No. 6,140,538, and whether an industry in the United States exists as required by subsection (a)(2) of section 337.

(2) For the purpose of the investigation so instituted, the following are hereby named as parties upon which this notice of investigation shall be served:

(a) The complainant is—Flexsys America LP, 260 Springside Drive, Akron, Ohio 44334–0444.

(b) The respondents are the following companies alleged to be in violation of section 337, and are parties upon which the complaint is to be served:

Sinorgchem Co., Shandong, No. 1, Beihuan Road, Caoxian, Shandong, China 274400.

Korea Kumho Petrochemical Co., Ltd., 15/16F Kumho-Asiana Building, # 57, 1-ga, Shinmum-Ro, Jongro-Gu, Seoul, Korea.

Sovereign Chemical Company, 341 White Pond Drive, Akron, Ohio 44320.

Vilax Corporation, 33 Roberts Street, Rockaway, New Jersey 07866.

Stolt-Nielsen Transportation Group Ltd., 8 Sound Shore Drive, Greenwich, Connecticut 06830.

(c) Juan Cockburn, Esq., Office of Unfair Import Investigations, U.S. International Trade Commission, 500 E Street, SW., Suite 401, Washington, DC 20436, who shall be the Commission investigative attorney, party to this investigation; and

(3) For the investigation so instituted, the Honorable Paul J. Luckern is designated as the presiding administrative law judge.

Responses to the complaint and the notice of investigation must be submitted by the named respondents in accordance with section 210.13 of the Commission's Rules of Practice and Procedure, 19 CFR 210.13. Pursuant to 19 CFR 201.16(d) and 210.13(a), such responses will be considered by the Commission if received not later than 20 days after the date of service by the Commission of the complaint and the notice of investigation. Extensions of time for submitting responses to the complaint and the notice of investigation will not be granted unless good cause therefor is shown.

Failure of a respondent to file a timely response to each allegation in the complaint and in this notice may be deemed to constitute a waiver of the right to appear and contest the allegations of the complaint and this notice, and to authorize the administrative law judge and the Commission, without further notice to the respondent, to find the facts to be as alleged in the complaint and this notice and to enter a final determination containing such findings, and may result in the issuance of a limited exclusion order or cease and desist order or both directed against such respondent.

By order of the Commission.

Issued: March 23, 2005.

**Marilyn R. Abbott,**

*Secretary to the Commission.*

[FR Doc. 05–6125 Filed 3–28–05; 8:45 am]

**BILLING CODE 7020–02–P**

## INTERNATIONAL TRADE COMMISSION

**[USITC SE–05–010]**

### Government in the Sunshine Act Meeting Notice

**AGENCY HOLDING THE MEETING:** United States International Trade Commission.

**TIME AND DATE:** April 13, 2005, at 11 a.m.

**PLACE:** Room 101, 500 E Street, SW., Washington, DC 20436, telephone: (202) 205–2000.

**STATUS:** Open to the public.

**MATTERS TO BE CONSIDERED:**

1. Agenda for future meetings: none.
2. Minutes.
3. Ratification List.

4. Inv. No. 731–TA–125 (Second Review) (Potassium Permanganate from China)—briefing and vote. (The Commission is currently scheduled to transmit its determination and Commissioners' opinions to the Secretary of Commerce on or before April 27, 2005.)
5. Inv. Nos. 701–TA–439 and 731–TA–1077, 1078, and 1080 (Final) (Polyethylene Terephthalate (PET) Resin from India, Indonesia, and Thailand)—briefing and vote. (The Commission is currently scheduled to transmit its determination and Commissioners' opinions to the Secretary of Commerce on or before April 26, 2005.)
6. Outstanding action jackets: none.

In accordance with Commission policy, subject matter listed above, not disposed of at the scheduled meeting, may be carried over to the agenda of the following meeting.

By order of the Commission:

Issued: March 24, 2005.

**Marilyn R. Abbott,**

*Secretary to the Commission.*

[FR Doc. 05–6284 Filed 3–25–05; 12:47 pm]

**BILLING CODE 7020–02–P**

## INTERNATIONAL TRADE COMMISSION

**[USITC SE–05–011]**

### Government in the Sunshine Act Meeting Notice

**AGENCY HOLDING THE MEETING:** United States International Trade Commission.

**TIME AND DATE:** April 14, 2005 at 11 a.m.

**PLACE:** Room 101, 500 E Street, SW., Washington, DC 20436, telephone: (202) 205–2000.

**STATUS:** Open to the public.

**MATTERS TO BE CONSIDERED:**

1. Agenda for future meetings: none.
2. Minutes.
3. Ratification List.
4. Inv. Nos. 701–TA–384 and 731–TA–806–808 (Review) (Certain Hot-Rolled Flat-Rolled Carbon-Quality Steel Products from Brazil, Japan, and Russia)—briefing and vote. (The Commission is currently scheduled to transmit its determination and Commissioners' opinions to the Secretary of Commerce on or before April 28, 2005.)
5. Outstanding action jackets: none.

In accordance with Commission policy, subject matter listed above, not disposed of at the scheduled meeting, may be carried over to the agenda of the following meeting.

By order of the Commission.

Issued: March 24, 2005.

**Marilyn R. Abbott,**

*Secretary to the Commission.*

[FR Doc. 05–6285 Filed 3–25–05; 12:47 pm]

**BILLING CODE 7020–02–P**

## INTERNATIONAL TRADE COMMISSION

**[USITC SE–05–012]**

### Government in the Sunshine Act Meeting Notice

**AGENCY HOLDING THE MEETING:** United States International Trade Commission.

**TIME AND DATE:** April 15, 2005, at 11 a.m.

**PLACE:** Room 101, 500 E Street, SW., Washington, DC 20436, telephone: (202) 205–2000.

**STATUS:** Open to the public.

**MATTERS TO BE CONSIDERED:**

1. Agenda for future meetings: none.
2. Minutes.
3. Ratification List.
4. Inv. No. 731–TA–1090 (Preliminary) (Superalloy Degassed Chromium from Japan)—briefing and vote. (The Commission is currently scheduled to transmit its determination to the Secretary of Commerce on or before April 18, 2005; Commissioners' opinions are currently scheduled to be transmitted to the Secretary of Commerce on or before April 25, 2005.)
5. Outstanding action jackets: none.

In accordance with Commission policy, subject matter listed above, not disposed of at the scheduled meeting, may be carried over to the agenda of the following meeting.

By order of the Commission.

Issued: March 24, 2005.

**Marilyn R. Abbott,**

*Secretary to the Commission.*

[FR Doc. 05–6286 Filed 3–25–05; 12:48 pm]

**BILLING CODE 7020–02–P**

## DEPARTMENT OF JUSTICE

### Antitrust Division

**[Civil No. 1:04–CV–01494]**

### Public Comments and Response on Proposed Final Judgment *United States* v. *Connors Bros. Income Fund and Bumble Bee Seafoods, LLC*

Pursuant to the Antitrust Procedures and Penalties Act, 15 U.S.C. § 16(b)–(h), the United States of America hereby publishes below the comments received on the proposed Final Judgment in *United States* v. *Connors Bros. Income Fund,* et al., Civil Action No. 1:04–CV–01494 (JDB), filed in the United States District Court for the District of Columbia, together with the United States' response to the comments.

Copies of the comments and response are available for inspection in Room 215 of the U.S. Department of Justice, Antitrust Division, 325 7th Street, NW., Washington, DC 20530, telephone: (202) 514–2481, and at the office of the Clerk of the United States District Court for the District of Columbia, United States Courthouse, Third Street and Constitution Avenue, NW., Washington, DC 20001. Copies of any of these materials may be obtained upon request and payment of a copying fee.

**J. Robert Kramer II,**

*Director of Operations, Antitrust Division.*

**United States District Court, District of Columbia**

*Civil Action No.:* 1:04CV01494.
*Before:* Judge John D. Bates.
*Filed:* January 7, 2005.
*United States of America, Plaintiff,* v. *Connors Bros. Income Fund, and Bumble Bee Seafoods, LLC, Defendants.*

### Comments of Citizens for Voluntary Trade in Opposition to the Proposed Final Judgment, Statement of Interest

Citizens for Voluntary Trade (CVT) is a nonprofit, nonpartisan educational organization that applies free market principles and rational ethics to contemporary antitrust issues through filings with federal courts and agencies, policy papers, public commentaries, and a Web site.[1] Since its establishment in 2002, CVT has filed dozens of public comments and briefs in response to government antitrust cases.

CVT and its supporters have an interest in the consistent enforcement of the principles of the Deceleration of Independence as applied by the United States Constitution. Expansion of the federal antitrust laws—including Section 7 of the Clayton Act—to authorize the government's violation of private property rights creates a substantial threat to the rights of all citizens of the United States.

Here, CVT presents a philosophical framework for analyzing and rejecting the Proposed Final Judgment. CVT seeks to prompt a philosophically informed analysis of the key facts and arguments of the case according to the principles set forth in the Constitution, as well as the concurrent ideas of free-market

[1] *http://www.voluntarytrade.org.*

economics and rational ethics. The United States has not engaged in such rigorous and philosophically consistent thinking. CVT's comments explore the tenuous arguments offered by the United States and the insubstantial ethical premises which underlie its arguments.

Accordingly, CVT files the following comments in opposition to the Proposed Final Judgment in this matter.[2]

*Introduction*

On April 30, 2004, Connors Bros. Income Fund (Connors) acquired Bumble Bee Seafoods, LLC (Bumble Bee). Both companies market canned sardines within the United States. Prior to the transactions, Connors held the first, second, and fourth largest selling brands of sardine snacks in the United States (Brunswick, Beach Cliff, and Port Clyde, respectively) earning revenues of $43 million. Bumble Bee, which held the third largest sardine brand, accounted for 13% of sales, earning $9 million in revenue.[3]

The United States filed a complaint alleging that the proposed combination of Connors and Bumble Bee would create a ''near monopoly'' in the market for ''sardine snacks.'' The merger would, according to the government, significantly lessen competition for the sale of sardine snacks in the United States, in violation of Section 7 of the Clayton Act, 15 U.S.C. 18. The government further claimed that the concomitant decrease in competition following the acquisition of Bumble Bee would result in higher consumer prices for sardine snacks.

The Proposed Final Judgment permits the merger to proceed, but requires Connors to divest its Port Clyde brand, five smaller brands—Commander, Possum, Bulldog, Admiral, and Neptune—along with ''related assets that an acquirer of those brands might need in order to become a viable and active competitor in the sale of sardine snacks throughout the United States.''

*Comments*

The government's case rests on four spurious arguments: (1) That ''canned sardine snacks'' are a distinct product market, distinguishable from the rest of the sardine industry; (2) that the pre- and post-merger market for canned sardine snacks are too highly concentrated, as measured by the Herfindahl-Hirschman Indices; (3) that the price of sardine snacks will increase once Connors ''monopolizes'' the market; and (4) that entry into the market for sardine snacks ''would not be timely, likely, or sufficient'' to deter any exercise of market power by the combined Connors/Bumble Bee entity. All of these arguments rest upon a tenuous definition of ''monopoly power'' and a profound ignorance of free-market principles.

**I**

With its quiver full of feeble intellectual arrows, the United States first opposes Connors' acquisition of Bumble Bee by defining ''canned sardine snacks'' as a distinct product market. This definition purposely narrows the scope of the market in order to create artificial ''monopolies.'' Here, the government has constructed an artificial typology that purports to distinguish between various types of sardine products available in the United States. Unbeknownst to the consumer, the United States has legally defined three sardine categories: The sardine snack, the premium sardine and the ethnic sardine.

The United States contends that the sardine snack is distinguished from premium and ethnic sardines because it consists of herring and other small fish caught and processed in the U.S., Canada, Poland, Morocco, South America, and Thailand, then sold in small snack-size containers. Sardine snacks cost U.S. consumers approximately $0.21/oz. The premium sardine usually consists of brisling species of fish that originates in Norway or Scotland and sold at retail in the U.S. for approximately $0.52/oz. Ethnic sardines, the United States claims, are not in the same product market as sardine snacks because the former are marketed primarily to ethnic groups, consumed as meals rather than snacks, and packaged in larger cans. The government further claims that ethnic sardines consist of larger herring and other species that are believed to be of a lesser quality than the herring used in sardine snacks. In addition, ethnic sardines cost less than sardine snacks, retailing for approximately $0.08/oz. Most importantly, according to the United States, grocery stores do not display ethnic sardines beside other sardine products, but rather in the separate ''ethnic'' food sections.

The government's claim that sardine snacks, premium sardines, and ethnic sardines constitute three distinct product markets is patently absurd. To illustrate the absurdity, consider how the government's reasoning could be applied to the market for tuna. Most grocery stores in the U.S. offer customers a variety of tuna products: Tuna packed in oil, tuna packed in water, tuna packed without liquid, white tuna, tuna that is caught without causing harm to dolphins, etc. Prices vary among different tuna varieties, but tuna in water is not a distinct product market from tuna in oil. Consumers express their preferences through selecting a particular variety of product and, within that variety, a particular brand.

Classifying sardines as three separate markets is nothing more than a pretext for the Department of Justice to expand regulation of each ''market'' under the antitrust laws. As distinct product markets within the sardine industry become more narrowly defined, obviously the number of competitors will decrease, and this in turn opens the door for the government to complain that, for example, once Connors acquires Bumble Bee, they'll have ''cornered'' the market for sardine snacks. Ultimately, however, sardines are sardines and consumers respond according to market conditions and individual preferences rather than bureaucratic models of consumer behavior.

**II**

After narrowly constraining the sardine market to include only ''sardine snacks,'' the United States next asserts that competition will be illegally lessened based on the Herfindahl-Hirschman Indices (HHI). The HHI purports to measure market concentration by adding the squares of the market shares of the existing competitors. For example, if a market has four competitors with market shares of 30%, 30%, 20%, and 20%, the HHI is ($900^{+}900^{+}400^{+}400$) or 2,600. The United States would consider this hypothetical market to be ''highly concentrated,'' because the HHI exceeds 1,800. If two of the four competitors—say the two firms with 30% shares—were to merge, the United States would likely object because this would increase the index number from 1,800 to 4,400. Any post-merger increase in the index of more than 100 in a ''highly concentrated'' market is deemed suspect because the merger is considered ''likely to create or enhance market power or facilitate its exercise.''[4]

Here, the government's complaint alleges that the unconditional merger of Connors and Bumble Bee would raise the HHI from 4,200 to 5,800, ''well in excess of levels that raise significant

[2] CVT thanks Douglas Messenger for his assistance in preparing these comments.

[3] Revenue figures are for 2003.

[4] U.S. Department of Justice and Federal Trade Commission, Horizontal Merger Guidelines § 1.5 (available at *http:www.usdoj.gov/atr/public/guideline/horiz—book/15.html*).

antitrust concerns.'' But assuming, *arguendo,* that the HHI figures are valid, this alone does not constitute proof of any ''market power'' or justify the government's intervention. The HHI is nothing more than a predictor of whether the Department of Justice (or the Federal Trade Commission) will pursue legal action. As economics professor Dominick Armentano has explained, the HHI has no objective merit as a tool of economic analysis:

> Although the general public has the impression that there must be some good reason for the antitrust authorities' choice of particular limits in the Herfindahl Index of market concentration, those limits are *completely arbitrary*. No one—and certainly not the antitrust authorities—can ever know whether a merger of firms that creates, say, a 36-percent market share, or one that raises the Herfindahl Index by 150 points, can create sufficient economic power to reduce market output and raise market price. No one knows, or can know, whether monopoly power begins at a 36-percent market share or a 36.74-percent market share. Neither economic theory nor empirical evidence can justify any merger guideline or prohibition.[5]

Property rights have no meaning if they are subject to arbitrary and capricious violation by the state. The United States cannot, consistent with the Constitution and free-market economic principles, condition a combination of privately-held properties based on whether the parties will own ''too much'' property according to an arbitrary statistic. Under such a standard, no property would be safe from government seizure on the grounds that ownership is ''highly concentrated.'' The federal government, for example, could seize private homes by claiming the homeowners possess ''too much'' property according to some index that purports to measure the market concentration of real estate.

Indeed, the government's exclusive reliance on the HHI in merger review cases raises a curious question. If the pre-merger index in this case is 4,200—more than double the threshold for labeling a market ''highly concentrated''—then why couldn't the United States, consistent with its self-imposed mandate, have forced Connors and Bumble Bee to divest assets before their merger? In other words, what is to stop the government from breaking up companies, without the pretext of merger review, to ensure the HHI stays below the ''highly concentrated'' threshold at all times? The practical answer is that were the United States to begin seizing and redistributing private property at-will, the government's antitrust policy would likely lose congressional and popular support. Without the facade of merger review, the government's actions would be seen by the public for what they are—*ad hoc* economic planning by the state.

## III

In the context of its artificially constructed sardine snack market, the United States claims that the acquisition of Bumble Bee results in a ''near monopoly.'' Under this line of reasoning, the government presumes that Connors will significantly increase the price of sardine snacks—which would be perfectly legal. Connors ''near monopoly,'' however, will not undermine the sovereignty of the consumer one iota. In response to a price increase, consumers can abstain or purchase premium or ethnic sardines. Markets are not static entities. Even a dominant seller owes its continued existence to the continued support of its customers.

Contrary to the government's monopoly paranoia, the dominance of a single seller is never permanent and continually depends on the seller's ability to satisfy the demands imposed by consumers within the market. Nobel Memorial Prize-winning economist F.A. Hayek said, ''The force which in a competitive society beings about the reduction in price to the lowest cost at which the quantity salable at the cost can be produced is the opportunity for anybody who knows a cheaper method to come into at this own risk and to attract consumers by underbidding the other producers.'' [6] Consumer abstention and underbidding holds the power of a single seller at bay and forces that seller to constantly reassess and readjust to satisfy changing demands. The United States has offered no evidence that the force Hayek describes would cease to exist in a world where Connors holds a ''near monopoly'' in a single sub-category within the sardine market (and indeed the substantially larger market for food).

Furthermore, the argument that the combination of Connors and Bumble Bee would constitute a monopoly, ''near'' or otherwise, is erroneous. The famed English jurist Lord Coke offered the classic—and correct—definition of a monopoly:

> An institution or allowance by the king, by his grant, commission, or otherwise * * * to any persons, bodies politic or corporate, for the sole buying, selling, making, working, or using of anything, whereby any person or persons, bodies politic or corporate, are sought to be restrained of any freedom or liberty that they had before, or hindered in their lawful trade.[7]

Connors and Bumble Bee do not qualify as a monopoly, either under Lord Coke's 17th century explanation or the more contemporary, yet equally accurate, definition offered by economist Murray Rothbard [8]: ''[It is] a grant of special privilege by the State, reserving a certain area of production to one particular individual or group. Entry into the field is prohibited to others and this prohibition is enforced by the gendarmes of the State.'' [9] Here the state has not reserved a certain area of production for Connors and Bumble Bee; rather, it is individual consumers who have rewarded the two companies for their efficiency in marketing sardines. No monopoly could ever exist, for sardines or any other product, unless by state action, as Professor Rothbard explained: ''It is obvious that this type of monopoly can never arise on a free market, unhampered by State interference. In the free economy, then according to this definition, there can be no 'monopoly problem' '' [10]

Finally, the United States claims entrance into the sardine snack market would not be ''timely, likely or sufficient'' to curb the market power of the combined Connors-Bumble Bee sardine operation. The irrationality of this argument is overwhelming. Once again, Professor Rothbard explains how free markets actually work:

> If consumer demand had really justified more competitors or more of the product or a greater variety of products, then entrepreneurs would have seized the opportunity to profit by satisfying this demand. The fact that it is not being done in any given case demonstrates that no such unsatisfied consumer demand exists. But if this is true, then it follows that *no man-made actions can improve the satisfaction of consumer demand more than is being done on the unhampered market.*[11] (Italics added.)

The Proposed Final Judgment is predicated on the government's arrogant belief that it can accurately project market activities indefinitely into the future. Such beliefs are reminiscent of the ''five-year plans'' enacted by the former Soviet Union. Here, the United States is substituting its own judgment for that of consumers through the *ad hoc* industrial planning of antitrust. The United States seeks to forcibly redistribute private property in an effort

[5] Dominic T. Armentano, Antitrust: The Case for Repeal 85–86 (1999).

[6] David Osterfeld, Prosperity Versus Planning: How Government Stifles Economic Growth 28.

[7] Murray N. Rothbard, Man, Economy & State 591 (2001).

[8] Coincidentally, this comment is filed on the tenth anniversary of Professor Rothbard's death.

[9] *Id.* at 591.

[10] *Id.* at 592.

[11] *Id.* at 581.

to satisfy a consumer ''demand'' that may never exist. Ostensibly, the government's argument is that consumers require protection from the consequences of their own market decisions: The state, not producers or consumers, know how many firms and what price levels will produce the ideal amount of ''competition''. More than two centuries of experience, however, tell us that such thinking is a recipe for economic stagnation. No government bureaucrat has ever been able to outperform the free market in fulfilling consumer needs.

And while sound economic principles demonstrate the folly of the government's case against Connors and Bumble Bee, the political principles of individual rights—specifically, property rights—trump even the economic objections discussed above. The United States Constitution was conceived by framers who held property rights sacrosanct: We own ourselves, our time, and those goods that we produce and voluntarily trade for. Yet now the very government that derives its authority from the Constitution is attempting to dictate economic outcomes rather than adhere to the classical American view that government should concern itself exclusively with the protection of life, liberty, and property. As John Locke wrote in his Second Treatise on Government, ''the end of the law is not to abolish or restrain, but to preserve and enlarge freedom.'' [12] The Proposed Final Judgment, with its ''divestiture'' mandate, demonstrates the converse of Locke's position, as it abolishes and restrains the liberties of Connors and Bumble Bee, its shareholders, and ultimately its customers.

The Proposed Final Judgment, therefore, does not represent an action taken in the public interest—under the Constitution, there is no ''public'' interest but the protection of individual rights—but rather it is what Frederick Bastiat would describe as an act of ''legal plunder.'' Bastiat identified legal plunder as ''the law tak[king] from some persons what belongs to them, and giv[ing] it to other persons to whom it does not belong.'' [13] Legal plunder occurs ''when a portion of wealth is transferred from the person who owns it—without his consent and without compensation, and whether by force or by fraud—to anyone who does not own it, then I say that property is violated.'' [14] In a free society purportedly dedicated to limited government and individual rights, the legal plunder of Connors and Bumble Bee's property is neither permissible nor defensible.

*Conclusion*

The government's case rests on the presumption that consumers have no impact on the actions of producers, and that a free market cannot prevent monopolies from arising. The United States has proposed intervening in the market for ''sardine snacks'' in order to protect consumers, yet there is no evidence or economic reasoning that can support the government's complaint or the Proposed Final Judgment. Instead of making excuses for a meritless intervention, the government should heed the words of economist Ludwig von Mises, who cautioned that the public interest can only be served through the existence of a free market:

> The unhampered market economy is not a system which would seem commendable from the standpoint of selfish group interests of the entrepreneurs and capitalists. It is not the particular interests of a group or of individual persons that require the market economy, but regard for the common welfare. It is not true that the advocates of the free-market economy are defenders of the selfish interests of the rich. The particular interests of the entrepreneurs and capitalists also demand intervention to protect them against the competition of more efficient and active men. The free development of the market economy is to be recommended, not in the interests of the rich, but in the interest of the masses of people.[15]

Accordingly, the government should withdraw the Proposed Final Judgment and voluntarily dismiss the complaint against Connors and Bumble Bee. In the alternative, the District Court should reject the Proposed Final Judgment as inconsistent with the public interest.

Dated: January 7, 2005.

Respectfully Submitted,

S.M. ''Skip'' Oliva,

*President.*

Melinda A. Haring,

*Senior Writer.*

Citizens for Voluntary Trade, Post Office Box 100073, Arlington, Virginia 22210, Telephone/Fax: (703) 740–8309, E-mail: *info@voluntarytrade.org.*

Case No. 1:04CV01494. Judge: JDB. Deck type: Antitrust.

United States of America, U.S. Department of Justice, Antitrust Division, 325 7th Avenue, NW., Suite 500, Washington, DC 20530, Plaintiff, v. Connors Bros. Income Fund, 669 Main Street, Blacks Harbour, New Brunswick, Canada, E5h 1K1, and Bumble Bee Seafoods, LLC, 9655 Granite Ridge Drive, San Diego, CA 92123–2674, Defendants.

**Response of the United States to Public Comments on the Proposed Final Judgment**

Pursuant to the Antitrust Procedures and Penalties Act, 15 U.S.C. 16(b) (''Tunney Act''), Plaintiff, the United States of America, acting under the direction of the Attorney General hereby files comments received from members of the public concerning the proposed Final Judgment in this civil antitrust suit, and the Response of the United States to those comments.

## I. Factual Background

*A. The Parties to the Transaction*

Connors Bros. Income Fund (''Connors'') is an income trust fund organized under Canadian law. In 2003, it marketed the first, second and fourth best selling brands of sardine snacks in the United States (Brunswick, Beach Cliff and Port Clyde, respectively). At that time, Connors brands accounted for approximately 63% of the sardine snack sales in the United States; and it earned revenues of about $43 million from the sale of these products.

Bumble Bee Seafoods, LLC (''Bumble Bee'') is a Delaware limited liability corporation with its headquarters in San Diego, California. It marketed the third largest selling brand of sardine snacks in the United States before it was acquired by Connors. In 2003, the Bumble Bee brand accounted for approximately 13% of U.S. sardine snack sales; and Bumble Bee earned revenues of about $9 million from the sale of these products.

*B. The Transaction*

Connors entered into a Transaction Agreement, dated February 10, 2004, in which it proposed to acquire Bumble Bee from Centre Capital Investors III, L.P. (the ''Transaction''). Connors partially financed its acquisition through a subscription agreement. The proceeds of that subscription were held in escrow pending final consummation of the Transaction. Under Canadian law, those funds had to be withdrawn to finance the acquisition before the escrow agreement expired on April 30, 2004 (otherwise, the funds had to be returned to the subscribers).

The United States' preliminary investigation into the likely competitive effects of the Transaction indicated that it was likely that combining the two companies selling the four largest selling brands of sardine snacks (with a combined U.S. market share of over 75%) would lessen competition in violation of Section 7 of the Clayton Act (15 U.S.C. 18). The Defendants proposed a settlement by which they would divest one or more Connors or Bumble Bee brands and related assets in order to

[12] John Locke, Two Treaties of Government 306 (Peter Laslett, ed., 1988).

[13] Frederic Bastiat, The Law 17 (1972).

[14] *Id.* at 22.

[15] Ludwig von Mises, Interventionism: An Economic Analysis 79 (Bettina Bien Greaves, ed., 1998).

restore the competition that otherwise would be lost by the combination of Connors and Bumble Bee.

On April 30, 2004, the United States and Defendants finalized an agreement by which: the United States agreed not to file suit at that time to enjoin the Transaction; the Defendants signed a Hold Separate Stipulation and Order and a proposed Final Judgment, which included remedies designed to restore the competition that the United States' preliminary analysis indicated would be lost through the Connors/Bumble Bee combination; and the United States agreed to defer filing the executed Hold Separate Stipulation and Order and proposed Final Judgment until it completed a thorough investigation into the likely competitive effects of the Transaction. At the completion of this investigation, the United States confimred that it was likely that the Transaction, as originally proposed, would harm competition for the sale of sardine snacks in the United States, but decided to narrow the scope of the original Final Judgment to eliminate certain remedies that were not needed to restore competition in the relevant antitrust market.

*C. The Complaint*

On August 31, 2004, the United States filed a Complaint alleging that the likely effect of the Transaction, as originally proposed, would be to lessen competition substantially for the sale of sardine snacks throughout the United States in violation of Section 7 of the Clayton Act. The Complaint further alleged that this loss of competition would result in U.S. consumers paying higher prices for sardine snacks.

*D. The Proposed Settlement*

When the United States filed its Complaint, it also filed a Hold Separate Stipulation and Order and proposed Final Judgment. The proposed Final Judgment includes a divestiture package that is designed to eliminate the anticompetitive effects of the Transaction.

The proposed Final Judgment provides that Connors must transfer its Port Clyde, Commander, Bulldog, Possum, Admiral and Neptune labels of sardine snacks to an acquirer that is acceptable to the United States (the ''Divestiture Assets''). In addition, the Divestiture Assets include a processing plant (if the acquirer wants it), inventories, and the other tangible and intangible assets that an acquirer might need to produce, distribute and sell sardine snacks under the divested labels in the United States. Moreover, the proposed Final Judgment provides that the acquirer may sell other canned seafood products under its brand names (as do Connors, Bumble Bee and other sellers of sardine snacks)—as Connors is required to transfer all of its rights to produce, distribute and sell seafood products under the divested brands (with the limited exception of clam products, which Connors may continue to sell under the Neptune brand).

*E. Compliance With the Tunney Act*

To date, the United States and the parties to this transaction have complied with the provisions of the Tunney Act as follows:

(1) The Complaint, Hold Separate Stipulation and Order, and proposed Final Judgment were filed on August 31, 2004.

(2) The Competitive impact Statement (''CIS'') was filed on October 19, 2004.

(3) Defendants have filed the statements required by 15 U.S.C. 16(g).

(4) A summary of the terms of the proposed Final Judgment and CIS was published in the Washington Post, a newspaper of general circulation in the District of Columbia, for seven days during the period November 6, 2004 through November 12, 2004.

(5) The Complaint, proposed Final Judgment and CIS were published in the **Federal Register** on November 9, 2004, 69 FR 64969 (2004).[1]

(6) The sixty-day public comment period specified in 15 U.S.C. 16(b) commenced on November 9, 2004.

(7) About November 15, 2004, the Defendants advised the United States of their intention to transfer the Divestiture Assets to Ocean Beauty Seafoods, Inc. (''Ocean Beauty''), in conjunction with a supply agreement of unlimited duration.

(8) On December 15, 2004, the United States filed an amended proposed Final Judgment with the Court, which includes a new Section IV.K to resolve the United States' concerns that Ocean Beauty might not establish an independent supply of fish for its sardine snacks if it had a supply agreement of unlimited duration with the Defendants.

(9) The Defendants consummated their transfer for the Divestiture Assets to Ocean Beauty on December 15, 2004 (after the amended proposed final Judgment had been field).

(10) The 60 day comment period expired on January 10, 2005.

(11) The United States received one comment from a member of the public (attached as Appendix A) and hereby files this Response pursuant to 15 U.S.C. 16(b).

The United states will move this Court for entry of the proposed Final Judgment after the comments and the Response are published in the **Federal Register**. The proposed Final Judgment cannot be entered before that publication. 15 U.S.C. 16(d).

**II. Legal Standard Governing the Court's Public Interest Determination**

Upon the publication of the public comments and this Response, the United States will have fully complied with the Tunney Act. After receiving the United States' motion for entry of the proposed Final Judgment, the Court must determine whether it ''is in the public interest.'' 15 U.S.C. 16(e), as amended. In doing so, the Court must apply a deferential standard and should withhold its approval only under very limited conditions. *See, e.g., Mass. Sch. of Law at Andover, Inc.* v. *United States,* 118 F.3d 776, 783 (D.C. Cir. 1997). Specifically, the Court should review the proposed Final Judgment in light of the violations charged in the complaint. *Id.* (quoting *United States* v. *Microsoft Corp.*, 56 F.3d 1448, 1462 (D.C. Cir. 1995), hereinafter ''*Microsoft*'').

Comments challenging the validity of the United States' case, or alleging that it should not have been brought, are challenges to the initial exercise of the United States' prosecutorial discretion, which are outside the scope of the Tunney Act. The purpose of the Court's public interest inquiry is not to evaluate the merits of the United States' case, or to conduct a de novo determination of facts and issues, because ''[t]he balancing of competing social and political interest affected by a proposed antitrust decree must be left, in the first instance, to the discretion of the Attorney general.'' *United states* v. *Western Elec. Co.*, 993 F.2d 1572, 1577 (D.C. Cir. 1993) (citations omitted). Courts consistently have refused to consider ''contentions going to the merits of the underlying claims and defenses.'' *United States* v. *Bechtel*, 648 F.2d 660, 666 (9th Cir. 1981).

With this standard in mind, the Court should consider the comment and the United States' Response. As this Response makes clear, entry of the proposed Final Judgment is in the public interest.

**III. Summary of Public Comment**

The United States received one comment—from Citizens for Voluntary Trade (''CVT''), which describes itself as ''a nonprofit, nonpartisan educational organization that applies free market principles and rational ethics to

[1] The United States also posted the Complaint, proposed Final Judgment and the CIS on its Web site, *http://www.usdoj.gov/atr/cases/205200/205283, 206800/206840 and 205900/205900.htm.*

contemporary antitrust issues * * *'' CVT Comment at 1. CVT opposes any remedies to ameliorate the competitive harm that the United States alleges would otherwise occur as a result of Connors' acquisition of Bumble Bee, and urges the Court to reject the proposed Final Judgment as inconsistent with the public interest.

It appears that CVT is philosophically opposed to the antitrust laws. CVT Comment at 1. Beyond that, CVT argues that the United States raised spurious arguments to support the Complaint's allegation that: (1) Sardine snacks is a relevant product market; (2) the sardine snack market is concentrated; (3) it is likely that the transaction would give Connors sufficient market power to increase the price of canned sardine snacks; and (4) entry into the sardine snack market would not be timely, likely or sufficient to deter the exercise of market power by the combined Connors/Bumble Bee entity. CVT Comment at 2.

All of CVT's arguments are directed toward the United States' decision to file the Complaint, and to accept the Defendants' offer to avoid the need to litigate this matter by divesting Port Clyde and the other Connors' sardine snack brands. None of CVT's arguments are directed toward relevant Tunney Act issues, *i.e.*, whether, *in light of the violations charged in the complaint*, the terms of the proposed Final Judgment are inconsistent with the public interest. *Microsoft* at 1462 (emphasis added).

## IV. The Department's Response To Specific Comments

The Court should ignore CVT's comment. It second guesses the United States' decision to file the Complaint without raising any relevant arguments about the adequacy of the relief in light of the violations charged in the Complaint. Nevertheless, the United States will briefly respond to the issues CVT raises in its comment. Copies of this Response are being mailed to CVT.

Contrary to CVT's assertion, sardine snacks are a relevant product market within the meaning of the antitrust laws. CVT appears to misunderstand the concept of a relevant product market. Certainly consumers could switch to premium or ethnic sardines if the combined Connors/Bumble Bee firm raised the prices of sardine snacks—they could even switch to canned tuna, salmon or sausages. The relevant issue, however, is whether sufficient numbers of sardine snack consumers would switch to other food products to make it unprofitable for a hypothetical monopolist of sardine snacks to raise prices.[2]

The United States' delineation of the relevant market is based on the specific facts of this case, which were developed in a thorough investigation that included numerous interviews of executives from retail outlets that buy sardine snacks, as well as other sellers of sardine products. In their business judgment, if the sellers of sardines raised their prices by a small but significant amount, insufficient numbers of sardine snack buyers would switch to premium or ethnic sardines in order to make that price increase unprofitable. Moreover, these executives' business judgment is consistent with the United States' independent quantitative analysis of the substitutability of sardine snacks, premium sardines and ethnic sardines.

Contrary to CVT's second assertion, the sardine snack industry is highly concentrated. Even CVT recognizes that the Herfindahl-Hirschman Index (''HHI'') indicates that the Transaction would significantly raise concentration in an already concentrated market.[3] And, as the courts recognize, the HHI test is a useful analytical tool for measuring market concentration. Heinz, 246 F.3d at 716 (''Sufficiently large HHI figures establish the FTC's prima facie case that a merger is anti-competitive''); *United States* v. *Baker Hughes, Inc.* 908 F.2d 981, 982–83 (D.C. Cir. 1990); Cardinal Health, 12 F.Supp 2d at 53 (''Accordingly, the courts turn to the Guidelines for assistance and over the years have come to accept the HHI as the most prominent and accurate method of measuring market concentration'').

Contrary to CVT's third assertion, it is likely that the Transaction would create market power for the combined Connors/Bumble Bee firm. In fact, the combined market share of over 75% is so high that the combined firm would likely acquire unilateral market power, *i.e.,* they could profitably raise prices even if the remaining small sellers of sardine snacks kept prices at the original level in order to increase their market share.[4]

Finally, contrary to CVT's last assertion, it is not likely that entry into the sardine snack market would be timely, likely or sufficient enough to deter the exercise of market power by the combined Connors/Bumble Bee firm. Our investigation determined that brand recognition is an important factor in the marketing and sale of sardine snacks in the United States, and consumers of these products generally restrict their purchases to brands they know and trust. New entry would require years of effort and the investment of substantial sunk costs, including promotion expenditures and slotting allowances (in many grocery chains), to create brand awareness among consumers.

In short, none of CVT's comments are relevant to the issues before this court, because they are challenges to the Complaint itself, rather than challenges to the proposed Final Judgment in light of the violations charged in the Complaint. Moreover, its irrelevant criticism of the United States' decision to file the Complaint misconstrues the law and the facts of this case.

## V. Conclusion

The Competitive Impact Statement and this Response to Comments demonstrate that the proposed Final Judgment serves the public interest. Accordingly, after publication of the Response in the Federal Register pursuant to 15 U.S.C. 16(b), the United States will move this Court to enter the Final Judgment.

Dated this 22nd day of February, 2005.

Respectfully submitted,

Robert L. McGeorge, Michelle J. Livingston, Hillary L. Snyder.

Attorneys, U.S. Department of Justice, Antitrust Division, Transportation, Energy & Agriculture Section, 7th Street, NW.; Suite 500, Washington, DC 20530.

## Certificate of Service

I hereby certify that on this 22nd day of February, 2005, I have caused a copy

[2] *See,* the Department of Justice/Federal Trade Commission's Horizontal Merger Guidelines (1992, revised 1997) (the ''Guidelines'') at § 1.11. The courts have recognized that the Guidelines provide a useful analytical tool for predicting the likely competitive consequences of mergers. *FTC* v. *H.J. Heinz Co.*, 246 F.3d 708, 716 n. 9 (D.C. Cir. 2001) (''Heinz''); *FTC* v. *Cardinal Health, Inc.*, 12 F. Supp. 2d 34, 53 (D.D.C. 1998) (''*cardinal Health*''). Recent cases in which courts declined to add purported substitutes to the relevant product market include: *Consolidated Gas Co. of Fla.* v. *City Gas Co. of Fla.*, 665 F. Supp. 1493, 1504, 1517 (S.D. Fla. 1987) (Consumers would not shift to liquid petroleum based gas in response to a 5% increase in natural gas prices); aff'd 880 F.2d 297 (11th Cir 1989); reh'g granted and opinion vacated (on non-antitrust grounds) 499 U.S. 915 (1991); and *United States* v. *Archer-Daniels-Midland Co.*,

[3] The Transaction, as originally proposed, would raise the HHI by over 1600 points to 5800 (approximately 4000 points over the 1800 point indication of highly concentrated markets).

[4] As noted in the Guidelines, ''A merger between firms in a market for differentiated products may diminish competition by enabling the merged firm to profit by unilaterally raising the price of one or both products above the premerger level. Some of the sales loss due to the price rise merely will be diverted to the product of the merger partner and, depending on relative margins, capturing such sales loss through the merger may make the price increase profitable even though it would not have been profitable premerger.'' Guidelines at § 2.21.

of the foregoing Response of the United States to Public Comments on the Proposed Final Judgment and the attached Appendix to be served by first class mail, postage prepaid, and by facsimile on counsel for Defendants in this matter:

Michelle J. Livingston, Attorney, Antitrust Division, U.S. Department of Justice, 325 Seventh St., NW, Suite 500, Washington, DC 20530, Telephone: (202) 353–7328, Facsimile (202) 307–2784.

David T. Beddow.

O'Melveny & Meyers LLP, 1625 Eye Street, NW., Washington, DC 20006–4001. Counsel for the Defendants.

[FR Doc. 05–5331 Filed 3–28–05; 8:45 am]

**BILLING CODE 4410–11–M**

## DEPARTMENT OF LABOR

### Office of the Secretary

### Submission for OMB Emergency Review; Comment Request

March 21, 2005.

The Department of Labor has submitted the following (see below) information collection request (ICR), utilizing emergency review procedures, to the Office of Management and Budget (OMB) for review and clearance in accordance with the Paperwork Reduction Act of 1995 (Pub. L. 104–13, 44 U.S.C. Chapter 35). OMB approval is requested by April 14, 2005. A copy of this ICR, with applicable supporting documentation, may be obtained by calling the Department of Labor Departmental Clearance Officer, Ira L. Mills (202) 693–4122.

Comments and questions about the ICR listed below should be forwarded to the Office of Information and Regulatory Affairs, Attn: OMB Desk Officer for the Employment and Training Administration, Room 10235, Washington, DC 20503. The Office of Management and Budget is particularly interested in comments which:

- Evaluate whether the proposed collection of information is necessary for the proper performance of the functions of the agency, including whether the information will have practical utility;
- Evaluate the accuracy of the agency's estimate of the burden of the proposed collection of information, including the validity of the methodology and assumptions used;
- Enhance the quality, utility, and clarify of the information to be collected; and
- Minimize the burden of the collection of information on those who are to respond, including through the use of appropriate automated, electronic, mechanical, or other technological collection techniques or other forms of information technology, *e.g.*, permitting electronic submissions of responses.

*Agency:* Employment and Training Administration (ETA).

*Type of Review:* Emergency.

*Title:* Labor Exchange Reporting System.

*OMB Number:* 1205–0240.

*Affected Public:* State, Local, or Tribal Government.

| Form/Activity | Total respondents | Frequency | Total responses | Average time per response | Total annual burden hours |
|---|---|---|---|---|---|
| ETA 9002 A | 54 | Quarterly | 216 | 346 | 74,641 |
| ETA 9002 B | 54 | Quarterly | 216 | 346 | 74,641 |
| ETA 9002 C | 54 | Quarterly | 216 | 346 | 74,641 |
| ETA 9002 D | 54 | Quarterly | 216 | 346 | 74,641 |
| ETA 9002 E | 54 | Quarterly | 216 | 21 | 4,536 |
| VETS 200 A | 54 | Quarterly | 216 | 346 | 74,641 |
| VETS 200 B | 54 | Quarterly | 216 | 346 | 74,641 |
| VETS 200 C | 54 | Quarterly | 216 | 346 | 74,641 |
| Totals | 54 | | 1,728 | | 527,020 |

*Total Burden Cost (capital/startup):* $1,825,200.

*Total Burden Cost (operating/maintaining):* $17,128,164.

*Description:* States submit quarterly performance data for the Wagner-Peyser-funded public labor exchange through ETA 9002 reports and for Veteran's Employment and Training Services (VETS)-funded labor exchange through VETS 200 reports. The Employment and Training (ET) Handbook No. 406 contains the report forms and provides instructions for completing these reports. The ET Handbook No. 406 contains a total of eight reports (ETA 9002 A, B, C, D, E; VETS 200 A, B, C). The ETA 9002 and VETS 200 reports collect data on individuals who receive core employment and workforce information services through the public labor exchange and VETS-funded labor exchange of the states' One-Stop delivery systems. The current LERS expires in April 2005.

This is a request to revise the current LERS requirements to include data elements necessary for assessing state progress against common measures of performance beginning July 1, 2005. In 2002, under the President's Management Agenda, OMB and other Federal agencies developed a set of common performance measures to be applied to certain Federally-funded employment and training programs with similar strategic goals. Although the common measures are an integral part of ETA's performance accountability system, these measures provide only part of the information necessary to effectively oversee the workforce investment system. ETA will continue to collect from states and grantees data on program activities, participants, and outcomes that are necessary for program management and to convey full and accurate information on the performance of workforce programs to policymakers and stakeholders.

The value of implementing common measures is the ability to describe in a similar manner the core purposes of the workforce system—how many people found jobs; did people stay employed; and did earnings increase. Multiple sets of performance measures have burdened states and grantees as they are required to report performance outcomes based on varying definitions and methodologies. By minimizing the different reporting and performance requirements, common performance measures can facilitate the integration of service delivery, reduce barriers to cooperation among programs, and enhance the ability to assess the effectiveness and impact of the workforce investment system, including the performance of the system in serving

individuals facing significant barriers to employment.

This revision to the LERS identifies a minimum level of information collection that is necessary to comply with Equal Opportunity requirements, holds states appropriately accountable for the Federal funds they receive, including common performance measures, and allows the Department to fulfill its oversight and management responsibilities.

**Ira L. Mills,**

*Departmental Clearance Officer/Team Leader.*

[FR Doc. 05–6115 Filed 3–28–05; 8:45 am]

**BILLING CODE 4510–30–P**

## DEPARTMENT OF LABOR

### Office of the Secretary

### Submission for OMB Review; Comment Request

March 21, 2005.

The Department of Labor (DOL) has submitted the following public information collection request (ICR) to the Office of Management and Budget (OMB) for review and approval in accordance with the Paperwork Reduction Act of 1995 (Pub. L. 104–13, 44 U.S.C. Chapter 35). A copy of each ICR, with applicable supporting documentation, may be obtained by contacting the Department of Labor (DOL). To obtain documentation, contact Ira Mills on (202) 693–4122 (this is not a toll-free number) or e-mail: *mills.ira@dol.gov.*

Comments should be sent to Office of Information and Regulatory Affairs, Attn: OMB Desk Officer for DOL, Office of Management and Budget, Room 10235, Washington, DC 20503 (202) 395–7316 (this is not a toll-free number), within 30 days from the date of this publication in the **Federal Register.**

The OMB is particularly interested in comments which:

- Evaluate whether the proposed collection of information is necessary for the proper performance of the functions of the agency, including whether the information will have practical utility;
- Evaluate the accuracy of the agency's estimate of the burden of the proposed collection of information, including the validity of the methodology and assumptions used;
- Enhance the quality, utility, and clarity of the information to be collected; and
- Minimize the burden of the collection of information on those who are to respond, including through the use of appropriate automated, electronic, mechanical, or other technological collection techniques or other forms of information technology, *e.g.,* permitting electronic submission of responses.

*Agency:* Employment and Training Administration.

*Type of Review:* Extension of a currently approved collection.

*Title:* Unemployment Insurance Data Validation Program.

*OMB Number:* 1205–0431.

*Frequency:* Annually.

*Affected Public:* State, local, or tribal government; Federal Government.

*Number of Respondents:* 53.

*Number of Annual Responses:* 53.

Burden Summary

| Activity | Number of respondents | Hours per activity | Frequency | Total burden |
|---|---|---|---|---|
| Full Validation | 53 | 900 | Annually | 47,700 |
| Half Validation | 53 | 450 | Annually | 23,850 |
| Third Validation | 53 | 300 | Annually | 15,900 |
| Totals burden hours | | | | 29,150 |

*Total Annualized Capital/Startup Costs:* $0.

*Total Annual Costs (operating/maintaining systems or purchasing services):* $0.

*Description:* This program requires States to operate a system for ascertaining the validity (adherence to Federal reporting requirements) of specified unemployment insurance data they submit to the Employment and Training Administration on certain reports they are required to submit monthly or quarterly. Some of these data are used to assess performance, including for the Government Performance and Results Act, or to determine States' grants for UI administration.

**Ira L. Mills,**

*Departmental Clearance Officer.*

[FR Doc. 05–6116 Filed 3–28–05; 8:45 am]

**BILLING CODE 4510–30–P**

## DEPARTMENT OF LABOR

### Office of the Secretary

### Submission for OMB Emergency Review; Comment Request

March 21, 2005.

The Department of Labor has submitted the following information collection request (ICR), utilizing emergency review procedures, to the Office of Management and Budget (OMB) for review and clearance in accordance with the Paperwork Reduction Act of 1995 (Pub. L. 104–13, 44 U.S.C. Chapter 35). OMB approval is being requested by April 14, 2005. A copy of this ICR, with applicable supporting documentation, may be obtained by calling the Department of Labor Departmental Clearance Officer, Ira L. Mills (202) 693–4122.

Comments and questions about the ICR listed below should be forwarded to the Office of Information and Regulatory Affairs, Attn: OMB Desk Officer for the Employment and Training Administration, Room 10235, Washington, DC 20503. The Office of Management and Budget is particularly interested in comments which:

- Evaluate whether the proposed collection of information is necessary for the proper performance of the functions of the agency, including whether the information will have practical utility;
- Evaluate the accuracy of the agency's estimate of the burden of the proposed collection of information, including the validity of the methodology and assumptions used;
- enhance the quality, utility, and clarity of the information to be collected; and
- minimize the burden of the collection of information on those who are to respond, including through the use of appropriate automated, electronic, mechanical, or other technological collection techniques or other forms of information technology, *e.g.*, permitting electronic submissions of responses.

*Agency:* Employment and Training Administration.

*Type of Review:* Emergency.

*Title:* Trade Act Participant Report.

*OMB Number:* 1205–0392.

*Frequency:* Quarterly.

*Affected Public:* State, Local, or Tribal Government.

| TAA burden | Annual national participants | Hours per TAPR record | Annual TAPR burden hours | Applicable hourly rate | Annual TAPR burden dollars |
|---|---|---|---|---|---|
| Data Collection | 30,000 | 0.3 | 9,000 | $32.50 | $292,500 |
| TAPR Submission | 50 | 2.5 | 500 | 32.50 | 16,250 |
| | | | | | $308,750 |

*Total Burden:* 9,500 hours.

*Total Burden Cost (capital/startup):* $ 0.

*Total Burden Cost (operating/maintaining):* $ 308,750.

*Description:* On June 16, 1998, OMB approved a Government Performance and Results Act (GPRA) compliant performance and participant outcomes data collection system for the Trade Adjustment Assistance (TAA) program. This system was revised in 2000 and is now known as the Trade Act Participant Report (TAPR). States implemented the TAPR beginning with the first quarter of fiscal year 1999 (October through December, 1998), and have continued to collect and report data every quarter since then. The current TAPR reporting requirements will expire in November 2005.

This is a request to revise the current TAA program reporting requirements to reflect expanded program and services implemented under the Trade Act of 2002 and include data elements necessary for assessing state progress against common measures of performance beginning October 1, 2005. In 2002, under the President's Management Agenda, OMB and other Federal agencies developed a set of common performance measures to be applied to certain Federally-funded employment and training programs with similar strategic goals. Although the common measures are an integral part of ETA's performance accountability system, these measures provide only part of the information necessary to effectively oversee the workforce investment system. ETA will continue to collect from states and grantees data on program activities, participants, and outcomes that are necessary for program management and to convey full and accurate information on the performance of workforce programs to policymakers and stakeholders.

The value of implementing common measures is the ability to describe in a similar manner the core purposes of the workforce system—how many people found jobs; did people stay employed; and did earnings increase. Multiple sets of performance measures have burdened states and grantees as they are required to report performance outcomes based on varying definitions and methodologies. By minimizing the different reporting and performance requirements, common performance measures can facilitate the integration of service delivery, reduce barriers to cooperation among programs, and enhance the ability to assess the effectiveness and impact of the workforce investment system, including the performance of the system in serving individuals facing significant barriers to employment.

This revision to the TAA program reporting system identifies a minimum level of information collection that is necessary to comply with Equal Opportunity requirements, holds states appropriately accountable for the Federal funds they receive, including common performance measures, and allows the Department to fulfill its oversight and management responsibilities.

**Ira L. Mills,**

*Departmental Clearance Officer.*

[FR Doc. 05–6117 Filed 3–28–05; 8:45 am]

BILLING CODE 4510–30–P

## DEPARTMENT OF LABOR

### Office of the Secretary

### Submission for OMB Emergency Review; Comment Request

March 22, 2005.

The Department of Labor has submitted the following information collection request (ICR), utilizing emergency review procedures, to the Office of Management and Budget (OMB) for review and clearance in accordance with the Paperwork Reduction Act of 1995 (Pub. L. 104–13, 44 U.S.C. Chapter 35). OMB approval has been requested by April 14, 2005. A copy of this ICR, with applicable supporting documentation, may be obtained by calling the Department of Labor Departmental Clearance Officer, Ira L. Mills, at (202) 693–4122.

Comments and questions about the ICR listed below should be forwarded to the Office of Information and Regulatory Affairs, Attn: OMB Desk Officer for the Employment and Training Administration, Room 10235, Washington, DC 20503. The Office of Management and Budget is particularly interested in comments which:

- Evaluate whether the proposed collection of information is necessary for the proper performance of the functions of the agency, including whether the information will have practical utility;
- Evaluate the accuracy of the agency's estimate of the burden of the proposed collection of information, including the validity of the methodology and assumptions used;
- Enhance the quality, utility, and clarify of the information to be collected; and
- Minimize the burden of the collection of information on those who are to respond, including through the use of appropriate automated, electronic, mechanical, or other technological collection techniques or other forms of information technology, *e.g.*, permitting electronic submissions of responses.

*Agency:* Employment and Training Administration.

*Title:* WIA Management Information and Reporting System.

*OMB Number:* 1205–0420.

*Frequency:* Quarterly; Annually.

*Affected Public:* State, Local, or Tribal Government.

| Form/Activity | Total respondents | Average annual hours/respondent | Total annual/hours |
|---|---|---|---|
| WIASRD Record | 53 | 11,415 | 604,982 |

| Form/Activity | Total respondents | Average annual hours/respondent | Total annual/hours |
|---|---|---|---|
| Quarterly Summary Report | 53 | 640 | 33,920 |
| Annual Summary Report | 53 | 400 | 21,200 |
| Customer Satisfaction | 53 | 925 | 49,043 |
| Total | 53 | 13,380 | 709,145 |

*Total Burden:* 709,145 hours.

*Total Burden Cost (capital/startup):* $1,791,400.

*Total Burden Cost (operating/maintaining):* $ 22,237,916.

*Description:* Each state administering a grant under the WIA adult, dislocated worker, and youth programs is required to submit quarterly (ETA 9090) and annual (ETA 9091) reports containing information related to levels of participation and performance outcomes. In addition, each state submits a file of individual records on all participants who exit the programs, formally called the Workforce Investment Act Title I–B Standardized Record Data (WIASRD). These individual records are submitted once each year for the July-to-June program period. The current WIA Management Information and Reporting System expires in August 2005.

This is a request to revise the current WIA program reporting requirements to include data elements necessary for assessing state progress against common measures of performance beginning July 1, 2005. In 2002, under the President's Management Agenda, OMB and other Federal agencies developed a set of common performance measures to be applied to certain Federally-funded employment and training programs with similar strategic goals. Although the common measures are an integral part of ETA's performance accountability system, these measures provide only part of the information necessary to effectively oversee the workforce investment system. ETA will continue to collect from states and grantees data on program activities, participants, and outcomes that are necessary for program management and to convey full and accurate information on the performance of workforce programs to policymakers and stakeholders.

The value of implementing common measures is the ability to describe in a similar manner the core purposes of the workforce system—how many people found jobs; did people stay employed; and did earnings increase. Multiple sets of performance measures have burdened states and grantees as they are required to report performance outcomes based on varying definitions and methodologies. By minimizing the different reporting and performance requirements, common performance measures can facilitate the integration of service delivery, reduce barriers to cooperation among programs, and enhance the ability to assess the effectiveness and impact of the workforce investment system, including the performance of the system in serving individuals facing significant barriers to employment.

This revision to the WIA program reporting requirements identifies a minimum level of information collection that is necessary to comply with Equal Opportunity requirements, holds states appropriately accountable for the Federal funds they receive, including common performance measures, and allows the Department to fulfill its oversight and management responsibilities.

**Ira L. Mills,**

*Departmental Clearance Officer.*

[FR Doc. 05–6118 Filed 3–28–05; 8:45 am]

BILLING CODE 4510–30–P

## DEPARTMENT OF LABOR

### Office of the Secretary

### Submission for OMB Review: Comment Request

March 22, 2005.

The Department of Labor (DOL) has submitted the following public information collection requests (ICRs) to the Office of Management and Budget (OMB) for review and approval in accordance with the Paperwork Reduction Act of 1995 (Pub. L. 104–13, 44 U.S.C. chapter 35). A copy of each ICR, with applicable supporting documentation, may be obtained by contacting Ira Mills on (202) 693–4122 (this is not a toll-free number) or e-mail: *mills.ira@dol.gov.*

Comments should be sent to Office of Information and Regulatory Affairs, Attn: OMB Desk Officer for the Occupational Safety and Health Administration (OSHA), Office of Management and Budget, Room 10235, Washington, DC 20503, (202) 395–7316 (this is not a toll-free number), within 30 days from the date of this publication in the **Federal Register.**

The OMB is particularly interested in comments which:

- Evaluate whether the proposed collection of information is necessary for the proper performance of the functions of the agency, including whether the information will have practical utility;
- Evaluate the accuracy of the agency's estimate of the burden of the proposed collection of information, including the validity of the methodology and assumptions used;
- Enhance the quality, utility, and clarity of the information to be collected; and
- Minimize the burden of the collection of information on those who are to respond, including through the use of appropriate automated, electronic, mechanical, or other technological collection techniques or other forms of information technology, *e.g.,* permitting electronic submission of responses.

*Agency:* Employment and Training Administration.

*Type of Review:* Extension.

*Title:* Non Production Questionnaire.

*OMB Number:* 1205–0447.

*Frequency:* On occasion.

*Type of Response:* Reporting.

*Affected Public:* Individuals or households.

*Number of Respondents:* 810.

*Number of Annual Responses:* 810.

*Estimated Time per Response:* 3.5 hours.

*Total Burden Hours:* 2,835.

*Total Annualized Capital/Startup Costs:* $0.

*Total Annual Costs (operating/maintaining systems or purchasing services):* $0.

*Total Annual Costs (operating/maintaining systems or purchasing services):* $51,660.

*Description:* Information on this form is required in order to make a determination on TAA petitions filed on behalf of service workers according to Section 223 of the Trade Act, as amended.

**Ira L. Mills,**

*Departmental Clearance Officer.*

[FR Doc. 05–6119 Filed 3–28–05; 8:45 am]

BILLING CODE 4510–26–P

## DEPARTMENT OF LABOR

### Bureau of Labor Statistics

### Proposed Collection, Comment Request

**ACTION:** Notice.

**SUMMARY:** The Department of Labor, as part of its continuing effort to reduce paperwork and respondent burden, conducts a pre-clearance consultation program to provide the general public and Federal agencies with an opportunity to comment on proposed and/or continuing collections of information in accordance with the Paperwork Reduction Act of 1995 (PRA95) [44 U.S.C. 3506(c)(2)(A)]. This program helps to ensure that requested data can be provided in the desired format, reporting burden (time and financial resources) is minimized, collection instruments are clearly understood, and the impact of collection requirements on respondents can be properly assessed. The Bureau of Labor Statistics (BLS) is soliciting comments concerning the proposed revision of the ''American Time Use Survey (ATUS).'' A copy of the proposed information collection request (ICR) can be obtained by contacting the individual listed below in the Addresses section of this notice.

**DATES:** Written comments must be submitted to the office listed in the Addresses section of this notice on or before May 31, 2005.

**ADDRESSES:** Send comments to Amy A. Hobby, BLS Clearance Officer, Division of Management Systems, Bureau of Labor Statistics, Room 4080, 2 Massachusetts Avenue, NE., Washington, DC 20212, telephone number (202) 691–5118. (This is not a toll free number.)

**FOR FURTHER INFORMATION CONTACT:** Amy A. Hobby, BLS Clearance Officer, telephone number (202) 691–5118. (See **ADDRESSES** section.)

**SUPPLEMENTARY INFORMATION:**

### I. Background

According to economist William Nordhaus, ''Inadequate data on time use is the single most important gap in federal statistics'' (1997). Approximately 50 other countries collect, or will soon collect, time-use data. Such data are considered important indicators of quality of life. They measure, for example, time spent with children, working, sleeping, or doing leisure activities. In the United States, several existing Federal surveys collect income and wage data for individuals and families, and analysts often use such measures of material prosperity as proxies for quality of life. Time-use data substantially augment these quality-of-life measures. The data also can be used in conjunction with wage data to evaluate the contribution of non-market work to national economies. This enables comparisons of production between nations that have different mixes of market and non-market activities.

The ATUS develops nationally representative estimates of how people spend their time. Respondents also report who was with them during activities, where they were, how long each activity lasted, and if they were paid.

All of this information has numerous practical applications for sociologists, economists, educators, government policymakers, businesspersons, lawyers, and others, potentially answering the following questions:

- Do the ways people use their time vary across demographic and labor force characteristics, such as age, sex, race, ethnicity, employment status, earnings, and education?
- How much time do parents spend in the company of their children, either actively providing care or being with them while socializing, relaxing, or doing other things?
- How are earnings related to leisure time—do those with higher earnings spend more or less time relaxing and socializing?
- Where do people work—at a workplace, in their homes, or someplace else?
- For application in personal injury or wrongful death cases, how much non-market work, such as child care or housework, is done by members of selected demographic groups? This input helps lawyers to approximate a value of such work in these cases.

The ATUS data are collected on an ongoing, monthly basis, so time series data will eventually become available, allowing analysts to identify changes in how people spend their time.

### II. Current Action

Office of Management and Budget clearance is being sought for the revision of the American Time Use Survey. This survey collects information on how individuals in the United States use their time. Collection is done on a continuous basis with the sample drawn monthly. The survey sample is drawn from households completing their final month of interviews for the Current Population Survey (CPS). Households are selected to ensure a representative demographic sample, and one individual from each household is selected to take part in one Computer Assisted Telephone Interview. The interview asks respondents to report all of their activities for one pre-assigned 24-hour day, the day prior to the interview. A short series of summary questions and CPS updates follows the core time diary collection.

Beginning in October 2005, after the summary questions and CPS updates, a few questions sponsored by the Economic Research Service of the United States Department of Agriculture (USDA) will be asked. These questions will be included in the survey for up to 27 months (through December 2007). An evaluation of question performance will be done during the first year to determine the full fielding period. These questions will measure time respondents spent doing ''secondary eating'' (eating while doing something else). They also will measure respondent height and weight in order to enable the computation of respondent body mass index (BMI). In addition, there will be questions about household grocery shopping and food preparation, participation in school meal programs for household children, and eligibility for food stamp benefits. After each full year of collection, annual national estimates of time use for an average weekday or weekend day will be available.

Because the ATUS sample is a subset of households completing interviews for the CPS, the same demographic information collected from that survey is available for the ATUS respondents. Comparisons of activity patterns, including secondary eating, and answers from other USDA-sponsored questions across characteristics such as sex, race, age, and education of the respondent, as well as the presence of children and the number of adults living in the respondent's household, are possible.

*Type of Review:* Revision of a currently approved collection.

*Agency:* Bureau of Labor Statistics.

*Title:* American Time Use Survey.

*OMB Number:* 1220–0175.

*Affected Public:* Individuals.

*Total Respondents:* 13,920.

*Frequency:* Monthly.

*Total Responses:* 13,920.

*Average Time Per Response:* 24 minutes.

*Estimated Total Burden Hours:* 5,568 hours.

*Total Burden Cost (capital/startup):* $0.

*Total Burden Cost (operating/maintenance):* $0.

### III. Desired Focus of Comments

The Bureau of Labor Statistics is particularly interested in comments that:

- Evaluate whether the collection of this information is necessary for the proper performance of the functions of the agency, including whether the information has practical utility;
- Evaluate the accuracy of the agency's estimate of the burden of the collection of information, including the validity of the methodology and assumptions used;
- Enhance the quality, utility, and clarity of the information that is collected; and
- Minimize the burden of the collection of information on those asked to respond, including through the use of appropriate automated, electronic, mechanical, or other technological collection techniques or other forms of information technology, *e.g.*, permitting electronic submissions of responses.

Comments submitted in response to this notice will be summarized and/or included in the request for Office of Management and Budget approval of the information collection request; they also will become a matter of public record.

Signed in Washington, DC, this 21st day of March, 2005.

**Cathy Kazanowski,**

*Chief, Division of Management Systems, Bureau of Labor Statistics.*

[FR Doc. 05–6120 Filed 3–28–05; 8:45 am]

**BILLING CODE 4510–28–P**

---

## DEPARTMENT OF LABOR

## Employment and Training Administration

## Proposed Information Collection Request Submitted for Public Comment and Recommendations; Attestations by Employers Using Alien Crewmembers for Longshore Activities at Locations in the State of Alaska

**ACTION:** Notice.

**SUMMARY:** The Department of Labor, as part of its continuing effort to reduce paperwork and respondent burden, conducts a preclearance consultation program to provide the general public and Federal agencies with an opportunity to comment on proposed and/or continuing collections of information in accordance with the Paperwork Reduction Act of 1995 (PRA95), 44 U.S.C. 3506(c)(2)(A). This program helps to ensure that requested data can be provided in the desired format, reporting burden (time and financial resources) is minimized, collection instruments are clearly understood, and the impact of collection requirements on respondents can be properly assessed. Currently, the Employment and Training Administration, Office of National Programs, Division of Foreign Labor Certification, is soliciting comments concerning the proposed extension to the collection of information on the Attestation by Employers Using Alien Crewmembers for Longshore Activities at Locations in the State of Alaska. A copy of the proposed information collection request (ICR) can be obtained by contacting the office listed below in the addressee section of this Notice.

**DATES:** Written comments must be submitted to the office listed in the addressee section below on or before May 31, 2005.

**ADDRESSES:** Send comments and questions regarding the collection of information on Form ETA 9033, Attestations by Employers Using Alien Crewmembers for Longshore Activities at Locations in the State of Alaska, should be directed to William L. Carlson, Chief, Division of Foreign Labor Certification, Employment and Training Administration, U.S. Department of Labor, 200 Constitution Avenue, NW., Room C–4318, Washington, DC 20210, (202) 693-3010 (this is not a toll-free number).

**SUPPLEMENTARY INFORMATION:**

### I. Background

The information collection is required due to amendments to Section 258 of the Immigration and Nationality Act (INA) (8 U.S.C. 1101 *et seq.*) The amendments created a prevailing practice exception to the general prohibition on the performance of longshore work by alien crewmembers at locations in the State of Alaska. Under the prevailing practice exception, before any employer may use alien crewmembers to perform longshore activities at locations in the State of Alaska, it must submit an attestation to ETA containing the elements prescribed by the INA.

The INA further requires that the Department make available for public examination in Washington, DC, a list of employers which have filed attestations, and for each such employer, a copy of the employer's attestation and accompanying documentation it has received.

In order for the Department to meet its statutory responsibilities under the INA, there is a need for an extension of an existing collection of information pertaining to employers' seeking to use alien crewmembers to perform longshore activities at locations in the State of Alaska.

Because the prevailing practice exception remains in the Statute, ETA is requesting a one-hour marker as a place holder for this collection of information. ETA has not received any attestations under the prevailing practice exception within the last three years. An information collection request will be submitted to increase the burden should activities recommence.

### II. Review Focus

The Department of Labor is particularly interested in comments which:

- Evaluate whether the proposed information collection is necessary for the proper performance of the functions of the agency, including whether the information will have practical utility;
- Evaluate the accuracy of the agency's estimate of the burden of the proposed collection of information including the validity of the methodology and assumptions used;
- Enhance the quality, utility, and clarity of the information to be collected; and
- Minimize the burden of the collection of information on those who are to respond, including through the use of appropriate automated, electronic, mechanical, or other technological collections techniques or other forms of information, *e.g.*, permitting electronic submissions of responses.

### III. Current Actions

*Type of Review:* Extension of a currently approved collection without change.

*Agency:* Employment and Training Administration.

*Title:* Attestations by Employers Using Alien Crewmembers for Longshore Activities at Locations in the State of Alaska.

*OMB Number:* 1205–0352.

*Agency Number:* ETA 9033A.

*Affected Public:* Businesses or other for-profit.

*Total Respondents:* 100.

*Estimate Total Annual Burden Hours:* 300.

*Total Burden Cost (Capital/Startup):* $0.

*Total Burden Cost (Operating/Maintaining):* $0.

Comments submitted in response to this notice will be summarized and/or included in the request for Office of Management and Budget approval of the ICR; they will also be become a matter of public record.

Dated: March 21, 2005.

**John R. Beverly,**

*Administrator, Office of National Programs.*

[FR Doc. E5–1379 Filed 3–28–05; 8:45 am]

**BILLING CODE 4510–30–P**

## DEPARTMENT OF LABOR

### Mine Safety and Health Administration

### Petitions for Modification

The following parties have filed petitions to modify the application of existing safety standards under section 101(c) of the Federal Mine Safety and Health Act of 1977.

**1. Webster County Coal, LLC**

[Docket No. M–2005–013–C]

Webster County Coal, LLC, 1586 Balls Hill Road, Nebo, Kentucky 42441 has filed a petition to modify the application of 30 CFR 75.1101–1(b) (Deluge-type water spray systems) to its Dotiki Mine (MSHA I.D. No. 15–02132) located in Hopkins County, Kentucky. The petitioner requests a modification of the existing standard to eliminate the use of blow-off dust covers for the nozzles of a deluge-type water spray system. The petitioner proposes to train a person in the testing procedures specific to the deluge-type water spray fire suppression systems used at each belt drive to once a week conduct a visual examination of each deluge-type water spray fire suppression system; a functional test of the deluge-type water spray fire suppression systems by actuating the system and observing its performance; and finally, to record the results of the examination and functional test in a book maintained on the surface that would be made available to the authorized representative of the Secretary. The results of the examination and functional test will be retained at the mine for one year. The petitioner states that if any malfunction or clogged nozzle is detected as a result of the weekly examination or functional test, corrections will be made immediately. The petitioner further states that the procedure used to perform the functional test will be posted at or near each belt drive that uses a deluge-type water spray fire suppression system. The petitioner asserts that the proposed alternative method would provide at least the same measure of protection as the existing standard.

**2. Peabody Energy**

[Docket No. M–2005–014–C]

Peabody Energy, 202 Laidley Tower, P.O. Box 1233, Charleston, West Virginia 25324–1233 has filed a petition to modify the application of 30 CFR 75.901 (Protection of low- and medium-voltage three-phase circuits used underground) to its Highland Mine (MSHA I.D. No. 15–02709) located in Union County, Kentucky. The petitioner proposes to use a 480-volt, three-phase diesel-powered electric generator to move equipment in the mine. The petitioner has listed in this petition for modification specific procedures that would be followed when the proposed alternative method is implemented. The petitioner asserts that the proposed alternative method would provide at least the same measure of protection as the existing standard.

**3. Kennecott Energy Company**

[Docket No. M–2005–015–C]

Kennecott Energy Company, 505 South Gillette Avenue, P.O. Box 3009, Gillette, Wyoming 82717–3009 has filed a petition to modify the application of 30 CFR 77.802 (Protection of high-voltage circuits; neutral grounding resistors; disconnecting devices) to its Cordero-Rojo Mine (MSHA I.D. No. 48–00992) and Jacobs Ranch Mine (I.D. No. 48–00997) located in Campbell County, Wyoming; Antelope Mine (I.D. No. 48–01337) located in Converse County, Wyoming; Spring Creek Mine (I.D. No. 24–01457) located in Bighorn County, Montana; and Colowyo Coal Mine (I.D. No. 05–02962) located in Moffat County, Colorado. The petitioner requests a modification of the existing standard to permit an alternative method of compliance for continued use of high-voltage diesel-powered electric generators. The petitioner proposes to use a high-voltage portable diesel-powered electric generator to move and/or operate electrical equipment for temporary non-production functions such as, but not limited to, shovel relocations, maintenance outages, building services during power outages for the safety of the miners and the mine. The petitioner states that when using the generator to power mobile equipment, only one piece of equipment will be powered, and in certain conditions, the generator may be used to supply power to pump substations. The petitioner has listed in this petition for modification specific terms and conditions that would be followed when the proposed alternative method is implemented. The petitioner asserts that the proposed alternative method would provide at least the same measure of protection as the existing standard.

**4. Kennecott Energy Company**

[Docket No. M–2005–016–C]

Kennecott Energy Company, 505 South Gillette Avenue, P.O. Box 3009, Gillette, Wyoming 82717–3009 has filed a petition to modify the application of 30 CFR 77.811 (Movement of portable substations and transformers) to its Cordero-Rojo Mine (MSHA I.D. No. 48–00992) and Jacobs Ranch Mine (I.D. No. 48–00997) located in Campbell County, Wyoming; Antelope Mine (I.D. No. 48–01337) located in Converse County, Wyoming; Spring Creek Mine (I.D. No. 24–01457) located in Bighorn County, Montana; and Colowyo Coal Mine (I.D. No. 05–02962) located in Moffat County, Colorado. The petitioner requests a modification of the existing standard to permit an alternative method of compliance for prohibiting movement of energized transformers that are a part of a diesel-powered electric generator. The petitioner proposes to use a portable high-voltage diesel-powered electric generator to move and/or operate electrical equipment for temporary non-production functions such as, but not limited to, shovel relocations, maintenance outages, building services during power outages for the safety of the miners and the mine. The petitioner states that when using the generator to power mobile equipment, only one piece of equipment will be powered, and in certain conditions, the generator may be used to supply power to pump substations. The petitioner also states that the transformers are an integral part of, and trailer mounted with, the portable diesel-powered electric generator and can be safely moved as a part of the system. The petitioner has listed in this petition for modification specific terms and conditions that would be followed when the proposed alternative method is implemented. The petitioner asserts that the proposed alternative method would provide at least the same measure of protection as the existing standard.

**5. Ohio Valley Coal Company (The)**

[Docket No. M–2005–017–C]

The Ohio Valley Coal Company, 56854 Pleasant Ridge Road, Alledonia, Ohio 43902 has filed a petition to modify the application of 30 CFR 75.350(b)(5) (Belt air course ventilation) to its Powhatan No. 6 Mine (MSHA I.D. No. 33–01159) located in Belmont County, Ohio. Due to deteriorating roof conditions in the Main North which extends from the junction of A-West Submain to the Portal of Hope, delivery and installation of supplemental supports will expose miners to hazardous conditions. The petitioner

proposes to mine and/or rehabilitate a set of entries parallel to the existing Main North entries to reduce the miner's exposure to injury by using the specific terms and conditions listed in this petition for modification. The petitioner states that the majority of the development will consist of rehabilitation of existing entries and crosscuts, and some extraction of coal in areas between the existing gate sections. The petitioner asserts that application of the existing standard would result in a diminution of safety to the miners and the proposed alternative method would provide at least the same measure of protection as the existing standard.

**6. Ohio Valley Coal Company (The)**

[Docket No. M–2005–018–C]

The Ohio Valley Coal Company, 56854 Pleasant Ridge Road, Alledonia, Ohio 43902 has filed a petition to modify the application of 30 CFR 75.350(b)(6) (Belt air course ventilation) to its Powhatan No. 6 Mine (MSHA I.D. No. 33–01159) located in Belmont County, Ohio. Due to deteriorating roof conditions in the Main North which extends from the junction of A-West Submain to the Portal of Hope, delivery and installation of supplemental supports will expose miners to hazardous conditions. The petitioner proposes to mine and/or rehabilitate a set of entries parallel to the existing Main North entries to reduce the miner's exposure to injury by using the specific terms and conditions listed in this petition for modification. The petitioner states that the majority of the development will consist of rehabilitation of existing entries and crosscuts, and some extraction of coal in areas between the existing gate sections. The petitioner asserts that application of the existing standard would result in a diminution of safety to the miners and the proposed alternative method would provide at least the same measure of protection as the existing standard.

**Request for Comments**

Persons interested in these petitions are encouraged to submit comments via Federal eRulemaking Portal: *http://www.regulations.gov*; e-mail: *zzMSHA-Comments@dol.gov*; Fax: (202) 693–9441; or Regular Mail/Hand Delivery/Courier: Mine Safety and Health Administration, Office of Standards, Regulations, and Variances, 1100 Wilson Boulevard, Room 2350, Arlington, Virginia 22209. All comments must be postmarked or received in that office on or before April 28, 2005. Copies of these petitions are available for inspection at that address.

Dated at Arlington, Virginia this 22nd day of March 2005.

**Rebecca J. Smith,**

*Acting Director, Office of Standards, Regulations, and Variances.*

[FR Doc. 05–6065 Filed 3–28–05; 8:45 am]

BILLING CODE 4510–43–P

## DEPARTMENT OF LABOR

### Veterans' Employment and Training Service

### Urban Homeless Veterans' Reintegration Program (HVRP) Grants for Program Year (PY) 2005

*Announcement Type:* Initial Solicitation for Grant Applications (SGA).

*Funding Opportunity Number:* SGA # 05–01.

*Catalogue of Federal Domestic Assistance #:* 17–805.

*Dates:* Applications are due on April 28, 2005.

Period of Performance is PY 2005, July 1, 2005 through June 30, 2006.

*Executive Summary* (Applicants For Grant Funds Should Read This Notice In Its Entirety): The U.S. Department of Labor (USDOL), Veterans' Employment and Training Service (VETS), announces a grant competition under 38 U.S.C. Section 2021, as added by Section 5 of Public Law 107–95, the Homeless Veterans Comprehensive Assistance Act of 2001 (HVCAA). Section 2021 requires the Secretary of Labor to conduct, directly or through grant or contract, such programs as the Secretary determines appropriate to expedite the reintegration of homeless veterans into the labor force.

Due to limited available funding and the high concentration of homeless veterans in the metropolitan areas of the 75 U.S. cities largest in population and the metropolitan area of San Juan, Puerto Rico, the only jurisdictions eligible to be served through this urban competition for HVRPs are those areas listed in Appendix I.

HVRP grants are intended to address two objectives: (1) To provide services to assist in reintegrating homeless veterans into meaningful employment within the labor force, and (2) to stimulate the development of effective service delivery systems that will address the complex problems facing homeless veterans. Successful applicants will design programs that assist eligible veterans by providing job placement services, job training, counseling, supportive services, and other assistance to expedite the reintegration of homeless veterans into the labor force. Successful programs will also be designed to be flexible in addressing the universal as well as the local or regional problems that have had a negative impact on homeless veterans reentering the workforce.

Under this solicitation covering Fiscal Year (FY) 2005, VETS anticipates that up to $2,000,000 will be available for grant awards up to a maximum of $300,000 for each grant award. VETS expects to award approximately seven (7) grants. This notice contains all of the necessary information and forms to apply for grant funding. The period of performance for these PY 2005 grants will be July 1, 2005 through June 30, 2006. Two (2) optional years of funding may be available, depending upon Congressional appropriations, the agency's decision to exercise the optional year(s) of funding, and satisfactory grantee performance.

**I. Funding Opportunity Description**

The U.S. Department of Labor (USDOL), Veterans' Employment and Training Service (VETS), announces a grant competition under 38 U.S.C. Section 2021, as added by Section 5 of Public Law 107–95, the Homeless Veterans Comprehensive Assistance Act of 2001 (HVCAA) . Section 2021 requires the Secretary of Labor to conduct, directly or through grant or contract, such programs as the Secretary determines appropriate to provide job training, counseling, and placement services (including job readiness, literacy training, and skills training) to expedite the reintegration of homeless veterans into the labor force.

*1. Program Concept and Emphasis*

HVRP grants are intended to address two objectives: (a) To provide services to assist in reintegrating homeless veterans into meaningful employment within the labor force, and (b) to stimulate the development of effective service delivery systems that will address the complex problems facing homeless veterans.

For this Fiscal Year (FY) 2005 grant solicitation, VETS seeks applicants that will provide direct services through a case management approach that networks with Federal, State, and local resources for veteran support programs. Successful applicants will have clear strategies for employment and retention of employment for homeless veterans. Successful applicants will design programs that assist eligible veterans by providing job placement services, job training, counseling, mentoring, supportive services, and other assistance to expedite the reintegration of homeless veterans into the labor force. Successful applicants will also

design programs that are flexible in addressing the universal as well as the local or regional problems that have had a negative impact on homeless veterans reentering the workforce. The HVRP in PY 2005 will seek to continue to strengthen development of effective service delivery systems, to provide comprehensive services through a case management approach that address complex problems facing eligible veterans trying to transition into gainful employment, and to improve strategies for employment and retention in employment.

Due to the limited amount of funding and the high concentration of homeless veterans in the metropolitan areas of the 75 U.S. cities largest in population and the metropolitan area of San Juan, Puerto Rico, the only jurisdictions eligible to be served through this urban competition for HVRP are those areas listed in Appendix I.

*2. Project Awareness Program Information and Orientation Activities*

In order to promote networking between the HVRP funded program and local service providers (and thereby eliminate gaps or duplication in services and enhance the provision of assistance to participants), the grantee must provide project orientation workshops and/or program awareness activities that it determines are the most feasible for the types of providers listed below. Grantees are encouraged to demonstrate strategies for incorporating small faith-based and community organizations (defined as organizations with social services budgets of $350,000 or less and six (6) or fewer full-time employees) into their outreach plans. Project orientation workshops conducted by grantees have been an effective means of sharing information and informing the community of the availability of other services; they are encouraged but not mandatory. Rather, grantees will have the flexibility to attend service provider meetings, seminars, and conferences, to outstation staff, and to develop individual service contracts as well as to involve other agencies in program planning.

*The grantee will be responsible for providing project awareness, program information, and orientation activities to the following:*

A. Direct providers of services to homeless veterans, including shelter and soup kitchen operators, to make them aware of the services available to homeless veterans to make them job-ready and to aid their placement into jobs.

B. Federal, State, and local agencies such as the Social Security Administration (SSA), Department of Veterans Affairs (DVA), State Workforce Agencies (SWAs) and local One-Stop Centers (which integrate Workforce Investment Act (WIA) and other employment and training services), mental health services, and healthcare detoxification facilities: to familiarize them with the nature and needs of homeless veterans.

C. Civic and private sector groups, in particular Veterans' Service Organizations, support groups, job training and employment services, and community-based organizations (including faith-based organizations), to provide information on homeless veterans and their needs.

The grantee will also be responsible for participating in ''Stand Down'' events. A ''Stand Down'' is an event held in a locality, usually for one (1) to three (3) days, where services are provided to homeless veterans along with shelter, meals, clothing, employment services, and medical attention. This type of event is mostly a volunteer effort, which is organized within a community and brings service providers together such as the Department of Veterans Affairs, Disabled Veterans' Outreach Program Specialists (DVOP) and Local Veterans' Employment Representatives (LVER) staff from the State Workforce Agencies, Veteran Service Organizations, military personnel, civic leaders, and a variety of other interested persons, groups, and organizations. Many services are provided on-site with referrals also made for continued assistance after the Stand Down event. These events can often be the catalyst that enables homeless veterans to get back into mainstream society. The Department of Labor has supported replication of these events and many have been held throughout the nation.

*In areas where an HVRP is operating, grantees are expected and encouraged to participate fully and offer their services for all locally planned Stand Down event(s).* Toward this end, up to $8,000 of the requested HVRP grant funds may be used to supplement the Stand Down efforts, where funds are not otherwise available, and may be requested in the budget and explained in the budget narrative.

*3. Scope of Program Design*

*In addition to the activities described above, the project design must include the following services:*

A. Outreach, intake, assessment, peer counseling to the degree practical, employment services, and follow-up support services to enhance retention in employment. Program staff providing outreach services should have experience in dealing with, and an understanding of the needs of, homeless veterans. Outreach activities must include and coordinate with the DVOP and LVER staff in the State Workforce Agencies or in the workforce investment systems' One-Stop Career Centers, Veterans' Workforce Investment Program (VWIP), and the Department of Veterans Affairs.

B. Provision of or referral to employment services such as: job search workshops, job counseling, assessment of skills, resume writing techniques, interviewing skills, subsidized trial employment (work experience), job development services, job placement into unsubsidized employment, job placement follow-up services to enhance retention in employment.

C. Provision of or referral to training services such as: basic skills instruction, remedial education activities, life skills and money management training, on-the-job training, classroom training, vocational training, specialized and/or licensing training programs, and other formal training programs as deemed appropriate to benefit the participant. At least 80% of the enrolled HVRP participants must participate in training activities.

D. Grantees must perform a preliminary assessment of each participant's eligibility for Department of Veterans Affairs (DVA) service-connected disability, compensation, and/or pension benefits. As appropriate, grantees will work with the Veterans Service Organizations or refer the participants to DVA in order to file a claim for compensation or pension. Grantees will track progress of claims and report outcomes in case management records.

E. Coordination with veterans' services programs, including: DVOPs and LVERs in the workforce investment system's One-Stop Career Centers, as well as Veterans' Workforce Investment Programs (VWIPs), Department of Veterans Affairs (DVA) services, including its Health Care for Homeless Veterans, Domiciliary Care, Regional Benefits Assistance Program, and Transitional Housing under Homeless Provider Grant and per diem programs.

F. Networking with Veterans' Service Organizations such as: The American Legion, Disabled American Veterans, Veterans of Foreign Wars, Vietnam Veterans of America, the American Veterans (AMVETS).

G. Referral as necessary to health care, counseling, and rehabilitative services including, but not limited to: alcohol and drug rehabilitation, therapeutic services, Post Traumatic Stress Disorder

(PTSD) services, and mental health services as well as coordination with Stewart B. McKinney Homeless Assistance Act (MHAA) programs for health care for the homeless, and health care programs under the Homeless Veterans Comprehensive Assistance Act (HVCAA) of 2001.

H. Referral to housing assistance, as appropriate, provided by: local shelters, Federal Emergency Management Administration (FEMA) food and shelter programs, transitional housing programs and single room occupancy housing programs funded under MHAA and HVCAA, and permanent housing programs for disabled homeless persons funded under MHAA and HVCAA.

4. *Results-Oriented Model:* No specific model is mandatory, but successful applicants will design a program that is responsive to the needs of the local community and achieves the HVRP objectives. The HVRP objectives are to successfully reintegrate homeless veterans into the workforce and to stimulate the development of effective service delivery systems that will address the complex problems facing homeless veterans.

Under the Government Performance and Results Act (GPRA), Congress and the public are looking for program results rather than program processes. The outcome measurement established for HVRP grants is for grantees to meet a minimum entered employment rate of 58%, determined by dividing the number of participants who entered employment by the number of HVRP enrollments. (Actual performance outcomes will be reported quarterly using an Internet-based reporting system for HVRP with access provided to successful grantees after the award process has been completed.) While the percentage of HVRP enrollments that enter employment is an important outcome, it is also necessary to evaluate and measure the program's long-term results, through the 90-day and 180-day follow-up periods, to determine the quality and success of the program.

The applicant's program should be based on a results-oriented model. The first phase of activity should consist of the level of outreach necessary to introduce the program to eligible homeless veterans. Outreach also includes establishing contact with other agencies that encounter homeless veterans. Once the eligible homeless veterans have been identified, an assessment must be made of each individual's abilities, interests, needs, and barriers to employment. In some cases, participants may require referrals to services such as rehabilitation, drug or alcohol treatment, or a temporary shelter before they can be enrolled into the HVRP program. Once the eligible homeless veteran is stabilized, the assessment must concentrate on the employability of the individual and whether the individual is to be enrolled into the HVRP program.

A determination should be made as to whether the HVRP enrolled participant would benefit from pre-employment preparation such as resume writing, job search workshops, related employment counseling, and case management, or possibly an initial entry into the job market through temporary jobs. Additionally, sheltered work environments, classroom training, and/or on-the-job training must be evaluated. Such services should be noted in an Employability Development Plan to facilitate the staff's successful monitoring of the plan. Entry into full-time employment or a specific job-training program should follow, in keeping with the overall objective of HVRP, to bring the participant closer to self-sufficiency. Supportive services may assist the HVRP enrolled participant at this point or even earlier.

Job development, a crucial part of the employability process, usually occurs when there are no competitive job openings that the HVRP-enrolled participant is qualified to apply for, therefore, a job opportunity is created or developed specifically for that HVRP enrolled participant with an employer. HVRP-enrolled participants who are ready to enter employment and/or who are in need of intensive case management services are to be referred to the DVOP and LVER staff at a One-Stop Career Center. DVOP and LVER staff are able to provide HVRP-enrolled participants the following services: job development, employment services, case management and career counseling. Most DVOP and LVER staff received training in case management at the National Veterans' Training Institute. All DVOP and LVER staff provide employment-related services to veterans who are most at a disadvantage in the labor market. VETS' recommends working hand-in-hand with DVOP/LVER and other One-Stop Career Center staff to achieve economies of resources and to avoid duplication of services. DVOP/LVER staff may also be able to provide valuable assistance in tracking participants in their State wage record management information system for follow-up purposes at 90 and 180 days after a participant enters employment.

The applicant's program must include tracking of program participants. Tracking should begin with the referral to employment and continue through the 90-day and 180-day follow-up periods after entering employment to determine whether the veteran is in the same or similar job. It is important that the grantee maintain contact with veterans after placement to ensure that employment-related problems are addressed. The 90-day and 180-day follow-ups are fundamental to assessing program results. Grantees need to budget for 90-day and 180-day follow-up activity so that it can be performed for those participants placed at or near the end of the grant performance period. All grantees, prior to the end of the grant performance period, must obligate sufficient funds to ensure that follow-up activities are completed. Such results will be reported in the final technical performance report.

## II. Award Information

1. *Type of Funding Instrument:* One (1) year grant.

2. *Funding Levels:* The total funding available for this Urban HVRP solicitation is up to $2,000,000. It is anticipated that approximately seven (7) awards will be made under this solicitation. Awards are expected to range from $75,000 to a maximum of $300,000. The Department of Labor reserves the right to negotiate the amounts to be awarded under this competition. Please be advised that requests exceeding $300,000 will be considered non-responsive and will not be evaluated.

3. *Period of Performance:* The period of performance will be for the twelve (12) month period of July 1, 2005 to June 30, 2006, unless modified by the Grant Officer. It is expected that successful applicants will begin program operations under this solicitation on July 1, 2005. All program funds must be obligated by June 30, 2006; a limited amount of funds may be obligated and reserved for follow-up activities and closeout.

4. *Optional Year Funding:* Should Congress appropriate additional funds for this purpose, VETS may consider up to an optional two (2) years of funding. The Government does *not,* however, guarantee optional year funding for any grantee. In deciding whether to exercise any optional year(s) of funding, VETS will consider grantee performance during the previous period of operations as follows:

A. The grantee must meet, at minimum, 85% of planned goals for Federal expenditures, enrollments, and placements in each quarter and/or at least 85% of planned cumulative goals by the end of the third quarter; and

B. The grantee must be in compliance with all terms identified in the

Solicitation for Grant Application (SGA) and grant award document; and

C. All program and fiscal reports must have been submitted by the established due dates and must be verified for accuracy.

## III. Eligibility Information

1. *Eligible Applicants:* Applications for funds will be accepted from State and local Workforce Investment Boards, local public agencies, for-profit/commercial entities, and nonprofit organizations, including faith-based and community organizations. Applicants must have a familiarity with the area and population to be served and the ability to administer an effective and timely program.

Eligible applicants will generally fall into one of the following categories:

- State and local Workforce Investment Boards (WIBs), established under Sections 111 and 117 of the Workforce Investment Act.
- Public agencies, meaning any public agency of a State or of a general purpose political subdivision of a State that has the power to levy taxes and spend funds, as well as general corporate and police powers. (This typically refers to cities and counties.) A State agency may propose in its application to serve one or more of the potential jurisdictions located in its State. This does not preclude a city or county agency from submitting an application to serve its own jurisdiction.
- For-profit/commercial entities.
- Nonprofit organizations. If claiming 501(c)(3) status, the Internal Revenue Service statement indicating 501(c)(3) status approval must be submitted.

Note that entities organized under Section 501(c)(4) of the Internal Revenue Code that engage in lobbying activities are not eligible to receive funds under this announcement. Section 18 of the Lobbying Disclosure Act of 1995, Public Law 104–65, 109 Stat. 691 (2 U.S.C. 1611) prohibits instituting an award, grant, or loan of federal funds to 501(c) (4) entities that engage in lobbying.

2. *Cost Sharing:* Cost sharing and/or matching funds are *not* required. However, we do encourage grantees to maximize the resources available to the project.

3. *Other Eligibility Criteria:*

A. The proposal must include a participant outreach component that uses DVOP/LVER staff and/or trained outreach staff. Programs must be ''employment-focused.'' An ''employment-focused'' program is a program directed toward: (1) increasing the employability of homeless veterans through training or arranging for the provision of services that will enable them to work and (2) matching homeless veterans with potential employers.

B. Applicants are encouraged to utilize, through partnerships or sub-awards, experienced public agencies, private nonprofit organizations, private businesses, faith-based and community organizations, and colleges and universities (especially those with traditionally high enrollments of minorities) that have an understanding of unemployment and the barriers to employment unique to homeless veterans, a familiarity with the area to be served, and the capability to effectively provide the necessary services.

C. To be eligible for enrollment as a participant under this HVRP grant an individual must be homeless *and* a veteran defined as follows:

- The term ''*homeless or homeless individual*'' includes persons who lack a fixed, regular, and adequate nighttime residence. It also includes persons whose primary nighttime residence is either a supervised public or private shelter designed to provide temporary living accommodations; an institution that provides a temporary residence for individuals intended to be institutionalized; or a public or private place not designed for, or ordinarily used as, a regular sleeping accommodation for human beings. [42 U.S.C. 11302 (a)].
- The term ''*veteran*'' means a person who served in the active military, naval, or air service, and who was discharged or released under conditions other than dishonorable. [38 U.S.C. 101(2)].

## IV. Application and Submission Information

1. *Address to Request an Application and Amendments:* Application announcements or forms will not be mailed. The **Federal Register** may be obtained from your nearest government office or library. Additional application packages may be obtained from *http://www.dol.gov/vets* or *http://www.fedgrants.gov/*. The application forms and their instructions, and other pertinent materials are included in the Appendices. If copies of the standard forms are needed, they can also be downloaded from: *http://www.whitehouse.gov/omb/grants/grants_forms.html*.

To receive amendments to this Solicitation, all applicants must register their name and address in writing with the Grant Officer at the following address: U.S. Department of Labor, Procurement Services Center, Attn: Cassandra Mitchell, Reference SGA # 05–01, 200 Constitution Avenue, NW., Room N–5416, Washington, DC 20210, Phone Number: (202) 693–4570 (not a toll-free number).

2. *Content and Form of Application:* In addition to the cover letter, the grant application must consist of three (3) separate and distinct sections: the Executive Summary, the Technical Proposal, and the Cost Proposal. The information provided in these three (3) sections is essential to gain an understanding of the programmatic and fiscal contents of the grant proposal. *A complete grant application package must not exceed 75 single-sided pages and is to include:*

- An original, blue ink-signed, and two (2) copies of the cover letter.
- An original and two (2) copies of the Executive Summary (see below).
- An original and two (2) copies of the Technical Proposal (see below) that includes a completed Technical Performance Goals Form (Appendix D). Also include all attachments with the technical proposal.
- An original and two (2) copies of the Cost Proposal (see below) that includes an original, blue ink-signed, Application for Federal Assistance, SF–424 (Appendix A), a Budget Narrative, Budget Information Sheet SF–424A (Appendix B), an original, blue ink-signed, Assurances and Certifications Signature Page (Appendix C), a Direct Cost Description for Applicants and Sub-applicants (Appendix E), and a completed Survey on Ensuring Equal Opportunity for Applicants (Appendix F).

A. *Section 1—Executive Summary:* A one to two page ''Executive Summary'' reflecting the grantee's overall strategy, timeline, and outcomes to be achieved in their grant proposal is required. The Executive Summary should include:

- The proposed area to be served through the activities of this grant.
- The years the grantee has served the residents in the proposed area to be served.
- The projects and activities that will expedite the reintegration of homeless veterans into the workforce.
- A summary of outcomes, benefits, and value added by the project.

B. *Section 2—Technical Proposal* consists of a narrative proposal that demonstrates the need for this particular grant program, the services and activities proposed to obtain successful outcomes for the homeless veterans to be served; and the applicant's ability to accomplish the expected outcomes of the proposed project design.

*The technical proposal narrative must not exceed fifteen (15) pages double-spaced, font size no less than 11 pt., no*

*less than 1 inch margins, and typewritten on one (1) side of the paper only.* Note: Resumes, charts, standard forms, transmittal letters, Memorandums of Understanding, agreements, lists of contracts and grants, and letters of support are not included in the technical proposal narrative page count. If provided, include these documents as attachments to the technical proposal. Attachments to the technical proposal are included in the maximum 75 single-sided pages per grant application limitation.

*Required Content:* There are program activities that all applications must contain to be found technically acceptable under this SGA. Programs must be ''employment-focused'' and must be responsive to the rating criteria in Section V(1). *The required program activities are:* participant outreach and project awareness activities, pre-enrollment assessments, employment development plans for each enrolled participant, case management, job placement, job retention follow-up (at 90 and 180 days) after individual enters employment, utilization and coordination of employment services through the One-Stop System, including the DVOP and LVER staff, and with community linkages with other programs that provide support to homeless veterans. These activities are described in section I.3. of this SGA.

*The following format for the technical proposal is recommended: Need for the program:* The applicant must identify the geographical area to be served and provide an estimate of the number of homeless veterans in the designated geographical area. Include poverty and unemployment rates in the area and identify the disparities in the local community infrastructure that exacerbate the employment barriers faced by the targeted veterans. Include labor market information and job opportunities in the employment fields and industries that are in demand in the geographical area to be served. Applicants are to clearly describe the proposed program awareness and participant outreach strategies.

*Approach or strategy to increase employment and job retention:* Applicants must be responsive to the Rating Criteria contained in Section V(1) and address all of the rating factors as thoroughly as possible in the narrative. *The applicant must:*

- Describe the specific supportive employment and training services to be provided under this grant and the sequence or flow of such services;
- Indicate the type(s) of training that will be provided under the grant and how it relates to the jobs that are in demand, length of training, training curriculum, and how the training will improve the eligible veterans' employment opportunities within that geographical area;
- Provide a follow-up plan that addresses retention after 90 and 180 days with participants who have entered employment;
- Include the completed Planned Quarterly Technical Performance Goals (and planned expenditures) form listed in Appendix D.

*Linkages with facilities that serve homeless veterans:* Describe program and resource linkages with other facilities that will be involved in identifying potential clients for this program. Describe any networks with other related resources and/or other programs that serve homeless veterans. Indicate how the program will be coordinated with any efforts that are conducted by public and private agencies in the community. Indicate how the applicant will coordinate with any continuum of care efforts for the homeless among agencies in the community. If a Memorandum of Understanding (MOU) or other service agreement with service providers exists, copies should be provided.

*Linkages with other providers of employment and training services to homeless veterans:* Describe the linkages, networks, and relationships the proposed program will have with other providers of services to homeless veterans; include a description of the relationship with other employment and training programs in the One Stop System such as Disabled Veterans' Outreach Program (DVOP), the Local Veterans' Employment Representative (LVER) program, and programs under the Workforce Investment Act such as the Veterans' Workforce Investment Program (VWIP); list the type of services that will be provided by each. Note the type of agreement in place, if applicable. Linkages with the workforce investment system are required. Describe any networks with any other resources and/or other programs for homeless veterans. If a Memorandum of Understanding (MOU) or other service agreement with other service providers exists, copies should be provided.

*Linkages with other Federal agencies:* Describe program and resource linkages with the Department of Housing and Urban Development (HUD), Department of Health and Human Services (HHS), and Department of Veterans Affairs (DVA), to include the Compensated Work Therapy (CWT) and per diem programs. If a Memorandum of Understanding (MOU) or other service agreement with other service providers exists, copies should be provided.

*Proposed supportive service strategy for veterans:* Describe how supportive service resources for veterans will be obtained and used. If resources are provided by other sources or linkages, such as Federal, State, local, or faith-based and community programs, the applicant must fully explain the use of these resources and how they will be applied. If a Memorandum of Understanding (MOU) or other service agreement with other service providers exist, copies should be provided.

*Organizational capability to provide required program activities:* The applicant's relevant current and prior experience (within the last three year period) in operating employment and training programs is to be clearly described, if applicable. A summary narrative of program experience and employment and training performance outcomes is required. *The applicant must provide information showing outcomes of employment and training programs that it has had in the past three (3) years in terms of enrollments and participants who have entered into employment.* An applicant that has operated a HVRP, other Homeless Employment and Training program, or VWIP program must also include the final or most recent technical performance report.

Please note that the Department of Labor grant review panel members, who will be reviewing all grant applications submitted as a result of this SGA, do *not* have access to any reporting information systems during the review process, therefore, if final or most recent technical performance reports are not submitted, the grant application may be considered non-responsive.

The applicant must also provide evidence of key staff capability. It is preferred that the grantee be a well established service provider and not in the initial start-up phase or process.

*Proposed housing strategy for homeless veterans:* Describe how housing resources for eligible homeless veterans will be obtained or accessed. These resources must be from linkages or sources other than the HVRP grant such as HUD, HHS, community housing resources, DVA leasing, or other programs.

C. *Section 3—The Cost Proposal must contain the following:* Applicants can expect that the cost proposal will be reviewed for allocability, allowability, and reasonableness.

(1) Standard Form SF–424, ''Application for Federal Assistance'' (with the original signed in blue-ink) (Appendix A) must be completed;

The Catalog of Federal Domestic Assistance number for this program is 17.805 and it must be entered on the SF–424, in Block 10.

The organizational unit section of Block 5 of the SF–424 must contain the Dun and Bradstreet Number (DUNS) of the applicant. Beginning October 1, 2003, all applicants for Federal grant funding opportunities are required to include a DUNS number with their application. *See* OMB Notice of Final Policy Issuance, 68 **Federal Register** 38402 (June 27, 2003). Applicants' DUNS number is to be entered into Block 5 of SF–424. The DUNS number is a nine-digit identification number that uniquely identifies business entities. There is no charge for obtaining a DUNS number. To obtain a DUNS number call 1–866–705–5711 or access the following Web site: *http://www.dunandbradstreet.com/* Requests for exemption from the DUNS number requirement must be made to the Office of Management and Budget.

(2) Standard Form SF–424A ''Budget Information Sheet'' (Appendix B) must be included;

(3) As an attachment to SF–424A, the applicant must provide a detailed cost breakout of each line item on the Budget Information Sheet. Please label this page or pages the ''Budget Narrative'' and ensure that costs reported on the SF–424A correspond accurately with the Budget Narrative;

*The Budget Narrative must include, at a minimum:*

- Breakout of all personnel costs by position, title, annual salary rates, and percent of time of each position to be devoted to the proposed project (including sub-grantees) by completing the ''Direct Cost Descriptions for Applicants and Sub-Applicants'' form (Appendix E);
- Explanation and breakout of extraordinary fringe benefit rates and associated charges (*i.e.*, rates exceeding 35% of salaries and wages);
- Explanation of the purpose and composition of, and method used to derive the costs of each of the following: travel, equipment, supplies, sub-awards/contracts, and any other costs. The applicant must include costs of any required travel described in this Solicitation. Planned travel expenditures will not exceed 5% of the total HVRP funds requested. Mileage charges may not exceed 40.5 cents per mile or the current Federal rate;
- All associated costs for obtaining and retaining participant information pertinent to the follow-up survey, at 90 and 180 days after the program performance period ends;
- Description/specification of, and justification for, equipment purchases, if any. Tangible, non-expendable, personal property having a useful life of more than one year and a unit acquisition cost of $5,000 or more per unit must be specifically identified; and
- Matching funds, leveraged funds, and in-kind services are not required for HVRP grants. However, if matching funds, leverage funds, or in-kind services are to be used, an identification of all sources of leveraged or matching funds and an explanation of the derivation of the value of matching/in-kind services must be provided. When resources such as matching funds, leveraged funds, and/or the value of in-kind contributions are made available, please show in Section B of the Budget Information Sheet.

(4) A completed Assurance and Certification signature page (Appendix C) (signed in blue ink) must be submitted;

(5) All applicants must submit evidence of satisfactory financial management capability, which must include recent (within the last 18 months) financial and/or audit statements. All successful grantees are required to utilize Generally Accepted Accounting Practices (GAAP), maintain a separate accounting for these grant funds, and have a checking account;

(6) All applicants must include, as a separate appendix, a list of all employment and training government grants and contracts that it has had in the past three (3) years, including grant/contract officer contact information. VETS reserves the right to have a DOL representative review and verify this data;

(7) A completed Survey on Ensuring Equal Opportunity for Applicants (Appendix F) must be provided.

3. *Submission Dates and Times* (Acceptable Methods of Submission): The grant application package must be received at the designated place by the date and time specified or it will not be considered. Any application received at the Office of Procurement Services after 4:45 p.m. EDT, April 28, 2005, will not be considered unless it is received before the award is made and:

- It is determined by the Government that the late receipt was due solely to mishandling by the Government after receipt at the U.S. Department of Labor at the address indicated; or
- It was sent by registered or certified mail not later than the fifth calendar day before April 28, 2005; or
- It was sent by U.S. Postal Service Express Mail Next Day Service-Post Office to Addressee, not later than 5 p.m. at the place of mailing two (2) working days, excluding weekends and Federal holidays, prior to April 28, 2005.

➢ Applicants may apply online at *http://grants.gov.* Applicants submitting proposals online are requested to refrain from mailing an application as well. Any application received after the deadline will not be considered and will not be evaluated.

4. *Intergovernmental Review:* Not Applicable.

5. *Funding Restrictions:*

A. Proposals exceeding $300,000 will be considered non-responsive and will not be evaluated.

B. There is a limit of one (1) application per submitting organization and physical location serving the same HVRP participant population. If two (2) applications from the same organization for the same physical location serving the same HVRP participant population are submitted, the application with the later date will be considered non-responsive. Please do not submit duplicate original grant applications as only one (1) grant application will be considered for funding purposes.

C. Due to the limited availability of funding, if an organization was awarded Fiscal Year 2003 or Fiscal Year 2004 HVRP funds for a specific physical location serving the same HVRP participant population and will be receiving second and possible third year funding, then that organization at that specific physical location serving the same HVRP participant population will be considered ineligible to compete for FY 2005 HVRP funds. Therefore, due to the limited funding availability, we are unable to award more than one (1) HVRP grant per organization at a specific physical location serving the same HVRP participant population.

D. There will not be reimbursement of pre-award costs unless specifically agreed upon in writing by the Department of Labor.

E. Entities described in Section 501(c)(4) of the Internal Revenue Code that engage in lobbying activities are not eligible to receive funds under this announcement because Section 18 of the Lobbying Disclosure Act of 1995, Public Law No. 104–65, 109 Stat. 691, prohibits the award of Federal funds to these entities.

F. The only potential areas that will be served through this urban competition for HVRPs in FY 2005 are the metropolitan areas of the 75 U.S. cities largest in population and the metropolitan area of San Juan, Puerto Rico (see Appendix I).

G. The U.S. Government is generally prohibited from providing direct financial assistance for inherently

religious activities. The grantee may work with and partner with religious institutions; however, direct Federal assistance provided under grants with the U.S. Department of Labor may not be used for religious instruction, worship, prayer, proselytizing or other inherently religious activities. 29 CFR part 2, Subpart D governs the treatment in government programs of religious organizations and religious activities; the grantee and sub-awardees are expected to be aware of and observe the regulations in this Subpart.

H. *Limitations on Administrative and Indirect Costs*

- Administrative costs, which consist of all direct and indirect costs associated with the supervision and management of the program, are limited to and will not exceed 20% of the total grant award.
- Indirect costs claimed by the applicant must be based on a Federally approved rate. A copy of the current negotiated approved and signed indirect cost negotiation agreement must be submitted with the application. Furthermore, indirect costs are considered a part of administrative costs for HVRP purposes and, therefore, may not exceed 20% of the total grant award.
- If the applicant does not presently have an approved indirect cost rate, a proposed rate with justification may be submitted. Successful applicants will be required to negotiate an acceptable and allowable rate within 90 days of grant award with the appropriate DOL Regional Office of Cost Determination or with the applicant's cognizant agency for indirect cost rates (*See* Office of Management and Budget web site at *http://www.whitehouse. gov/omb/grants/attach.html*).
- Indirect cost rates traceable and trackable through the State Workforce Agency's Cost Accounting System represent an acceptable means of allocating costs to DOL and, therefore, can be approved for use in grants to State Workforce Agencies.

6. *Other Submission Requirements:*

The only acceptable evidence to establish the date of mailing of a late application sent by registered or certified mail is the U.S. Postal Service postmark on the envelope or wrapper and on the original receipt from the U.S. Postal Service. If the postmark is not legible, an application received after the above closing time and date shall be processed as if mailed late. ''Postmark'' means a printed, stamped or otherwise placed impression (*not* a postage meter machine impression) that is readily identifiable without further action as having been applied and affixed by an employee of the U.S. Postal Service on the date of mailing. Therefore applicants should request that the postal clerk place a legible hand cancellation ''bull's-eye'' postmark on both the receipt and the envelope or wrapper. Applications cannot be accepted by e-mail or facsimile machine.

The only acceptable evidence to establish the date of mailing of a late application sent by U.S. Postal Service Express Mail Next Day Service-Post Office to Addressee is the date entered by the Post Office clerk on the ''Express Mail Next Day Service-Post Office to Addressee'' label and the postmark on the envelope or wrapper and on the original receipt from the U.S. Postal Service. ''Postmark'' has the same meaning as defined above. Therefore, applicants should request that the postal clerk place a legible hand cancellation ''bull's-eye'' postmark on both the receipt and the envelope or wrapper.

The only acceptable evidence to establish the time of receipt at the U.S. Department of Labor is the date/time stamp of the Procurement Services Center on the application wrapper or other documentary evidence or receipt maintained by that office. Applications sent by other delivery services, such as Federal Express, UPS, etc., will also be accepted.

*All applicants are advised that U.S. mail delivery in the Washington, DC area has been erratic due to security concerns. All applicants must take this into consideration when preparing to meet the application deadline, as you assume the risk for ensuring a timely submission, that is, if, because of these mail problems, the Department does not receive an application or receives it too late to give proper consideration, even if it was timely mailed, the Department is not required to consider the application.*

## V. Application Review Information

1. *Application Evaluation Criteria:* Applications will receive up to 110 total points based on the following criteria:

*A. Need for the Project: 10 Points*

The applicant will document the need for this project, as demonstrated by: (i) The potential number or concentration of homeless individuals and homeless veterans in the proposed project area relative to other similar areas; (ii) the rates of poverty and/or unemployment in the proposed project area as determined by the census or other surveys; and (iii) the extent of the gaps in the local infrastructure to effectively address the employment barriers that characterize the target population.

*B. Overall Strategy To Increase Employment and Retention in Employment: 35 Points [and Up to 10 Additional Points (for a Total of 45 Points) if Overall Strategy Includes an Approach for Addressing Barriers to Employment Faced by Homeless Female Veterans as Described Below.]*

The application must include a description of the approach to providing comprehensive employment and training services, including job training, job development, obtaining employer commitments to hire, placement, and post-placement follow-up services. Applicants must address how they will target occupations in emerging industries. Supportive services provided as part of the strategy of promoting job readiness and job retention must be indicated. The applicant must identify the local services and sources of training to be used for participants. At least 80% of enrolled participants must participate in training activities. A description of the relationship with other employment and training programs delivered through the One-Stop Career Center System must be specified. Applicants must indicate how the activities will be tailored or responsive to the needs of homeless veterans. A participant flow chart may be used to show the sequence and mix of services.

*Additional Points:* Up to an additional 10 points under this section will be awarded to grant proposals that focus some of their effort on addressing the barriers to employment faced by homeless female veterans. For such purposes, it is recommended that grant applicants have an established network of service providers to assist the children of homeless veterans, including but not limited to, housing, child care, medical care, etc. It is recommended that formal Memorandum of Understandings with providers of children services be established and attached to the grant application request.

**Note:** The applicant must complete Appendix D, the Recommended Format for Planned Quarterly Technical Performance Goals, with proposed programmatic outcomes, including participants served, placement/entered employments and job retention.

*C. Quality and Extent of Linkages With Other Providers of Services to the Homeless and to Veterans: 20 Points*

The application must provide information on the quality and extent of the linkages this program will have with other providers of services to homeless veterans in the local community including faith-based and community

organizations. For each service, the applicant must specify who the provider is, the source of funding (if known), and the type of linkages/referral system established or proposed. Describe, to the extent possible, how the project would be incorporated into the community's continuum of care approach and/or the ten (10) year plan to end homelessness. Describe how the proposed project links to the appropriate State Workforce Agency and One-Stop Center(s) including coordination and collaboration with DVOP/LVER and other One Stop Center staff, HUD, HHS, DVA, and/or other local community based programs and the services that will be provided as necessary on behalf of the homeless veteran participants to be served.

*D. Demonstrated Capability in Providing Required Program Services, Including Programmatic Reporting and Participant Tracking: 25 Points*

The applicant must describe its relevant prior experience in operating employment and training programs and providing services to participants similar to those that are proposed under this solicitation. Specific outcomes previously achieved by the applicant must be described, such as job placements, benefits secured, network coalitions, etc. The applicant must also address its capacity for timely startup of the program, programmatic reporting, and participant tracking. The applicant should describe its staff experience and ability to manage the administrative, programmatic and financial aspects of a grant program. Include a recent (within the last 18 months) financial statement or audit. Final or most recent technical reports for other relevant programs must be submitted, if applicable. Because prior HVRP experience is not a requirement for this grant, some applicants may not have any HVRP technical performance reports to submit but may have other similar type programmatic performance reports to submit as evidence of experience in operating other employment and training type programs.

*E. Quality of Overall Housing Strategy: 10 Points*

The application must demonstrate how the applicant proposes to obtain or access housing resources for veterans in the program and entering the labor force. This discussion should specify the provisions made to access temporary, transitional, and permanent housing for participants through community resources, HUD, DVA lease, or other means. *HVRP funds may not be used for housing purposes or purchasing or leasing of vehicles.*

2. *Review and Selection Process:*

Applications will initially be screened to ensure timeliness, completeness, and compliance with the SGA requirements. Applications that satisfy this initial screening will receive further review as explained below.

Technical proposals will be reviewed by a Department of Labor grant review panel using the point scoring system specified above in Section V(1). The review panel will assign scores after careful evaluation by each panel member and rank applications based on this score. The ranking will be the primary basis to identify applicants as potential grantees. The review panel may establish a competitive range, based upon the proposal evaluation, for the purpose of selecting qualified applicants. The review panel may further evaluate grant applications deemed within the competitive range by assigning a point system for proposed grantee performance goals in order to compare goals of other grant applications deemed within the competitive range. The review panel's conclusions are advisory in nature and not binding on the Grant Officer.

Cost proposals will be considered in two (2) ways. The Department of Labor review panel will screen all applicant cost proposals to ensure expenses are allocable, allowable, and reasonable. If the review panel concludes that the cost proposal contains an expense(s) that is not allocable, allowable, and/or reasonable, the application may be considered ineligible for funding. Further, VETS and the Grant Officer will consider applicant information concerning the proposed cost per placement, percentage of participants placed into unsubsidized employment, average wage at placement, 90 and 180-day retention in employment percentages, and geographical balance. The national average cost per placement for HVRP for last year was $2,200.

The Government reserves the right to ask for clarification on any aspect of a grant application. The Government also reserves the right to discuss any potential grantee concerns amongst Department of Labor staff. The Government further reserves the right to select applicants out of rank order if such a selection would, in its opinion, result in the most effective and appropriate combination of funding, program, and administrative costs, e.g., cost per enrollment and placement, demonstration models, and geographic service areas. The Grant Officer's determination for award under SGA #05–01 is the final agency action. The submission of the same proposal from any prior year HVRP competition does not guarantee an award under this Solicitation.

## VI. Award Administration Information

*1. Award Notices*

A. The Notice of Award signed by the Grant Officer is the authorizing document and will be provided through postal mail and/or by electronic means to the authorized representative listed on the SF–424 Grant Application. Notice that an organization has been selected as a grant recipient does not constitute approval of the grant application as submitted. Before the actual grant award, the Grant Officer may enter into negotiations concerning such items as program components, funding levels, and administrative systems. If the negotiations do not result in an acceptable submittal, the Grant Officer reserves the right to terminate the negotiation and decline to fund the proposal.

B. A post-award conference will be held for those grantees awarded FY 2005 HVRP funds through this competition. The post-award conference is expected to be held in August 2005 and up to two (2) representatives must be present. The site of the post-award conference has not yet been determined, however, for planning and budgeting purposes, please allot five (5) days and use Denver, Colorado as the conference site. The post-award conference will focus on providing information and assistance on reporting, recordkeeping, grant requirements, and also include networking opportunities to learn of best practices from more experienced and successful grantees. Costs associated with attending this conference for up to two (2) grantee representatives will be allowed as long as they are incurred in accordance with Federal travel regulations. Such costs must be charged as administrative costs and reflected in the proposed budget.

*2. Administrative and National Policy Requirements*

Unless specifically provided in the grant agreement, DOL's acceptance of a proposal and an award of Federal funds to sponsor any program(s) does not provide a waiver of any grant requirements and/or procedures. For example, the OMB circulars require that an entity's procurement procedures must provide all procurement transactions will be conducted, as practical, to provide open and free competition. If a proposal identifies a specific entity to provide the services, the DOL award does not provide the

justification or basis to sole-source the procurement, *i.e.*, avoid competition. All grants will be subject to the following administrative standards and provisions, as applicable to the particular grantee:

- 29 CFR part 2, Subpart D—Equal Treatment in Department of Labor Programs for Faith-Based and Community Organizations; Protection of Religious Liberty of Department of Labor Social Service Providers and Beneficiaries.
- 29 CFR part 31—Nondiscrimination in Federally Assisted Programs of the Department of Labor—Effectuation of Title VI of the Civil Rights Act of 1964.
- 29 CFR part 32—Nondiscrimination on the Basis of Handicap in Programs or Activities Receiving or Benefiting from Federal Financial Assistance.
- 29 CFR part 33—Enforcement of Nondiscrimination on the Basis of Handicap in Programs or Activities Conducted by the Department of Labor.
- 29 CFR part 35—Nondiscrimination on the Basis of Age in Programs and Activities Receiving Federal Financial Assistance from the Department of Labor.
- 29 CFR part 36—Nondiscrimination on the Basis of Sex in Education Programs or Activities Receiving Federal Assistance.
- 29 CFR part 37—Implementation of the Nondiscrimination and Equal Opportunity Provisions of the Workforce Investment Act of 1998.
- 29 CFR part 93—Lobbying.
- 29 CFR part 95—Uniform Administrative Requirements for Grants and Agreements with Institutions of Higher Education, Hospitals, and other Nonprofit Organizations, and with Commercial Organizations.
- 29 CFR part 96—Federal Standards for Audit of Federally Funded Grants, Contracts and Agreements.
- 29 CFR part 97—Uniform Administrative Requirements for Grants and Cooperative Agreements to State and Local Governments.
- 29 CFR part 98—Federal Standards for Government-wide Debarment and Suspension (Non procurement) and Government-wide Requirements for Drug-Free Workplace (Grants).
- 29 CFR part 99—Audit of States, Local Governments, and Nonprofit Organization.
- Applicable cost principles under OMB Circulars A–21, A–87, A–122, or 48 CFR part 31.

*3. Reporting*

The grantee will submit the reports and documents listed below:

A. Quarterly Financial Reports

No later than 30 days after the end of each Federal fiscal quarter, the grantee must report outlays, program income, and other financial information on a federal fiscal quarterly basis using SF–269A, Financial Status Report, Short Form, and submit a copy of the HHS/PMS 272 draw down report. These reports must cite the assigned grant number and be submitted to the appropriate State Director for Veterans' Employment and Training (DVET).

B. Quarterly Program Reports

No later than 30 days after the end of each Federal fiscal quarter, grantees also must submit a Quarterly Technical Performance Report to the DVET that contains the following:

(1) A comparison of actual accomplishments to planned goals for the reporting period and any findings related to monitoring efforts;

(2) An explanation for variances of plus or minus 15% of planned program and/or expenditure goals, to include: identification of corrective action that will be taken to meet the planned goals, if required; and a timetable for accomplishment of the corrective action.

C. 90-Day Final Performance Report

No later than 120 days after the grant performance expiration date, the grantee must submit a final report showing results and performance as of the 90th day after the grant period, and containing the following:

(1) Final Financial Status Report SF–269A Short Form (that zeros out all unliquidated obligations); and

(2) Final Technical Performance Report comparing goals vs. actual performance levels.

D. 180-Day Follow-Up Report/Longitudinal Survey

No later than 210 days after the grant performance expiration date, the grantee must submit a Follow-Up Report/Longitudinal Survey showing results and performance as of the 180th day after the grant expiration date, and containing the following:

(1) Final Financial Status Report SF–269A Short Form (if not previously submitted); and

(2) 180-Day Follow-Up Report/Longitudinal Survey identifying:

(a) The total combined (directed/assisted) number of veterans placed into employment during the entire grant period;

(b) The number of veterans still employed after the 90 and 180 day follow-up period;

(c) If the veterans are still employed at the same or similar job, and if not, what are the reason(s);

(d) Whether training received was applicable to jobs held;

(e) Wages at placement and at the 90 and 180 day follow-up period;

(f) An explanation of why those veterans placed during the grant, but not employed at the end of the follow-up period, are not so employed; and

(g) Any recommendations to improve the program.

**VII. Agency Contact**

*Questions and applications are to be forwarded to:* Department of Labor, Procurement Services Center, Attention: Cassandra Mitchell, Reference SGA # 05–01, 200 Constitution Avenue NW., Room N–5416, Washington, DC 20210, phone number: (202) 693–4570 (this is not a toll-free number).

*Resources for the Applicant:* Applicants may review ''VETS'' Guide to Competitive and Discretionary Grants'' located at *http://www.dol.gov/vets/ grants/Final_VETS_Guide-linked.pdf*. Applicants may also find these resources useful: The Department of Labor's Homeless and Service Providers of Homeless Information site at *http://www2.dol.gov/dol/audience/aud-homeless.htm*, America's Service Locator *http://www.servicelocator.org/* provides a directory of our nation's One-Stop Career Centers. The National Association of Workforce Boards maintains an Web site (*http://www.nawb.org/asp/wibdir.asp*) that contains contact information for the State and local Workforce Investment Boards. The web page for the Department of Labor, Center for Faith-Based & Community Initiatives (*http://www.dol.gov/cfbci*).

*Comments:* Comments are to be submitted to the Veterans' Employment and Training Service (VETS), U.S. Department of Labor, Room S–1312, 200 Constitution Avenue, NW., Washington, DC 20210, telephone (202) 693–4701. Written comments are limited to ten (10) pages or fewer and may be transmitted by facsimile to (202) 693–4755. Receipt of submissions, whether by U.S. mail, e-mail, or facsimile transmittal, will not be automatically acknowledged; however, the sender may request confirmation that a submission has been received, by telephoning VETS at (202) 693–4701 or (202) 693–4753 (TTY/TDD).

**APPLICATION FOR FEDERAL ASSISTANCE**

Version 7/03

| | | | |
|---|---|---|---|
| **1. TYPE OF SUBMISSION:** Application ☐ Construction ☐ Non-Construction | Pre-application ☐ Construction ☐ Non-Construction | **2. DATE SUBMITTED** | Applicant Identifier |
| | | **3. DATE RECEIVED BY STATE** | State Application Identifier |
| | | **4. DATE RECEIVED BY FEDERAL AGENCY** | Federal Identifier |

**5. APPLICANT INFORMATION**

| | |
|---|---|
| Legal Name: | **Organizational Unit:** Department: |
| Organizational DUNS: | Division: |
| **Address:** Street: | **Name and telephone number of person to be contacted on matters involving this application (give area code)** Prefix: First Name: |
| City: | Middle Name |
| County: | Last Name |
| State: Zip Code | Suffix: |
| Country: | Email: |
| **6. EMPLOYER IDENTIFICATION NUMBER** *(EIN)*: ☐☐-☐☐☐☐☐☐☐ | Phone Number (give area code) Fax Number (give area code) |
| **8. TYPE OF APPLICATION:** ☐ New ☐ Continuation ☐ Revision If Revision, enter appropriate letter(s) in box(es) (See back of form for description of letters.) ☐ ☐ Other (specify) | **7. TYPE OF APPLICANT:** (See back of form for Application Types) Other (specify) **9. NAME OF FEDERAL AGENCY:** |
| **10. CATALOG OF FEDERAL DOMESTIC ASSISTANCE NUMBER:** ☐☐-☐☐☐ TITLE (Name of Program): | **11. DESCRIPTIVE TITLE OF APPLICANT'S PROJECT:** |
| **12. AREAS AFFECTED BY PROJECT** *(Cities, Counties, States, etc.)*: | |
| **13. PROPOSED PROJECT** Start Date: Ending Date: | **14. CONGRESSIONAL DISTRICTS OF:** a. Applicant b. Project |

| **15. ESTIMATED FUNDING:** | | **16. IS APPLICATION SUBJECT TO REVIEW BY STATE EXECUTIVE ORDER 12372 PROCESS?** |
|---|---|---|
| a. Federal | $ .00 | a. Yes. ☐ THIS PREAPPLICATION/APPLICATION WAS MADE AVAILABLE TO THE STATE EXECUTIVE ORDER 12372 PROCESS FOR REVIEW ON DATE: |
| b. Applicant | $ .00 | |
| c. State | $ .00 | |
| d. Local | $ .00 | b. No. ☐ PROGRAM IS NOT COVERED BY E. O. 12372 |
| e. Other | $ .00 | ☐ OR PROGRAM HAS NOT BEEN SELECTED BY STATE FOR REVIEW |
| f. Program Income | $ .00 | **17. IS THE APPLICANT DELINQUENT ON ANY FEDERAL DEBT?** |
| g. TOTAL | $ .00 | ☐ Yes If "Yes" attach an explanation. ☐ No |

**18. TO THE BEST OF MY KNOWLEDGE AND BELIEF, ALL DATA IN THIS APPLICATION/PREAPPLICATION ARE TRUE AND CORRECT. THE DOCUMENT HAS BEEN DULY AUTHORIZED BY THE GOVERNING BODY OF THE APPLICANT AND THE APPLICANT WILL COMPLY WITH THE ATTACHED ASSURANCES IF THE ASSISTANCE IS AWARDED.**

a. Authorized Representative

| | | |
|---|---|---|
| Prefix | First Name | Middle Name |
| Last Name | | Suffix |
| b. Title | | c. Telephone Number (give area code) |
| d. Signature of Authorized Representative | | e. Date Signed |

Previous Edition Usable
Authorized for Local Reproduction

Standard Form 424 (Rev.9-2003)
Prescribed by OMB Circular A-102

## INSTRUCTIONS FOR THE SF-424

Public reporting burden for this collection of information is estimated to average 45 minutes per response, including time for reviewing instructions, searching existing data sources, gathering and maintaining the data needed, and completing and reviewing the collection of information. Send comments regarding the burden estimate or any other aspect of this collection of information, including suggestions for reducing this burden, to the Office of Management and Budget, Paperwork Reduction Project (0348-0043), Washington, DC 20503.

**PLEASE DO NOT RETURN YOUR COMPLETED FORM TO THE OFFICE OF MANAGEMENT AND BUDGET. SEND IT TO THE ADDRESS PROVIDED BY THE SPONSORING AGENCY.**

This is a standard form used by applicants as a required face sheet for pre-applications and applications submitted for Federal assistance. It will be used by Federal agencies to obtain applicant certification that States which have established a review and comment procedure in response to Executive Order 12372 and have selected the program to be included in their process, have been given an opportunity to review the applicant's submission.

| Item: | Entry: | Item: | Entry: |
|---|---|---|---|
| 1. | Select Type of Submission. | 11. | Enter a brief descriptive title of the project. If more than one program is involved, you should append an explanation on a separate sheet. If appropriate (e.g., construction or real property projects), attach a map showing project location. For preapplications, use a separate sheet to provide a summary description of this project. |
| 2. | Date application submitted to Federal agency (or State if applicable) and applicant's control number (if applicable). | 12. | List only the largest political entities affected (e.g., State, counties, cities). |
| 3. | State use only (if applicable). | 13 | Enter the proposed start date and end date of the project. |
| 4. | Enter Date Received by Federal Agency<br>Federal identifier number: If this application is a continuation or revision to an existing award, enter the present Federal Identifier number. If for a new project, leave blank. | 14. | List the applicant's Congressional District and any District(s) affected by the program or project |
| 5. | Enter legal name of applicant, name of primary organizational unit (including division, if applicable), which will undertake the assistance activity, enter the organization's DUNS number (received from Dun and Bradstreet), enter the complete address of the applicant (including country), and name, telephone number, e-mail and fax of the person to contact on matters related to this application. | 15 | Amount requested or to be contributed during the first funding/budget period by each contributor. Value of in kind contributions should be included on appropriate lines as applicable. If the action will result in a dollar change to an existing award, indicate only the amount of the change. For decreases, enclose the amounts in parentheses. If both basic and supplemental amounts are included, show breakdown on an attached sheet. For multiple program funding, use totals and show breakdown using same categories as item 15. |
| 6. | Enter Employer Identification Number (EIN) as assigned by the Internal Revenue Service. | 16. | Applicants should contact the State Single Point of Contact (SPOC) for Federal Executive Order 12372 to determine whether the application is subject to the State intergovernmental review process. |
| 7. | Select the appropriate letter in the space provided.<br>A. State<br>B. County<br>C. Municipal<br>D. Township<br>E. Interstate<br>F. Intermunicipal<br>G. Special District<br>H. Independent School District<br>I. State Controlled Institution of Higher Learning<br>J. Private University<br>K. Indian Tribe<br>L. Individual<br>M. Profit Organization<br>N. Other (Specify)<br>O. Not for Profit Organization | 17. | This question applies to the applicant organization, not the person who signs as the authorized representative. Categories of debt include delinquent audit disallowances, loans and taxes. |
| 8. | Select the type from the following list:<br>• "New" means a new assistance award.<br>• "Continuation" means an extension for an additional funding/budget period for a project with a projected completion date.<br>• "Revision" means any change in the Federal Government's financial obligation or contingent liability from an existing obligation. If a revision enter the appropriate letter:<br>A. Increase Award B. Decrease Award<br>C. Increase Duration D. Decrease Duration | 18 | To be signed by the authorized representative of the applicant. A copy of the governing body's authorization for you to sign this application as official representative must be on file in the applicant's office. (Certain Federal agencies may require that this authorization be submitted as part of the application.) |
| 9. | Name of Federal agency from which assistance is being requested with this application. | | |
| 10. | Use the Catalog of Federal Domestic Assistance number and title of the program under which assistance is requested. | | |

## BUDGET INFORMATION - Non-Construction Programs

OMB Approval No. 0348-0044

**SECTION A - BUDGET SUMMARY**

| Grant Program Function or Activity (a) | Catalog of Federal Domestic Assistance Number (b) | Estimated Unobligated Funds | | New or Revised Budget | | |
|---|---|---|---|---|---|---|
| | | Federal (c) | Non-Federal (d) | Federal (e) | Non-Federal (f) | Total (g) |
| 1. | | $ | $ | $ | $ | $ 0.00 |
| 2. | | | | | | 0.00 |
| 3. | | | | | | 0.00 |
| 4. | | | | | | 0.00 |
| 5. Totals | | $ 0.00 | $ 0.00 | $ 0.00 | $ 0.00 | $ 0.00 |

**SECTION B - BUDGET CATEGORIES**

| 6. Object Class Categories | GRANT PROGRAM, FUNCTION OR ACTIVITY | | | | Total |
|---|---|---|---|---|---|
| | (1) | (2) | (3) | (4) | (5) |
| a. Personnel | $ | $ | $ | $ | $ 0.00 |
| b. Fringe Benefits | | | | | 0.00 |
| c. Travel | | | | | 0.00 |
| d. Equipment | | | | | 0.00 |
| e. Supplies | | | | | 0.00 |
| f. Contractual | | | | | 0.00 |
| g. Construction | | | | | 0.00 |
| h. Other | | | | | 0.00 |
| i. Total Direct Charges *(sum of 6a-6h)* | 0.00 | 0.00 | 0.00 | 0.00 | 0.00 |
| j. Indirect Charges | | | | | 0.00 |
| k. TOTALS *(sum of 6i and 6j)* | $ 0.00 | $ 0.00 | $ 0.00 | $ 0.00 | $ 0.00 |
| 7. Program Income | $ | $ | $ | $ | $ 0.00 |

**Authorized for Local Reproduction**

**Previous Edition Usable**

Standard Form 424A (Rev. 7-97)
Prescribed by OMB Circular A-102

| SECTION C - NON-FEDERAL RESOURCES | | | | |
|---|---|---|---|---|
| (a) Grant Program | (b) Applicant | (c) State | (d) Other Sources | (e) TOTALS |
| 8. | $ | $ | $ | $ 0.00 |
| 9. | | | | 0.00 |
| 10. | | | | 0.00 |
| 11. | | | | 0.00 |
| 12. TOTAL *(sum of lines 8-11)* | $ 0.00 | $ 0.00 | $ 0.00 | $ 0.00 |

| SECTION D - FORECASTED CASH NEEDS | | | | | |
|---|---|---|---|---|---|
| | Total for 1st Year | 1st Quarter | 2nd Quarter | 3rd Quarter | 4th Quarter |
| 13. Federal | $ 0.00 | $ | $ | $ | $ |
| 14. Non-Federal | 0.00 | | | | |
| 15. TOTAL *(sum of lines 13 and 14)* | $ 0.00 | $ 0.00 | $ 0.00 | $ 0.00 | $ 0.00 |

| SECTION E - BUDGET ESTIMATES OF FEDERAL FUNDS NEEDED FOR BALANCE OF THE PROJECT | | | | |
|---|---|---|---|---|
| (a) Grant Program | FUTURE FUNDING PERIODS (Years) | | | |
| | (b) First | (c) Second | (d) Third | (e) Fourth |
| 16. | $ | $ | $ | $ |
| 17. | | | | |
| 18. | | | | |
| 19. | | | | |
| 20. TOTAL *(sum of lines 16-19)* | $ 0.00 | $ 0.00 | $ 0.00 | $ 0.00 |

| SECTION F - OTHER BUDGET INFORMATION | |
|---|---|
| 21. Direct Charges: | 22. Indirect Charges: |
| 23. Remarks: | |

**Authorized for Local Reproduction**

**Standard Form 424A (Rev. 7-97)**

## INSTRUCTIONS FOR THE SF-424A

Public reporting burden for this collection of information is estimated to average 180 minutes per response, including time for reviewing instructions, searching existing data sources, gathering and maintaining the data needed, and completing and reviewing the collection of information. Send comments regarding the burden estimate or any other aspect of this collection of information, including suggestions for reducing this burden, to the Office of Management and Budget, Paperwork Reduction Project (0348-0044), Washington, DC 20503.

**PLEASE DO NOT RETURN YOUR COMPLETED FORM TO THE OFFICE OF MANAGEMENT AND BUDGET. SEND IT TO THE ADDRESS PROVIDED BY THE SPONSORING AGENCY.**

**General Instructions**

This form is designed so that application can be made for funds from one or more grant programs. In preparing the budget, adhere to any existing Federal grantor agency guidelines which prescribe how and whether budgeted amounts should be separately shown for different functions or activities within the program. For some programs, grantor agencies may require budgets to be separately shown by function or activity. For other programs, grantor agencies may require a breakdown by function or activity. Sections A, B, C, and D should include budget estimates for the whole project except when applying for assistance which requires Federal authorization in annual or other funding period increments. In the latter case, Sections A, B, C, and D should provide the budget for the first budget period (usually a year) and Section E should present the need for Federal assistance in the subsequent budget periods. All applications should contain a breakdown by the object class categories shown in Lines a-k of Section B.

**Section A. Budget Summary Lines 1-4 Columns (a) and (b)**

For applications pertaining to a *single* Federal grant program (Federal Domestic Assistance Catalog number) and *not requiring* a functional or activity breakdown, enter on Line 1 under Column (a) the Catalog program title and the Catalog number in Column (b).

For applications pertaining to a *single* program *requiring* budget amounts by multiple functions or activities, enter the name of each activity or function on each line in Column (a), and enter the Catalog number in Column (b). For applications pertaining to multiple programs where none of the programs require a breakdown by function or activity, enter the Catalog program title on each line in *Column* (a) and the respective Catalog number on each line in Column (b).

For applications pertaining to *multiple* programs where one or more programs *require* a breakdown by function or activity, prepare a separate sheet for each program requiring the breakdown. Additional sheets should be used when one form does not provide adequate space for all breakdown of data required. However, when more than one sheet is used, the first page should provide the summary totals by programs.

**Lines 1-4, Columns (c) through (g)**

*For new applications*, leave Column (c) and (d) blank. For each line entry in Columns (a) and (b), enter in Columns (e), (f), and (g) the appropriate amounts of funds needed to support the project for the first funding period (usually a year).

*For continuing grant program applications*, submit these forms before the end of each funding period as required by the grantor agency. Enter in Columns (c) and (d) the estimated amounts of funds which will remain unobligated at the end of the grant funding period only if the Federal grantor agency instructions provide for this. Otherwise, leave these columns blank. Enter in columns (e) and (f) the amounts of funds needed for the upcoming period. The amount(s) in Column (g) should be the sum of amounts in Columns (e) and (f).

*For supplemental grants and changes* to existing grants, do not use Columns (c) and (d). Enter in Column (e) the amount of the increase or decrease of Federal funds and enter in Column (f) the amount of the increase or decrease of non-Federal funds. In Column (g) enter the new total budgeted amount (Federal and non-Federal) which includes the total previous authorized budgeted amounts plus or minus, as appropriate, the amounts shown in Columns (e) and (f). The amount(s) in Column (g) should not equal the sum of amounts in Columns (e) and (f).

**Line 5** - Show the totals for all columns used.

**Section B Budget Categories**

In the column headings (1) through (4), enter the titles of the same programs, functions, and activities shown on Lines 1-4, Column (a), Section A. When additional sheets are prepared for Section A, provide similar column headings on each sheet. For each program, function or activity, fill in the total requirements for funds (both Federal and non-Federal) by object class categories.

**Line 6a-i** - Show the totals of Lines 6a to 6h in each column.

**Line 6j** - Show the amount of indirect cost.

**Line 6k** - Enter the total of amounts on Lines 6i and 6j. For all applications for new grants and continuation grants the total amount in column (5), Line 6k, should be the same as the total amount shown in Section A, Column (g), Line 5. For supplemental grants and changes to grants, the total amount of the increase or decrease as shown in Columns (1)-(4), Line 6k should be the same as the sum of the amounts in Section A, Columns (e) and (f) on Line 5.

**Line 7** - Enter the estimated amount of income, if any, expected to be generated from this project. Do not add or subtract this amount from the total project amount, Show under the program

**INSTRUCTIONS FOR THE SF-424A** (continued)

narrative statement the nature and source of income. The estimated amount of program income may be considered by the Federal grantor agency in determining the total amount of the grant.

**Section C. Non-Federal Resources**

**Lines 8-11** Enter amounts of non-Federal resources that will be used on the grant. If in-kind contributions are included, provide a brief explanation on a separate sheet.

**Column (a)** - Enter the program titles identical to Column (a), Section A. A breakdown by function or activity is not necessary.

**Column (b)** - Enter the contribution to be made by the applicant.

**Column (c)** - Enter the amount of the State's cash and in-kind contribution if the applicant is not a State or State agency. Applicants which are a State or State agencies should leave this column blank.

**Column (d)** - Enter the amount of cash and in-kind contributions to be made from all other sources.

**Column (e)** - Enter totals of Columns (b), (c), and (d).

**Line 12** - Enter the total for each of Columns (b)-(e). The amount in Column (e) should be equal to the amount on Line 5, Column (f), Section A.

**Section D. Forecasted Cash Needs**

**Line 13** - Enter the amount of cash needed by quarter from the grantor agency during the first year.

**Line 14** - Enter the amount of cash from all other sources needed by quarter during the first year.

**Line 15** - Enter the totals of amounts on Lines 13 and 14.

**Section E. Budget Estimates of Federal Funds Needed for Balance of the Project**

**Lines 16-19** - Enter in Column (a) the same grant program titles shown in Column (a), Section A. A breakdown by function or activity is not necessary. For new applications and continuation grant applications, enter in the proper columns amounts of Federal funds which will be needed to complete the program or project over the succeeding funding periods (usually in years). This section need not be completed for revisions (amendments, changes, or supplements) to funds for the current year of existing grants.

If more than four lines are needed to list the program titles, submit additional schedules as necessary.

**Line 20** - Enter the total for each of the Columns (b)-(e). When additional schedules are prepared for this Section, annotate accordingly and show the overall totals on this line.

**Section F. Other Budget Information**

**Line 21** - Use this space to explain amounts for individual direct object class cost categories that may appear to be out of the ordinary or to explain the details as required by the Federal grantor agency.

**Line 22** - Enter the type of indirect rate (provisional, predetermined, final or fixed) that will be in effect during the funding period, the estimated amount of the base to which the rate is applied, and the total indirect expense.

**Line 23** - Provide any other explanations or comments deemed necessary.

## CERTIFICATIONS AND ASSURANCES

### ASSURANCES AND CERTIFICATIONS SIGNATURE PAGE

The Department of Labor will not award a grant or agreement where the grantee/recipient has failed to accept the ASSURANCES AND CERTIFICATIONS contained in this section. By signing and returning this signature page, the grantee/recipient is providing the certifications set forth below:

A. Certification Regarding Lobbying, Debarment, Suspension, Other Responsibility Matters - Primary Covered Transactions and Certifications Regarding Drug-Free/Tobacco-Free Workplace,

B. Certification of Release of Information

C. Assurances - Non-Construction Programs

D. Applicant is not a 501(c)(4) organization

APPLICANT NAME and LEGAL ADDRESS:

If there is any reason why one of the assurances or certifications listed cannot be signed, please explain. Applicant need only submit and return this signature page with the grant application. All other instruction shall be kept on file by the applicant.

SIGNATURE OF AUTHORIZED CERTIFYING OFFICIAL TITLE

APPLICANT ORGANIZATION DATE SUBMITTED

**Please Note:** **This signature page and any pertinent attachments which may be required by these assurances and certifications shall be attached to the applicant's Cost Proposal.**

## Recommended Format for Planned Quarterly Technical Performance Goals

**Grantee Name:**_____ **Period of Performance:** _____

| **Performance Goals:** Quarters | Enter All Data Cumulatively 1 | 2 | 3 | 4 | 90 DAY FINAL | 180 F/U |
|---|---|---|---|---|---|---|
| Assessments | | | | | | |
| Participants Enrolled | | | | | | |
| Placed in Trans. or Perm Housing | | | | | | |
| Number Referred to VA for Benefits | | | | | | |
| Number Placed into Employment | | | | | | |
| Cost Per Placement | | | | | | |
| Number Retaining Jobs for 90 days | | | | | | |
| Number Retaining Jobs for 180 days | | | | | | |
| Placement Rate | | | | | | |
| Average Wage at Placement | | | | | | |

| **Training Activities:** Quarters | 1 | 2 | 3 | 4 | 90 DAY FINAL |
|---|---|---|---|---|---|
| Class Room Training | | | | | |
| On-the-Job Training | | | | | |
| Remedial Education | | | | | |
| Literacy and Bilingual Training | | | | | |
| Institutional Skills Training | | | | | |
| Occupational Skills Training | | | | | |
| On-Site Industry Specific Training | | | | | |
| Customized Training | | | | | |
| Apprenticeship Training | | | | | |
| Upgrading and Retraining | | | | | |
| Life Skills and Money Management | | | | | |
| Other Training | | | | | |

| **Supportive Services:** Quarters | 1 | 2 | 3 | 4 | 90 DAY FINAL |
|---|---|---|---|---|---|
| Case Management | | | | | |
| Job Search Assistance | | | | | |
| Counseling/Vocational Guidance | | | | | |
| Job Club Workshops | | | | | |
| Unpaid Work Experience | | | | | |
| Compensated Work Therapy | | | | | |
| Tools/Fees/Specific Work Clothing | | | | | |
| Other Supportive Services | | | | | |

| **Planned Expenditures:** Quarters | 1 | 2 | 3 | 4 | 90 DAY FINAL |
|---|---|---|---|---|---|
| *Participant Services | | | | | |
| Admin Costs (Not to exceed 20% of total grant award) | | | | | |
| Stand Down (Not to Exceed $5K) | | | | | |
| Total HVRP Expenditures | | | | | |

* Participant Services includes participant training and supportive services expenditures.

March 2005

Direct Cost Descriptions For Applicants and Sub-Applicants*

| Position Title(s ) | Annual Salary/Wage Rate | % of Time Charged to Grant | Proposed Administration Costs ** | Proposed Program Costs |
|---|---|---|---|---|
| | | | | |
| | | | | |
| | | | | |
| | | | | |
| | | | | |
| | | | | |
| | | | | |
| | | | | |
| | | | | |
| | | | | |

Sub-Total _____

| | Administration | Program |
|---|---|---|
| Fringe Benefits For All Positions | | _____ |
| Contractual | | _____ |
| Travel | | _____ |
| Indirect Costs | | _____ |
| Equipment | | _____ |
| Supplies | | |

Total Costs ---------- _____

| | Administration | Program |
|---|---|---|

** Administrative costs are associated with the supervision and management of the program and do not directly or immediately affect participants.

* Direct costs for all funded positions for both applicant and sub-applicant(s) must be provided.

# SURVEY ON ENSURING EQUAL OPPORTUNITY FOR APPLICANTS

*Federal Agency Use Only*

OMB No. 1225-0083 Exp. 02/28/2006

**NOTE: Please place survey form directly behind the Standard Application for Federal Assistance (SF 424) fact sheet.**

**Purpose:** This form is for applicants that are private nonprofit organizations (not including private universities). Please complete it to assist the federal government in ensuring that all qualified applicants, small or large, non-religious or faith-based, have an equal opportunity to compete for federal funding. Information provided on this form will not be considered in any way in making funding decisions and will not be included in the federal grants database.

1. Does the applicant have 501(c)(3) status?

   ☐ Yes ☐ No

2. How many full-time equivalent employees does the applicant have? *(Check only one box).*

   ☐ 3 or Fewer ☐ 15-50
   ☐ 4-5 ☐ 51-100
   ☐ 6-14 ☐ over 100

3. What is the size of the applicant's annual budget? *(Check only one box.)*

   ☐ Less Than $150,000
   ☐ $150,000 - $299,999
   ☐ $300,000 - $499,999
   ☐ $500,000 - $999,999
   ☐ $1,000,000 - $4,999,999
   ☐ $5,000,000 or more

4. Is the applicant a faith-based/religious organization?

   ☐ Yes ☐ No

5. Is the applicant a non-religious community-based organization?

   ☐ Yes ☐ No

6. Is the applicant an intermediary that will manage the grant on behalf of other organizations?

   ☐ Yes ☐ No

7. Has the applicant ever received a government grant or contract (Federal, State, or local )?

   ☐ Yes ☐ No

8. Is the applicant a local affiliate of a national organization?

   ☐ Yes ☐ No

## Survey Instructions on Ensuring Equal Opportunity for Applicants

1. 501(c)(3) status is a legal designation provided on application to the Internal Revenue Service by eligible organizations. Some grant programs may require nonprofit applicants to have 501(c)(3) status. Other grant programs do not.

2. For example, two part-time employees who each work half-time equal one full-time equivalent employee. If the applicant is a local affiliate of a national organization, the responses to survey questions 2 and 3 should reflect the staff and budget size of the local affiliate.

3. Annual budget means the amount of money your organization spends each year on all of its activities.

4. Self-identify.

5. An organization is considered a community-based organization if its headquarters/service location shares the same zip code as the clients you serve.

6. An "intermediary" is an organization that enables a group of small organizations to receive and manage government funds by administering the grant on their behalf.

7. Self-explanatory.

8. Self-explanatory

**Paperwork Burden Statement**

According to the Paperwork Reduction Act of 1995, no persons are required to respond to a collection of information unless such collection displays a valid OMB control number. The valid OMB control number for this information collection is **1225-0083**. The time required to complete this information collection is estimated to average five (5) minutes per response, including the time to review instructions, search existing data resources, gather the data needed, and complete and review the information collection. **If you have any comments concerning the accuracy of the time estimate(s) or suggestions for improving this form, please write to:** Departmental Clearance Officer, U.S. Department of Labor, 200 Constitution Avenue NW, Room N-1301, Washington, D.C. 20210. **If you have comments or concerns regarding the status of your individual submission of this form, write directly to:** Joyce I. Mays, Application Control Center, U.S. Department of Labor, 200 Constitution Avenue, NW, Washington, DC 20210.

# U.S. Department of Labor
# Veterans' Employment and Training Service

## GLOSSARY OF TERMS

**Adequate Employment** – See Unsubsidized Employment.

**Administrative Costs** - Administrative costs shall consist of all direct and indirect costs associated with the supervision and management of the program. These costs shall include the administrative costs, both direct and indirect, of sub-recipients and contractors. All indirect costs are considered administrative costs for HVRP/VWIP purposes, therefore, administrative costs including indirect costs shall not exceed 20% of the total grant award.

**Adult Basic Education** - Education for adults whose inability to speak, read, or write the English language or to effectively reason mathematically, constitutes a substantial impairment of their ability to get or retain employment commensurate with their real ability, which is designed to help eliminate such inability and raise the level, of education of such individuals with a view to making them less likely to become dependent on others, to improve their ability to benefit from occupational training and otherwise increase their opportunities for more productive and profitable employment, and to make them better able to meet their adult responsibilities.

**Ancillary Services** – Employment and training-related activities other than core training that may enhance a participant's employability.

**Apprenticeship Training** – A formal occupational training program that combines on-the-job training and related instruction and in which workers learn the practical and conceptual skills required for a skilled occupation, craft, or trade. It may be registered or unregistered.

**Assessment/Intake** - A process for screening individual applicants for program eligibility making the level of need determinations; making an initial determination what services or programs can best benefit the applicants; providing information about services, program eligibility, and the availability of those services, and the routing or selecting individual applicants for particular service delivery or program participation.

**Assisted Placements Into Unsubsidized Employment** - Assisted placements into unsubsidized employment should be recorded where the definition for placement with unsubsidized employment above is met, but the placement was arranged by an agency to which the homeless veteran was referred to. Grantees can report and take credit for one (1) assisted placement into unsubsidized employment per enrolled eligible participant. (Also see entered employment.)

**Average Hourly Wage At Placement -** The average hourly wage at placement is the average hourly wage rates at placement of all assisted placements plus direct placements.

**Assurance and Certifications -** The act of signifying intent to comply with applicable federal and State laws and regulations as a condition for receiving and expending USDOL grant funds.

**Barriers to Employment** - Characteristics that may hinder an individual's hiring promotion or participation in the labor force. Identification of these barriers will vary by location and labor market. Some examples of individuals who may face barriers to employment include: single parents, women, displaced homemakers, youth, public assistance recipients, older workers, substance abusers, teenage parents, certain veterans, ethnic minorities, and those with limited English speaking ability or a criminal record or with a lack of education, work experience, credential, child care arrangements, transportation or alternative working patterns.

**Campaign Badge veteran -** A veteran who served on active duty during a war (e.g., WWII), action (e.g., Korea, Vietnam, Desert Storm, Operation Enduring Freedom) or in a campaign or expedition for which a campaign badge or an expeditionary medal has been authorized (e.g. Haiti, Somalia, Bosnia and Grenada). A complete listing is available on the following web site maintained by the Office of Personnel Management (OPM): http://www.opm.gov/veterans/html/vgmedal2.asp

**Carry-Over Registrants** – is an unduplicated count of enrolled participants from a previous grant award period who were unemployed at the end of the grant expiration date and who continued to seek employment and supportive services from the grantee in the next grant award period. All services provided to carry-over registrants are to be recorded in the grant period that such services are received.

For example: the initial grant award period was from July 1st through June 30th, a participant was enrolled into the program but as of June 30th the participant was still unemployed, therefore, the participant (who is still seeking employment and supportive services from the grantee) will be carried over into the next grant award cycle beginning July 1st.

For example: a participant was enrolled into the program on May 23rd and was still unemployed and seeking grantee assistance as of July 1st, therefore, this participant is carried over into the next grant award period.

For example: a participant was enrolled into the program on February 20th and entered employment on June 1st, therefore, this participant does not carry over into the next grant award period.

**Note:** Carry-over registrants are added to the total number of enrolled participants and are to be included in all applicable performance statistics, targeted sub-groups, and calculations (i.e., cost per placement, placement into employment rate, number retaining employment for 90 and 180 days, average hourly wage at placement, etc.).

For example: 25 currently enrolled participants plus 10 carry-over participants from the previous grant award period equals 35 total enrolled participants.

- Out of the 35 enrolled participants, 27 were successful in gaining employment; therefore, the grantee achieved a 77% placement into employment rate (27 entered employments divided by 35 total enrolled participants equals 77%).

Appendix G

- Out of 35 enrolled participants, 27 were successful in gaining employment, and of those 27 who gained employment, 24 retained employment for 90 days, therefore, the grantee achieved a 89% 90-day retention in employment rate (24 retained employments divided by 27 total entered employments equals 89%).

**Case Management** - A client-centered approach in the delivery of intensive services, designed to prepare and coordinate comprehensive employment plans for participants, to assure access to the necessary training and supportive services, and to provide support during program participation and after job placement.

**Case Manager** - One who coordinates, facilitates or provides direct services to a client or trainee from application through placement, post placement follow-up, or other case closing, exclusively, through periodic contact and the provision of appropriate assistance.

**Classroom Training** – Any training of the type normally conducted in an institutional setting, including vocational education, which is designed to provide individuals with the technical skills and information required to perform a specific job or group of jobs. It may also include training designed to enhance the employability of individuals by upgrading basic skills, throughout the provision of courses such as remedial education, training in the primary language of persons with limited English language proficiency, or English as a second language training.

**Close Out** – Grant close out is the process by which the Federal grantor agency (in the case of VETS grants, Department of Labor) determines that all applicable administrative actions and all required work of the grant have been completed by the grantee and the grantor.

**Cognizant Federal Agency -** The federal agency that is assigned audit or indirect cost rate approval responsibility for a particular recipient organization by the Office of Management and Budget (OMB Circular A-87 and A-102 [20 CFR, Part 97]).

**Community Based Organization** – means a private non-profit organization that is representative of a community or a significant segment of a community and that has demonstrated expertise and effectiveness in the field of workforce investment. Faith-Based organizations are considered a subset.

**Compensated Work Therapy** (CWT) - is a Department of Veterans Affairs (DVA) sponsored program for veteran inpatients and outpatients provided for under 38 U.S.C. 1718(a). CWT incorporates a work regiment with monetary incentives. DVA reimbursements to participants who are in the program are related to their productive capabilities. Every effort is to be made to create a realistic work environment - earnings should be commensurate with wages paid in the community for essentially the same quality and quantity of work and that payments to the patient be prompt and at regular intervals. Although industrial business practices are utilized to simulate usual working conditions, **therapy is still the primary objective**. The Department of Labor, Veterans' Employment and Training Service encourages and supports the use and integration of CWT to benefit the Homeless Veterans' Reintegration Program (HVRP) and Veterans' Workforce Investment Program (VWIP) enrolled participants by improving their job readiness. For HVRP and VWIP purposes, CWT is considered a supportive service and is not to be considered a placement into unsubsidized employment.

Appendix G

**Cost Per Placement -** The cost per placement into unsubsidized employment is obtained by dividing the total HVRP/VWIP funds expended by the total number of enrolled participants placed into employment.

For example: As of the 2nd quarter, the grantee expended $150,000 and placed 50 enrolled participants into employment, therefore, the grantee cost per placement was $3,000 ($150,000 expended divided by 50 enrolled participants into employment equals $3,000 cost per placement).

For example: As of the 90 day final report, the grantee expended $300,000 and placed 100 enrolled participants into employment, therefore, the grantee cost per placement was $3,000 ($300,000 expended divided by 100 enrolled participants placed into employment equals $3,000 cost per placement).

**Counseling/Vocational Guidance** - A form of assistance which provides guidance in the development of a participant's vocational goals and the means to achieve those goals; and/or assist a participant with the solution to one or more individual problems that may pose a barrier(s) to sustained employment. The participant is achieving vocational goals, e.g. PTSD counseling substance abuse, counseling job training, etc.

**Counselor** - (Employment/Vocational): A trained and qualified professional authorized to provide direct assistance (beyond advising and informing) through planning, testing, training and otherwise readying an individual for sustained employment.

**Covered Veteran** – Any of the following; (1) disabled veterans; (2) veterans who served on active duty in the Armed Forces during a war or in a campaign or expedition for which a campaign badge has been authorized; (3) veterans who, while serving on active duty in the Armed Forces, participated in a United Stated military operation for which an Armed Forces service medal was awarded pursuant to Executive Order No. 12895; (4) Recently Separated Veterans.

**Customized Training** – A training program designed to meet the special requirements of an employer who has entered into an agreement with a Service Delivery Area to hire individuals who are trained to the employer's specifications. The training may occur at the employer's site or may be provided by a training vendor able to meet the employer's requirements. Such training usually requires a commitment from the employer to hire a specified number of trainees who satisfactorily complete the training.

**Department or agency** – Any agency of the Federal Government or the District of Columbia, including any Executive agency as defined in section 105 of title 5 and the United States Postal Rate Commission.

**Direct Placements Into Unsubsidized Employment** - A direct placement into unsubsidized employment must be a placement made directly by staff with an established employer who covers all employment costs for 20 or more hours per week at or above the federal minimum

wage. Day labor and other very short-term placements should not be recorded as placements into unsubsidized employment. Grantees can report and take credit for one (1) direct placement into unsubsidized employment per enrolled eligible participant. (Also see entered employment.)

**Disabled Veteran** - (1) A veteran who is entitled to compensation (or who but for the receipt of military retired pay would be entitled to compensation) under laws administered by the Secretary, or (2) A person who was discharged or released from active duty because of a service-connected disability.

**Disallowed Costs** – Disallowed costs are those charges to a grant that the grantor agency (or its representative) determines to be unallowable in accordance with the applicable Federal Cost Principles or other conditions in the grant.

**DVET** – Director of Veterans' Employment and Training

**DVOP** – (Disabled Veterans' Outreach Program) A program of Federal assistance through grants to States to staff full-time and half-time Disabled Veterans' Outreach Program Specialists as the State determines appropriate and efficient to carry out intensive services in accordance with 38 U.S.C. 4103A.

**Economically Disadvantaged** – An individual who (a) receives, or is a member of a family which receives, cash welfare payments under a Federal, state, or local welfare program; (b) has, or is a member of a family which has, received a total family income for the six-month period prior to application for the program involved (exclusive of unemployment compensation, child support payments, and welfare payments) which, in relation to family size, was not in excess of the higher of (i) the official poverty line (as defined by the Office of Management and Budget, and revised annually in accordance with section 673 (2) of the Omnibus Budget Reconciliation Act of 1981 (42 U.S.C. 9902(2)), or (ii) 70 percent of the lower living standard income level; (c) is receiving (or has been determined within the 6-month period prior to the application for program involved to be eligible to receive) food stamps pursuant to the Food Stamp Act of 1977; (d) qualifies as a homeless individual under section 103 of the Stewart B. McKinney Homeless Assistance Act; (e) is a foster child on behalf of whom state or local government payments are made; or (f) in cases permitted by regulations of the Secretary of Labor, is an individual with a disability whose income meets the requirements of clause (a) or (b), but who is a member of a family whose income does not meet such requirements.

**Eligible** - Meeting the minimum requisite qualifications to be considered for the provision of services or entry into a position under a funded program or as required by law.

**Employability Development Services** (EDS) - This includes services and activities that will develop or increase the employability of the participant. Generally, this includes vocational counseling, classroom and on-the-job training, pre-employment services (such as job seeking skills and job search workshops), temporary or trial employment, sheltered work environments and other related services and activities. Planned services should assist the participant in addressing specific barriers to employment and finding a job. These activities may be provided by the applicant or by a Sub-grantee, contractor or another source such as the local Workforce

Investment Act program or the DVOP personnel or LVERs. Such services are not mandatory but entries should reflect the services described in the application and the expected number of participants receiving or enrolled in such services during each quarter. Participants may be recorded more than once if they receive more than one service.

**Employment Development Plan** (EDP) – An individualized written plan or intervention strategy for serving an individual which, as a result of an assessment of the veteran's economic needs, vocational interests, aptitudes, work history, etc., defines a reasonable vocational or employment goal and the developmental services or steps required to reach the goal and which documents the accomplishments made by the individual.

**Employment Service** – the state level organization or public labor exchange system affiliated with the Department of Labor's United States Employment Service.

**Employment service delivery system** – A service delivery system at which or through which labor exchange services, including employment, training, and placement services are offered in accordance with the Wagner-Peyser Act.

**Enlistments** - Individuals who have expressed an interest, signed up for a workshop or enrollment in the program.

**Entered Employment** – Enrolled eligible participants who were placed in jobs or otherwise obtained employment as a result of grantee services used or received. Grantees are allowed to report and take credit for one (1) placement per enrolled eligible participant.

**Entered Employment Rate** – This is a method used to determine the percentage of participants who become employed during the grant award period. The percentage is calculated by dividing the total number of participants who were enrolled in the program (including carry-over participants from the previous grant award who were still unemployed at the end of the grant period) by the number of participants who were placed into jobs or otherwise obtained employment as a result of grantee services used or received (also see carry-over registrants).

**Enrolled Veteran** - Shall be synonymous with the term participant - A veteran who has been determined eligible for services at intake and who is receiving or scheduled to receive training services.

**ETA 9002** – Report reflects total services by Service Delivery Point (SDP) State Merit Staff.

**Faith-Based Organization** – see "community-based organization."

**Follow-up** - The tracking of clients for a period of time up to 180 days after initial placement into employment, last referral date for services, or completion of training programs to determine current status, outcome or whether to offer additional services (such as additional referral, job retention advisement, etc.).

**Full-Time Equivalent** (FTE) – a personnel charge to the grant equal to 2,080 hours per year.

**FY** - Fiscal Year. For federal government purpose, any twelve-month period beginning on October 1 and ending on September 30.

**General Equivalency Diploma** (GED) – A high school equivalency diploma that is obtained by passing the General Educational Diploma Equivalency Test that measures the application of skills and knowledge generally associated with four (4) years of traditional high school instruction.

**Grant Officer's Technical Representative** (GOTR) - An individual (usually the DVET) serving on behalf of the Grant Officer who maintains and ensures the integrity of the approved grant agreement by reviewing and making recommendations regarding technical matters not involving a change in scope, cost, or conditions.

**Homeless or homeless individual** – includes persons who lack a fixed, regular, and adequate nighttime residence. It also includes persons whose primary nighttime residence is either a supervised public or private shelter designed to provide temporary living accommodations; an institution that provides a temporary residence for individuals intended to be institutionalized; or a private place not designed for, or ordinarily used as, a regular sleeping accommodation for human beings. [Reference 42 U.S.C., Section 11302 (a)].

**Indirect cost** - A cost that is incurred for a common or joint purpose benefiting more than one cost objective and that is not readily assignable to the cost objective specifically benefited. All indirect costs are considered administrative costs for HVRP/VWIP purposes, therefore, administrative costs including indirect costs shall not exceed 20% of the total grant award.

**In-kind Services** – Property or services which benefit a federally-assisted project or program and which are contributed without charge to the grantee.

**Institutional Skills Training** – training conducted in an institutional setting and designed to ensure that individuals acquire the skills, knowledge, and abilities necessary to perform a job or group of jobs in an occupation for which there is a demand.

**Intake** – A process for screening individual applicants for program eligibility or making level of need determinations; making an initial determination of what services or program can best benefit the applicants; providing information about services, program eligibility, and the availability of those services, and the routing or selecting of individual applicants for particular service delivery or program participation.

**Intensive Services** - The provision of concentrated staff services to clients who indicate the need for facilitation or interventions to secure lasting employment. The case management approach to service delivery is a viable model for successfully providing such services and obtaining the clients goals.

**Job Club Workshop/Activities** – A form of job search assistance provided in a group setting. Usually job clubs provide instruction and assistance in completing job applications and

developing resumes and focus on maximizing employment opportunities in the labor market and developing job leads. Many job clubs use telephone banks and provide group support to participants before and after they interview for job openings.

**Job Development** - The process of marketing a program participant to employers, including informing employers about what the participant can do and soliciting a job interview for that individual with the employer (targeted job development); and the development of one or more job openings or training opportunities with one or more employers using a variety of techniques and means of contact.

**Job Placement Services** – Job placement services are geared towards placing participants in jobs and may involve activities such as job search assistance, training, or job development. These services are initiated to enhance and expedite participants' transition from training to employment.

**Job Search Assistance** - An activity, which focuses on building practical skills and knowledge to identify and initiate employer contact and conduct successful interview with employers. Various approaches may be used to include participation in a job club, receive instruction in identifying personal strengths and goals, resume application preparation, learn interview techniques, and receive labor market information. Job search assistance is often self-service activity in which individuals obtain information about specific job openings or general jobs or occupational information.

**Labor Exchange -** Refers to the services provided to job seekers and employers by the State Employment Services Agencies, or other designated entities. Preparatory services to job seekers may include assessment, testing, counseling, provision of labor market information, targeted job development, resulting in job referral and follow-up with former applicants and prospective employers. Employer-oriented services may include accepting job orders, screening applicants, referring qualified applicants and providing follow-up to foster job retention and develop additional job openings or training opportunities.

**Labor Exchange Delivery System** (LEDS) - Describes the system of matching jobs and training opportunities with applicants operating with Federal employment and job training funds.

**Labor Force -** The sum of all civilians classified as employed and unemployed and members of the Armed Forces stationed in the United States. [Bureau of Labor Statistics Bulletin 2175].

**Labor Market Area** – an economically-integrated geographic area within which individuals can reside and find employment within a reasonable distance or can readily change employment without changing their place of residence.

**Life Skills/Money Management Training** - Activities and guidance provided to enrolled participants regarding the building of life skills including personal financial management, work ethics, development of supportive social networks, meal planning and preparation, personal hygiene and grooming, etc.

**Literacy and Bilingual Training** – See Adult Basic Education.

**LVER** (Local Veterans' Employment Representative Program) - A program of Federal assistance through grants to States to staff and support an allocated position level, appointed full-time or assigned half-time in accordance with 38 U.S.C. 4104 to perform a number of duties, to include: outreach to employers; conducting seminars; conducting job search workshops and job search groups; and facilitating employment, training, and placement services.

**Minimum Economic Need** – the level of wages paid to a program participant that will enable that participant to become economically self-sufficient.

**Minority Veterans** – for the purposes of the HVRP and VWIP programs, veterans who are Workforce Investment Act (WIA) eligible and are members of the following ethnic categories: African American, Hispanic, American Indian or Alaskan Native, Asian or Pacific Islander.

**National Veterans' Training Institute** (NVTI) - An agency contracted with USDOL/VETS to further develop and enhance the professional skills of veterans' employment and training service providers throughout the United States.

**Newly Separated Veteran** – A veteran who has been released from active duty within the last 36 months.

**Number Referred to VA for Benefits** – an unduplicated count of the number of enrolled participants who were referred to the Department of Veterans Affairs for services and benefit claims.

**Number Retaining Job for 90 Days** -To be counted as retaining a job for 90 days, continuous employment with one or more employers for at least 90 days must be verified and the definition for either direct placement or assisted placement into unsubsidized employment above is met. This allows clients who have moved into a position with a different employer to be recorded as retaining the job for 90 days as long as the client has been steadily employed for that length of time.

**Number Retaining Job For 180 Days** - To be counted as retaining a job for 180 days, continuous employment with one or more employers for at least 180 days must be verified, and the definition for either placement or assisted placement into unsubsidized employment above is met. This allows clients who have moved into a position with a different employer to be recorded as retaining the job for 180 days as long as the client has been steadily employed for that length of time.

**Occupational Skills Training** – Includes both (1) vocational education which is designed to provide individuals with the technical skills and information required to perform a specific job or group of jobs, and (2) on-the-job training.

**Offender** – Any adult or juvenile who has been subject to any stage of the criminal justice process for whom services under this program may be beneficial or who requires assistance in overcoming artificial barriers to employment resulting from a record of arrest or conviction.

**On-the-Job Training** (OJT) – means training by an employer that is provided to a paid participant while engaged in productive work in a job that: (a) provides knowledge or skill essential to the full and adequate performance of the job; (b) provides reimbursement to the employer of up to 50 percent of the wage rate of the participant, for the extraordinary costs of providing the training and additional supervision related to the participant is being trained, taking into account the content of the training, the prior work experience of the participant, and the service strategy of the participant, as appropriate. Usually in the OJT agreement, there is a promise on the part of the employer to hire the trainee upon successful completion of the training.

**On-Site Industry-Specific Training** – This is training which is specifically tailored to the needs of a particular employer and/or industry. Participants may be trained according to specifications developed by an employer for an occupation or group of occupations at a job site. Such training is usually presented to a group of participants in an environment or job site representative of the actual job/occupation, and there is often an obligation on the part of the employer to hire a certain number of participants who successfully complete the training.

**One-Stop/One Stop Service Delivery Point (SDP)** - A location that connects employment, education, and training services into a coherent network of resources at the local, state, and national level.

**Order of Precedence** – In the event of any inconsistency between any provisions of the HVRP/VWIP grants, the following order of precedence shall apply: 1) Special Provisions; 2) General Provisions; 3) Applicable Solicitation for Grant Applications; and 4) Grantee's Application for Federal Assistance.

**Outreach** - An active effort by program staff to encourage individuals in the designated service delivery area to avail themselves of program services.

**Outside Funds –** Resources pledged to the grant program that have a quantified dollar value. Such resources may include training funds from programs such as WIA Title I that are put aside for the exclusive use by participants enrolled in a program. Outside funds do not include in-kind services.

**Participant** – means an individual who has been determined to be eligible to participate in and who is receiving services (except follow-up services) under the program. Participation shall be deemed to commence on the first day, following determination of eligibility, on which the individual began receiving subsidized employment, training, or other services provided under the program. An individual who receives only outreach and/or intake assessment services does not meet this definition.

**Participants Enrolled** - A participant should be recorded as having been enrolled when an intake form has been completed, and services, referral, and/or employment has been received through the program. This will be an unduplicated count over the performance period, i.e., each participant is recorded only once, regardless of the number of times she or he receives assistance.

**Participants Services** - This cost includes supportive, training, or social rehabilitation services, which will assist in stabilizing the participant. This category should reflect all costs other than administrative.

**Placed Into Transitional Or Permanent Housing** - A placement into transitional or permanent housing should be recorded when a veteran served by the program upgrades his/her housing situation during the reporting period from shelter/streets to transitional housing or permanent housing or from transitional housing to permanent housing. Placements resulting from referrals by staff shall be counted. This item is however an unduplicated count over the year, except that a participant may be counted once upon entering transitional housing and again upon obtaining permanent housing.

**Placement into Employment** – the act of securing unsubsidized employment for or by a participant (also see entered employment). Grantees are allowed to report and take credit for one (1) placement (or entered employment) per enrolled eligible participant.

**Placement Rate -** This is a method used to determine the percentage of participants who become employed. The figure is calculated by dividing the number of total participants who were registered for services and enrolled in the program by the number of applicants or program participants who were placed into employment or otherwise entered employment.

**Pre-apprenticeship Training** – Any training designed to increase or upgrade specific academic, or cognitive, or physical skills required as a prerequisite for entry into a specific trade or occupation.

**Pre-enrollment Assessment** – The process of determining the employability and training needs of individuals before enrolling them into the program. Individual factors usually addressed during pre-enrollment assessment include: an evaluation and/or measurement of vocational interests and aptitudes, present abilities, previous education and work experience, income requirements, and personal circumstances.

**Preference** - The application of priorities in the consideration and selection through appointment or assignment of staff to funded positions, or in the provision of direct services and order of referral to listed openings in the order designated by statute regulation, and grant agreement.

**Priority of Service** – With respect to any qualified job-training program funded by the Department of Labor, that a covered person shall be given priority over a non-veteran for the receipt of employment, training, and placement services provided under that program, not withstanding any other provision of law.

**Program Resources** – Includes the total of both program or grant and outside funds.

Appendix G

**Program Year** (PY) - The 12-month period beginning July 1 in the fiscal year for which the appropriation is made, and ending on the following June 30.

**Qualified (for employment)** - Having the ability to perform the essential functions of the position with or without reasonable accommodation for an individual with a disability.

**Qualified (for job training program)** – Any workforce preparation, development, or delivery program or service that is directly funded, in whole or in part, by the Department of Labor.

**Rate of Placement Into Unsubsidized Employment** - The rate of placement into unsubsidized employment is obtained by dividing the number placed into unsubsidized employment, plus the number of assisted placements into unsubsidized employment by the number of clients enrolled.

**Recently Separated Veteran** - Refers to an individual who applies for program participation or assistance within 48 months of separation from active U.S. military service [29 U.S.C. 1503 (27) (c)].

**Remedial Education** – Education instruction, particularly in basic skills, to raise an individual's general competency level in order to succeed in vocational education or skill training programs or employment.

**Service Connected Disabled** - A veteran with a service-connected disability rated by the Department of Veterans Affairs at any level (0% to 100%).

**Service Delivery Point (SDP)** - Includes offices of the public employment delivery system operated directly or by contract with the State Workforce Agency as grantee within a State and may include One–Stop Career Centers, local employment service offices, and any satellite or itinerant offices at which labor exchange services are available.

**Solicitation for Grant Applications (SGA)** - A document which provides the requirements and instructions for the submission by eligible applicants identified in the document's text of requests for Federal domestic assistance (funds) for one or more programs or grants-in-aid.

**Special Disabled Veteran** - (1) A veteran who is entitled to compensation (or who but for the receipt of military retired pay would be entitled to compensation) under laws administered by the Secretary for a disability rated at (a) 30 percent or more, or (b) 10–or 20 percent in the case of a veteran who has been determined under section 3106 of this title to have a serious employment handicap; or (2) a person who was discharged or released from active duty because of a service-connected disability.

**Stand Down** – is an event held in a local community where a variety of social services are provided to homeless veterans. Stand Down organizers partner with local businesses and social service providers such as the State Workforce Agency including the Disabled Veterans' Outreach Program (DVOP) and Local Veterans' Employment Representative (LVER) staff,

Department of Veterans' Affairs, Department of Health and Human Services, Federal Emergency Management Agency (emergency food and shelter grants), Veteran Service Organizations, and local non-profit organizations including faith-based and community-based organizations. The Director for Veterans' Employment and Training Service (DVET) is a vital link to determining the needs of veterans within his/her respective State. VETS encourages and supports local Stand Down Events and may award up to $8,000 per event per year. The DVET is the primary point of contact for all Stand Down inquiries.

**State** – Each of several States of the United States, the District of Columbia, the Commonwealth of Puerto Rico, Guam, American Samoa, the Virgin Islands, the Commonwealth of the Northern Marianas Islands, and the Trust Territory of the Pacific Islands.

**State Workforce Agency (SWA)** - The State level organization, as affiliated with the former United States Employment Service.

**Subgrant** – An award of financial assistance in the form of money, or property in lieu of money, made under a grant by a grantee to an eligible subgrantee.

**Subgrantee** – The government or other legal entity to which a subgrant is awarded and which is accountable to the grantee for the use of the funds provided.

**Suitable Employment** – See "Unsubsidized Employment."

**Substance Abuser** – An individual dependent on alcohol or drugs, especially narcotics, whose dependency constitutes or results in a substantial barrier to employment.

**Supportive Services** – means services which are necessary to enable an individual eligible for training, but who cannot afford to pay for such services, to participate in a training program funded under the grant. Such supportive services may include transportation, health care, financial assistance (except as a post-termination service), drug and alcohol abuse counseling and referral, individual and family counseling, special services and materials for individuals with disabilities, job coaches, child care and dependent care, temporary shelter, financial counseling, and other reasonable expenses required for participation in the training program and may be provided in-kind or through cash assistance.

**Targeted Job Development** - The identification and marketing of a group of qualified applicants with similar occupations or employment barriers requiring personal visitation/phone contact with those employers likely to employ these individuals.

**Total Planned Expenditures -** Identified forecasted financial needs to accomplish programmatic objectives broken down into fiscal quarters.

**Unpaid Work Experience** – when an enrolled participant performs specific duties on a voluntary basis (does not receive any financial compensation) and gains specific work experience and/or skills.

Appendix G

**Unsubsidized Employment –** Employment not financed from funds provided under the grant. In the grant program the term "adequate" or "suitable" employment is also used to mean placement in unsubsidized employment which pays an income adequate to accommodate the participants' minimum economic needs.

**Upgrading or Retraining** – Training given to an individual who needs such training to advance above an entry-level or dead-end position. This training shall include assisting enrolled eligible veterans in acquiring needed state certification to be employed in the same field as they were trained in the military (i.e., Commercial Truck Driving License (CDL), Emergency Medical Technician (EMT), Airframe & Power Plant (A&P), Teaching Certificate, etc.).

**Veteran for HVRP and VWIP Purposes –** the term "veteran" means a person who served in the United States active military, naval, or air service, and who was discharged or released there from under conditions other than dishonorable [38 U.S.C 101 (2)].

**Veterans' Workforce Investment Program (VWIP)** – Competitively awarded employment and training grants to meet the needs of veterans with significant barriers to employment, with service-connected disabilities, who served on active duty in the armed forces during a campaign or expedition for which a campaign badge has been authorized, and recently separated veterans. The U.S. Department of Labor's, Veterans' Employment and Training Service awards VWIP grants as authorized under the Workforce Investment Act (WIA), Section 168.

**Vocational Exploration Training** – Through assessments such as interest inventories and/or counseling, a process of identifying occupations or occupational areas in which a person may find satisfaction and potential, and for which his or her aptitudes and other qualifications may be appropriate.

**Vocational Guidance** - The provision of information, suggestions, and advice through discussion with individuals who are considering a geographical or vocational choice or change, relating to their career decision.

**Wartime Veteran** - See "campaign veteran above."

**Welfare and/or Public Assistance recipient** – An individual who, during the course of the program year, receives or is a member of a family who receives cash welfare or public assistance payments under a Federal, state, or local welfare program.

**Workforce Investment Act** (WIA) – The purpose of this Act is to establish programs to prepare youth and unskilled adults for entry into the labor force and to afford job training to those economically disadvantaged individuals and other individuals, including veterans, who face serious barriers to employment and who are in need of such training to obtain prospective employment. The Act requires the Assistant Secretary for Veterans' Employment and Training to consult with the Secretary of the Department of Veterans Affairs to ensure that programs funded under VWIP of this Act meet the employment and training needs of service-connected disabled, campaign, and recently separated veterans and are coordinated, to the maximum extent feasible, with related programs and activities.

Appendix G

**Work Experience** – A temporary activity (six months or less) which provides an individual with the opportunity to acquire the skills and knowledge necessary to perform a job, including appropriate work habits and behaviors, and which may be combined with classroom or other training. When wages are paid to a participant on work experience and when such wages are wholly paid for under WIA, the participant may not receive this training under a private, for profit employer.

**Youth** – An individual between 20 and 24 years of age.

Revised: 3/9/05 - km

USDOL/VETS

## LIST OF COMMON ACRONYMS

| | |
|---|---|
| ADVET | Assistant Director for Veterans' Employment and Training |
| ASVET | Assistant Secretary (of Labor) for Veterans' Employment and Training |
| CAP | Corrective Action Plan |
| CFR | Code of Federal Regulations |
| CWT | Compensated Work Therapy |
| DOD | Department of Defense |
| DV | Disabled Veteran |
| DVA | Department of Veterans Affairs (see also VA) |
| DVET | Director for Veterans' Employment and Training Service |
| DVOP | Disabled Veterans' Outreach Program |
| DTAP | Disabled Veterans' Transition Assistance Program |
| EDP | Employment Development Plan |
| ES | Employment Service |
| ETA | Employment and Training Administration |
| FARS | Financial Accounting and Reporting System |
| FCJL | Federal Contractor Job Listing |
| FCP | Federal Contracting Program |
| FEMA | Federal Emergency Management Administration |
| FY | Fiscal Year |
| GOTR | Grant Officer's Technical Representative |
| GPRA | Government Performance and Results Act of 1994 |
| HHS | Department of Health and Human Services |
| HHS/PMS | Health and Human Services/Payment Management System |
| HUD | Department of Housing and Urban Development |
| HVCAA | Homeless Veterans' Comprehensive Assistance Act - Title 38 USC, Section 2001 |
| HVRP | Homeless Veterans' Reintegration Program |
| IEP | Individual Employment Plan |
| ISS | Individual Support System |
| IV-TP | Incarcerated Veterans' Transition Program |
| LEDS | Labor Exchange Delivery System |
| LESO | Local Employment Service Office |
| LMI | Labor Market Information |
| LVER | Local Veterans' Employment Representative |
| MHAA | McKinney-Vento Homeless Assistance Act - Title 42 USC, Section 11302(a) |
| MOU | Memorandum of Understanding |
| NOGA | Notice of Grant Award |
| NVTI | National Veterans' Training Institute |
| OASAM | Office of the Assistant Secretary for Administration and Management |
| OASVET | Office of the Assistant Secretary (of Labor) for Veterans' Employment and Training |
| OCD | Office of Cost Determination |
| OMB | Office of Management and Budget |
| OPM | Office of Personnel Management |
| OJT | On-the-Job-Training |
| PAC | Post Award Conference |
| PB | Personnel Benefits |
| PL | Public Law |
| PS | Personal Services |

| | |
|---|---|
| PY | Program Year |
| RAVET | Regional Administrator for Veterans' Employment and Training |
| SDP | Service Delivery Point |
| SDV | Special Disabled Veteran |
| SF | Standard Form |
| SGA | Solicitation For Grant Applications |
| SSA | Social Security Administration |
| SWA | State Workforce Agency |
| TAP | Transition Assistance Program |
| TEGL | Technical E Guidance Letter |
| UCX | Unemployment Compensation (Insurance) for ex-service members |
| UI | Unemployment Insurance |
| USC | United States Code |
| USDOL | United States Department of Labor |
| VA | Department of Veterans Affairs |
| VARO | Veterans' Administration Regional Office |
| VAMC | Veterans' Administration Medical Center |
| VETS | Veterans' Employment and Training Service |
| VEV | Vietnam-Era Veteran |
| VOE | Veterans and Other Eligible Persons |
| VPL | Veterans Program Letter |
| VR&E | Vocational Rehabilitation and Employment (formerly VR&C) |
| VSO | Veteran Service Organization |
| VWIP | Veterans' Workforce Investment Program (WIA, Section 168) |
| WIA | Workforce Investment Act of 1998 |
| WIB | Workforce Investment Board |

Appendix H

| Rank | Area Name | Census Population | |
|---|---|---|---|
| | | April 1, 2000 | April 1, 1990 |
| 1 | New York--Northern New Jersey--Long Island, NY--NJ--CT--PA CMSA | 21,199,865 | 19,549,649 |
| 2 | Los Angeles--Riverside--Orange County, CA CMSA | 16,373,645 | 14,531,529 |
| 3 | Chicago--Gary--Kenosha, IL--IN--WI CMSA | 9,157,540 | 8,239,820 |
| 4 | Washington--Baltimore, DC--MD--VA--WV CMSA | 7,608,070 | 6,727,050 |
| 5 | San Francisco--Oakland--San Jose, CA CMSA | 7,039,362 | 6,253,311 |
| 6 | Philadelphia--Wilmington--Atlantic City, PA--NJ--DE--MD CMSA | 6,188,463 | 5,892,937 |
| 7 | Boston--Worcester--Lawrence, MA--NH--ME--CT CMSA | 5,819,100 | 5,455,403 |
| 8 | Detroit--Ann Arbor--Flint, MI CMSA | 5,456,428 | 5,187,171 |
| 9 | Dallas--Fort Worth, TX CMSA | 5,221,801 | 4,037,282 |
| 10 | Houston--Galveston--Brazoria, TX CMSA | 4,669,571 | 3,731,131 |
| 11 | Atlanta, GA MSA | 4,112,198 | 2,959,950 |
| 12 | Miami--Fort Lauderdale, FL CMSA | 3,876,380 | 3,192,582 |
| 13 | Seattle--Tacoma--Bremerton, WA CMSA | 3,554,760 | 2,970,328 |
| 14 | Phoenix--Mesa, AZ MSA | 3,251,876 | 2,238,480 |
| 15 | Minneapolis--St. Paul, MN--WI MSA | 2,968,806 | 2,538,834 |
| 16 | Cleveland--Akron, OH CMSA | 2,945,831 | 2,859,644 |
| 17 | San Diego, CA MSA | 2,813,833 | 2,498,016 |
| 18 | St. Louis, MO--IL MSA | 2,603,607 | 2,492,525 |
| 19 | Denver--Boulder--Greeley, CO CMSA | 2,581,506 | 1,980,140 |
| 20 | San Juan--Caguas--Arecibo, PR CMSA | 2,450,292 | 2,270,808 |
| 21 | Tampa--St. Petersburg--Clearwater, FL MSA | 2,395,997 | 2,067,959 |
| 22 | Pittsburgh, PA MSA | 2,358,695 | 2,394,811 |
| 23 | Portland--Salem, OR--WA CMSA | 2,265,223 | 1,793,476 |
| 24 | Cincinnati--Hamilton, OH--KY--IN CMSA | 1,979,202 | 1,817,571 |
| 25 | Sacramento--Yolo, CA CMSA | 1,796,857 | 1,481,102 |
| 26 | Kansas City, MO--KS MSA | 1,776,062 | 1,582,875 |
| 27 | Milwaukee--Racine, WI CMSA | 1,689,572 | 1,607,183 |
| 28 | Orlando, FL MSA | 1,644,561 | 1,224,852 |
| 29 | Indianapolis, IN MSA | 1,607,486 | 1,380,491 |
| 30 | San Antonio, TX MSA | 1,592,383 | 1,324,749 |
| 31 | Norfolk--Virginia Beach--Newport News, VA--NC MSA | 1,569,541 | 1,443,244 |
| 32 | Las Vegas, NV--AZ MSA | 1,563,282 | 852,737 |
| 33 | Columbus, OH MSA | 1,540,157 | 1,345,450 |
| 34 | Charlotte--Gastonia--Rock Hill, NC--SC MSA | 1,499,293 | 1,162,093 |
| 35 | New Orleans, LA MSA | 1,337,726 | 1,285,270 |
| 36 | Salt Lake City--Ogden, UT MSA | 1,333,914 | 1,072,227 |
| 37 | Greensboro--Winston-Salem--High Point, NC MSA | 1,251,509 | 1,050,304 |
| 38 | Austin--San Marcos, TX MSA | 1,249,763 | 846,227 |
| 39 | Nashville, TN MSA | 1,231,311 | 985,026 |
| 40 | Providence--Fall River--Warwick, RI--MA MSA | 1,188,613 | 1,134,350 |
| 41 | Raleigh--Durham--Chapel Hill, NC MSA | 1,187,941 | 855,545 |
| 42 | Hartford, CT MSA | 1,183,110 | 1,157,585 |
| 43 | Buffalo--Niagara Falls, NY MSA | 1,170,111 | 1,189,288 |
| 44 | Memphis, TN--AR--MS MSA | 1,135,614 | 1,007,306 |
| 45 | West Palm Beach--Boca Raton, FL MSA | 1,131,184 | 863,518 |
| 46 | Jacksonville, FL MSA | 1,100,491 | 906,727 |
| 47 | Rochester, NY MSA | 1,098,201 | 1,062,470 |
| 48 | Grand Rapids--Muskegon--Holland, MI MSA | 1,088,514 | 937,891 |

| | | | |
|---|---|---|---|
| 49 | Oklahoma City, OK MSA | 1,083,346 | 958,839 |
| 50 | Louisville, KY--IN MSA | 1,025,598 | 948,829 |
| 51 | Richmond--Petersburg, VA MSA | 996,512 | 865,640 |
| 52 | Greenville--Spartanburg--Anderson, SC MSA | 962,441 | 830,563 |
| 53 | Dayton--Springfield, OH MSA | 950,558 | 951,270 |
| 54 | Fresno, CA MSA | 922,516 | 755,580 |
| 55 | Birmingham, AL MSA | 921,106 | 840,140 |
| 56 | Honolulu, HI MSA | 876,156 | 836,231 |
| 57 | Albany--Schenectady--Troy, NY MSA | 875,583 | 861,424 |
| 58 | Tucson, AZ MSA | 843,746 | 666,880 |
| 59 | Tulsa, OK MSA | 803,235 | 708,954 |
| 60 | Syracuse, NY MSA | 732,117 | 742,177 |
| 61 | Omaha, NE--IA MSA | 716,998 | 639,580 |
| 62 | Albuquerque, NM MSA | 712,738 | 589,131 |
| 63 | Knoxville, TN MSA | 687,249 | 585,960 |
| 64 | El Paso, TX MSA | 679,622 | 591,610 |
| 65 | Bakersfield, CA MSA | 661,645 | 543,477 |
| 66 | Allentown--Bethlehem--Easton, PA MSA | 637,958 | 595,081 |
| 67 | Harrisburg--Lebanon--Carlisle, PA MSA | 629,401 | 587,986 |
| 68 | Scranton--Wilkes-Barre--Hazleton, PA MSA | 624,776 | 638,466 |
| 69 | Toledo, OH MSA | 618,203 | 614,128 |
| 70 | Baton Rouge, LA MSA | 602,894 | 528,264 |
| 71 | Youngstown--Warren, OH MSA | 594,746 | 600,895 |
| 72 | Springfield, MA MSA | 591,932 | 587,884 |
| 73 | Sarasota--Bradenton, FL MSA | 589,959 | 489,483 |
| 74 | Little Rock--North Little Rock, AR MSA | 583,845 | 513,117 |
| 75 | McAllen--Edinburg--Mission, TX MSA | 569,463 | 383,545 |

BILLING CODE 4510–74–C

Signed at Washington, DC this 23rd day of March, 2005.

**Lisa Harvey,**

*Acting Grant Officer.*

**Appendices**

Appendix A: Application for Federal Assistance SF–424
Appendix B: Budget Information Sheet SF–424A
Appendix C: Assurances and Certifications Signature Page
Appendix D: Recommended Format for Planned Quarterly Technical Performance Goals
Appendix E: Direct Cost Descriptions for Applicants and Sub-Applicants
Appendix F: Survey on Ensuring Equal Opportunity for Applicants
Appendix G: The Glossary of Terms
Appendix H: List of Common Acronyms
Appendix I: List of 75 Largest Cities Nationwide

[FR Doc. 05–6132 Filed 3–20–05; 8:45 am]

BILLING CODE 4510–79–P

## MORRIS K. UDALL SCHOLARSHIP AND EXCELLENCE IN NATIONAL ENVIRONMENTAL POLICY FOUNDATION

### Sunshine Act Meetings

**TIME AND DATE:** 9 a.m. to 12 p.m., Friday, April 22, 2005.

**PLACE:** The offices of the Morris K. Udall Scholarship and Excellence in National Environmental Policy Foundation, 130 South Scott Avenue, Tucson, AZ 85701.

**STATUS:** This meeting will be open to the public, unless it is necessary for the Board to consider items in executive session.

**MATTERS TO BE CONSIDERED:** (1) A report on the U.S. Institute for Environmental Conflict Resolution: (2) a report from the Udall Center for Studies in Public Policy; (3) a report on the Native Nations Institute; (4) Program Reports; and (5) a Report from the Management Committee.

**PORTIONS OPEN TO THE PUBLIC:** All sessions with the exception of the session listed below.

**PORTIONS CLOSED TO THE PUBLIC:** Executive sessions.

**CONTACT PERSON FOR MORE INFORMATION:** Christopher L. Helms, Executive Director, 130 South Scott Avenue, Tucson, AZ 85701, (520) 670–5529.

Dated: March 24, 2005.

**Christopher L. Helms,**

*Executive Director, Morris K. Udall Scholarship and Excellence in National Environmental Policy Foundation, and Federal Register Liaison Officer.*

[FR Doc. 05–6245 Filed 3–25–05; 11:14 am]

BILLING CODE 6820–FN–M

## NATIONAL AERONAUTICS AND SPACE ADMINISTRATION

**[Notice (05–062)]**

### NASA Advisory Council (NAC), Aeronautics Research Advisory Committee; Meeting

**AGENCY:** National Aeronautics and Space Administration (NASA).

**ACTION:** Notice of meeting change.

**SUMMARY:** In accordance with the Federal Advisory Committee Act, Pub. L. 92–463, as amended, the National Aeronautics and Space Administration announces a change of date for the meeting of the NASA Advisory Council, Aeronautics Research Advisory

Committee (ARAC); Notice Number 05–035, March 7, 2005.

*Previously Announced Dates and Addresses of Meeting:* Wednesday, March 23, 2005, 8:30 a.m. to 5:15 p.m.; National Aeronautics and Space Administration, 300 E Street, SW., Room 6H46, Washington, DC 20546.

*Changes in the Meeting:* Date changed to May 3, 2005, 8:30 a.m. to 5:15 p.m.

**FOR FURTHER INFORMATION CONTACT:** Ms. Mary-Ellen McGrath, National Aeronautics and Space Administration, Washington, DC, (202) 358–4729.

**P. Diane Rausch,**

*Advisory Committee Management Officer, National Aeronautics and Space Administration.*

[FR Doc. 05–6064 Filed 3–28–05; 8:45 am]

**BILLING CODE 7510–13–P**

## NATIONAL CREDIT UNION ADMINISTRATION

### Agency Information Collection Activities: Submission to OMB for Extension of a Currently Approved Collection; Comment Request

**AGENCY:** National Credit Union Administration (NCUA).

**ACTION:** Request for comment.

**SUMMARY:** The NCUA is submitting the following information collection to the Office of Management and Budget (OMB) for review and clearance under the Paperwork Reduction Act of 1995 (Pub. L. 104–13, 44 U.S.C. Chapter 35). This information collection is published to obtain comments from the public.

**DATES:** Comments will be accepted until April 28, 2005.

**ADDRESSES:** Interested parties are invited to submit written comments to the NCUA Clearance Officer listed below:

Clearance Officer: Mr. Neil McNamara, National Credit Union Administration, 1775 Duke Street, Alexandria, VA 22314–3428, Fax no. 703–518–6669, e-mail: *mcnamara@ncua. gov.*

**FOR FURTHER INFORMATION CONTACT:** Requests for additional information or a copy of the information collection request, should be directed to Tracy Sumpter at the National Credit Union Administration, 1775 Duke Street, Alexandria, VA 22314–3428, or at (703) 518–6444.

**SUPPLEMENTARY INFORMATION:** Proposal for the following collection of information:

*Title:* HMDA Requirements under 12 U.S.C. 2801–2810 and Regulation C 12 CFR 203.

*OMB Number:* 3133–0166.

*Form Number:* None.

*Type of Review:* Extension of a currently approved collection.

*Description:* The collection of this data is required under the Home Mortgage Disclosure Act. The data collection is intended to provide the public with loan data that can be used (1) to help determine whether financial institutions are serving the housing needs of their communities; (Reg C 203.1(b)(1)(ii), (2) to assist public officials in distributing public-sector investments so as to attract private investment to areas where it is needed; Reg CC 203.1(b)(1)(iii), and (3) to assist in identifying possible discriminatory lending patterns and enforcing anti-discrimination statutes. Reg C 203.1(b)(2).

*Respondents:* Credit unions.

*Estimated No. of Respondents/ Recordkeepers:* 1,996.

*Estimated Burden Hours Per Response:* 41.46 hours.

*Frequency of Response:* Record-keeping, third party disclosure and reporting annually.

*Estimated Total Annual Burden Hours:* 82,765 hours.

*Estimated Total Annual Cost:* 0.

By the National Credit Union Administration Board on March 23, 2005.

**Mary Rupp,**

*Secretary of the Board.*

[FR Doc. 05–6153 Filed 3–28–05; 8:45 am]

**BILLING CODE 7535–01–M**

## NATIONAL CREDIT UNION ADMINISTRATION

### Agency Information Collection Activities: Submission to OMB for Extension of a Currently Approved Collection; Comment Request

**AGENCY:** National Credit Union Administration (NCUA).

**ACTION:** Request for comment.

**SUMMARY:** The NCUA is submitting the following information collection to the Office of Management and Budget (OMB) for review and clearance under the Paperwork Reduction Act of 1995 (Pub. L. 104–13, 44 U.S.C. Chapter 35). This information collection is published to obtain comments from the public.

**DATES:** Comments will be accepted until April 28, 2005.

**ADDRESSES:** Interested parties are invited to submit written comments to the NCUA Clearance Officer listed below:

Clearance Officer: Mr. Neil McNamara, National Credit Union Administration, 1775 Duke Street, Alexandria, VA 22314–3428, Fax No. 703–518–6669, E-mail: *mcnamara@ncua.gov.*

**FOR FURTHER INFORMATION CONTACT:** Requests for additional information or a copy of the information collection request, should be directed to Tracy Sumpter at the National Credit Union Administration, 1775 Duke Street, Alexandria, VA 22314–3428, or at (703) 518–6444.

**SUPPLEMENTARY INFORMATION:** Proposal for the following collection of information:

*Title:* 12 U.S.C. 1771—Conversion from Federal to State Credit Union and from State to Federal Credit Union and 12 U.S.C. 1781—Insurance of Member Accounts—Eligibility.

*OMB Number:* 3133–0116.

*Form Number:* NCUA 9600, NCUA 4401, NCUA 4221, NCUA 4505, & NCUA 4506.

*Type of Review:* Extension of a currently approved collection.

*Description:* The forms constitute the application for an approval of credit union conversions from federal to state charter and from state to federal charter. In addition, forms in the package contain the application and approval for federal insurance of member accounts in credit unions.

*Respondents:* Credit unions seeking to convert from federal to state charter and from state to federal charter and non-federally insured state chartered credit unions seeking federal share insurance.

*Estimated No. of Respondents/ Record-keepers:* 50.

*Estimated Burden Hours Per Response:* 4 hours.

*Frequency of Response:* Other. As credit unions seek approval to convert charter or federal share insurance.

*Estimated Total Annual Burden Hours:* 200 hours.

*Estimated Total Annual Cost:* 0.

By the National Credit Union Administration Board on March 23, 2005.

**Mary Rupp,**

*Secretary of the Board.*

[FR Doc. 05–6154 Filed 3–28–05; 8:45 am]

**BILLING CODE 7535–01–P**

## NUCLEAR REGULATORY COMMISSION

**[Docket No. 72–11]**

### Sacramento Municipal Utility District; Rancho Seco Independent Spent Fuel Storage Installation; Issuance of an Exemption and Conforming Amendment

**AGENCY:** U.S. Nuclear Regulatory Commission.

**ACTION:** Issuance of an exemption and conforming amendment.

**FOR FURTHER INFORMATION CONTACT:** Amy M. Snyder, Project Manager, Spent Fuel Project Office, Office of Nuclear Material Safety and Safeguards, U.S. Nuclear Regulatory Commission, Washington, DC 20555. Telephone: (301) 415–8580; fax number: (301) 415–8555; e-mail: *ams3@nrc.gov.*

**SUPPLEMENTARY INFORMATION:** The U.S. Nuclear Regulatory Commission (NRC) has issued an exemption, pursuant to 10 CFR 72.7, from the provisions of 10 CFR 72.44(d)(3), to the Sacramento Municipal Utility District (SMUD or the licensee). The requested exemption (in conjunction with a conforming license amendment) relieves SMUD from the requirement to submit an annual radioactive effluent report for the Rancho Seco Independent Spent Fuel Storage Installation (ISFSI). SMUD submitted the exemption request by letter dated July 19, 2004, in which it also requested an amendment to the Rancho Seco ISFSI license; specifically, the deletion of Technical Specification 5.5.2., Radiological Environmental Monitoring Program, item (d). The licensee is currently storing spent nuclear fuel at the Rancho Seco ISFSI on the site of the decommissioned Rancho Seco Nuclear Generating Station in Sacramento County, California.

These actions comply with the standards and requirements of the Atomic Energy Act of 1954, as amended (the Act), and the Commission's rules and regulations. The Commission has made appropriate findings as required by the Act and the Commission's rules and regulations in 10 CFR chapter I, which are set forth in the license amendment.

In accordance with 10 CFR 72.46(b)(2), a determination has been made that this exemption and conforming amendment does not present a genuine issue as to whether public health and safety will be significantly affected. Therefore, the publication of a notice of proposed action and an opportunity for hearing or a notice of hearing is not warranted. Notice is hereby given of the right of interested persons to request a hearing on whether the action should be rescinded or modified.

Also in connection with these actions, the Commission prepared an Environmental Assessment (EA) and Finding of No Significant Impact (FONSI). The EA and FONSI were published in the **Federal Register** on January 11, 2005 (70 FR 1911).

The NRC maintains an Agencywide Documents Access Management System (ADAMS), which provides text and image files of NRC's public documents. Supporting documentation may be accessed through the NRC's Public Electronic Reading Room on the Internet at: *http://www.nrc.gov/reading-rm/adams.html.* A copy of the EA and FONSI can be found at this site using the ADAMS accession number ML050040272. Copies of the referenced documents are also available for review at the NRC Public Document Room (PDR), located at 11555 Rockville Pike, Rockville, MD 20852. PDR reference staff can be contacted at 1–800–397–4209, 301–415–4737 or by e-mail to *pdr@nrc.gov.* The PDR reproduction contractor will copy documents for a fee.

Dated in Rockville, Maryland, this 21st day of March, 2005.

For the Nuclear Regulatory Commission.

**Amy M. Snyder,**

*Project Manager, Spent Fuel Project Office, Office of Nuclear Material Safety and Safeguards.*

[FR Doc. E5–1378 Filed 3–28–05; 8:45 am]

BILLING CODE 7590–01–P

## NUCLEAR REGULATORY COMMISSION

### Sunshine Act Meeting

**DATE:** Weeks of March 28, April 4, 11, 18, 25, May 2, 2005.

**PLACE:** Commissioners' Conference Room, 11555 Rockville Pike, Rockville, Maryland.

**STATUS:** Public and closed.

**MATTERS TO BE CONSIDERED:**

**Week of March 28, 2005**

*Monday, March 28, 2005*

9:30 a.m.
Discussion of Security Issues (Closed—Ex. 1 & 9).

*Tuesday, March 29, 2005*

9:30 a.m.
Briefing on Office of Nuclear Security and Incident Response (NSIR) Programs, Performance, and Plans (Public Meeting) (Contact: Robert Caldwell, (301) 415–1243).

The meeting will be webcast live at the Web address—*http://www.nrc.gov.*

1 p.m.
Discussion of Security Issues (Closed—Ex. 1).

**Week of April 4, 2005—Tentative**

*Tuesday, April 5, 2005*

9:30 a.m.
Briefing on Office of Research (RES) Programs, Performance, and Plans (Public Meeting) (Contact: Alix Dvorak, (301) 415–6601).

This meeting will be webcast live at the Web address—*http://www.nrc.gov.*

*Wednesday, April 6, 2005*

9:30 a.m.
Briefing on Status of New Site and Reactor Licensing (Public Meeting) (Contact: Steven Bloom, (301) 415–1313).

This meeting will be webcast live at the Web address—*http://www.nrc.gov.*

*Thursday, April 7, 2005*

1:30 p.m.
Meeting with Advisory Committee on Reactor Safeguards (ACRS) (Public Meeting) (Contact: John Larkins, (301) 415–7360).

This meeting will be webcast live at the Web address—*http://www.nrc.gov.*

**Week of April 11, 2005—Tentative**

There are no meetings scheduled for the Week of April 11, 2005.

**Week of April 18, 2005—Tentative**

*Tuesday, April 19, 2005*

9:30 a.m.
Discussion of Security Issues (Closed—Ex. 1) (Tentative).

*Wednesday, April 20, 2005*

9:30 a.m.
Meeting with Advisory Committee on the Medical Uses of Isotopes (ACMUI) (Public Meeting) (Contact: Angela McIntosh, (301) 415–5030).

This meeting will be webcast live at the Web address—*http://www.nrc.gov.*

1:30 p.m.
Briefing on Office of Nuclear Reactor Regulation (NRR) Programs, Performance, and Plans (Public Meeting) (Contact: Laura Gerke, (301) 415–4099).

This meeting will be webcast live at the Web address—*http://www.nrc.gov.*

**Week of April 25, 2005—Tentative**

*Tuesday, April 26, 2005*

9:30 a.m.
Briefing on Grid Stability and Offsite Power Issues (Public Meeting) (Contact: John Lamb, (301) 415–1446).

This meeting will be webcast live at the Web address—*http://www.nrc.gov.*

**Week of May 2, 2005—Tentative**

There are no meetings scheduled for the week of May 2, 2005.

* The schedule for Commission meetings is subject to change on short notice. To verify the status of meetings

call (recording)—(301) 415–1292. Contact person for more information: Dave Gamberoni, (301) 415–1651.

The NRC Commission Meeting Schedule can be found on the Internet at: *http://www.nrc.gov/what-we-do/policy-making/schedule.html.*

The NRC provides reasonable accommodation to individuals with disabilities where appropriate. If you need a reasonable accommodation to participate in these public meetings, or need this meeting notice or the transcript or other information from the public meetings in another format (*e.g.,* braille, large print), please notify the NRC's Disability Program Coordinator, August Spector, at (301) 415–7080, TDD: (301) 415–2100, or by e-mail at *aks@nrc.gov.* Determinations on requests for reasonable accommodation will be made on a case-by-case basis.

This notice is distributed by mail to several hundred subscribers; if you no longer wish to receive it, or would like to be added to the distribution, please contact the Office of the Secretary, Washington, DC 20555 (301) 415–1969). In addition, distribution of this meeting notice over the Internet system is available. If you are interested in receiving this Commission meeting schedule electronically, please send an electronic message to *dkw@nrc.gov.*

Dated: March 24, 2005.

**R. Michelle Schroll,**

*Office of the Secretary.*

[FR Doc. 05–6239 Filed 3–25–05; 9:07 am]

**BILLING CODE 7590–01–M**

## NUCLEAR REGULATORY COMMISSION

## Biweekly Notice; Applications and Amendments to Facility Operating Licenses Involving No Significant Hazards Considerations

### I. Background

Pursuant to section 189a.(2) of the Atomic Energy Act of 1954, as amended (the Act), the U.S. Nuclear Regulatory Commission (the Commission or NRC staff) is publishing this regular biweekly notice. The Act requires the Commission publish notice of any amendments issued, or proposed to be issued and grants the Commission the authority to issue and make immediately effective any amendment to an operating license upon a determination by the Commission that such amendment involves no significant hazards consideration, notwithstanding the pendency before the Commission of a request for a hearing from any person.

This biweekly notice includes all notices of amendments issued, or proposed to be issued from March 4, 2005, through March 17, 2005. The last biweekly notice was published on March 15, 2005 (70 FR 12743).

### Notice of Consideration of Issuance of Amendments to Facility Operating Licenses, Proposed No Significant Hazards Consideration Determination, and Opportunity for a Hearing

The Commission has made a proposed determination that the following amendment requests involve no significant hazards consideration. Under the Commission's regulations in 10 CFR 50.92, this means that operation of the facility in accordance with the proposed amendment would not (1) involve a significant increase in the probability or consequences of an accident previously evaluated; or (2) create the possibility of a new or different kind of accident from any accident previously evaluated; or (3) involve a significant reduction in a margin of safety. The basis for this proposed determination for each amendment request is shown below.

The Commission is seeking public comments on this proposed determination. Any comments received within 30 days after the date of publication of this notice will be considered in making any final determination. Within 60 days after the date of publication of this notice, the licensee may file a request for a hearing with respect to issuance of the amendment to the subject facility operating license and any person whose interest may be affected by this proceeding and who wishes to participate as a party in the proceeding must file a written request for a hearing and a petition for leave to intervene.

Normally, the Commission will not issue the amendment until the expiration of 60 days after the date of publication of this notice. The Commission may issue the license amendment before expiration of the 60-day period provided that its final determination is that the amendment involves no significant hazards consideration. In addition, the Commission may issue the amendment prior to the expiration of the 30-day comment period should circumstances change during the 30-day comment period such that failure to act in a timely way would result, for example in derating or shutdown of the facility. Should the Commission take action prior to the expiration of either the comment period or the notice period, it will publish in the **Federal Register** a notice of issuance. Should the Commission make a final No Significant Hazards Consideration Determination, any hearing will take place after issuance. The Commission expects that the need to take this action will occur very infrequently.

Written comments may be submitted by mail to the Chief, Rules and Directives Branch, Division of Administrative Services, Office of Administration, U.S. Nuclear Regulatory Commission, Washington, DC 20555–0001, and should cite the publication date and page number of this **Federal Register** notice. Written comments may also be delivered to Room 6D22, Two White Flint North, 11545 Rockville Pike, Rockville, Maryland, from 7:30 a.m. to 4:15 p.m. Federal workdays. Copies of written comments received may be examined at the Commission's Public Document Room (PDR), located at One White Flint North, Public File Area O1F21, 11555 Rockville Pike (first floor), Rockville, Maryland. The filing of requests for a hearing and petitions for leave to intervene is discussed below.

Within 60 days after the date of publication of this notice, the licensee may file a request for a hearing with respect to issuance of the amendment to the subject facility operating license and any person whose interest may be affected by this proceeding and who wishes to participate as a party in the proceeding must file a written request for a hearing and a petition for leave to intervene. Requests for a hearing and a petition for leave to intervene shall be filed in accordance with the Commission's ''Rules of Practice for Domestic Licensing Proceedings'' in 10 CFR part 2. Interested persons should consult a current copy of 10 CFR 2.309, which is available at the Commission's PDR, located at One White Flint North, Public File Area 01F21, 11555 Rockville Pike (first floor), Rockville, Maryland. Publicly available records will be accessible from the Agencywide Documents Access and Management System's (ADAMS) Public Electronic Reading Room on the Internet at the NRC Web site, *http://www.nrc.gov/reading-rm/doc-collections/cfr/.* If a request for a hearing or petition for leave to intervene is filed within 60 days, the Commission or a presiding officer designated by the Commission or by the Chief Administrative Judge of the Atomic Safety and Licensing Board Panel, will rule on the request and/or petition; and the Secretary or the Chief Administrative Judge of the Atomic Safety and Licensing Board will issue a notice of a hearing or an appropriate order.

As required by 10 CFR 2.309, a petition for leave to intervene shall set

forth with particularity the interest of the petitioner in the proceeding, and how that interest may be affected by the results of the proceeding. The petition should specifically explain the reasons why intervention should be permitted with particular reference to the following general requirements: (1) The name, address, and telephone number of the requestor or petitioner; (2) the nature of the requestor's/petitioner's right under the Act to be made a party to the proceeding; (3) the nature and extent of the requestor's/petitioner's property, financial, or other interest in the proceeding; and (4) the possible effect of any decision or order which may be entered in the proceeding on the requestor's/petitioner's interest. The petition must also set forth the specific contentions which the petitioner/requestor seeks to have litigated at the proceeding.

Each contention must consist of a specific statement of the issue of law or fact to be raised or controverted. In addition, the petitioner/requestor shall provide a brief explanation of the bases for the contention and a concise statement of the alleged facts or expert opinion which support the contention and on which the petitioner/requestor intends to rely in proving the contention at the hearing. The petitioner/requestor must also provide references to those specific sources and documents of which the petitioner is aware and on which the petitioner/requestor intends to rely to establish those facts or expert opinion. The petition must include sufficient information to show that a genuine dispute exists with the applicant on a material issue of law or fact. Contentions shall be limited to matters within the scope of the amendment under consideration. The contention must be one which, if proven, would entitle the petitioner/requestor to relief. A petitioner/requestor who fails to satisfy these requirements with respect to at least one contention will not be permitted to participate as a party.

Those permitted to intervene become parties to the proceeding, subject to any limitations in the order granting leave to intervene, and have the opportunity to participate fully in the conduct of the hearing.

If a hearing is requested, and the Commission has not made a final determination on the issue of no significant hazards consideration, the Commission will make a final determination on the issue of no significant hazards consideration. The final determination will serve to decide when the hearing is held. If the final determination is that the amendment request involves no significant hazards consideration, the Commission may issue the amendment and make it immediately effective, notwithstanding the request for a hearing. Any hearing held would take place after issuance of the amendment. If the final determination is that the amendment request involves a significant hazards consideration, any hearing held would take place before the issuance of any amendment.

A request for a hearing or a petition for leave to intervene must be filed by: (1) First class mail addressed to the Office of the Secretary of the Commission, U.S. Nuclear Regulatory Commission, Washington, DC 20555–0001, Attention: Rulemaking and Adjudications Staff; (2) courier, express mail, and expedited delivery services: Office of the Secretary, Sixteenth Floor, One White Flint North, 11555 Rockville Pike, Rockville, Maryland, 20852, Attention: Rulemaking and Adjudications Staff; (3) e-mail addressed to the Office of the Secretary, U.S. Nuclear Regulatory Commission, *HearingDocket@nrc.gov;* or (4) facsimile transmission addressed to the Office of the Secretary, U.S. Nuclear Regulatory Commission, Washington, DC, Attention: Rulemakings and Adjudications Staff at (301) 415–1101, verification number is (301) 415–1966. A copy of the request for hearing and petition for leave to intervene should also be sent to the Office of the General Counsel, U.S. Nuclear Regulatory Commission, Washington, DC 20555–0001, and it is requested that copies be transmitted either by means of facsimile transmission to (301) 415–3725 or by e-mail to *OGCMailCenter@nrc.gov.* A copy of the request for hearing and petition for leave to intervene should also be sent to the attorney for the licensee.

Nontimely requests and/or petitions and contentions will not be entertained absent a determination by the Commission or the presiding officer of the Atomic Safety and Licensing Board that the petition, request and/or the contentions should be granted based on a balancing of the factors specified in 10 CFR 2.309(a)(1)(i)–(viii).

For further details with respect to this action, see the application for amendment which is available for public inspection at the Commission's PDR, located at One White Flint North, Public File Area 01F21, 11555 Rockville Pike (first floor), Rockville, Maryland. Publicly available records will be accessible from the ADAMS Public Electronic Reading Room on the Internet at the NRC Web site, *http://www.nrc.gov/reading-rm/adams.html.* If you do not have access to ADAMS or if there are problems in accessing the documents located in ADAMS, contact the PDR Reference staff at 1 (800) 397–4209, (301) 415–4737 or by e-mail to *pdr@nrc.gov.*

*AmerGen Energy Company, LLC, et al., Docket No. 50–219, Oyster Creek Nuclear Generating Station, Ocean County, New Jersey*

*Date of amendment request:* February 24, 2005.

*Description of amendment request:* The licensee proposed to revise Table 3.1.1, ''Protective Instrumentation Requirements,'' of the Technical Specifications to clarify the conditions under which the reactor building closed cooling water (RBCCW) pumps and the service water (SW) pumps will trip during a loss-of-coolant accident (LOCA). The revised wording would state that the RBCCW and SW pumps will trip during a LOCA only if offsite power is unavailable. The licensee also proposed to editorially move a footnote on page 3.6–1 to its correct place on page 3.6–2.

*Basis for proposed no significant hazards consideration determination:* As required by 10 CFR 50.91(a), the licensee has provided its analysis of the issue of no significant hazards consideration, which is presented below:

(1) Does the proposed change involve a significant increase in the probability or consequences of an accident previously evaluated?

Response: No.

The proposed revision to Technical Specification (TS) Table 3.1.1 to clarify the tripping of the Service Water (SW) and Reactor Building Closed Cooling Water (RBCCW) pumps documents the as-built controls for these loads. Amendment No. 42 to the Oyster Creek Licensing Application concluded that these pumps are not required to perform any functions related to safe plant shutdown. During a loss of coolant accident (LOCA) condition, with offsite power available, the plant electrical busses have enough capacity and capability to supply the SW and RBCCW pumps. This proposed change is an administrative change only, and is being made to align the Oyster Creek Technical Specifications with the design of the plant. No physical changes are being made to the plant. Also, the footnote on TS page 3.6–1 would be relocated to TS page 3.6–2 to appear on the same TS page as the Specification to which it applies. The proposed changes do not alter the physical design or operational procedures associated with any plant structure, system, or component.

Therefore, the proposed changes do not involve a significant increase in the probability or consequences of an accident previously evaluated.

(2) Does the proposed change create the possibility of a new or different kind of

accident from any accident previously evaluated?

Response: No.

The proposed revision to Technical Specification Table 3.1.1 to clarify the tripping of the SW and RBCCW pumps documents as-built controls for these loads. These pumps provide cooling to various non-safety related plant equipment. Following a LOCA condition, with offsite power available, these pumps will help in removing plant heat loads. This clarification that the SW and RBCCW pumps do not trip during a LOCA, with offsite power available, does not affect the Emergency Diesel Generator time delayed loading sequence. The relocation of the footnote applicable to Specification 3.6.A.4.1 is editorial in nature and has no impact on any accident previously evaluated. Accordingly, the proposed changes do not introduce any new accident initiators, nor do they reduce or adversely affect the capabilities of any plant structure or system in the performance of their safety function.

Therefore, the proposed changes do not create the possibility of a new or different kind of accident from any accident previously evaluated.

(3) Does the proposed change involve a significant reduction in a margin of safety?

Response: No.

The proposed revision to Technical Specification Table 3.1.1 to clarify the tripping of the SW and RBCCW pumps documents as-built controls for these loads. The NRC Safety Evaluation Report (SER) for Amendment 42 to the Oyster Creek Licensing Application concluded that it is acceptable to automatically trip the SW and RBCCW pumps during a loss of coolant accident. The NRC SER for Technical Specification Amendment 60 concluded that the immediate tripping of the RBCCW pump and the time delayed tripping of the SW pumps during a LOCA was also acceptable. The clarification that the SW and RBCCW pumps do not trip during a loss of coolant accident when offsite power is available does not reduce any margin of safety because these pumps are not required to mitigate the consequences of any postulated accident. The relocation of the footnote applicable to Specification 3.6.A.4.1 is editorial in nature and has no impact on any accident margin of safety.

Therefore, the proposed changes do not involve a significant reduction in a margin of safety.

The NRC staff has reviewed the licensee's analysis and, based on this review, it appears that the three standards of 10 CFR 50.92(c) are satisfied. Therefore, the NRC staff proposes to determine that the amendment request involves no significant hazards consideration.

*Attorney for licensee:* Thomas S. O'Neill, Associate General Counsel, Exelon Generation Company, LCC, 4300 Winfield Road, Warrenville, IL 60555.

*NRC Section Chief:* Richard J. Laufer.

*Dominion Nuclear Connecticut Inc., et al., Docket Nos. 50–336 and 50–423, Millstone Power Station, Unit Nos. 2 and 3, New London County, Connecticut*

*Date of amendment request:* February 25, 2005.

*Description of amendment request:* The proposed changes would amend Operating License DPR–65 for Millstone Power Station, Unit No. 2 (MPS2) and Operating License NPF–49 for Millstone Power Station, Unit No. 3 (MPS3) by incorporating certain administrative changes into the MPS2 and MPS3 Technical Specifications (TSs).

*Basis for proposed no significant hazards consideration determination:* As required by 10 CFR 50.91(a), the licensee has provided its analysis of the issue of no significant hazards consideration, which is presented below:

1. Does the proposed amendment involve a significant increase in the probability or consequences of an accident previously evaluated?

Response: No.

The proposed changes are administrative in nature and do not alter any of the requirements of the affected TS[s]. The proposed changes do not modify any plant equipment and do not impact any failure modes that could lead to an accident. Additionally, the proposed changes have no effect on the consequence of any analyzed accident since the changes do not affect any equipment related to accident mitigation. Based on this discussion, the proposed amendment does not increase the probability or consequences of an accident previously evaluated.

2. Does the proposed amendment create the possibility of a new or different kind of accident from any accident previously evaluated?

Response: No.

The proposed changes are administrative in nature. They do not modify any plant equipment and there is no impact on the capability of the existing equipment to perform their intended functions. No system setpoints are being modified and no changes are being made to the method in which plant operations are conducted. No new failure modes are introduced by the proposed changes. The proposed amendment does not introduce accident initiators or malfunctions that would cause a new or different kind of accident. Therefore, the proposed amendment does not create the possibility of a new or different kind of accident from any accident previously evaluated.

3. Does the proposed amendment involve a significant reduction in a margin of safety?

Response: No.

These changes are administrative in nature and do not alter any of the requirements of the affected TS[s]. The proposed changes do not affect any of the assumptions used in the accident analysis, nor do they affect any operability requirements for equipment important to plant safety. Therefore, the proposed changes will not result in a significant reduction in the margin of safety as defined in the bases for technical specifications covered in this license amendment request.

The NRC staff has reviewed the licensee's analysis and, based on this review, it appears that the three standards of 10 CFR 50.92(c) are satisfied. Therefore, the NRC staff proposes to determine that the amendment request involves no significant hazards consideration.

*Attorney for licensee:* Lillian M. Cuoco, Senior Nuclear Counsel, Dominion Nuclear Connecticut, Inc., Waterford, CT 06141–5127.

*NRC Section Chief:* Darrell J. Roberts.

*Entergy Gulf States, Inc., and Entergy Operations, Inc., Docket No. 50–458, River Bend Station, Unit 1, West Feliciana Parish, Louisiana*

*Date of amendment request:* March 8, 2005.

*Description of amendment request:* The proposed amendment would revise Technical Specification (TS) 5.5.13, Primary Containment Leakage Rate Testing Program, for the Integrated Leak Rate Testing (ILRT) program to add an exception to the commitment to follow the guidelines of Regulatory Guide 1.163, ''Performance-Based Containment Leak-Test Program.'' The effect of this request would be a one-time extension of the interval since the last ILRT from 15 years to 15 years and 4 months (*i.e.*, from August 2007 to December 2007).

*Basis for proposed no significant hazards consideration determination:* As required by 10 CFR 50.91(a), the licensee has provided its analysis of the issue of no significant hazards consideration, which is presented below:

1. Will operation of the facility in accordance with this proposed amendment involve a significant increase in the probability or consequences of an accident previously evaluated?

Response: No.

The proposed amendment to TS 5.5.13 allows a one-time extension to the current interval for the ILRT. The current interval of fifteen years, based on past performance, would be extended on a one-time basis to 15-years and 4 months from the date of the last test. The proposed extension to the ILRT cannot increase the probability of an accident since there are no design or operating changes involved and the test is not an accident initiator. The proposed extension of the test interval does not involve a significant increase in the consequences since analysis has shown that, the proposed extension of the ILRT and DWBT [Drywell Bypass Test] frequency has a minimal impact on plant risk. Therefore, the proposed change does not involve a significant increase in the probability or consequences of an accident previously evaluated.

2. Will operation of the facility in accordance with this proposed amendment create the possibility of a new or different kind of accident from any accident previously evaluated?

Response: No.

The proposed extension to the interval for the ILRT does not involve any design or operational changes that could lead to a new or different kind of accident from any accidents previously evaluated. The tests are not being modified, but are only being performed after a longer interval. The proposed change does not involve a physical alteration of the plant (no new or different type of equipment will be installed) or a change in the methods governing normal plant operation. Therefore, the proposed change does not create the possibility of a new or different kind of accident from any previously evaluated.

3. Will operation of the facility in accordance with this proposed amendment involve a significant reduction in a margin of safety?

Response: No.

An evaluation of extending the ILRT DWBT surveillance frequency from once in 10 years to once in 15 years and 4 months has been performed using methodologies based on the approved ILRT methodologies. This evaluation assumed that the DWBT frequency was being adjusted in conjunction with the ILRT frequency. This analysis used realistic, but still conservative, assumptions with regard to developing the frequency of leakage classes associated with the ILRT and DWBT. The results from this conservative analysis indicates that the proposed extension of the ILRT frequency has a minimal impact on plant risk and therefore, the proposed change does not involve a significant reduction in a margin of safety.

Based on the above, Entergy concludes that the proposed amendment(s) present no significant hazards consideration under the standards set forth in 10 CFR 50.92(c), and, accordingly, a finding of ''no significant hazards consideration'' is justified.

The NRC staff has reviewed the licensee's analysis and, based on this review, it appears that the three standards of 10 CFR 50.92(c) are satisfied. Therefore, the NRC staff proposes to determine that the amendment request involves no significant hazards consideration.

*Attorney for licensee:* Mark Wetterhahn, Esq., Winston & Strawn, 1400 L Street, NW., Washington, DC 20005.

*NRC Section Chief:* Allen G. Howe.

*Entergy Operations, Inc., Docket No. 50–368, Arkansas Nuclear One, Unit No. 2, Pope County, Arkansas*

*Date of amendment request:* December 20, 2004.

*Description of amendment request:* Entergy Operations, Inc. is proposing that the Arkansas Nuclear One Unit 2 (ANO–2) Facility Operating License be amended to revise the requirements for ensuring containment structural integrity. The proposed changes modify the Containment Structural Integrity Technical Specification (TS) 3.6.1.5 to delete the existing Surveillance Requirements (SR) and add a new SR to verify containment structural integrity in accordance with a new Containment Tendon Surveillance Program. A new Containment Tendon Surveillance Program is added to TS 6.5.6 and a new reporting requirement is being added to TS 6.6.6. The proposed changes are generally consistent with NUREG 1432, ''Standard Technical Specifications Combustion Engineering Plants,'' Revision 3. This request for amendment also contains proposed administrative changes related to page numbering.

*Basis for proposed no significant hazards consideration determination:* As required by 10 CFR 50.91(a), the licensee has provided its analysis of the issue of no significant hazards consideration, which is presented below:

Criterion 1—Does Not Involve a Significant Increase in the Probability or Consequences of an Accident Previously Evaluated.

The containment building is not considered to be the initiator of any accident previously evaluated, but serves to mitigate accidents that could allow a release to the environment. The proposed TS change will provide for containment tendon inspections as required by 10 CFR 50.55a and prevent or inhibit release from the containment building as designed. Through appropriate inspections and implementation of corrective actions for any degradation discovered during the inspections that might lead to containment structural failures, the probability or consequences of accidents will not be increased.

Criterion 2—Does Not Create the Possibility of a New or Different Kind of Accident from any Previously Evaluated.

The proposed change does not change the design, configuration, or method of operation of the plant. By implementing corrective actions for any degradation discovered during the required inspections of the containment, the possibility of a new or different kind of accident will not be created. Implementation of the requirements of Subsection IWL of the ASME code [American Society of Mechanical Engineers Boiler and Pressure Vessel Code] and those of 10 CFR 50.55a(b)(2) provide an equally acceptable containment inspection program.

Criterion 3—Does Not Involve a Significant Reduction in the Margin of Safety.

The proposed change to incorporate the applicable requirements of Subsection IWL of the ASME Code and of 10 CFR 50.55a(b)(2) into the ANO–2 containment inspection program has no impact on any safety analysis assumptions. The addition of structural integrity requirements to ANO–2 TS Specification 3.6.1.5 imposes consistent requirements with those previously specified in the ANO–2 TSs. The requirements of ASME IWL are more restrictive than those currently provided in the existing ANO–2 technical specifications. As a result, the margin of safety is not reduced by the proposed change.

The NRC staff has reviewed the licensee's analysis and, based on this review, it appears that the three standards of 10 CFR 50.92 are satisfied. Therefore, the NRC staff proposes to determine that the amendment request involves no significant hazards consideration.

*Attorney for licensee:* Nicholas S. Reynolds, Esquire, Winston and Strawn, 1400 L Street, NW., Washington, DC 20005–3502.

*NRC Section Chief:* Allen G. Howe.

*Indiana Michigan Power Company, Docket Nos. 50–315 and 50–316, Donald C. Cook Nuclear Plant, Units 1 and 2, Berrien County, Michigan*

*Date of amendment requests:* February 25, 2005.

*Description of amendment requests:* The proposed amendments would modify the Technical Specifications by revising the near-end-of-life Moderator Temperature Coefficient (MTC) Surveillance Requirement by placing a set of conditions on core performance, which, if met, would allow conditional exemption from the required MTC measurement.

*Basis for proposed no significant hazards consideration determination:* As required by 10 CFR 50.91(a), the licensee has provided its analysis of the issue of no significant hazards consideration, which is presented below:

1. Does the proposed change involve a significant increase in the probability of occurrence or consequences of an accident previously evaluated?

Response: No.

The probability or consequences of accidents previously evaluated in the Updated Final Safety Analysis Report (UFSAR) are unaffected by this proposed change because there is no change to any equipment response or accident mitigation scenario. There are no additional challenges to fission product barrier integrity.

Therefore, the proposed change does not involve a significant increase in the probability or consequences of an accident previously evaluated.

2. Does the proposed change create the possibility of a new or different kind of accident from any accident previously evaluated?

Response: No.

No new accident scenarios, failure mechanisms, or limiting single failures are introduced as a result of the proposed change. The proposed change does not challenge the performance or integrity of any safety-related system.

Therefore, the proposed change does not create the possibility of a new or different

kind of accident from any previously evaluated.

3. Does the proposed change involve a significant reduction in a margin of safety?

Response: No.

The margin of safety associated with the acceptance criteria of any accident is unchanged. The proposed change will have no affect on the availability, operability, or performance of the safety-related systems and components. A change to a surveillance requirement is proposed, but the limiting conditions for operation required by the Technical Specifications (TS) are not changed.

The Technical Specifications Bases are founded in part on the ability of the regulatory criteria to be satisfied assuming the limiting conditions for operation are met for the various systems. Conformance to the regulatory criteria for operation with the conditional exemption from the near-end of life moderator temperature coefficient (MTC) measurement is demonstrated and the regulatory limits are not exceeded. Therefore, the margin of safety as defined in the TS is not reduced.

Therefore, the proposed change does not involve a significant reduction in the margin of safety.

The NRC staff has reviewed the licensee's analysis and, based on this review, it appears that the three standards of 10 CFR 50.92(c) are satisfied. Therefore, the NRC staff proposes to determine that the amendment requests involve no significant hazards consideration.

*Attorney for licensee:* James M. Petro, Jr., Esquire, One Cook Place, Bridgman, MI 49106.

*NRC Section Chief:* L. Raghavan.

*Nebraska Public Power District, Docket No. 50–298, Cooper Nuclear Station, Nemaha County, Nebraska*

*Date of amendment request:* March 8, 2005.

*Description of amendment request:* The proposed amendment would revise Technical Specification 2.1.1.2 for the single recirculation loop Safety Limit Minimum Critical Power Ratio (SLMCPR) value to reflect results of a cycle-specific calculation for Cycle 23 operations.

*Basis for proposed no significant hazards consideration determination:* As required by 10 CFR 50.91(a), the licensee has provided its analysis of the issue of no significant hazards consideration, which is presented below:

1. Do the proposed changes involve a significant increase in the probability or consequences of an accident previously evaluated?

Response: No.

The probability of an evaluated accident is derived from the probabilities of the individual precursors to that accident. Changing the SLMCPR does not increase the probability of an evaluated accident. The change does not require any physical plant modifications, physically affect any plant components, or entail changes in plant operation. Therefore, no individual precursors of an accident are affected.

The consequences of an evaluated accident are determined by the operability of plant systems designed to mitigate those consequences. Limits have been established, consistent with NRC approved methods, to ensure that fuel performance during normal, transient, and accident conditions is acceptable. The proposed change conservatively establishes the safety limit for the minimum critical power ratio for CNS Cycle 23 such that the fuel is protected during normal operation and during any plant transients or anticipated operational occurrences.

The proposed change revises the SLMCPR to protect the fuel during normal operation as well as during any transients or anticipated operational occurrences. Operational limits Minimum Critical Power Ratio (MCPR) are established based on the proposed SLMCPR to ensure that the SLMCPR is not violated during all modes of operation. This will ensure that the fuel design safety criteria (*i.e.*, that at least 99.9% of the fuel rods do not experience transition boiling during normal operation and anticipated operational occurrences) is met. Since the operability of plant systems designed to mitigate any consequences of accidents has not changed, the consequences of an accident previously evaluated are not expected to increase.

Based on the above, NPPD concludes that the proposed changes do not involve a significant increase in the probability or consequences of an accident previously evaluated.

2. Do the proposed changes create the possibility of a new or different kind of accident from any accident previously evaluated?

Response: No.

Creation of the possibility of a new or different kind of accident would require the creation of one or more new precursors of that accident. New accident precursors may be created by modifications of the plant configuration or changes in allowable modes of operation. The proposed change does not involve any modifications of the plant configuration or allowable modes of operation. The proposed change to the SLMCPR assures that safety criteria are maintained for Cycle 23.

Based on the above, NPPD concludes that the proposed changes do not create the possibility of a new or different kind of accident from any previously evaluated.

3. Do the proposed changes involve a significant reduction in a margin of safety?

Response: No.

The value of the proposed SLMCPR provides a margin of safety by ensuring that no more than 0.1% of the rods are expected to be in boiling transition if the MCPR limit is not violated. The proposed change will ensure the appropriate level of fuel protection is maintained. Additionally, operational limits are established based on the proposed SLMCPR to ensure that the SLMCPR is not violated during all modes of operation. This will ensure that the fuel design safety criteria (*i.e.*, that at least 99.9% of the fuel rods do not experience transition boiling during normal operation as well as anticipated operational occurrences) are met.

Based on the above, NPPD concludes that the proposed changes do not involve a significant reduction in a margin of safety.

The NRC staff has reviewed the licensee's analysis and, based on this review, it appears that the three standards of 10 CFR 50.92(c) are satisfied. Therefore, the NRC staff proposes to determine that the amendment request involves no significant hazards consideration.

*Attorney for licensee:* Mr. John C. McClure, Nebraska Public Power District, Post Office Box 499, Columbus, NE 68602–0499.

*NRC Section Chief:* Allen G. Howe.

*Nuclear Management Company, LLC, Docket No. 50–305, Kewaunee Nuclear Power Plant, Kewaunee County, Wisconsin*

*Date of amendment request:* February 3, 2005.

*Description of amendment request:* The proposed amendments would modify the Technical Specifications (TSs) by revising TS 6.16.b.1, ''Radioactive Effluent Controls Program,'' to be consistent with the intent of 10 CFR 20 and NUREG–1431, ''Standard Technical Specifications Westinghouse Plants'' (STS).

*Basis for proposed no significant hazards consideration determination:* As required by 10 CFR 50.91(a), the licensee has provided its analysis of the issue of no significant hazards consideration, which is presented below:

1. Does the proposed amendment involve a significant increase in the probability or consequences of an accident previously evaluated?

NMC [Nuclear Management Company, LLC] Response:

No. Updating the specification to be consistent with 10 CFR 20 and the STS has no impact on plant structures, systems, or components, does not affect any accident initiators, and does not change any safety analysis. Therefore, the changes do not involve an increase in the probability or consequences of an accident previously evaluated.

2. Does the proposed amendment create the possibility of a new or different kind of accident from any accident previously evaluated?

NMC Response:

No. Updating the specification to be consistent with 10 CFR 20 and the STS will not change any equipment, require new equipment to be installed, or change the way current equipment operates. No credible new failure mechanisms, malfunctions, or

accident initiators are created by the proposed changes. Therefore, the changes do not create the possibility of a new or different kind of accident from any accident previously evaluated.

3. Does the proposed amendment involve a significant reduction in a margin of safety?

NMC Response:

No. Updating the specification to be consistent with 10 CFR 20 and the STS has no impact on inputs to the safety analysis or to automatic plant actions. It also does not impact plant equipment or operation. Therefore, the change does not reduce the margin of safety.

The NRC staff has reviewed the licensee's analysis and, based on this review, it appears that the three standards of 10 CFR 50.92(c) are satisfied. Therefore, the NRC staff proposes to determine that the amendment request involves no significant hazards consideration.

*Attorney for licensee:* Bradley D. Jackson, Esq., Foley and Lardner, P.O. Box 1497, Madison, WI 53701–1497.

*NRC Section Chief:* L. Raghavan.

*Nuclear Management Company, LLC, Docket Nos. 50–266 and 50–301, Point Beach Nuclear Plant, Units 1 and 2, Town of Two Creeks, Manitowoc County, Wisconsin*

*Date of amendment request:* October 15, 2004.

*Description of amendment request:* The proposed amendment revises TS 5.5.6, ''Reactor Coolant Pump Flywheel Inspection Program,'' to extend the allowable inspection interval to 20 years.

The NRC staff issued a notice of availability of a model safety evaluation and model no significant hazards consideration (NSHC) determination for referencing in license amendment applications in the **Federal Register** on October 22, 2003 (68 FR 60422). The licensee affirmed the applicability of the model NSHC determination in its application dated October 15, 2004.

*Basis for proposed no significant hazards consideration determination:* As required by 10 CFR 50.91(a), an analysis of the issue of no significant hazards consideration is presented below:

Criterion 1—The proposed change does not involve a significant increase in the probability or consequences of an accident previously evaluated.

The proposed change to the RCP flywheel examination frequency does not change the response of the plant to any accidents. The RCP will remain highly reliable and the proposed change will not result in a significant increase in the risk of plant operation. Given the extremely low failure probabilities for the RCP motor flywheel during normal and accident conditions, the extremely low probability of a loss-of-coolant accident (LOCA) with loss of offsite power (LOOP), and assuming a conditional core damage probability (CCDP) of 1.0 (complete failure of safety systems), the core damage frequency (CDF) and change in risk would still not exceed the NRC's acceptance guidelines contained in Regulatory Guide (RG) 1.174 (<1.0E–6 per year). Moreover, considering the uncertainties involved in this evaluation, the risk associated with the postulated failure of an RCP motor flywheel is significantly low. Even if all four RCP motor flywheels are considered in the bounding plant configuration case, the risk is still acceptably low.

The proposed change does not adversely affect accident initiators or precursors, nor alter the design assumptions, conditions, or configuration of the facility, or the manner in which the plant is operated and maintained; alter or prevent the ability of structures, systems, components (SSCs) from performing their intended function to mitigate the consequences of an initiating event within the assumed acceptance limits; or affect the source term, containment isolation, or radiological release assumptions used in evaluating the radiological consequences of an accident previously evaluated. Further, the proposed change does not increase the type or amount of radioactive effluent that may be released offsite, nor significantly increase individual or cumulative occupational/public radiation exposure. The proposed change is consistent with the safety analysis assumptions and resultant consequences. Therefore, the proposed change does not involve a significant increase in the probability or consequences of an accident previously evaluated.

Criterion 2—The proposed change does not create the possibility of a new or different kind of accident from any accident previously evaluated.

The proposed change in flywheel inspection frequency does not involve any change in the design or operation of the RCP. Nor does the change to examination frequency affect any existing accident scenarios, or create any new or different accident scenarios. Further, the change does not involve a physical alteration of the plant (i.e., no new or different type of equipment will be installed) or alter the methods governing normal plant operation. In addition, the change does not impose any new or different requirements or eliminate any existing requirements, and does not alter any assumptions made in the safety analysis. The proposed change is consistent with the safety analysis assumptions and current plant operating practice. Therefore, the proposed change does not create the possibility of a new or different kind of accident from any accident previously evaluated.

Criterion 3—The proposed change does not involve a significant reduction in a margin of safety.

The proposed change does not alter the manner in which safety limits, limiting safety system settings, or limiting conditions for operation are determined. The safety analysis acceptance criteria are not impacted by this change. The proposed change will not result in plant operation in a configuration outside of the design basis. The calculated impact on risk is insignificant and meets the acceptance criteria contained in RG 1.174. There are no significant mechanisms for inservice degradation of the RCP flywheel. Therefore, the proposed change does not involve a significant reduction in a margin of safety.

The NRC staff proposes to determine that the amendment request involves no significant hazards consideration.

*Attorney for licensee:* Jonathan Rogoff, Esquire, Vice President, Counsel & Secretary, Nuclear Management Company, LLC, 700 First Street, Hudson, WI 54016.

*NRC Section Chief:* L. Raghavan.

**PSEG Nuclear LLC, Docket Nos. 50–272 and 50–311, Salem Nuclear Generating Station, Unit Nos. 1 and 2, Salem County, New Jersey**

*Date of amendment request:* September 27, 2004.

*Description of amendment request:* The proposed amendment would revise the reactor coolant pump (RCP) flywheel inspection surveillance requirements to extend the allowable inspection interval to 20 years.

The NRC staff issued a notice of availability of a model safety evaluation and model no significant hazards consideration (NSHC) determination for referencing in license amendment applications in the **Federal Register** on October 22, 2003 (68 FR 60422). The licensee affirmed the applicability of the model NSHC determination in its application dated September 27, 2004.

*Basis for proposed no significant hazards consideration determination:* As required by 10 CFR 50.91(a), an analysis of the issue of no significant hazards consideration is presented below:

Criterion 1—The proposed change does not involve a significant increase in the probability or consequences of an accident previously evaluated.

The proposed change to the RCP flywheel examination frequency does not change the response of the plant to any accidents. The RCP will remain highly reliable and the proposed change will not result in a significant increase in the risk of plant operation. Given the extremely low failure probabilities for the RCP motor flywheel during normal and accident conditions, the extremely low probability of a loss-of-coolant accident (LOCA) with loss of offsite power (LOOP), and assuming a conditional core damage probability (CCDP) of 1.0 (complete failure of safety systems), the core damage frequency (CDF) and change in risk would still not exceed the NRC's acceptance guidelines contained in Regulatory Guide (RG) 1.174 (<1.0E–6 per year). Moreover, considering the uncertainties involved in this evaluation, the risk associated with the postulated failure of an RCP motor flywheel is significantly low. Even if all four RCP motor flywheels are considered in the

bounding plant configuration case, the risk is still acceptably low.

The proposed change does not adversely affect accident initiators or precursors, nor alter the design assumptions, conditions, or configuration of the facility, or the manner in which the plant is operated and maintained; alter or prevent the ability of structures, systems, components (SSCs) from performing their intended function to mitigate the consequences of an initiating event within the assumed acceptance limits; or affect the source term, containment isolation, or radiological release assumptions used in evaluating the radiological consequences of an accident previously evaluated. Further, the proposed change does not increase the type or amount of radioactive effluent that may be released offsite, nor significantly increase individual or cumulative occupational/public radiation exposure. The proposed change is consistent with the safety analysis assumptions and resultant consequences. Therefore, the proposed change does not involve a significant increase in the probability or consequences of an accident previously evaluated.

Criterion 2—The proposed change does not create the possibility of a new or different kind of accident from any accident previously evaluated.

The proposed change in flywheel inspection frequency does not involve any change in the design or operation of the RCP. Nor does the change to examination frequency affect any existing accident scenarios, or create any new or different accident scenarios. Further, the change does not involve a physical alteration of the plant (i.e., no new or different type of equipment will be installed) or alter the methods governing normal plant operation. In addition, the change does not impose any new or different requirements or eliminate any existing requirements, and does not alter any assumptions made in the safety analysis. The proposed change is consistent with the safety analysis assumptions and current plant operating practice. Therefore, the proposed change does not create the possibility of a new or different kind of accident from any accident previously evaluated.

Criterion 3—The proposed change does not involve a significant reduction in a margin of safety.

The proposed change does not alter the manner in which safety limits, limiting safety system settings, or limiting conditions for operation are determined. The safety analysis acceptance criteria are not impacted by this change. The proposed change will not result in plant operation in a configuration outside of the design basis. The calculated impact on risk is insignificant and meets the acceptance criteria contained in RG 1.174. There are no significant mechanisms for inservice degradation of the RCP flywheel. Therefore, the proposed change does not involve a significant reduction in a margin of safety.

The NRC staff proposes to determine that the amendment request involves no significant hazards consideration.

*Attorney for licensee:* Jeffrie J. Keenan, Esquire, Nuclear Business Unit—N21, P.O. Box 236, Hancocks Bridge, NJ 08038.

*NRC Section Chief:* Darrell J. Roberts.

**PSEG Nuclear LLC, Docket Nos. 50–272 and 50–311, Salem Nuclear Generating Station, Unit Nos. 1 and 2, Salem County, New Jersey**

*Docket No. 50–354, Hope Creek Generating Station, Salem County, New Jersey Date of amendment request:* January 11, 2005. *Description of amendment request:* The proposed amendment would delete the Technical Specification (TS) requirements to submit monthly operating reports and occupational radiation exposure reports.

The NRC staff issued a notice of availability of a model no significant hazards consideration (NSHC) determination for referencing in licensing amendment applications in the **Federal Register** on June 23, 2004 (69 FR 35067). The licensee affirmed the applicability of the model NSHC determination in its application dated January 11, 2005.

*Basis for proposed no significant hazards consideration determination:* As required by 10 CFR 50.91(a), the licensee has provided its analysis of the issue of no significant hazards consideration, which is presented below:

1. Does the proposed change involve a significant increase in the probability or consequences of an accident previously evaluated?

Response: No.

The proposed change eliminates the Technical Specifications (TSs) reporting requirements to provide a monthly operating report of shutdown experience and operating statistics if the equivalent data is submitted using an industry electronic database. It also eliminates the TS reporting requirement for an annual occupational radiation exposure report, which provides information beyond that specified in NRC regulations. The proposed change involves no changes to plant systems or accident analyses. As such, the change is administrative in nature and does not affect initiators of analyzed events or assumed mitigation of accidents or transients. Therefore, the proposed change does not involve a significant increase in the probability or consequences of an accident previously evaluated.

2. Does the proposed change create the possibility of a new or different kind of accident from any accident previously evaluated?

Response: No.

The proposed change does not involve a physical alteration of the plant, add any new equipment, or require any existing equipment to be operated in a manner different from the present design. Therefore, the proposed change does not create the possibility of a new or different kind of accident from any accident previously evaluated.

3. Does the proposed change involve a significant reduction in a margin of safety?

Response: No.

This is an administrative change to reporting requirements of plant operating information and occupational radiation exposure data, and has no effect on plant equipment, operating practices or safety analyses assumptions. For these reasons, the proposed change does not involve a significant reduction in the margin of safety.

The NRC staff proposes to determine that the amendment request involves no significant hazards consideration.

*Attorney for licensee:* Jeffrie J. Keenan, Esquire, Nuclear Business Unit—N21, P.O. Box 236, Hancocks Bridge, NJ 08038.

*NRC Section Chief:* Darrell J. Roberts.

**PSEG Nuclear LLC, Docket Nos. 50–272 and 50–311, Salem Nuclear Generating Station, Unit Nos. 1 and 2, Salem County, New Jersey**

*Date of amendment request:* February 15, 2005.

*Description of amendment request:* The proposed amendment will revise the Salem, Unit Nos. 1 and 2 Technical Specifications to reflect the deletion of Reactor Coolant System (RCS) volume from design features Section 5.4.2. This design feature information will continue to be maintained in the plant's updated final safety analysis report.

*Basis for proposed no significant hazards consideration determination:* As required by 10 CFR 50.91(a), the licensee has provided its analysis of the issue of no significant hazards consideration, which is presented below:

1. Does the proposed change involve a significant increase in the probability or consequences of an accident previously evaluated.

Response: No.

The proposed change to remove this information from T/S [technical specifications] does not affect any accident initiators or precursors. Elimination of the RCS volume information from the T/S does not change the methods for plant operation or actions to be taken in the event of an accident. The quantity of radioactive material available for release in the event of an accident is not increased.

Barriers to release of radioactive material are not eliminated or otherwise changed. More detailed RCS component and piping volume information is included in the Salem UFSAR [updated final safety analysis report], and changes to that information would be evaluated prior to implementation in accordance with 10 CFR 50.59.

Therefore, the proposed change does not involve a significant increase in the probability or consequences of accidents previously evaluated.

2. Does the proposed amendment create the possibility of a new or different kind of accident from any accident previously evaluated?

Response: No.

The deletion of the RCS volume information from the T/S does not change the methods of plant operation or modify plant systems, structures, or components. No new methods of plant operation are created. As such, the proposed change does not affect any accident initiators or precursors or create new accident initiators or precursors. More detailed and complete RCS component and piping volume information is included in the Salem UFSAR, and any changes to that information would be evaluated prior to implementation in accordance with 10 CFR 50.59.

Therefore, the proposed change does not create the possibility of a new or different kind of accident from any accident previously evaluated.

3. Does the proposed change involve a significant reduction in a margin of safety?

Response: No.

The deletion of the RCS volume information from the T/S does not affect safety limits or limiting safety system settings. Plant operational parameters are not affected. The proposed change does not modify the quantity of radioactive material available for release in the event of an accident. As such, the change will not affect any previous safety margin assumptions or conditions. The actual volume of the RCS is not affected by the change, only the location of the text describing the volume. More detailed and complete RCS component and piping volume information is included in the Salem UFSAR, and any changes to that information would be evaluated prior to implementation in accordance with 10 CFR 50.59.

Therefore, the proposed change does not involve a significant reduction in a margin of safety.

The NRC staff has reviewed the licensee's analysis and, based on this review, it appears that the three standards of 10 CFR 50.92(c) are satisfied. Therefore, the NRC staff proposes to determine that the amendment request involves no significant hazards consideration.

*Attorney for licensee:* Jeffrie J. Keenan, Esquire, Nuclear Business Unit—N21, P.O. Box 236, Hancocks Bridge, NJ 08038.

*NRC Section Chief:* Darrell J. Roberts.

*Sacramento Municipal Utility District, Docket No. 50–312, Rancho Seco Nuclear Generating Station, Sacramento County, California*

*Date of amendment request:* January 24, 2005.

*Description of amendment request:* The proposed license amendment removes unnecessary and obsolete information from the facility license. The proposed changes are editorial and administrative in nature and will remove inappropriate and unnecessary information from the license given that the facility is permanently shutdown and defueled.

*Basis for proposed no significant hazards consideration determination:* As required by 10 CFR 50.91(a), the licensee has provided its analysis of the issue of no significant hazards consideration, which is presented below:

1. The proposed change does not involve a significant increase in the probability or consequences of an accident previously evaluated.

No. The proposed changes are administrative and involve deleting unnecessary and obsolete information from the facility operating license. These changes do not affect possible initiating events for accidents previously evaluated or alter the configuration or operation of the facility. Safety limits, limiting safety system settings, and limiting control systems are no longer applicable to Rancho Seco in the permanently defueled mode, and are therefore not relevant.

The proposed changes do not affect the boundaries used to evaluate compliance with liquid or gaseous effluent limits, and have no impact on plant operations. Therefore, the proposed license amendment does not involve a significant increase in the probability or consequences of an accident previously evaluated.

2. The proposed change does not create the possibility of a new or different accident from any previously evaluated.

No. As described above, the proposed changes are administrative. The safety analysis for the facility remains complete and accurate. There are no physical changes to the facility and the plant conditions for which the design basis accidents have been evaluated are still valid.

The operating procedures and emergency procedures are not affected. The proposed changes do not affect the emergency planning zone, the boundaries used to evaluate compliance with liquid or gaseous effluent limits, and have no impact on plant operations. Consequently, no new failure modes are introduced as the result of the proposed changes. Therefore, the proposed changes will not create the possibility of a new or different kind of accident from any accident previously evaluated.

3. The proposed change does not involve a significant reduction in the margin of safety.

No. As described above, the proposed changes are administrative. There are no changes to the design or operation of the facility. The proposed changes do not affect the emergency planning zone, the boundaries used to evaluate compliance with liquid or gaseous effluent limits, and have no impact on plant operations. Accordingly, neither the design basis nor the accident assumptions in the Defueled Safety Analysis Report (DSAR), nor the Technical Specification Bases are affected. Therefore, the proposed changes do not involve a significant reduction in a margin of safety.

The NRC staff has reviewed the licensee's significant hazards analysis and, based on this review, it appears that the three standards of 10 CFR 50.92(c) are satisfied. Therefore, the NRC staff proposes to determine that the amendment request involves no significant hazards consideration.

*Attorney for licensee:* Arlen Orchard, Esq., General Counsel, Sacramento Municipal Utility District, 6201 S Street, P.O. Box 15830, Sacramento, CA 95817–1899.

*NRC Section Chief:* Claudia M. Craig.

*Tennessee Valley Authority, Docket No. 50–259, Browns Ferry Nuclear Plant, Unit 1, Limestone County, Alabama*

*Date of amendment request:* August 16, 2004 (TS–433).

*Description of amendment request:* The proposed amendment extends the frequency of ''once-per-cycle'' from 18 months to 24 months in several Technical Specification Surveillance Requirements. This change will allow the adoption of a 24-month refueling cycle.

*Basis for proposed no significant hazards consideration determination:* As required by 10 CFR 50.91(a), the licensee has provided its analysis of the issue of no significant hazards consideration, which is presented below:

1. Does the proposed amendment involve a significant increase in the probability or consequences of an accident previously evaluated?

No. The proposed amendment changes the surveillance frequency from 18 months to 24 months for Surveillance Requirements in the Unit 1 Technical Specification[s] that are normally a function of the refueling interval. Under certain circumstances, Surveillance Requirement 3.0.2 would allow a maximum surveillance interval of 30 months for these surveillances. TVA's evaluations have shown that the reliability of protective instrumentation and equipment will be preserved for the maximum allowable surveillance interval. The proposed changes do not involve any change to the design or functional requirements of plant systems and the surveillance test methods will be unchanged. The proposed changes will not give rise to any increase in operating power level, fuel operating limits, or effluents. The proposed change does not affect any accident precursors. In addition, the proposed changes will not significantly increase any radiation levels. Based on the foregoing considerations and the evaluations completed in accordance with the guidance of Generic Letter 91–04, it is concluded that the proposed amendment does not involve a significant increase in the probability or consequences of an accident previously evaluated.

2. Does the proposed amendment create the possibility of a new or different kind of accident from any accident previously evaluated?

No. The proposed amendment does not require a change to the plant design, nor the mode of plant operation. The proposed changes do not create the possibility of any

new failure mechanisms. No new external threats or release pathways are created. Therefore, the implementation of the proposed amendment will not create a possibility for an accident of a new or different type than those previously evaluated.

3. Does the proposed amendment involve a significant reduction in a margin of safety?

No. The proposed amendment changes the surveillance frequency from 18 months to 24 months for Surveillance Requirements in the Unit 1 Technical Specification[s] that are normally a function of the refueling interval. Under certain circumstances, Surveillance Requirement 3.0.2 would allow a maximum surveillance interval of 30 months for these surveillances. Although the proposed Technical Specification changes will result in an increase in the interval between surveillance tests, the impact on system availability is small based on other, more frequent testing or redundant systems or equipment. There is no evidence of any failures that would impact the availability of the systems. This change does not alter the existing setpoints, Technical Specification allowable values or analytical limits. The assumptions in the current safety analyses are not impacted and the proposed amendment does not reduce a margin of safety. Therefore, the proposed license amendment does not involve a significant reduction in the margin of safety.

The NRC staff has reviewed the licensee's analysis and, based on this review, it appears that the three standards of 10 CFR 50.92(c) are satisfied. Therefore, the NRC staff proposes to determine that the amendment request involves no significant hazards consideration.

*Attorney for licensee:* General Counsel, Tennessee Valley Authority, 400 West Summit Hill Drive, ET 11A, Knoxville, Tennessee 37902.

*NRC Section Chief:* Michael L. Marshall, Jr.

*Tennessee Valley Authority, Docket No. 50–259, Browns Ferry Nuclear Plant (BFN), Unit 1, Limestone County, Alabama*

*Date of amendment request:* October 12, 2004 (TS–438).

*Description of amendment request:* The proposed amendment request changes the frequency requirement for Technical Specification Surveillance Requirement (SR) 3.6.1.3.8 by allowing a representative sample (approximately 20 percent) of excess flow check valves (EFCVs) to be tested every 24 months, so that each EFCV is tested once every 120 months. The current SR requires testing of each EFCV every 24 months.

*Basis for proposed no significant hazards consideration determination:* As required by 10 CFR 50.91(a), the licensee has provided its analysis of the issue of no significant hazards consideration, which is presented below:

1. Does the proposed amendment involve a significant increase in the probability or consequences of an accident previously evaluated?

No. The current EFCV frequency requires that each reactor instrument line EFCV be tested every 24 months. The EFCVs are designed to automatically close upon excessive differential pressure including failure of the down stream piping or instrument and will reopen when appropriate. This proposed change will allow a reduction in the number of EFCVs that are verified tested every 24 months, to approximately 20 percent of the valves each cycle. BFN and industry operating experience demonstrates high reliability of these valves. Neither the EFCVs nor their failure is capable of initiating a previously evaluated accident. Therefore, there is no increase in the probability of occurrence of an accident previously evaluated.

The instrument lines going to the Reactor Coolant Pressure boundary with EFCVs installed have flow restricting devices upstream of the EFCV. The consequences of an unisolable failure of an instrument line have been previously evaluated and meet the intent of NRC Safety Guide 11. The offsite exposure has been calculated to be substantially below the limits of 10 CFR 50.67. The total control room Total Effective Dose Equivalent (TEDE) doses are less than the 5 REM limit and the offsite TEDE doses are less than 10% of the 25 REM limit. Additionally, coolant lost from such a break is inconsequential compared to the makeup capabilities of normal and emergency makeup systems. Although not expected to occur as a result of this change, the affects of a postulated failure of an EFCV to isolate and [sic] instrument line break as a result of reduced testing are bounded by TVA analysis.

Therefore, the proposed change does not involve a significant increase in the consequences of an accident previously evaluated.

2. Does the proposed amendment create the possibility of a new or different kind of accident from any accident previously evaluated?

No. The proposed reduction in EFCV test frequency is bounded by previous evaluation of a line rupture. The proposed change does not introduce new equipment, which could create a new or different kind of accident. No new external threats, release pathways, or equipment failure modes are created. Therefore, the implementation of the proposed change will not create a possibility for an accident of a new or different type than those previously evaluated.

3. Does the proposed amendment involve a significant reduction in a margin of safety?

No. The consequences of an unisolable rupture of an instrument line have been previously evaluated and meet the intent NRC Safety Guide 11. The proposed change does not involve a significant reduction in a margin of safety. Therefore, the proposed revised surveillance frequency does not adversely affect the public health and safety, and does not involve any significant safety hazards.

The NRC staff has reviewed the licensee's analysis and, based on this review, it appears that the three standards of 10 CFR 50.92 are satisfied. Therefore, the NRC staff proposes to determine that the amendment request involves no significant hazards consideration.

*Attorney for licensee:* General Counsel, Tennessee Valley Authority, 400 West Summit Hill Drive, ET 11A, Knoxville, Tennessee 37902.

*NRC Section Chief:* Michael L. Marshall, Jr.

## Previously Published Notices of Consideration of Issuance of Amendments To Facility Operating Licenses, Proposed No Significant Hazards Consideration Determination, and Opportunity for a Hearing

The following notices were previously published as separate individual notices. The notice content was the same as above. They were published as individual notices either because time did not allow the Commission to wait for this biweekly notice or because the action involved exigent circumstances. They are repeated here because the biweekly notice lists all amendments issued or proposed to be issued involving no significant hazards consideration.

For details, see the individual notice in the **Federal Register** on the day and page cited. This notice does not extend the notice period of the original notice.

*Dominion Nuclear Connecticut, Inc., Docket No. 50–423, Millstone Power Station, Unit No. 3, New London County, Connecticut*

*Date of amendment request:* February 10, 2005.

*Brief description of amendment request:* The proposed amendment would extend the allowed outage time for the Emergency Generator Load Sequencer (Technical Specification 3/4.3.2, Table 3.3–3, Functional Unit 10) from 6 hours to 12 hours.

*Date of publication of individual notice in* ***Federal Register:*** February 22, 2005 (70 FR 8641).

*Expiration date of individual notice:* March 24, 2005 (public comments) and April 25, 2005 (hearing requests).

*PSEG Nuclear LLC, Docket Nos. 50–272 and 50–311, Salem Nuclear Generating Station, Unit Nos. 1 and 2, Salem County, New Jersey*

*Date of amendment request:* July 23, 2004, and January 6, 2005.

*Brief description of amendment request:* The proposed revision would modify the Technical Specification (TS)

definition of OPERABILITY with respect to requirements for availability of normal and emergency power. Additionally, the proposed revision would modify the required actions for shutdown power TSs.

*Date of publication of individual notice in **Federal Register***: March 1, 2005.

*Expiration date of individual notice:* March 31, 2005 (public comments), and May 2, 2005 (hearing requests).

**Notice of Issuance of Amendments To Facility Operating Licenses**

During the period since publication of the last biweekly notice, the Commission has issued the following amendments. The Commission has determined for each of these amendments that the application complies with the standards and requirements of the Atomic Energy Act of 1954, as amended (the Act), and the Commission's rules and regulations. The Commission has made appropriate findings as required by the Act and the Commission's rules and regulations in 10 CFR chapter I, which are set forth in the license amendment.

Notice of Consideration of Issuance of Amendment to Facility Operating License, Proposed No Significant Hazards Consideration Determination, and Opportunity for A Hearing in connection with these actions was published in the **Federal Register** as indicated.

Unless otherwise indicated, the Commission has determined that these amendments satisfy the criteria for categorical exclusion in accordance with 10 CFR 51.22. Therefore, pursuant to 10 CFR 51.22(b), no environmental impact statement or environmental assessment need be prepared for these amendments. If the Commission has prepared an environmental assessment under the special circumstances provision in 10 CFR 51.12(b) and has made a determination based on that assessment, it is so indicated.

For further details with respect to the action see (1) The applications for amendment, (2) the amendment, and (3) the Commission's related letter, Safety Evaluation and/or Environmental Assessment as indicated. All of these items are available for public inspection at the Commission's Public Document Room (PDR), located at One White Flint North, Public File Area 01F21, 11555 Rockville Pike (first floor), Rockville, Maryland. Publicly available records will be accessible from the Agencywide Documents Access and Management Systems (ADAMS) Public Electronic Reading Room on the internet at the NRC Web site, *http://www.nrc.gov/reading-rm/adams.html.* If you do not have access to ADAMS or if there are problems in accessing the documents located in ADAMS, contact the PDR Reference staff at 1 (800) 397–4209, (301) 415–4737 or by e-mail to *pdr@nrc.gov*.

*AmerGen Energy Company, LLC, Docket No. 50–461, Clinton Power Station, Unit 1, DeWitt County, Illinois*

*Date of application for amendment:* April 30, 2004.

*Brief description of amendment:* The amendment modifies requirements in the Technical Specifications (TS) to adopt the provisions of Industry/TS Task Force (TSTF) change TSTF–359, ''Increased Flexibility in Mode Restraints.''

*Date of issuance:* March 2, 2005.

*Effective date:* As of the date of issuance and shall be implemented within 180 days.

*Amendment No.:* 163.

*Facility Operating License No. NPF–62:* The amendment revised the Technical Specifications.

*Date of initial notice in **Federal Register***: October 26, 2004 (69 FR 62469).

The Commission's related evaluation of the amendment is contained in a Safety Evaluation dated March 2, 2005.

*No significant hazards consideration comments received:* No.

*Carolina Power & Light Company, Docket No. 50–324, Brunswick Steam Electric Plant, Unit 2, Brunswick County, North Carolina*

*Date of application for amendment:* August 16, 2004.

*Brief Description of amendment:* The amendment adds topical report NEDE–32906P–A, ''TRACG Application for Anticipated Operational Occurrences (AOO) Transient Analyses,'' to the documents listed in Technical Specification 5.6.5 describing the approved methodologies used to determine the core operating limits.

*Date of issuance:* March 4, 2005.

*Effective date:* March 4, 2005.

*Amendment No.:* 262.

*Facility Operating License No DPR–62:* Amendment revises the Technical Specifications.

*Date of initial notice in **Federal Register***: October 26, 2004 (69 FR 62470).

The Commission's related evaluation of the amendment is contained in a Safety Evaluation dated March 4, 2005.

*No significant hazards consideration comments received:* No.

*Duke Energy Corporation, et al., Docket Nos. 50–413 and 50–414, Catawba Nuclear Station, Units 1 and 2, York County, South Carolina*

*Date of application for amendments:* May 27, 2004.

*Brief description of amendments:* The amendments revised the Technical Specifications by eliminating the requirements associated with hydrogen recombiners and hydrogen monitors.

*Date of issuance:* March 1, 2005.

*Effective date:* As of the date of issuance and shall be implemented within 60 days from the date of issuance.

*Amendment Nos.:* 219 and 214 .

*Renewed Facility Operating License Nos. NPF–35 and NPF–52:* Amendments revised the Technical Specifications.

*Date of initial notice in **Federal Register***: September 28, 2004 (69 FR 57982).

The Commission's related evaluation of the amendments is contained in a Safety Evaluation dated March 1, 2005.

*No significant hazards consideration comments received:* No.

**Energy Northwest, Docket No. 50–397, Columbia Generating Station, Benton County, Washington**

*Date of application for amendment:* September 27, 2004.

*Brief description of amendment:* The amendment eliminated the technical specification requirements to submit a monthly operating report and an annual occupational radiation exposure report.

*Date of issuance:* March 9, 2005.

*Effective date:* March 9, 2005.

*Amendment No.:* 190.

*Facility Operating License No. NPF–21:* The amendment revised the Technical Specifications.

*Date of initial notice in **Federal Register**:* October 26, 2004 (69 FR 62472).

The Commission's related evaluation of the amendment is contained in a Safety Evaluation dated March 9, 2005.

*No significant hazards consideration comments received:* No.

*Entergy Operations, Inc., Docket No. 50–368, Arkansas Nuclear One Unit No. 2, Pope County, Arkansas*

*Date of application for amendment:* April 15, 2004, as supplemented January 20, 2005.

*Brief Description of amendments:* The licensee has proposed to change the existing reactor coolant system (RCS) cooldown curve to a single 32 effective full power year pressure/temperature limit curve that is applicable for cooldowns at a rate of 100 °F/hour or 50 °F in any half-hour step. The licensee's proposed curve is applicable to RCS

cold-leg temperatures ranging from 50 °F to 560 °F.

*Date of issuance:* March 7, 2005.

*Effective date:* As of the date of issuance to be implemented within 60 days from the date of issuance.

*Amendment No.:* 256.

*Facility Operating License No. NFP–6:* Amendment revised the Technical Specifications.

*Date of initial notice in **Federal Register**:* May 11, 2004 (69 FR 26188). The supplemental letter provided additional information that clarified the application, did not expand the scope of the application as originally noticed, and did not change the staff's original proposed no significant hazards consideration determination as published in the **Federal Register.**

The Commission's related evaluation of the amendments is contained in a Safety Evaluation dated March 7, 2005.

*No significant hazards consideration comments received:* No.

*Entergy Nuclear Operations, Inc., Docket No. 50–293, Pilgrim Nuclear Power Station, Plymouth County, Massachusetts*

*Date of application for amendment:* April 14, 2004.

*Brief description of amendment:* The amendment revised the Pilgrim Nuclear Power Station Technical Specifications (TSs) by adding a new limiting condition for operation (LCO) 3.0.7 to Section 3.0, ''Limiting Condition for Operation (LCO) Applicability,'' a new TS Section 3.14, ''Special Operations,'' and a new LCO 3.14.A, ''Inservice Leak and Hydrostatic Testing Operation,'' to the TSs. These changes permit the licensee to perform inservice hydrostatic testing and system leakage pressure testing of the reactor coolant system at temperatures greater than 212 °F with the reactor shut down.

*Date of issuance:* March 16, 2005.

*Effective Date:* As of the date of issuance, and shall be implemented within 30 days.

*Amendment No.:* 211.

*Facility Operating License No. DPR–35:* The amendment revised the TSs.

*Date of initial notice in **Federal Register**:* December 21, 2004 (69 FR 76489).

The Commission's related evaluation of the amendment is contained in a Safety Evaluation dated March 16, 2005.

*No significant hazards consideration comments received:* No.

*Exelon Generation Company, LLC, Docket Nos. 50–237 and 50–249, Dresden Nuclear Power Station, Units 2 and 3, Grundy County, Illinois*

*Docket Nos. 50–254 and 50–265, Quad Cities Nuclear Power Station, Units 1 and 2, Rock Island County, Illinois*

*Date of application for amendments:* April 30, 2004.

*Brief description of amendments:* The amendments modify Technical Specifications (TS) requirements to adopt the provisions of Industry/TS Task Force (TSTF) change TSTF–359, ''Increased Flexibility in Mode Restraints.''

*Date of issuance:* March 10, 2005.

*Effective date:* As of the date of issuance and shall be implemented within 180 days.

*Amendment Nos.:* 212/204/223/218.

*Facility Operating License Nos. DPR–19, DPR–25, DPR–29 and DPR–30.* The amendments revised the Technical Specifications.

*Date of initial notice in **Federal Register**:* October 26, 2004 (69 FR 62474).

The Commission's related evaluation of the amendments is contained in a Safety Evaluation dated March 10, 2005.

*No significant hazards consideration comments received:* No.

*Exelon Generation Company, LLC, Docket Nos. 50–254 and 50–265, Quad Cities Nuclear Power Station, Units 1 and 2, Rock Island County, Illinois*

*Date of application for amendments:* June 10, 2004, and supplemented July 19 and July 21, 2004 and January 21, 2005.

*Brief description of amendments:* The amendments revise the Quad Cities Nuclear Power Station Technical Specifications to change the allowable value and add Surveillance Requirements for the Main Steam Line Flow-High initiation of Group 1 Primary Containment Isolation System and Control Room Emergency Ventilation System isolation.

*Date of issuance:* March 15, 2005.

*Effective date:* As of the date of issuance and shall be implemented within 90 days for Unit 1 and no later than 90 days after the start of the Unit 2 refueling outage currently scheduled for March 2006 for Unit 2.

*Amendment Nos.:* 224, 219

*Facility Operating License Nos. DPR–29 and DPR–30:* The amendments revise the Technical Specifications.

*Date of initial notice in **Federal Register**:* August 31, 2004 (69 FR 53107). The supplemental letters contained clarifying information and did not change the initial no significant hazards consideration determination and did not expand the scope of the original **Federal Register** notice.

The Commission's related evaluation of the amendments is contained in a Safety Evaluation dated March 15, 2005.

*No significant hazards consideration comments received:* No.

*FirstEnergy Nuclear Operating Company, et al., Docket Nos. 50–334 and 50–412, Beaver Valley Power Station, Unit Nos. 1 and 2 (BVPS–1 and 2), Beaver County, Pennsylvania*

*Date of amendment request:* June 1, 2004, as supplemented July 23, 2004, and February 18, 2005.

*Description of amendment request:* These amendments lowered the BVPS–2 overpressure protection system enable temperature, allowed one inoperable residual heat removal loop during surveillance testing, removed the BVPS–1 list of figures and list of tables from the Index of the BVPS–1 Technical Specifications (TSs), and made minor changes to achieve consistency between units and with the Standard TSs for Westinghouse plants and with some TS Task Force changes.

*Date of issuance:* March 11, 2004.

*Effective date:* As of the date of issuance, to be implemented within 30 days.

*Amendment Nos.:* 265 and 146.

*Facility Operating License Nos. DPR–66 and NPF–73:* Amendments revised the Technical Specifications.

*Public comments requested as to proposed no significant hazards consideration (NSHC):* Yes. February 25, 2005 (70 FR 9391). The notice provided an opportunity to submit comments on the Commission's proposed NSHC determination by March 11, 2005. No comments have been received. The notice also provided an opportunity to request a hearing by April 26, 2005, but indicated that if the Commission makes a final NSHC determination, any such hearing would take place after issuance of the amendment.

The Commission's related evaluation of the amendment, finding of exigent circumstances, state consultation, and final NSHC determination are contained in a safety evaluation dated March 11, 2005.

*Attorney for licensee:* Mary O'Reilly, FirstEnergy Nuclear Operating Company, FirstEnergy Corporation, 76 South Main Street, Akron, OH 44308.

*Indiana Michigan Power Company, Docket Nos. 50–315 and 50–316, Donald C. Cook Nuclear Plant, Units 1 and 2, Berrien County, Michigan*

*Date of application for amendments:* April 13, 2004.

*Brief description of amendments:* The amendments change the design basis as described in the Updated Final Safety Analysis Report to allow the use in control rod drive missile shield structural calculations of a reinforcing bar (rebar) yield strength value based on measured material properties, as

documented in the licensee rebar acceptance tests.

*Date of issuance:* March 11, 2005.

*Effective date:* As of the date of issuance and shall be implemented within 45 days.

*Amendment Nos.:* 286, 268.

*Facility Operating License Nos. DPR–58 and DPR–74:* Amendments revised the design basis.

Date *of initial notice in* ***Federal Register***: October 12, 2004 (69 FR 60682).

The Commission's related evaluation of the amendments is contained in a Safety Evaluation dated March 11, 2005.

*No significant hazards consideration comments received:* No.

*Omaha Public Power District, Docket No. 50–285, Fort Calhoun Station, Unit No. 1, Washington County, Nebraska*

*Date of amendment request:* September 7, 2004.

*Brief description of amendment:* The amendment revised Technical Specification (TS) 5.9.5, ''Core Operating Limits Report,'' to be consistent with Specification 5.6.5 of NUREG–1432, ''Standard Technical Specifications Combustion Engineering Plants.'' In addition, the list of core reload analysis methodologies contained in TS 5.9.5b used to determine the core operating limits, has been updated. Many of these references were moved to the Omaha Public Power District core reload analysis methodology documents OPPD–NA–8301, 8302, and 8303, which are also listed in TS 5.9.5b. However, OPPD–NA–8302 has been revised to incorporate use of the code CASMO–4 in lieu of the previously approved CASMO–3 code.

*Date of issuance:* March 11, 2005.

*Effective date:* March 11, 2005, and shall be implemented within 90 days from the date of issuance.

*Amendment No.:* 233.

*Renewed Facility Operating License No. DPR–40:* The amendment revised the Technical Specifications.

*Date of initial notice in* ***Federal Register***: October 12, 2004 (69 FR 60683)

The Commission's related evaluation of the amendment is contained in a safety evaluation dated March 11, 2005.

*No significant hazards consideration comments received:* No.

*Southern Nuclear Operating Company, Inc., Docket Nos. 50–348 and 50–364, Joseph M. Farley Nuclear Plant, Units 1 and 2, Houston County, Alabama*

*Date of amendments request:* May 21, 2004.

*Brief description of amendments:* The amendments revised the Technical Specifications to delete the requirements to maintain hydrogen recombiners and hydrogen analyzers.

*Date of issuance:* March 8, 2005.

*Effective date:* As of the date of issuance and shall be implemented within 60 days.

*Amendment Nos.:* 167 and 159.

*Facility Operating License Nos. NPF–2 and NPF–8:* Amendments revise the Technical Specifications.

*Date of initial notice in* ***Federal Register***: September 28, 2004 (69 FR 57994)

The Commission's related evaluation of the amendments is contained in a Safety Evaluation dated March 8, 2005.

*No significant hazards consideration comments received:* No

*Southern Nuclear Operating Company, Inc., Docket Nos. 50–348 and 50–364, Joseph M. Farley Nuclear Plant, Units 1 and 2, Houston County, Alabama*

*Date of amendments request:* July 28, 2004.

*Brief description of amendments:* The amendments delete the technical specification requirements to submit monthly operating reports and annual occupational radiation exposure reports.

*Date of issuance:* March 8, 2005.

*Effective date:* As of the date of issuance and shall be implemented within 60 days from the date of issuance.

*Amendment Nos.:* 168 and 160.

*Facility Operating License Nos. NPF–2 and NPF–8:* Amendments revise the Technical Specifications.

*Date of initial notice in* ***Federal Register***: October 12, 2004 (69 FR 60686)

The Commission's related evaluation of the amendments is contained in a Safety Evaluation dated March 8, 2005.

*No significant hazards consideration comments received:* No.

*Southern Nuclear Operating Company, Inc., Georgia Power Company, Oglethorpe Power Corporation, Municipal Electric Authority of Georgia, City of Dalton, Georgia, Docket Nos. 50–321 and 50–366, Edwin I. Hatch Nuclear Plant, Units 1 and 2, Appling County, Georgia*

*Date of application for amendments:* July 28, 2004.

*Brief description of amendments:* The amendments revised the Technical Specifications by deleting the requirements for monthly operating reports and occupational radiation exposure reports.

*Date of issuance:* March 8, 2005.

*Effective date:* As of the date of issuance and shall be implemented within 60 days from the date of issuance.

*Amendment Nos.:* 245 and 189.

*Renewed Facility Operating License Nos. DPR–57 and NPF–5:* Amendments revised the Technical Specifications.

*Date of initial notice in* ***Federal Register***: October 12, 2004 (69 FR 60686).

The Commission's related evaluation of the amendments is contained in a Safety Evaluation dated March 8, 2005.

*No significant hazards consideration comments received:* No.

*Southern Nuclear Operating Company, Inc., et al., Docket Nos. 50–424 and 50–425, Vogtle Electric Generating Plant, Units 1 and 2, Burke County, Georgia*

*Date of application for amendments:* October 13, 2003, as supplemented by letters dated April 12 and October 28, 2004.

*Brief description of amendments:* The amendments revised the Technical Specifications (TS) limiting conditions for operation 3.8.4, 3.8.5, and 3.8.6, on direct current sources, operating and shutdown, and battery cell parameters. The proposed amendments creates TS 5.5.19, for a battery monitoring and maintenance program. The TS Bases are revised to be consistent with these changes. The proposed amendments are based on Technical Specification Task Force (TSTF) Traveler, TSTF–360, Revision 1.

*Date of issuance:* March 2, 2005.

*Effective date:* As of the date of issuance and shall be implemented within 30 days from the date of issuance.

*Amendment Nos.:* 133 and 112.

*Facility Operating License Nos. NPF–68 and NPF–81:* Amendments revised the Technical Specifications.

*Date of initial notice in* ***Federal Register***: January 20, 2004 (69 FR 2746). The supplements dated April 12 and October 28, 2004, provided clarifying information that did not change the scope of the October 13, 2003, application nor the initial proposed no significant hazards consideration determination.

The Commission's related evaluation of the amendments is contained in a Safety Evaluation dated March 2, 2005.

*No significant hazards consideration comments received:* No.

*Southern Nuclear Operating Company, Inc., Docket Nos. 50–424 and 50–425, Vogtle Electric Generating Plant, Units 1 and 2, Burke County, Georgia*

*Date of application for amendments:* May 21, 2004.

*Brief description of amendments:* The amendments revised the Technical Specifications to delete the requirements to maintain hydrogen recombiners and change requirements for hydrogen analyzers.

*Date of issuance:* March 7, 2005.

*Effective date:* As of the date of issuance and shall be implemented within 30 days from the date of issuance.

*Amendment Nos.:* 134 and 113.

*Facility Operating License Nos. NPF–68 and NPF–81:* Amendments revised the Technical Specifications.

*Date of initial notice in **Federal Register**:* September 28, 2004 (69 FR 57995).

The Commission's related evaluation of the amendments is contained in a Safety Evaluation dated March 7, 2005.

*No significant hazards consideration comments received:* No.

*Southern Nuclear Operating Company, Inc., et al., Docket Nos. 50–424 and 50–425, Vogtle Electric Generating Plant, Units 1 and 2, Burke County, Georgia*

*Date of application for amendments:* July 28, 2004.

*Brief description of amendments:* The amendments delete the technical specification requirements to submit monthly operating reports and annual occupational radiation exposure reports.

*Date of issuance:* March 8, 2005.

*Effective date:* As of the date of issuance and shall be implemented within 60 days from the date of issuance.

*Amendment Nos.:* 135 and 114.

*Facility Operating License Nos. NPF–68 and NPF–81:* Amendments revised the Technical Specifications.

*Date of initial notice in **Federal Register**:* October 12, 2004 (69 FR 60686)

The Commission's related evaluation of the amendments is contained in a Safety Evaluation dated March 8, 2005.

*No significant hazards consideration comments received:* No.

*STP Nuclear Operating Company, Docket Nos. 50–498 and 50–499, South Texas Project, Units 1 and 2, Matagorda County, Texas*

*Date of amendment request:* May 13, 2003, as supplemented by letters dated October 6, 2004, November 30, 2004, and January 20, 2005.

*Brief description of amendments:* The amendments approve revisions to the RETRAN–02 methodology that is used to evaluate certain design basis transients and accidents.

*Date of issuance:* March 7, 2005.

*Effective date:* As of the date of issuance and shall be implemented within 30 days of issuance.

*Amendment Nos.:* Unit 1—171; Unit 2—159.

*Facility Operating License Nos. NPF–76 and NPF–80:* The amendments revised the RETRAN–02 methodology.

*Date of initial notice in **Federal Register**:* November 12, 2003 (68 FR 64138). The supplements dated October 6, 2004, November 30, 2004, and January 20, 2005, provided additional information that clarified the application, did not expand the scope of the application as originally noticed, and did not change the staff's original proposed no significant hazards consideration determination as published in the **Federal Register.**

The Commission's related evaluation of the amendments is contained in a Safety Evaluation dated March 7, 2005.

*No significant hazards consideration comments received:* No.

*Tennessee Valley Authority, Docket Nos. 50–260 and 50–296, Browns Ferry Nuclear Plant, Units 2 and 3, Limestone County, Alabama*

*Date of application for amendments:* July 8, 2004, as supplemented in a letter dated November 24, 2004 (TS–448).

*Brief description of amendments:* The amendments modify Technical Specification Section 5.5.12 ''Primary Containment Leakage Rate Testing Program'' to allow a one-time 5-year extension to the 10-year frequency of the performance-based leakage rate testing program for Type A tests. The first Unit 2 Type A test performed after the November 6, 1994, Type A test shall be performed no later than November 6, 2009, and the first Unit 3 Type A test performed after the October 10, 1998, Type A test shall be performed no later than October 10, 2013. The local leakage rate tests (Type B and Type C), including their schedules, are not affected by this request.

*Date of issuance:* March 9, 2005.

*Effective date:* As of date of issuance and shall be implemented within 30 days.

*Amendment Nos.:* 293 and 252.

*Facility Operating License Nos. DPR–52 and DPR–68:* Amendments revise the Technical Specifications.

*Date of initial notice in **Federal Register**:* August 3, 2004 (69 FR 46592).

The Commission's related evaluation of the amendment is contained in a Safety Evaluation dated March 9, 2005.

*No significant hazards consideration comments received:* No.

*Tennessee Valley Authority, Docket Nos. 50–327 and 50–328, Sequoyah Nuclear Plant, Units 1 and 2, Hamilton County, Tennessee*

*Date of application for amendments:* August 18, 2004.

*Brief description of amendments:* The amendments revised Technical Specification (TS) 3/4.4.2, ''Safety Valves—Shutdown,'' TS 3/4.4.3, ''Safety and Relief Valves—Operating,'' and TS 3/4.5.2, ''ECCS Subsystems—$T_{avg}$ Greater Than or Equal to 350°F.'' TS 3/4.4.2 is eliminated because overpressure protection of the reactor coolant system does not rely upon the pressurizer safety valves during plant operation in Modes 4 and 5. TS 3/4.4.3 is revised to remove redundancy and add improvements consistent with NUREG–1431, Revision 3, ''Standard Technical Specifications for Westinghouse Plants.'' TS 3/4.5.2 is revised by adding a note to the Limiting Condition for Operation (LCO) supporting transition to and from LCO 3.4.12, ''Low Temperature Overpressure Protection (LTOP) System.''

*Date of issuance:* March 9, 2005.

*Effective date:* As of the date of issuance. Unit 1 shall be implemented by May 15, 2005, and Unit 2 shall be implemented by completion of the 2005 Cycle 13 Refueling Outage.

*Amendment Nos.:* 299 and 288.

*Facility Operating License Nos. DPR–77 and DPR–79:* Amendments revised the TSs.

*Date of initial notice in **Federal Register**:* November 9, 2004 (69 FR 64991)

The Commission's related evaluation of the amendments is contained in a Safety Evaluation dated March 9, 2005.

*No significant hazards consideration comments received:* No.

*Tennessee Valley Authority, Docket No. 50–390, Watts Bar Nuclear Plant, Unit 1, Rhea County, Tennessee*

*Date of application for amendment:* September 15, 2004.

*Brief description of amendment:* The amendment modifies technical specification (TS) requirements for mode change limitations in Limiting Condition for Operation 3.0.4 and Surveillance Requirement 3.0.4 consistent with Industry/TS Task Force (TSTF) Standard Technical Specification Change Traveler, TSTF–359, Revision 9, ''Increased Flexibility in Mode Restraints.'' In addition, the amendment modifies TS requirements consistent with TSTF–153, Revision 0, ''Clarify Exception Notes to be Consistent with the Requirement Being Excepted,'' in part, and TSTF–285, Revision 1, ''Charging Pump Swap LTOP (Low Temperature-Overpressurization) Allowance.''

*Date of issuance:* March 3, 2005.

*Effective date:* As of the date of issuance and shall be implemented within 60 days of issuance.

*Amendment No.:* 55.

*Facility Operating License No. NPF–90:* Amendment revises the TSs.

*Date of initial notice in **Federal Register**:* January 18, 2005 (70 FR 2901) and February 1, 2005 (70 FR 5226).

The Commission's related evaluation of the amendment is contained in a Safety Evaluation dated March 3, 2005.

*No significant hazards consideration comments received:* No.

*Tennessee Valley Authority, Docket No. 50–390, Watts Bar Nuclear Plant, Unit 1, Rhea County, Tennessee*

*Date of application for amendment:* September 8, 2003, as supplemented by letter dated September 11, 2003.

*Brief description of amendment:* The amendment revised the Updated Final Safety Analysis Report (UFSAR) by modifying the design and licensing basis to increase the postulated primary-to-secondary leakage in the faulted steam generator following a main steamline break accident from 1 to 3 gallons per minute.

*Date of issuance:* March 10, 2005.

*Effective date:* As of the date of issuance and shall be implemented as part of the next UFSAR update made in accordance with 10 CFR 50.71(e).

*Amendment No.:* 56

*Facility Operating License No. NPF–90:* Amendment revised the UFSAR.

*Date of initial notice* in ***Federal Register***: September 18, 2003 (68 FR 54745).

The Commission's related evaluation of the amendment is contained in a Safety Evaluation dated March 10, 2005.

*No significant hazards consideration comments received:* No.

*Union Electric Company, Docket No. 50–483, Callaway Plant, Unit 1, Callaway County, Missouri*

*Date of application for amendment:* October 27, 2004.

*Brief description of amendment:* The amendment revised the Technical Specifications (TSs) by eliminating the requirements in TSs 5.6.1 and 5.6.4 to submit monthly operating reports and annual occupational radiation exposure reports.

*Date of issuance:* March 8, 2005.

Effective date: March 8, 2005, and shall be implemented within 90 days of the date of issuance.

*Amendment No.:* 166.

*Facility Operating License No. NPF–30:* The amendment revised the Technical Specifications.

*Date of initial notice in* ***Federal Register***: January 4, 2005 (70 FR 406).

The Commission's related evaluation of the amendment is contained in a Safety Evaluation dated March 8, 2005.

*No significant hazards consideration comments received:* No.

*Wolf Creek Nuclear Operating Corporation, Docket No. 50–482, Wolf Creek Generating Station, Coffey County, Kansas*

*Date of amendment request:* July 22, 2004.

*Brief description of amendment:* The amendment revises Technical Specification Figure 3.5.5–1, ''Seal Injection Flow Limits,'' to reflect flow limits that allow a higher seal injection flow for a given differential pressure between the charging pump discharge header and the reactor coolant system.

*Date of issuance:* March 16, 2005.

*Effective date:* March 16, 2005, and shall be implemented prior to startup from Refueling Outage 14.

*Amendment No.:* 160.

*Facility Operating License No. NPF–42:* The amendment revises the Technical Specifications.

*Date of initial notice in* ***Federal Register***: August 31, 2004 (69 FR 53115).

The Commission's related evaluation of the amendment is contained in a Safety Evaluation dated March 16, 2005.

*No significant hazards consideration comments received:* No.

**Notice of Issuance of Amendments To Facility Operating Licenses and Final Determination of No Significant Hazards Consideration and Opportunity for a Hearing (Exigent Public Announcement or Emergency Circumstances)**

During the period since publication of the last biweekly notice, the Commission has issued the following amendments. The Commission has determined for each of these amendments that the application for the amendment complies with the standards and requirements of the Atomic Energy Act of 1954, as amended (the Act), and the Commission's rules and regulations. The Commission has made appropriate findings as required by the Act and the Commission's rules and regulations in 10 CFR chapter I, which are set forth in the license amendment.

Because of exigent or emergency circumstances associated with the date the amendment was needed, there was not time for the Commission to publish, for public comment before issuance, its usual Notice of Consideration of Issuance of Amendment, Proposed No Significant Hazards Consideration Determination, and Opportunity for a Hearing.

For exigent circumstances, the Commission has either issued a **Federal Register** notice providing opportunity for public comment or has used local media to provide notice to the public in the area surrounding a licensee's facility of the licensee's application and of the Commission's proposed determination of no significant hazards consideration. The Commission has provided a reasonable opportunity for the public to comment, using its best efforts to make available to the public means of communication for the public to respond quickly, and in the case of telephone comments, the comments have been recorded or transcribed as appropriate and the licensee has been informed of the public comments.

In circumstances where failure to act in a timely way would have resulted, for example, in derating or shutdown of a nuclear power plant or in prevention of either resumption of operation or of increase in power output up to the plant's licensed power level, the Commission may not have had an opportunity to provide for public comment on its no significant hazards consideration determination. In such case, the license amendment has been issued without opportunity for comment. If there has been some time for public comment but less than 30 days, the Commission may provide an opportunity for public comment. If comments have been requested, it is so stated. In either event, the State has been consulted by telephone whenever possible.

Under its regulations, the Commission may issue and make an amendment immediately effective, notwithstanding the pendency before it of a request for a hearing from any person, in advance of the holding and completion of any required hearing, where it has determined that no significant hazards consideration is involved.

The Commission has applied the standards of 10 CFR 50.92 and has made a final determination that the amendment involves no significant hazards consideration. The basis for this determination is contained in the documents related to this action. Accordingly, the amendments have been issued and made effective as indicated.

Unless otherwise indicated, the Commission has determined that these amendments satisfy the criteria for categorical exclusion in accordance with 10 CFR 51.22. Therefore, pursuant to 10 CFR 51.22(b), no environmental impact statement or environmental assessment need be prepared for these amendments. If the Commission has prepared an environmental assessment under the special circumstances provision in 10 CFR 51.12(b) and has made a determination based on that assessment, it is so indicated.

For further details with respect to the action see (1) the application for amendment, (2) the amendment to Facility Operating License, and (3) the Commission's related letter, Safety Evaluation and/or Environmental Assessment, as indicated. All of these items are available for public inspection

at the Commission's Public Document Room (PDR), located at One White Flint North, Public File Area 01F21, 11555 Rockville Pike (first floor), Rockville, Maryland. Publicly available records will be accessible from the Agencywide Documents Access and Management System's (ADAMS) Public Electronic Reading Room on the Internet at the NRC Web site, *http://www.nrc.gov/reading-rm/adams.html.* If you do not have access to ADAMS or if there are problems in accessing the documents located in ADAMS, contact the PDR Reference staff at 1 (800) 397–4209, (301) 415–4737 or by e-mail to *pdr@nrc.gov.*

The Commission is also offering an opportunity for a hearing with respect to the issuance of the amendment. Within 60 days after the date of publication of this notice, the licensee may file a request for a hearing with respect to issuance of the amendment to the subject facility operating license and any person whose interest may be affected by this proceeding and who wishes to participate as a party in the proceeding must file a written request for a hearing and a petition for leave to intervene. Requests for a hearing and a petition for leave to intervene shall be filed in accordance with the Commission's ''Rules of Practice for Domestic Licensing Proceedings'' in 10 CFR part 2. Interested persons should consult a current copy of 10 CFR 2.309, which is available at the Commission's PDR, located at One White Flint North, Public File Area 01F21, 11555 Rockville Pike (first floor), Rockville, Maryland, and electronically on the Internet at the NRC Web site, *http://www.nrc.gov/reading-rm/doc-collections/cfr/.* If there are problems in accessing the document, contact the PDR Reference staff at 1 (800) 397–4209, (301) 415–4737, or by e-mail to *pdr@nrc.gov.* If a request for a hearing or petition for leave to intervene is filed by the above date, the Commission or a presiding officer designated by the Commission or by the Chief Administrative Judge of the Atomic Safety and Licensing Board Panel, will rule on the request and/or petition; and the Secretary or the Chief Administrative Judge of the Atomic Safety and Licensing Board will issue a notice of a hearing or an appropriate order.

As required by 10 CFR 2.309, a petition for leave to intervene shall set forth with particularity the interest of the petitioner in the proceeding, and how that interest may be affected by the results of the proceeding. The petition should specifically explain the reasons why intervention should be permitted with particular reference to the following general requirements: (1) The name, address, and telephone number of the requestor or petitioner; (2) the nature of the requestor's/petitioner's right under the Act to be made a party to the proceeding; (3) the nature and extent of the requestor's/petitioner's property, financial, or other interest in the proceeding; and (4) the possible effect of any decision or order which may be entered in the proceeding on the requestor's/petitioner's interest. The petition must also identify the specific contentions which the petitioner/requestor seeks to have litigated at the proceeding.

Each contention must consist of a specific statement of the issue of law or fact to be raised or controverted. In addition, the petitioner/requestor shall provide a brief explanation of the bases for the contention and a concise statement of the alleged facts or expert opinion which support the contention and on which the petitioner intends to rely in proving the contention at the hearing. The petitioner must also provide references to those specific sources and documents of which the petitioner is aware and on which the petitioner intends to rely to establish those facts or expert opinion. The petition must include sufficient information to show that a genuine dispute exists with the applicant on a material issue of law or fact.[1] Contentions shall be limited to matters within the scope of the amendment under consideration. The contention must be one which, if proven, would entitle the petitioner to relief. A petitioner/requestor who fails to satisfy these requirements with respect to at least one contention will not be permitted to participate as a party.

Each contention shall be given a separate numeric or alpha designation within one of the following groups:

1. Technical—primarily concerns/issues relating to technical and/or health and safety matters discussed or referenced in the applications.

2. Environmental—primarily concerns/issues relating to matters discussed or referenced in the environmental analysis for the applications.

3. Miscellaneous—does not fall into one of the categories outlined above.

As specified in 10 CFR 2.309, if two or more petitioners/requestors seek to co-sponsor a contention, the petitioners/requestors shall jointly designate a representative who shall have the authority to act for the petitioners/requestors with respect to that contention. If a petitioner/requestor seeks to adopt the contention of another sponsoring petitioner/requestor, the petitioner/requestor who seeks to adopt the contention must either agree that the sponsoring petitioner/requestor shall act as the representative with respect to that contention, or jointly designate with the sponsoring petitioner/requestor a representative who shall have the authority to act for the petitioners/requestors with respect to that contention.

Those permitted to intervene become parties to the proceeding, subject to any limitations in the order granting leave to intervene, and have the opportunity to participate fully in the conduct of the hearing. Since the Commission has made a final determination that the amendment involves no significant hazards consideration, if a hearing is requested, it will not stay the effectiveness of the amendment. Any hearing held would take place while the amendment is in effect.

A request for a hearing or a petition for leave to intervene must be filed by: (1) First class mail addressed to the Office of the Secretary of the Commission, U.S. Nuclear Regulatory Commission, Washington, DC 20555–0001, Attention: Rulemaking and Adjudications Staff; (2) courier, express mail, and expedited delivery services: Office of the Secretary, Sixteenth Floor, One White Flint North, 11555 Rockville Pike, Rockville, Maryland 20852, Attention: Rulemaking and Adjudications Staff; (3) e-mail addressed to the Office of the Secretary, U.S. Nuclear Regulatory Commission, *HearingDocket@nrc.gov*; or (4) facsimile transmission addressed to the Office of the Secretary, U.S. Nuclear Regulatory Commission, Washington, DC, Attention: Rulemakings and Adjudications Staff at (301) 415–1101, verification number is (301) 415–1966. A copy of the request for hearing and petition for leave to intervene should also be sent to the Office of the General Counsel, U.S. Nuclear Regulatory Commission, Washington, DC 20555–0001, and it is requested that copies be transmitted either by means of facsimile transmission to (301) 415–3725 or by e-mail to *OGCMailCenter@nrc.gov.* A copy of the request for hearing and petition for leave to intervene should also be sent to the attorney for the licensee.

Nontimely requests and/or petitions and contentions will not be entertained absent a determination by the Commission or the presiding officer or

[1] To the extent that the applications contain attachments and supporting documents that are not publicly available because they are asserted to contain safeguards or proprietary information, petitioners desiring access to this information should contact the applicant or applicant's counsel and discuss the need for a protective order.

the Atomic Safety and Licensing Board that the petition, request and/or the contentions should be granted based on a balancing of the factors specified in 10 CFR 2.309(a)(1)(I)–(viii).

*Duke Energy Corporation, et al., Docket No. 50–414, Catawba Nuclear Station Unit 2, York County, South Carolina*

*Date of amendment request:* February 5, 2005, as supplemented by letter dated February 7, 2005.

*Description of amendment request:* The amendment revises the system bypass leakage acceptance criterion for the charcoal adsorber in the 2B Auxiliary Building Filtered Ventilation Exhaust System train as listed in Technical Specification 5.5.11, ''Ventilation Filter Testing Program.''

*Date of issuance:* February 7, 2005.

*Effective date:* As of the date of issuance and shall be implemented within 30 days from the date of issuance.

*Amendment No.:* 213.

*Renewed Facility Operating License No. NPF–52:* Amendments revised the Technical Specifications.

*Public comments requested as to proposed no significant hazards consideration (NSHC):*

No.

The Commission's related evaluation of the amendment, finding of emergency circumstances, state consultation, and final NSHC determination are contained in a safety evaluation dated February 7, 2005.

*Attorney for licensee:* Ms. Anne Cottingham, Esquire.

*NRC Section Chief:* John A. Nakoski.

The Commission's related evaluation of the amendment, finding of emergency circumstances, state consultation, and final NSHC determination are contained in a safety evaluation dated February 7, 2005.

*Attorney for licensee:* Ms. Anne Cottingham, Esquire.

*NRC Section Chief:* John A. Nakoski.

Dated at Rockville, Maryland, this 21st day of March 2005.

For the Nuclear Regulatory Commission.

**Ledyard B. Marsh,**

*Director, Division of Licensing Project Management, Office of Nuclear Reactor Regulation.*

[FR Doc. E5–1343 Filed 3–28–05; 8:45 am]

BILLING CODE 7590–01–P

## SECURITIES AND EXCHANGE COMMISSION

### Issuer Delisting; Notice of Application of Hythiam, Inc. to Withdraw its Common Stock, $.0001 par value, From Listing and Registration on the American Stock Exchange LLC File No. 1–31932

March 22, 2005.

On March 7, 2005, Hythiam, Inc., a Delaware corporation (''Issuer''), filed an application with the Securities and Exchange Commission (''Commission''), pursuant to section 12(d) of the Securities Exchange Act of 1934 (''Act'')[1] and Rule 12d2–2(d) thereunder,[2] to withdraw its common stock, $.0001 par value (''Security''), from listing and registration on the American Stock Exchange LLC (''Amex'').

On March 4, 2005, the Board of Directors (''Board'') of the Issuer unanimously approved resolutions to withdraw the Security from listing and registration on Amex and to list the Security on the Nasdaq National Market (''Nasdaq''). The Board determined that it is in the best interest of the Issuer and its stockholders to withdraw the Security from listing on the Amex and to list the Security on Nasdaq. The Board believed that listing the Security on Nasdaq will enable the Issuer and its stockholders to benefit from increased visibility to investors, an open market structure, and an efficient electronic trading platform. In addition, the Board stated that the Issuer has met the initial listing requirements of Nasdaq, and the application for listing the Security on Nasdaq has been approved.

The Issuer stated that it has met the requirements of Amex's rules governing an issuer's voluntary withdrawal of a security from listing and registration by complying with all the applicable laws in effect in Delaware, in which it is incorporated.

The Issuer's application relates solely to the withdrawal of the Security from listing on the Amex and from registration under section 12(b) of the Act,[3] and shall not affect its obligation to be registered under section 12(g) of the Act.[4]

Any interested person may, on or before April 15, 2005, comment on the facts bearing upon whether the application has been made in accordance with the rules of the Amex, and what terms, if any, should be imposed by the Commission for the protection of investors. All comment letters may be submitted by either of the following methods:

*Electronic Comments*

- Send an e-mail to *rule-comments@sec.gov.* Please include the File Number 1–31932 or;

*Paper Comments*

- Send paper comments in triplicate to Jonathan G. Katz, Secretary, Securities and Exchange Commission, 450 Fifth Street, NW., Washington, DC 20549–0609.

All submissions should refer to File Number 1–31932. This file number should be included on the subject line if e-mail is used. To help us process and review your comments more efficiently, please use only one method. The Commission will post all comments on the Commission's Internet Web site (*http://www.sec.gov/rules/delist.shtml*). Comments are also available for public inspection and copying in the Commission's Public Reference Room. All comments received will be posted without change; we do not edit personal identifying information from submissions. You should submit only information that you wish to make available publicly.

The Commission, based on the information submitted to it, will issue an order granting the application after the date mentioned above, unless the Commission determines to order a hearing on the matter.

For the Commission, by the Division of Market Regulation, pursuant to delegated authority.[5]

**Jonathan G. Katz,**

*Secretary.*

[FR Doc. E5–1377 Filed 3–28–05; 8:45 am]

BILLING CODE 8010–01–P

[1] 15 U.S.C. 78*l*(d).

[2] 17 CFR 240.12d2–2(d).

[3] 15 U.S.C. 78*l*(b).

[4] 15 U.S.C. 78*l*(g).

[5] 17 CFR 200.30–3(a)(1).

## SECURITIES AND EXCHANGE COMMISSION

**[Release No. 34–51418; File No. SR–BSE–2005–01]**

### Self-Regulatory Organizations; Notice of Filing of Proposed Rule Change, and Amendment No. 1 Thereto, by the Boston Stock Exchange, Inc. Relating to the Price Improvement Period Under the Rules of the Boston Options Exchange Facility

March 23, 2005.

Pursuant to section 19(b)(1) of the Securities Exchange Act of 1934

(''Act''),[1] and Rule 19b–4 thereunder,[2] notice is hereby given that on January 4, 2005, the Boston Stock Exchange, Inc. (''BSE'' or ''Exchange'') filed with the Securities and Exchange Commission (''Commission'') the proposed rule change as described in items I, II, and III below, which items have been prepared by the BSE. On March 22, 2005, the BSE filed Amendment No. 1 to the proposed rule change.[3] The Commission is publishing this notice to solicit comments on the proposed rule change, as amended, from interested persons.

**I. Self-Regulatory Organization's Statement of the Terms of Substance of the Proposed Rule Change**

The BSE proposes to modify the rules of the Boston Options Exchange Facility (''BOX'') that relate to the Price Improvement Period (the ''PIP'') to eliminate certain restrictions on the ability of Order Flow Providers, Market Makers, and Public Customers (as defined in sections 1(46), 1(32), and 1(50), respectively, of Chapter I of the BOX Rules) to participate in the PIP.

Below is the amended text of the proposed rule change. Proposed new language is in *italics*; proposed deletions are in [brackets].

* * * * *

**Rules of the Boston Stock Exchange**

**Rules of the Boston Options Exchange Facility**

*Trading of Options Contracts on BOX*

Chapter V

Sec. 18 The Price Improvement Period (''PIP'')

(a) through (d) No change.

(e) Options Participants, both OFPs and Market Makers, executing agency orders may designate BOX-Top and marketable limit Customer Orders for price improvement and submission to the PIP. Customer Orders designated for the PIP shall be submitted to BOX with a matching contra order, the ''Primary Improvement Order'', equal to the full size of the Customer Order. The Primary Improvement Order shall be on the opposite side of the market than that of the Customer Order and represent a higher bid (lower offer) than that of the National Best Bid Offer (NBBO) at the time of the commencement of the PIP. BOX will not permit a PIP to commence unless at least three (3) Market Makers were quoting in the relevant series at the time an Options Participant submits a Primary Improvement Order to initiate a PIP. BOX will commence a PIP by broadcasting a message to Participants that (1) states that a Primary Improvement Order has been processed; (2) contains information concerning series, size, price and side of market, and; (3) states when the PIP will conclude (''PIP Broadcast'').

i. The PIP shall be 3 seconds, commencing upon the dissemination of the PIP Broadcast. [During the PIP, Market Makers may submit competing orders, ''Improvement Orders'', for only those classes within their appointment. Unless assigned as a Market Maker in the appropriate class, Options Participants may submit Improvement Orders only in a PIP for which, (1) they have submitted the Primary Improvement Order; (2) they hold a Customer PIP Order, (''CPO''), in accordance with the requirements of Paragraph (g) of this Section 18; or (3) they meet the PIP Proprietary Order (''PPO'') requirements of Paragraph (h) of this Section 18.] *During the PIP, Order Flow Providers and Market Makers (except for the Order Flow Provider or Market Maker that submits the relevant Primary Improvement Order) may submit competing orders, ''Improvement Orders,'' for their own account. Order Flow Providers may submit Improvement Orders for the account of a Public Customer under any type of instruction they wish to accept. Order Flow Providers may also provide access to the PIP on behalf of a Public Customer in the form of a CPO (as set forth in subparagraph (g) below). An Improvement Order submitted to the PIP for the account of a Public Customer, including a CPO, must be identified as a Public Customer Order.* [Market Makers and ]Options Participants [meeting the foregoing criteria] *who submit Improvement Orders for a PIP, including CPOs,* shall be deemed ''PIP Participants'' for that specific PIP only, and may continually submit competing Improvement Orders during that PIP. During the PIP, Improvement Orders shall be disseminated solely to Options Participants.

ii. The Options Participant who submitted the Primary Improvement Order is not permitted to cancel or to modify the size of its Primary Improvement Order or the Customer Order at any time during the PIP, and may modify only the price of its Primary Improvement Order by improving it. The subsequent price modifications to a Primary Improvement Order are treated as new Improvement Orders for the sake of establishing priority in the PIP process. *Options Participants that are permitted to submit Improvement Orders (as set forth in subparagraph i. above)[*Market Makers, except for a Market Maker that submits the relevant Primary Improvement Order,*]* may: (1) Submit competing Improvement Order(s) for any size up to the size of the Customer Order; (2) submit competing Improvement Order(s) for any price equal to or better than the Primary Improvement Order; (3) improve the price of their Improvement Order(s) at any point during the PIP; and (4) decrease the size of their Improvement Order(s) only by improving the price of that order. *Improvement Orders may be submitted in one-cent increments.*

iii. At the conclusion of the PIP, the Customer Order shall be matched against the best prevailing order(s) on BOX, in accordance with price/time priority as set forth in Section 16 of this Chapter V, whether Improvement Order(s), including CPO(s) [and PPO(s)], or unrelated order(s) received by BOX during the PIP. Such unrelated orders may include agency orders on behalf of Public Customers, market makers at away exchanges and non-Box Participant broker-dealers, as well as non-PIP proprietary orders submitted by Options Participants.

iv. The only exceptions to time priority are: (1) No order for a non-market maker broker-dealer account of an Options Participant may be executed before all Public Customer order(s), whether *an Improvement Order, including a* CPO, or unrelated, and all non-BOX Participant broker-dealer order(s) at the same price have been filled; (2) as provided in paragraph (f) of this Section 18; and (3) as provided in paragraphs (b) and (c) of Section 19 below. Any portion of an Improvement Order left unfilled shall be cancelled.

(f) The PIP Participant who submitted the Customer Order to the PIP process for price improvement retains certain priority and trade allocation privileges upon conclusion of the PIP, as follows:

i. In instances in which the Primary Improvement Order as modified (if at all) is matched by or matches any competing Improvement Order(s) and/or non-Public Customers unrelated order(s) at any price level, the PIP Participant retains priority for only forty percent (40%) of any unexecuted portion of the Customer Order available at that price level, notwithstanding the time priority of the Primary Improvement Order, competing Improvement Order(s) or non-Public Customer unrelated order(s). The PIP Participant who submitted the Customer Order to the PIP process will receive additional allocation only after all other orders have been filled at that price level.

[1] 15 U.S.C. 78s(b)(1).

[2] 17 CFR 240.19b–4.

[3] Amendment No. 1 superseded and replaced the original filing in its entirety.

ii. The Primary Improvement Order shall yield priority to certain competing orders in the following circumstances:

1. When an order for the proprietary account of an OFP is matched by or matches any competing Public Customer order(s), whether *an Improvement Order, including* a CPO, or unrelated order(s), or any non-BOX Participant broker-dealer order(s) at any price level, it shall yield priority to them, including any priority provided pursuant to subparagraph f(i), above.

2. When the unmodified Primary Improvement Order for the account of a Market Maker is matched by any competing Public Customer order(s), whether *an Improvement Order, including* a CPO, or unrelated order, or any non-BOX Participant broker-dealer order(s) at the initial PIP price level, it shall yield priority to all competing Public Customer order(s) or non-BOX Participant broker-dealer order(s), including any priority provided pursuant to subparagraph f(i), above.

3. When the modified Primary Improvement Order for the account of a Market Maker matches any competing Public Customer order(s), whether *an Improvement Order, including* a CPO, or unrelated order, or any non-BOX Participant broker-dealer order(s) at subsequent price levels, it shall yield priority to all competing Public Customer order(s) or non-BOX Participant broker-dealer order(s), including any priority provided pursuant to subparagraph f(i) above.

iii. In all cases in which the Primary Improvement Order has priority pursuant to the provisions of (i) and (ii) above, it shall be entitled to a trade allocation of at least one (1) contract.

**Note:** It shall be considered conduct inconsistent with the just and equitable principles of trade for any Options Participant to engage in a pattern of conduct where the Options Participant submits Primary Improvement Orders into the PIP process for 2 contracts or less for the purpose of manipulating the PIP process in order to gain a higher allocation percentage than the Options Participant would have otherwise received in accordance with the allocation procedures set forth in this Section 18.

(g) *In addition to Improvement Orders submitted on behalf of Public Customers,* OFPs may provide access to the PIP on behalf of a customer that is not a broker-dealer (*i.e.* Public Customer) in the form of a Customer PIP Order (''CPO'') provided that:

i. The terms of each CPO shall include a price stated in rounded five cent or ten cent increments, as appropriate, (''standard tick'') at which the order shall be placed in the BOX Book (''BOX Book Reference Price'') as well as a specific price stated in one cent increments (''penny tick'') at which the Public Customer wishes to participate in any PIPs (''CPO PIP Reference Price'') that may occur while his order is on the BOX Book and displayed at the BOX Book Reference Price;

ii. The terms of each CPO shall include a specific order size (''CPO Total Size''). The number of contracts that may be entered into a PIP must be no greater than the lesser of (a) the CPO Total Size remaining on the BOX Book or (b) the size of the Primary Improvement Order submitted to the PIP;

iii. In order for the CPO to be eligible for participation in a PIP in the subject options series, the BOX Book Reference Price for a CPO at the time a PIP commences must be equal to the best BOX price (*i.e.* the BBO).

iv. The CPO may only participate in a PIP on the same side of the market as the Primary Improvement Order.

v. Upon initiation of a PIP for which a CPO is eligible to participate pursuant to paragraphs (i)–(iv) above, the OFP who submitted the CPO to the BOX Book must submit a CPO to the PIP at a price which is better than the BOX Book Reference Price and at any price level up to the CPO PIP Reference Price. At any time during the PIP, the OFP may modify the price of the CPO submitted to the PIP to any price level up to the CPO PIP Reference Price.

(h) [Unless assigned as a Market Maker in the appropriate class, Options Participants may enter a PIP Proprietary Order (''PPO'') for their proprietary account in a PIP provided that:

i. At the commencement of the PIP, they already have an order on the BOX Book for their proprietary account equal to the best BOX price (*i.e.* the BBO).

ii. The size of the PPO entered into a PIP must be no greater than the lesser of (a) the total size remaining on the BOX Book for the proprietary order or (b) the size of the Primary Improvement Order submitted to the PIP.

iii. At any time during the PIP, the Options Participant may improve the price of the PPO submitted to the PIP.]

[(i)] In cases where an executable unrelated order is submitted to BOX on the same side as the Customer Order, such that it would cause an execution to occur prior to the end of the PIP, the PIP shall be deemed concluded and the Customer Order shall be matched pursuant to Paragraph (e)(iii) of this Section 18, above.

It shall be considered conduct inconsistent with just and equitable principles of trade for any Participant to enter unrelated orders into BOX for the purpose of disrupting or manipulating the Improvement Period process.

*(i)*[(j)] Improvement Orders, including CPOs[and PPOs], must be submitted in increments no smaller than one penny ($.01). Improvement Orders, including CPOs[and PPOs], will be displayed to BOX Options Participants, but will not be disseminated to OPRA.

*(j)*[(k)] Improvement Orders may not be executed unless the price is better than the NBBO at the commencement of the PIP, except in the following circumstances:

i. Where an Options Official determines that quotes from one or more particular markets in one or more classes of options are not reliable, the Options Official may direct the senior person in charge of BOX's Market Control Center to exclude the unreliable quotes from the Improvement Period determination of the NBBO in the particular option class(es). The Options Official may determine quotes in one or more particular options classes in a market are not reliable only in the following circumstances:

(1) Quotes Not Firm: A market's quotes in a particular options class are not firm based upon direct communication to the Exchange from the market or the dissemination through OPRA of a message indicating that disseminated quotes are not firm;

(2) Confirmed Quote Problems: A market has directly communicated to the Exchange or otherwise confirmed that the market is experiencing systems or other problems affecting the reliability of its disseminated quotes.

ii. The away options exchange posting the NBBO is conducting a trading rotation in that options class.

Supplementary Material to Section 18

01. Initially, and for at least a Pilot Period of eighteen months from the commencement of trading on BOX, there will be no minimum size requirement for Customer Orders to be eligible for the PIP process. During this Pilot Period, BOXR will submit certain data, periodically as required by the Commission, to provide supporting evidence that, among other things, there is meaningful competition for all size PIP orders, that there is significant price improvement for all orders executed through the PIP, and that there is an active and liquid market functioning on BOX outside of the PIP mechanism. Any data which is submitted to the Commission by BOXR will be provided on a confidential basis.

02. With respect to the same series, no PIP will run simultaneously with

another PIP, nor will PIPs queue or overlap in any manner.

* * * * *

## II. Self-Regulatory Organization's Statement of the Purpose of, and Statutory Basis for, the Proposed Rule Change

In its filing with the Commission, the BSE included statements concerning the purpose of, and basis for, the proposed rule change, as amended, and discussed any comments it received on the proposal. The text of these statements may be examined at the places specified in item IV below. The BSE has prepared summaries, set forth in sections A, B, and C below, of the most significant aspects of such statements.

### *A. Self-Regulatory Organization's Statement of the Purpose of, and Statutory Basis for, the Proposed Rule Change*

1. Purpose

The purpose of the proposal would be to eliminate certain restrictions on the ability of Order Flow Providers, Market Makers, and Public Customers (as defined in sections 1(46), 1(32), and 1(50), respectively, of Chapter I of the BOX Rules) to participate in BOX's price improvement period, the PIP. After an Order Flow Provider or a Market Maker submits a Customer Order (as defined in section 1(20) of Chapter I of the BOX Rules) to the PIP, the proposal would permit Order Flow Providers and Market Makers (except for the Order Flow Provider or Market Maker that submits the relevant Primary Improvement Order [4]) to submit competing orders, ''Improvement Orders,'' for their proprietary account; and, in the case of all Order Flow Providers, to submit Improvement Orders for the account of a Public Customer (as defined in section 1(19) of Chapter I of the BOX Rules). Improvement Orders may be submitted in one-cent increments at the same price as the Primary Improvement Order or at an improved price, and for any size up to the size of the Customer Order submitted to the PIP.

Currently, to participate in the PIP, unless an Options Participant (as defined in section 1(40) of Chapter I of the BOX Rules) is assigned as a Market Maker in the relevant class, Options Participants may compete only in a PIP for which: (1) They have submitted the Customer Order to the PIP (through the use of the Primary Improvement Order); (2) they hold a Customer PIP Order (as described below); or (3) they meet the requirements of Section 18(h) of Chapter V of the BOX Rules, which, among other things, include the requirement that an Options Participant have an order in the relevant class on the BOX Book (as defined in Section 1(12) of Chapter I of the BOX Rules) for their proprietary account equal to the best BOX price. If an Options Participant is assigned as a Market Maker in the relevant class, the Options Participant is not required to meet any of these requirements to participate in the PIP.

Currently, a Public Customer may participate in a PIP only if it has provided an Order Flow Provider with a Customer PIP Order. A Customer PIP Order includes a specific order size; a price stated in rounded five cent or ten cent increments, as appropriate, at which the order shall be placed in the BOX Book (the ''BOX Book Reference Price''); and a specific price stated in one cent increments at which the Public Customer wishes to participate in any PIPs that may occur while his order is on the BOX Book. Because of the inclusion of the BOX Book Reference Price, a Customer PIP Order is a hybrid of an instruction and an order. While a Customer PIP Order participates in a PIP, the order is removed from the BOX Book. Currently, a Customer PIP Order can participate in a PIP only if the BOX Book Reference Price is equal to the best BOX price at the time a PIP commences.

BSE proposes to allow Order Flow Providers to provide access to the PIP on behalf of a Public Customer not only through Customer PIP Orders, but through any type of instruction they wish to accept, so long as the Improvement Order (like a Customer PIP Order) is identified as a Public Customer Order when it is submitted to the PIP. This identification is necessary for purposes of allocation priority. Customer PIP Orders would no longer be the only Improvement Orders that could be Public Customer Orders.

BSE also proposes to eliminate the requirement that Options Participants, unless assigned as a Market Maker in the appropriate class, have an order on the BOX Book for their proprietary account equal to the best BOX price before a PIP commences to participate in the PIP. All references to the PIP Proprietary Order would be eliminated from the BOX Rules because all Options Participants (except for the Order Flow Provider or Market Maker that submits the relevant Primary Improvement Order to the PIP) could submit Improvement Orders for their proprietary accounts without restrictions, and this separate order type would no longer be necessary.

The Commission recently approved the proposal of the International Securities Exchange (the ''ISE'') to establish a price improvement mechanism (the ''PIM'').[5] The ISE's rules relating to the PIM do not include the restrictions discussed above, and some of BOX's Order Flow Providers have requested that BSE modify BOX's rules in this manner to remain competitive with the ISE.

BSE believes that the elimination of the restrictions on when Options Participants and Public Customers can compete in the PIP would increase the opportunity for them to participate in the PIP, and could lead to more robust competition in the PIP. BSE does not believe that the elimination of these restrictions would have a negative impact on the incentives for BOX Market Makers to quote competitively. The primary incentives for BOX Market Makers to quote competitively are BOX's general price/time priority rules and the trade allocation priority granted to the Market Maker Prime. A Market Maker Prime is a Market Maker who has a quote that is equal to the NBBO on the same side of the market as the Primary Improvement Order at the initiation of the PIP. If more than one Market Maker meets this criterion, the Market Maker whose quote has time priority would be the Market Maker Prime for that PIP.

A Market Maker designated as the Market Maker Prime [6] would have priority over all other Improvement Orders and unrelated orders up to one-third of the portion of the Customer Order remaining at the price level of the Market Maker Prime's Improvement Order. This priority encourages Market Makers to quote aggressively.[7]

BSE proposes to retain the Customer PIP Order because it provides Public Customers with the ability to have an order on the BOX Book and participate in a PIP without risking double liability.

[4] When an Options Participant submits a Customer Order to the PIP, the Options Participant also submits a matching contra order, the ''Primary Improvement Order,'' on the opposite side of the market than that of the Customer Order, and at a higher bid (lower offer) than that of the national best bid or offer (NBBO) at the time of the commencement of the PIP.

[5] *See* Securities Exchange Act Release No. 50819 (December 8, 2004); 69 FR 75093 (December 15, 2004) (''PIM Approval Order'').

[6] This special priority, however, would apply only if the Market Maker Prime enters an Improvement Order during the PIP.

[7] In its approval of BOX, the Commission stated that it ''believes that the BSE's proposal to give priority to a Market Maker who quotes aggressively before a PIP is initiated, is consistent with the Act and may provide a further incentive for Market Makers to publicly display their best quotes, which would benefit all options market participants.'' *See* Securities Exchange Act Release No. 49068 (January 13, 2004); 69 FR 2775 (January 20, 2004).

2. Statutory Basis

The Exchange believes that the proposal, as amended, is consistent with the requirements of section 6(b) of the Act,[8] in general, and section 6(b)(5) of the Act,[9] in particular, in that it is designed to promote just and equitable principles of trade, to remove impediments to and perfect the mechanism of a free and open market and a national market system, and protect investors and the public interest.

*B. Self-Regulatory Organization's Statement on Burden on Competition*

The Exchange does not believe that the proposed rule change, as amended, will result in any burden on competition that is not necessary or appropriate in furtherance of the purposes of the Act.

*C. Self-Regulatory Organization's Statement on Comments on the Proposed Rule Change Received From Members, Participants, or Others*

The Exchange neither solicited nor received written comments with respect to the proposed rule change, as amended.

**III. Date of Effectiveness of the Proposed Rule Change and Timing for Commission Action**

Within 35 days of the date of publication of this notice in the **Federal Register** or within such longer period (i) as the Commission may designate up to 90 days of such date if it finds such longer period to be appropriate and publishes its reasons for so finding or (ii) as to which the Exchange consents, the Commission will:

(A) By order approve such proposed rule change, as amended; or

(B) Institute proceedings to determine whether the proposed rule change, as amended, should be disapproved.

**IV. Solicitation of Comments**

Interested persons are invited to submit written data, views, and arguments concerning the foregoing, including whether the proposed rule change, as amended, is consistent with the Act. Comments may be submitted by any of the following methods:

*Electronic Comments*

- Use the Commission's Internet comment form (*http://www.sec.gov/rules/sro.shtml*); or
- Send an e-mail to *rule-comments@sec.gov.* Please include File Number SR–BSE–2005–01 on the subject line.

*Paper Comments*

- Send paper comments in triplicate to Jonathan G. Katz, Secretary, Securities and Exchange Commission, 450 Fifth Street, NW., Washington, DC 20549–0609.

All submissions should refer to File Number SR–BSE–2005–01. This file number should be included on the subject line if e-mail is used. To help the Commission process and review your comments more efficiently, please use only one method. The Commission will post all comments on the Commission's Internet Web site (*http://www.sec.gov/rules/sro.shtml*). Copies of the submission, all subsequent amendments, all written statements with respect to the proposed rule change, as amended, that are filed with the Commission, and all written communications relating to the proposed rule change, as amended, between the Commission and any person, other than those that may be withheld from the public in accordance with the provisions of 5 U.S.C. 552, will be available for inspection and copying in the Commission's Public Reference Room. Copies of such filing also will be available for inspection and copying at the principal office of the BSE. All comments received will be posted without change; the Commission does not edit personal identifying information from submissions. You should submit only information that you wish to make available publicly. All submissions should refer to File Number SR–BSE–2005–01 and should be submitted on or before April 19, 2005.

For the Commission, by the Division of Market Regulation, pursuant to delegated authority.[10]

**J. Lynn Taylor,**

*Assistant Secretary.*

[FR Doc. E5–1383 Filed 3–28–05; 8:45 am]

BILLING CODE 8010–01–P

[8] 15 U.S.C. 78f(b).

[9] 15 U.S.C. 78f(b)(5).

[10] 17 CFR 200.30–3(a)(12).

## SECURITIES AND EXCHANGE COMMISSION

**[Release No. 34–51412; File No. SR–FICC–2004–13]**

## Self-Regulatory Organizations; Fixed Income Clearing Corporation; Order Approving Proposed Rule Change To Amend the Rules of the Mortgage-Backed Securities Division To Impose Fines on Members for Violations of Minimum Financial Standards and To Modify the Penalty Assessment Process for Failures of Members To Submit Requisite Financial Reports on a Timely Basis

March 23, 2005.

**I. Introduction**

On June 24, 2004, the Fixed Income Clearing Corporation (''FICC'') filed with the Securities and Exchange Commission (''Commission'') and on February 2, 2005, amended proposed rule change SR–FICC–2004–13 pursuant to Section 19(b)(1) of the Securities Exchange Act of 1934 (''Act'').[1] Notice of the proposal was published in the **Federal Register** on February 16, 2005.[2] No comment letters were received. For the reasons discussed below, the Commission is approving the proposed rule change.

**II. Description**

FICC is seeking to amend the rules of its Mortgage-Backed Securities Division (''MBSD'') to impose fines on members for violations of minimum financial standards and to modify the penalty assessment process for failures of members to submit requisite financial reports on a timely basis.

*1. Violations of Minimum Financial Standards*

The rules of the MBSD require clearing members to meet and maintain certain minimum financial standards at all times. While the majority of MBSD members consistently satisfy their minimum financial requirements, occasionally members breach these requirements and create undue risk for FICC and its members.

Currently, the MBSD rules do not impose specific margin consequences for falling out of compliance with minimum financial requirements but allow the Membership and Risk Management Committee in its discretion to impose conditions which can include an increase in the participant's minimum required deposits to the Participants Fund.

[1] 15 U.S.C. 78s(b)(1).

[2] Securities Exchange Act Release No. 51146 (February 7, 2005), 70 FR 7984.

Under the proposed rule change, a violation of a minimum financial requirement by an MBSD clearing participant will result in the imposition on such member of a margin premium equal to the greater of (a) 25 percent of the member's unadjusted [3] Participants Fund requirement or (b) $1,000,000 which will begin on the day the participant fell below its minimum financial requirement and will continue for ninety calendar days after the later of (i) the member's return to compliance with its applicable minimum financial standards or (ii) FICC's discovery of the violation.[4] In addition, such violation will result in (1) a report of the violation to the FICC Membership and Risk Management Committee at its next regularly scheduled meeting or sooner if deemed appropriate by FICC staff and (2) the placement of such member on FICC's watch list subjecting it to frequent and thorough monitoring. None of these consequences will preclude FICC from imposing any other margin consequences permitted by the MBSD rules.

*2. Failure To Submit Requisite Financial Reports on a Timely Basis*

Certain members that are required to provide monthly or quarterly financial data to FICC at times have violated MBSD's membership requirements by not providing such financial data in a timely manner. In such instances, management contacts the offending member and follows up with a letter.

Failure to receive required information in a timely manner hinders FICC's ability to appropriately assess the financial condition of such members and as a result creates risk to FICC. To encourage timely submission of required financial data, FICC has established a mechanism to fine delinquent participants.[5] FICC is now proposing two additional measures to enforce timely filing of financial information.

First, FICC will subject delinquent participants to a more stringent Participants Fund requirement. Specifically, FICC will now automatically impose a margin premium equal to the greater of (1) 25 percent of the member's unadjusted Participants Fund requirement or (2) $1,000,000. The margin premium will be applied until appropriate financial data is submitted to FICC and reviewed for compliance purposes. In addition, delinquent members will be precluded from taking back any excess Participants Fund collateral to which they might ordinarily be entitled.

Second, participants that fail to submit requisite financial reports on a timely basis will also automatically be placed on FICC's watch list and subject to frequent and thorough monitoring.

## III. Discussion

Section 17A(b)(3)(F) of the Act requires that the rules of a clearing agency be designed to facilitate the safeguarding of securities and funds which are in its custody or control or for which it is responsible.[6] The Commission finds that FICC's proposed rule change is consistent with this requirement because it assures the safeguarding of such securities and funds by incentivizing participants to maintain their minimum financial standards and to submit their required financial reports on a timely basis. As a result, FICC's ability to monitor its participants and to maintain a financially sound participant base should be enhanced.

## IV. Conclusion

On the basis of the foregoing, the Commission finds that the proposed rule change is consistent with the requirements of the Act and in particular section 17A of the Act and the rules and regulations thereunder.

*It is therefore ordered,* pursuant to section 19(b)(2) of the Act, that the proposed rule change (File No. SR–FICC–2004–13) be and hereby is approved.

For the Commission by the Division of Market Regulation, pursuant to delegated authority.[7]

**J. Lynn Taylor,**

*Assistant Secretary.*

[FR Doc. E5–1381 Filed 3–28–05; 8:45 am]

**BILLING CODE 8010–01–P**

[3] ''Unadjusted'' means the standard calculation before any additional assessments.

[4] The required clearing fund deposit premium that will be assessed for violation of applicable minimum financial standards will be effective beginning on the day of the violation but will begin to be assessed on the date FICC becomes aware of the violation.

[5] Securites Exchange Act Release No. 49947 [June 30, 2004), 69 FR 41316 (File No. SR–FICC–2003–01].

[6] 15 U.S.C. 78q–1(b)(3)(F).

[7] 17 CFR 200.30–3(a)(12).

## SECURITIES AND EXCHANGE COMMISSION

**[Release No. 34–51413; File No. SR–FICC–2004–17]**

## Self-Regulatory Organizations; Fixed Income Clearing Corporation; Notice of Filing of a Proposed Rule Change To Modify the Assessment Process for Late Submissions of Collateral Made Through the GCF Repo Service and To Increase the Types of Securities Available To Satisfy Collateral Allocation Obligations

March 23, 2005.

Pursuant to section 19(b)(1) of the Securities Exchange Act of 1934 (''Act''),[1] notice is hereby given that on August 13, 2004, the Fixed Income Clearing Corporation (''FICC'') filed with the Securities and Exchange Commission (''Commission'') and on March 14, 2005, amended the proposed rule change described in items I, II, and III below, which items have been prepared primarily by FICC. The Commission is publishing this notice to solicit comments on the proposed rule change from interested parties.

### I. Self-Regulatory Organization's Statement of the Terms of Substance of the Proposed Rule Change

FICC is seeking to amend the rules of the Government Securities Division (''GSD'') of FICC to modify the assessment process for late submissions of collateral allocations made through its GCF Repo service and to increase the types of securities that can be used by a member in satisfaction of collateral obligations.[2]

### II. Self-Regulatory Organization's Statement of the Purpose of, and Statutory Basis for, the Proposed Rule Change

In its filing with the Commission, FICC included statements concerning the purpose of and basis for the proposed rule change and discussed any comments it received on the proposed rule change. The text of these statements may be examined at the places specified in item IV below. FICC has prepared summaries, set forth in sections (A), (B),

[1] 15 U.S.C. 78s(b)(1).

[2] The proposed rule change also amends GSD's rules to clarify that where a collateral allocation obligation is satisfied by the posting of U.S. Treasury Bills, notes, or bonds, such securities must mature in a time frame no greater than that of the securities that have been traded except where such traded securities are U.S. Treasury Bills, such obligations must be satisfied with the posting of ''comparable securities'' and/or cash only.

and (C) below, of the most significant aspects of these statements.[3]

*(A) Self-Regulatory Organization's Statement of the Purpose of, and Statutory Basis for, the Proposed Rule Change*

1. Assessment Process for Late Submissions of Collateral Allocations Made Through the GCF Repo Service

On October 30, 1998, the Commission granted approval to FICC's predecessor, the Government Securities Clearing Corporation, to implement its GCF Repo service, which is a significant alternative financing vehicle to the delivery versus payment and tri-party repo markets. That approval included a fine schedule for failure to adhere to relevant timeframes.[4] The fine schedule was not implemented because of certain events.[5] More recently, FICC has shifted the service from an interbank service to an intrabank service in order to address certain payment system risk issues that have arisen and that have resulted in decreased volumes.[6] FICC believes, given the lower volumes and likely forthcoming changes to the service to address the payment system risk issues, that the original fine schedule should be replaced.

Specifically, FICC is proposing to implement a late fee schedule to replace the late fine schedule. FICC believes that late fee schedules are appropriate in situations where the member's lateness causes an operational burden but does not result in risk to FICC or its members.[7] In addition, in order to encourage members to make their collateral allocations on a timely basis, there would be one late fee targeted to the most significant timeframe surrounding the service. Specifically, if a dealer does not make the required collateral allocation by the later of 4:30 p.m. (New York time) or 1 hour after the actual close of Fedwire GCF repo reversals, the dealer will be subject to a late fee of $500.00. Finally, in order to alleviate the potential operational and administrative burdens caused by late collateral allocations, FICC is proposing to amend the GCF Repo rules to provide that FICC will process collateral allocation obligations that are received after 6 p.m. on a good faith basis only. This 6 p.m. deadline will replace the 7 p.m. final cutoff for dealer allocations of collateral to satisfy obligations.

2. Types of Collateral Used to Satisfy Collateral Allocation Obligations

Currently, GSD Rule 20 provides that a collateral allocation obligation may be satisfied with ''comparable securities,'' Treasury securities, and/or cash. ''Comparable securities'' are defined to include any securities that are represented by the same generic CUSIP number as the securities in question. Therefore, in the event that a member does not have enough of the collateral securities or the Comparable Securities, the only collateral that can be used is Treasury securities and/or cash.

GSD members have approached FICC and asked that the rules be amended to add additional collateral options as set forth below:

(a) Ginnie Mae adjustable-rate mortgage obligations could be satisfied with Ginnie Mae fixed-rate mortgage backed securities and

(b) Fannie Mae and Freddie Mac adjustable-rate mortgage obligations could be satisfied with: (i) Fannie Mae and Freddie Mac fixed-rate mortgage-backed securities, (ii) Ginnie Mae fixed-rate mortgage-backed securities, and (iii) Ginnie Mae adjustable-rate mortgage obligations.[8]

FICC believes that the proposed rule change is consistent with the requirements of section 17A of the Act[9] and the rules and regulations thereunder applicable to FICC because it is designed to promote the prompt and accurate clearance and settlement of securities transactions by allowing FICC's members additional collateral options with which to meet GCF collateral allocation obligations and by implementing a fee schedule that should incentivize members to allocate collateral on a timely basis.

*(B) Self-Regulatory Organization's Statement on Burden on Competition*

FICC does not believe that the proposed rule change will have any impact or impose any burden on competition.

*(C) Self-Regulatory Organization's Statement on Comments on the Proposed Rule Change Received From Members, Participants or Others*

Written comments relating to the proposed rule change have not yet been solicited or received. FICC will notify the Commission of any written comments received by FICC.

**III. Date of Effectiveness of the Proposed Rule Change and Timing for Commission Action**

Within thirty-five days of the date of publication of this notice in the **Federal Register** or within such longer period (i) as the Commission may designate up to ninety days of such date if it finds such longer period to be appropriate and publishes its reasons for so finding or (ii) as to which the self-regulatory organization consents, the Commission will:

(A) By order approve such proposed rule change or

(B) Institute proceedings to determine whether the proposed rule change should be disapproved.

**IV. Solicitation of Comments**

Interested persons are invited to submit written data, views, and arguments concerning the foregoing, including whether the proposed rule change is consistent with the Act. Comments may be submitted by any of the following methods:

*Electronic Comments*

- Use the Commission's Internet comment form (*http://www.sec.gov/rules/sro.shtml*) or
- Send an e-mail to *rule-comments@sec.gov.* Please include File Number SR–FICC–2004–17 on the subject line.

*Paper Comments*

- Send paper comments in triplicate to Jonathan G. Katz, Secretary, Securities and Exchange Commission, 450 Fifth Street, NW., Washington, DC 20549–0609. All submissions should refer to File Number SR–FICC–2004–17. This file number should be included on the subject line if e-mail is used. To help the Commission process and review your comments more efficiently, please use only one method. The Commission will post all comments on the Commission's Internet Web site (*http://www.sec.gov/rules/sro.shtml*). Copies of the submission, all subsequent amendments, all written statements with respect to the proposed rule change that are filed with the Commission, and all written communications relating to the proposed rule change between the

[3] The Commission has modified the text of the summaries prepared by FICC.

[4] Securities Exchange Act Release No. 40623 (October 30, 1998), 63 FR 59831 (November 5, 1998) [File No. SR–GSCC–98–02].

[5] As a new and complex service, members had difficulty adhering to the timeframes. In addition, the initial rate of participation was very poor, and there was a consequent need to encourage growth in the service.

[6] Securities Exchange Act Release No. 48006 (June 10, 2003), 68 FR 35745 (June 16, 2003) [SR–FICC–2003–04].

[7] In a GCF Repo transaction, a borrower does not receive the funds borrowed until it makes the required collateral allocation. The lender maintains control of the funds until the allocation is made. The transaction does not produce a risk of loss to FICC, the lender, or other members.

[8] The industry recognizes fixed-rate securities as an acceptable substitute for adjustable-rate securities as collateral for mortgage-backed repo trades.

[9] 15 U.S.C. 78q–1.

Commission and any person, other than those that may be withheld from the public in accordance with the provisions of 5 U.S.C. 552, will be available for inspection and copying in the Commission's Public Reference Section, 450 Fifth Street, NW., Washington, DC 20549. Copies of such filing also will be available for inspection and copying at the principal office of FICC and on FICC's Web site at *http://www.ficc.com/gov/gov.docs.jsp?NS-query.* All comments received will be posted without change; the Commission does not edit personal identifying information from submissions. You should submit only information that you wish to make available publicly.

All submissions should refer to File Number SR–FICC–2004–17 and should be submitted on or before April 19, 2005.

For the Commission by the Division of Market Regulation, pursuant to delegated authority.[10]

**J. Lynn Taylor,**

*Assistant Secretary.*

[FR Doc. E5–1382 Filed 3–28–05; 8:45 am]

**BILLING CODE 8010–01–P**

---

## SECURITIES AND EXCHANGE COMMISSION

**[Release No. 34–51410; File No. SR–ISE–2004–27]**

## Self-Regulatory Organizations; Notice of Filing of Proposed Rule Change and Amendments No. 1 and No. 2 by the International Securities Exchange, Inc., Relating to Trading Options on Reduced Values of the NYSE U.S. 100 Index, the NYSE International 100 Index, the NYSE World Leaders Index, and the NYSE TMT Index, Including Long-Term Options

March 22, 2005.

Pursuant to section 19(b)(1) of the Securities Exchange Act of 1934 (''Act''),[1] and Rule 19b–4 thereunder,[2] notice is hereby given that on July 23, 2004, the International Securities Exchange, Inc. (''ISE'' or ''Exchange'') filed with the Securities and Exchange Commission (''Commission'') the proposed rule change as described in items I, II and III below, which items have been prepared by the ISE. The ISE submitted Amendments No. 1 and No. 2 to the proposal on January 5, 2005,[3] and March 1, 2005, respectively.[4] The Commission is publishing this notice to solicit comments on the proposed rule change from interested persons.

### I. Self-Regulatory Organization's Statement of the Terms of Substance of the Proposed Rule Change

The ISE is proposing to amend its rules to trade options on three broad-based indexes and one narrow-based index, whose components currently trade on the New York Stock Exchange, Inc (''NYSE''). The NYSE U.S. 100 Index, the NYSE International 100 Index and the NYSE World Leaders Index are all broad-based indexes. The NYSE TMT Index is a narrow-based index. Options on these indexes would be cash-settled and would have European-style exercise provisions.

The text of the proposed rule change is available on the ISE's Web site (*http://www.iseoptions.com*), at the ISE's Office of the Secretary, and at the Commission.

### II. Self-Regulatory Organization's Statement of the Purpose of, and Statutory Basis for, the Proposed Rule Change

In its filing with the Commission, the ISE included statements concerning the purpose of, and basis for, the proposed rule change and discussed any comments it received on the proposed rule change, as amended. The text of these statements may be examined at the places specified in Item IV below. The ISE has prepared summaries, set forth in sections A, B and C below, of the most significant aspects of such statements.

*A. Self-Regulatory Organization's Statement of the Purpose of, and Statutory Basis for, the Proposed Rule Change*

1. Purpose

The Exchange proposes to amend its rules to provide for the listing and trading on the Exchange of cash-settled, European-style, index options on the NYSE U.S. 100 Index, the NYSE International 100 Index, and the NYSE World Leaders Index (the ''Broad Based NYSE Indexes'') and the NYSE TMT Index (the ''Narrow Based NYSE Index'') (collectively, the ''NYSE Indexes'').[5] Specifically, the Exchange proposes to list options based upon (i) one-tenth of the value of the NYSE Indexes (''Mini Index Options'') and (ii) one one-hundredth of the value of the NYSE Indexes (''Micro Index Options''). In Amendment No. 2, which replaced the original filing in its entirety, the ISE proposed a reduced number of contracts for position and exercise limits, addressed one of the events that the Exchange will monitor on an annual basis, and made other technical corrections to the filing.

*Index Design and Composition*

The NYSE Indexes are designed to be a comprehensive representation of the investable United States equity market. Each NYSE Index is a float-adjusted capitalization-weighted index,[6] whose components are all traded on the NYSE.

*NYSE U.S. 100 Index*

The NYSE U.S. 100 Index tracks the top 100 U.S. stocks trading on the NYSE. The companies represented have a market capitalization of $5.95 trillion, which covers 47% of the entire market capitalization of U.S. companies and over 62% of U.S. companies listed on the NYSE. Additionally, these companies are major market participants, most of which are well-known household names. This fact, along with the NYSE's significant U.S. market penetration, ensures that this index will closely track the entire U.S. market. This index is designed to assist investors looking to track the U.S. market across 10 industry sectors, as defined by Dow Jones & Company (''Dow Jones'').

The NYSE U.S. 100 Index is calculated using a rules-based methodology that is fully transparent. Its original selection pool includes all U.S. stocks listed on the NYSE. The entire index universe is ranked in descending order by unadjusted market capitalization. If a component has multiple share classes, the most liquid issue for that company is included. Companies that fail a liquidity test, *i.e.*, average trading volume of 100,000 shares for the preceding three months, are removed. The top 100 companies are then selected from the remaining universe, and the index is weighted by float-adjusted market capitalization.

The index is reviewed quarterly, with an 80–120 buffer applied to limit

---

[10] 17 CFR 200.30–3(a)(12).

[1] 15 U.S.C. 78s(b)(1).

[2] 17 CFR 240.19b–4.

[3] Amendment No. 1 set forth a list of the underlying components of the NYSE Indexes.

[4] Amendment No. 2 replaced the original filing in its entirety, proposed a reduce number of contracts for position and exercise limits, addressed one of the events that the Exchange will monitor on an annual basis, and made other technical corrections to the filing.

[5] A description of each of the NYSE Indexes can be found on the NYSE's Web site at *http://www.nyseindexes.com.*

[6] The calculation of a float-adjusted, market-weighted index involves taking the summation of the product of the price of each stock in the index and the number of shares available to the public for trading, rather than the total shares oustanding for each issue. In contrast, a price-weighted index involves taking the summation of the prices of the stocks in the index.

turnover. When the universe is ranked by market capitalization, all stocks in the top 80 are automatically included in the index, while all stocks ranked below 120 are automatically excluded. The remaining components are selected from stocks falling between 80 and 120, starting with the highest ranked component. In addition to the scheduled quarterly review, the index is reviewed on an ongoing basis to accommodate extraordinary events, such as delistings, bankruptcies, mergers or acquisitions involving index components.

The NYSE U.S. 100 Index components are classified in ten market sectors. As of March 18, 2004, these sectors and their respective weightings were: Basic Materials (1.9%); Consumer, Cyclical (13.4%); Consumer, Non-Cyclical (11.4%); Energy (7.5%); Financial (23.3%); Healthcare (18.7%); Industrial (10.7%); Technology (5.9%); Telecommunication (6.7%); and Utilities (0.5%).

As set forth in Exhibit 3 to the proposal, as of March 18, 2004, following are the characteristics of the NYSE U.S. 100 Index: (i) The total capitalization of all of the components in the Index is $6.166 trillion; (ii) regarding component capitalization, (a) the highest capitalization of a component is $310.02 billion (General Electric), (b) the lowest capitalization of a component is $17.13 billion (Kohl's Corp.), (c) the mean capitalization of the components is $61.665 billion, and (d) the median capitalization of the components is $40.673 billion; (iii) regarding component price per share, (a) the highest price per share of a component is $106.82 (Genentech), (b) the lowest price per share of a component is $11.16 (Liberty Media Group), (c) the mean price per share of the components is $48.53, and (d) the median price per share of the components is $44.40; (iv) regarding component weightings, (a) the highest weighting of a component is 5.03% (General Electric), (b) the lowest weighting of a component is 0.28% (Kohl's Corp.), (c) the mean weighting of the components is 1.0%, (d) the median weighting of the components is 0.66%, and (e) the total weighting of the top five highest weighted components is 22.2% (General Electric, ExxonMobil, Pfizer, Citigroup, Wal-Mart Stores); (v) regarding component available shares, (a) the most available shares of a component is 9.98 billion (General Electric), (b) the least available shares of a component is 206 million (Genentech), (c) the mean available shares of the components is 1.396 billion, and (d) the median available shares of the components is 918.3 million; (vi) regarding the six month average daily volumes of the components, (a) the highest six month average daily volume of a component is 22.428 million (AT&T Wireless), (b) the lowest six month average daily volume of a component is 906,810 (SunTrust Banks), (c) the mean six month average daily volume of the components is 5.376 million, (d) the median six month average daily volume of the components is 4.082 million, (e) the average of six month average daily volumes of the five most heavily traded components is 18.953 million (AT&T Wireless, General Electric, Pfizer, Time Warner, Motorola), and (f) 100% of the components had a six month average daily volume of at least 50,000; and (vii) regarding option eligibility, (a) 100% of the components are options eligible, as measured by weighting and (b) 100% of the components are options eligible, as measured by number.

*NYSE International 100 Index*

The NYSE International 100 Index is designed to assist investors seeking to track international markets. This index tracks the 100 largest non-U.S. stocks trading on the NYSE. It covers 27.1% of the international stock market and has a total market capitalization of $3.8 trillion. Currently, the components of the NYSE International 100 Index represent 18 countries.[7] All of the components of this index are priced on the NYSE during U.S. trading hours. ISE believes its limited number of components and intraday pricing makes the NYSE International 100 Index suitable for tracking the non-U.S. market and for use as the basis for investable products.

The NYSE International 100 Index is also calculated using a rules-based methodology that is fully transparent. Its original selection pool includes all non-U.S. stocks listed on the NYSE. The entire index universe is ranked in descending order by unadjusted market capitalization. If a component has multiple share classes, the most liquid issue for that company is included. Companies that fail a liquidity test, *i.e.*, average trading volume of 100,000 shares for the preceding three months, are removed. The top 100 companies are then selected from the remaining universe, and the index is weighted by float-adjusted market capitalization.

The index is reviewed quarterly, with an 80–120 buffer applied to limit turnover. When the universe is ranked by market capitalization, all stocks in the top 80 are automatically included in the index, while all stocks ranked below 120 are automatically excluded. The remaining components are selected from stocks falling between 80 and 120, starting with the highest ranked component. In addition to the scheduled quarterly review, the index is reviewed on an ongoing basis to accommodate extraordinary events, such as delistings, bankruptcies, mergers or acquisitions involving index components.

The NYSE International 100 Index components are classified in ten market sectors. As of March 18, 2004, these sectors and their respective weightings were: Basic Materials (3.1%); Consumer, Cyclical (11.1%); Consumer, Non-Cyclical (5.2%); Energy (17.7%); Financial (27.7%); Healthcare (12.0%); Industrial (1.1%); Technology (8.3%); Telecommunication (10.6%); and Utilities (3.2%).

As set forth in Exhibit 3 to the proposal, as of March 18, 2004, following are the characteristics of the NYSE International 100 Index: (i) The total capitalization of all of the components in the Index is $4.308 trillion; (ii) regarding component capitalization, (a) the highest capitalization of a component is $182.444 billion (BP plc), (b) the lowest capitalization of a component is $4.99 billion (Rinker Group), (c) the mean capitalization of the components is $43.086 million, and (d) the median capitalization of the components is $30.612 million; (iii) regarding component price per share, (a) the highest price per share of a component is $117.73 (National Australia Bank), (b) the lowest price per share of a component is $5.33 (United Microelectronics), (c) the mean price per share of the components is $37.73, and (d) the median price per share of the components is $33.91; (iv) regarding component weightings, (a) the highest weighting of a component is 4.23% (BP

[7] According to the ISE, 98 of the 100 underlying components in the NYSE International 100 Index meet ISE's listing criteria for equity options as set forth in ISE Rule 502. This represents 97.93% of the index by market capitalization weight and 98% by number. Two American Depository Receipts (''ADRs'') underlying the NYSE International 100 Index, Allianz AG (''AZ'') and Telefonica Moviles SA (''TEM''), do not meet the requirements of ISE Rule 502, because the NYSE does not have in place an effective surveillance sharing agreement with the primary exchange in the home country where AZ and TEM are traded. However, the U.S. market for the underlying ADRs is at least 50% or more of the worldwide trading volume. The Commission believes that it is appropriate to permit the listing of options on an ADR without the existence of a comprehensive surveillance agreement with the foreign market where the underlying component trades, as long as the U.S. market for the underlying ADR is at least 50% or more of the worldwide trading volume. Telephone conversation between Samir Patel, Assistant General Counsel, ISE, and A. Michael Pierson, Attorney, Division, Commission (March 21, 2005).

plc), (b) the lowest weighting of a component is 0.05% (Rinker Group), (c) the mean weighting of the components is 1.0%, (d) the median weighting of the components is 0.71%, and (e) the total weighting of the top five highest weighted components is 16.96% (BP plc, Vodafone, HSBC Holdings, Toyota, and GlaxoSmithKline); (v) regarding component available shares, (a) the most available shares of a component is 6.82 billion (Vodafone), (b) the least available shares of a component is 93.55 million (Rinker Group), (c) the mean available shares of the components is 1.581 billion, and (d) the median available shares of the components is 1.079 million; (vi) regarding the six month average daily volumes of the components, (a) the highest six month average daily volume of a component is 39.803 million (Nortel), (b) the lowest six month average daily volume of a component is 9,150 (Westpac Banking), (c) the mean six month average daily volume of the components is 1.054 million, (d) the median six month average daily volume of the components is 197,450, (e) the average of six month average daily volumes of the five most heavily traded components is 13.023 million (Nortel, Nokia, Taiwan Semiconductor, United Microelectronics, BP plc), and (f) 79% of the components had a six month average daily volume of at least 50,000; and (vii) regarding option eligibility, (a) 88.15% of the components are options eligible, as measured by weighting and (b) 79% of the components are options eligible, as measured by number.

*NYSE World Leaders Index*

The NYSE World Leaders is designed to serve as a benchmark to track, as a single asset class, the performance of 200 world leaders across 10 industry sectors and all regions of the world. This index is constructed by combining the NYSE U.S. 100 Index and NYSE International 100 Indexes. The components of the NYSE World Leaders Index have a total market capitalization of $9.7 trillion and cover 36.7% of the market capitalization of the world markets. It is well diversified across 10 industry sectors, as defined by Dow Jones, and currently represents 19 countries, including the United States. All of the components of this index are priced on the NYSE during U.S. trading hours. The ISE believes the limited number of components and intraday pricing makes the NYSE World Leaders Index suitable for tracking the global market and for use as the basis for investable products.

The NYSE World Leaders Index is also calculated using a rules-based methodology that is fully transparent. Its original selection pool includes all stocks listed on the NYSE. The index universes for the NYSE U.S. 100 and NYSE International 100 are each ranked in descending order by unadjusted market capitalization. If a component has multiple share classes, the most liquid issue for that company is included. Companies that fail a liquidity test, *i.e.*, average trading volume of 100,000 shares for the preceding three months, are removed. The top 100 companies are then selected from the remaining stocks in each universe, and the index is weighted by float-adjusted market capitalization.

The NYSE U.S. 100 and the NYSE International 100 Indexes are reviewed quarterly, with an 80–120 buffer applied to limit turnover. When the universes are ranked by market capitalization, all stocks in the top 80 are automatically included in the index, while all stocks ranked below 120 are automatically excluded. The remaining components are selected from stocks falling between 80 and 120, starting with the highest ranked component. In addition to the scheduled quarterly review, the index is reviewed on an ongoing basis to accommodate extraordinary events, such as delistings, bankruptcies, mergers or acquisitions involving index components.

The NYSE World Leaders Index components are classified in ten market sectors. As of March 18, 2004, these sectors and their respective weightings were: Basic Materials (2.3%); Consumer, Cyclical (12.6%); Consumer, Non-Cyclical (9.2%); Energy (11.2%); Financial (24.1%); Healthcare (16.3%); Industrial (7.2%); Technology (6.8%); Telecommunication (8.1%); and Utilities (1.5%).

As set forth in Exhibit 3 to the proposal, as of March 18, 2004, following are the characteristics of the NYSE World Leaders Index: (i) The total capitalization of all of the components in the Index is $10.533 trillion; (ii) regarding component capitalization, (a) the highest capitalization of a component is $310.02 billion (General Electric), (b) the lowest capitalization of a component is $4.99 billion (Rinker Group), (c) the mean capitalization of the components is $52.668 billion, and (d) the median capitalization of the components is $37.291 billion; (iii) regarding component price per share, (a) the highest price per share of a component is $117.73 (National Australia Bank), (b) the lowest price per share of a component is $5.33 (United Microelectronics), (c) the mean price per share of the components is $43.39, and (d) the median price per share of the components is $40.59; (iv) regarding component weightings, (a) the highest weighting of a component is 2.94% (General Electric), (b) the lowest weighting of a component is 0.05% (Rinker Group), (c) the mean weighting of the components is 1.08%, (d) the median weighting of the components is 0.36%, and (e) the total weighting of the top five highest weighted components is 12.99% (General Electric, ExxonMobil, Pfizer, Citigroup, Wal-Mart Stores); (v) regarding component available shares, (a) the most available shares of a component is 9.98 billion (General Electric), (b) the least available shares of a component is 93.55 million (Rinker Group), (c) the mean available shares of the components is 1.326 billion, and (d) the median available shares of the components is 865.3 million; (vi) regarding the six month average daily volumes of the components, (a) the highest six month average daily volume of a component is 39.803 million (Nortel), (b) the lowest six month average daily volume of a component is 9,150 (Westpac Banking), (c) the mean six month average daily volume of the components is 3.218 million, (d) the median six month average daily volume of the components is 1.73 million, (e) the average of six month average daily volumes of the five most heavily traded components is 24.16 million (Nortel, AT&T Wireless, General Electric, Pfizer, Time Warner), and (f) 89.5% of the components had a six month average daily volume of at least 50,000; and (vii) regarding option eligibility, (a) 95.1% of the components are options eligible, as measured by weighting, and (b) 89.5% of the components are options eligible, as measured by number.

*NYSE TMT Index*

The NYSE TMT Index is a narrow-based index. For narrow-based indexes that meet the standards of an exchange's rules, an SRO need only complete Form 19b–4(e) at least five business days after commencement of trading the new product. Since the listing of this product does not meet all of the requirements of ISE Rule 2002(b), Form 19b–4(e) is not available for the listing of this product, giving rise to the need for this filing.

The NYSE TMT Index is designed to track the top 100 technology, media and telecommunications stocks listed on the NYSE. The companies represented have a market capitalization of $2.3 trillion, which covers 45.7% of the entire market capitalization of technology, media and telecommunication companies globally and is approximately the same size as the nearly 4,000 companies in the Nasdaq Composite Index. All of the

components of this index are priced on the NYSE during U.S. trading hours.

The NYSE TMT Index is also calculated using a rules-based methodology that is fully transparent. Its original selection pool includes all technology, media and telecommunication stocks listed on the NYSE. The entire index universe is ranked in descending order by unadjusted market capitalization. If a component has multiple share classes, the most liquid issue for that company is included. Companies that fail a liquidity test, *i.e.*, average trading volume of 100,000 shares for the preceding three months, are removed. The top 100 companies are then selected from the remaining universe, and the index is weighted by float-adjusted market capitalization.

The index is reviewed quarterly, with an 80–120 buffer applied to limit turnover. When the universe is ranked by market capitalization, all stocks in the top 80 are automatically included in the index, while all stocks ranked below 120 are automatically excluded. The remaining components are selected from stocks falling between 80 and 120, starting with the highest ranked component. At the quarterly rebalancing, market sector weights for technology, media and telecommunications are capped at no more than 40% and the sub-group weights are capped at no more than 20%. This ensures that one sector or sub-group does not dominate the index. In addition to the scheduled quarterly review, the index is also reviewed on an ongoing basis to accommodate extraordinary events, such as delistings, bankruptcies, mergers or acquisitions involving index components.

The NYSE TMT Index components are classified in 14 industry sub-groups within the technology, media and telecommunication sectors. As of March 18, 2004, the sub-groups and their respective weightings were: Advertising (1.9%); Broadcasting (18.9%); Communications Technology (11.8%); Computers (13.0%); Diversified Technology Services (2.4%); Entertainment (0.3%); Fixed-line Communications (20.9%); Internet Services (0.0%); Office Equipment (1.2%); Publishing (6.1%); Semiconductors (10.8%); Technology, Software (2.8%); Wireless Communications (9.9%); and Other: Non-Technology, Media and Telecommunication (0.0%).

As set forth in Exhibit 3 to the proposal, as of March 18, 2004, following are the characteristics of the NYSE TMT Index: (i) The total capitalization of all of the components in the Index is $2.701 trillion; (ii) regarding component capitalization, (a) the highest capitalization of a component is $165.12 billion (Vodafone Group), (b) the lowest capitalization of a component is $2.89 billion (Westwood One, Inc.), (c) the mean capitalization of the components is $27.01 billion, and (d) the median capitalization of the components is $15.38 billion; (iii) regarding component price per share, (a) the highest price per share of a component is $115.13 (Mobile Telesystems), (b) the lowest price per share of a component is $3.93 (Lucent Technologies Inc.), (c) the mean price per share of the components is $30.05, and (d) the median price per share of the components is $25.98; (iv) regarding component weightings, (a) the highest weighting of a component is 6.11% (Vodafone Group), (b) the lowest weighting of a component is 0.11% (Westwood One Inc.), (c) the mean weighting of the components is 1.0%, (d) the median weighting of the components is 0.57%, and (e) the total weighting of the top five highest weighted components is 23.62% (Vodafone Group, International Business Machines Corp., NTT Docomo Inc., Verizon Communications, and Nokia Corp.); (v) regarding component available shares, (a) the most available shares of a component is 6.82 billion (Vodafone Group), (b) the least available shares of a component is 0.08 billion (Knight Ridder Inc.), (c) the mean available shares of the components is 1.37 billion, and (d) the median available shares of the components is 0.76 billion; (vi) regarding the six month average daily volumes of the components, (a) the highest six month average daily volume of a component is 72.058 million (Lucent Technologies Inc.), (b) the lowest six month average daily volume of a component is 1.53 million (Telekom Austria Ag), (c) the mean six month average daily volume of the components is 4.138 million, (d) the median six month average daily volume of the components is 1.302 million, (e) the average of six month average daily volumes of the five most heavily traded components is 33,526 million (Lucent Technologies Inc., Nortel Networks Corp., AT&T Wireless Services Inc., Time Warner Inc., and Motorola Inc.), and (f) 86% of the components had a six month average daily volume of at least 50,000; and (vii) regarding option eligibility, (a) 100% of the components are options eligible, as measured by weighting and (b) 100% of the components are options eligible, as measured by number.

*Index Calculation and Index Maintenance*

On March 18, 2004, the index value for the NYSE U.S. 100, the NYSE International 100, the NYSE World Leaders and the NYSE TMT was 5763.80, 4505.70, 5273.40, and 5060.90, respectively. The Exchange believes that these levels are too high for successful options trading. Accordingly, the Exchange proposes to base trading in these options on fractions of each of the NYSE Indexes' value. In particular, the Exchange proposes to list (i) Mini Index Options that are based on one-tenth of the value of each of the NYSE Indexes and (ii) Micro Index Options that are based on one one-hundredth of the value of each of the NYSE Indexes. The Exchange believes that listing options on reduced values will attract a greater source of customer business than if options were based on the full value of the Index. The Exchange further believes that listing options on reduced values will provide an opportunity for investors to hedge, or speculate on, the market risk associated with the stocks comprising the NYSE Indexes. Additionally, by reducing the values of the NYSE Indexes, investors will be able to utilize this trading vehicle, while extending a smaller outlay of capital. The Exchange believes that this should attract additional investors, and, in turn, create a more active and liquid trading environment.[8]

The Mini Index Options level and the Micro Index Options level shall each be calculated continuously, using the last sale price for each component stock in each of the NYSE Indexes, and shall be disseminated every 15 seconds throughout the trading day.[9] To calculate the full value of the NYSE Indexes, the sum of the market value of

[8] The concept of listing reduced value options on an index is not a novel one. *See, e.g.*, Securities Exchange Act Release Nos. 32893 (September 14, 1993), 58 FR 49070 (September 21, 1993) (order approving File No. SR–CBOE–93–12) (approving the listing and trading of options based on one-tenth the value of the S&P 500 Index); 43000 (June 30, 2000), 65 FR 42409 (July 10, 2000) (notice of filing and immediate effectiveness of File No. SR–CBOE–00–15) (listing and trading of options based on one-tenth of the value of the Nasdaq 100 Index); and 48681 (October 22, 2003), 68 FR 62337 (November 3, 2003) (order approving File No. SR–CBOE–2003–14) (approving the listing and trading of options based on one-tenth of the value of the NYSE Composite Index).

[9] The Mini Index Options level and the Micro Index Options level shall each be calculated by Dow Jones on behalf of the NYSE and disseminated to the Consolidated Quote System (''CQS''). The Exchange shall receive those values from CQS and disseminate them to its members. Each of the NYSE Indexes is published daily in real-time on the NYSE's public website and through, among other places, major quotation vendors such as Reuters and Thomson's ILX.

the stocks in each of the NYSE Indexes is divided by the base period market value (divisor), and the result is multiplied by 100. To calculate the value of the Mini Index Options level, the full value of each of the NYSE Indexes is divided by ten. To calculate the value of the Micro Index Options level, the full value of each of the NYSE Indexes is divided by one hundred. In order to provide continuity for each of the NYSE Indexes' value, the divisor is adjusted periodically to reflect such events as changes in the number of common shares outstanding for component stocks, company additions or deletions, corporate restructurings and other capitalization changes.

The settlement value for purposes of settling Mini Index Options (''Mini Settlement Value'') and Micro Index Options (''Micro Settlement Value'') shall each be calculated on the basis of opening market prices on the business day prior to the expiration date of such options (''Settlement Day'').[10] The Settlement Day is normally the Friday preceding ''Expiration Saturday.'' [11] In the event that a component security in the Index does not trade on Settlement Day, the closing price from the previous trading day is used to calculate the Settlement Value. Accordingly, trading in Mini Index Options and Micro Index Options will normally cease on the Thursday preceding an Expiration Saturday. Dow Jones shall calculate, and the Exchange shall disseminate, both the Mini Settlement Value and the Micro Settlement Value in the same manner as the Dow Jones shall calculate, and the Exchange shall disseminate, the Mini Index Options level and the Micro Index Options level.

Dow Jones will monitor and maintain each of the NYSE Indexes. Dow Jones is responsible for making all necessary adjustments to each of the NYSE Indexes to reflect component deletions, share changes, stock splits, stock dividends (other than an ordinary cash dividend), and stock price adjustments due to restructuring, mergers, or spin-offs involving the underlying components. Some corporate actions, such as stock splits and stock dividends, require simple changes to the available shares outstanding and the stock prices of the underlying components. Other corporate actions, such as share issuances, change the market value of each of the NYSE Indexes and would require the use of an index divisor to effect adjustments.

Although the Exchange is not involved in the maintenance of the NYSE Indexes, the Exchange represents that it will monitor the NYSE Indexes on an quarterly basis,[12] at which point the Exchange will notify the Market Regulation Division of the Commission if: (i) The number of securities in each of the NYSE Indexes drops by ⅓rd or more; (ii) 10% or more of the weight of each of the NYSE Indexes is represented by component securities having a market value of less than $75 million; (iii) less than 80% of the weight of each of the NYSE Indexes is represented by component securities that are eligible for options trading pursuant to ISE Rule 502; (iv) 10% or more of the weight of each of the NYSE Indexes is represented by component securities trading less than 20,000 shares per day; or (v) the largest component security accounts for more than 15% of the weight of each of the NYSE Indexes or the largest five components in the aggregate account for more than 40% of the weight of each of the NYSE Indexes.

The Exchange will notify the Market Regulation Division of the Commission immediately in the event Dow Jones determines to cease maintaining or calculating the NYSE Indexes. In the event any of the NYSE Indexes ceases to be maintained or calculated, the Exchange may determine not to list any additional series for trading or limit all transactions in such options to closing transactions only for the purpose of maintaining a fair and orderly market and protecting investors.

*Contract Specifications*

The contract specifications for both Mini Index Options and Micro Index Options for each of the NYSE Indexes are set forth in Exhibit 3 to the proposal. The NYSE U.S. 100, the NYSE International 100 and the NYSE World Leaders Indexes are each broad-based, as defined in Exchange Rule 2001(j).[13] The NYSE TMT Index is a narrow-based index, as defined in Exchange Rule 2001(i).[14] Options on the NYSE Indexes are European-style and A.M. cash-settled. The Exchange's standard trading hours for index options (9:30 a.m. to 4:15 p.m., New York time), as set forth in Rule 2008(a), will apply to the NYSE Indexes. Exchange rules that are applicable to the trading of options on both broad-based indexes and narrow-based indexes will apply to the trading of Mini Index Options and Micro Index Options.[15] Specifically, the trading of Mini Index Options and Micro Index Options on the NYSE Indexes will be subject to, among others, Exchange rules governing sales practice rules, margin requirements, trading rules, and position and exercise limits.

For each of the broad-based NYSE Indexes, the Exchange proposes to establish aggregate position and exercise limits for Mini Index Options at 50,000 contracts on the same side of the market, provided no more than 30,000 of such contracts are in the nearest expiration month series. The Mini Index Options contracts shall be aggregated with Micro Index Options contracts, where ten (10) Micro Index Options contracts equal one (1) Mini Index Options contract. For the narrow-based index, the aggregate position and exercise limits shall be as set forth under Rule 2005(a)(3).

The Exchange proposes to apply index margin requirements for the purchase and sale of options on the NYSE Indexes. Accordingly, purchases of put or call options with 9 months or less until expiration must be paid for in full. Writers of uncovered put or call options must deposit/maintain 100% of the option proceeds, plus 15% of the aggregate contract value (current Index level × $100), less any out-of-the-money amount, subject to a minimum of the option proceeds plus 10% of the aggregate contract value for call options and a minimum of the option proceeds plus 10% of the aggregate exercise price amount for put options.

The Exchange proposes to set strike price intervals at 2½ points for certain near-the-money series in near-term expiration months when each of the NYSE Indexes is at a level below 200, and 5 point strike price intervals for other options series with expirations up to one year, and 25 to 50 point strike price intervals for longer-term options. Accordingly, since the current Mini Index Options level for each of the NYSE Indexes is 576.38, 450.57, 527.34 and 506.09, the Exchange shall set strike price intervals at 5 points for the Mini Index Options. Since the current Micro Index Options level for each of the NYSE Indexes is 57.64, 45.06, 52.73 and 50.61, the Exchange shall set strike price intervals at 2½ points for the Micro Index Options. The minimum tick size

[10] The aggregate exercise value of the option contract is calculated by multiplying the Index value by the Index multiplier, which is 100.

[11] For any given expiration month, options on the NYSE Indexes will expire on the third Saturday of the month.

[12] Telephone conversation between Samir Patel, Assistant General Counsel, ISE, and A. Michael Pierson, Attorney, Division, Commission (March 21, 2005).

[13] ISE Rule 2001(j) defines a ''market index'' or a ''broad-based index'' to mean an index designed to be representative of a stock market as a whole or of a range of companies in unrelated industries.

[14] ISE Rule 2001(i) defines an ''industry index'' or a ''narrow-based index'' to mean an index designed to be representative of a particular industry or a group of related industries.

[15] *See* ISE Rules 2000 through 2012.

for series trading below $3 shall be 0.05, and for series trading at or above $3 shall be 0.10.

The Exchange proposes to list Mini Index Options and Micro Index Options in the three consecutive near-term expiration months plus up to three successive expiration months in the March cycle. For example, consecutive expirations of January, February, March, plus June, September, and December expirations would be listed.[16] In addition, long-term option series (''LEAPS'') having up to 36 months to expiration may be traded.[17] The interval between expiration months on the Mini Index Options or Micro Index Options shall not be less than six months. The trading of any LEAPS on Micro Index Options and Mini Index Options shall be subject to the same rules that govern the trading of all the Exchange's index options, including sales practice rules, margin requirements, trading rules, and position and exercise limits.

Except for the further reduced value given to the Micro Index Options, all of the specifications and calculations for the Micro Index Options shall be the same as those used for the Mini Index Options. The Micro Index Options will trade independently of and in addition to the Mini Index Options, and both products shall be subject to the same rules that presently govern the trading of Exchange index options, including sales practice rules, margin requirements, trading rules, and position and exercise limits.

*Surveillance and Capacity*

The Exchange represents that it has an adequate surveillance program in place for options traded on the NYSE Indexes, and intends to apply those same program procedures that it applies to the Exchange's other index options. Additionally, the Exchange is a member of the Intermarket Surveillance Group (''ISG'') under the Intermarket Surveillance Group Agreement, dated June 20, 1994. The members of the ISG include all of the U.S. registered stock and options markets: the American Stock Exchange, the Boston Stock Exchange, the Chicago Board Options Exchange, the Chicago Stock Exchange, the National Stock Exchange, the National Association of Securities Dealers, the New York Stock Exchange, the Pacific Stock Exchange and the Philadelphia Stock Exchange. The ISG members work together to coordinate surveillance and investigative information sharing in the stock and options markets. In addition, the major futures exchanges are affiliated members of the ISG, which allows for the sharing of surveillance information for potential intermarket trading abuses.

The Exchange represents that it has the system capacity to adequately handle all series that would be permitted to be added by this proposal (including LEAPS). The Exchange provided to the Commission information in a confidential submission that supports its system capacity representations.

2. Statutory Basis

The Exchange believes that the proposed rule change is consistent with section 6(b) of the Act,[18] in general, and furthers the objectives of section 6(b)(5),[19] in particular, in that it will permit trading in both Mini Index Options and Micro Index Options pursuant to rules designed to prevent fraudulent and manipulative acts and practices and promote just and equitable principals of trade.

*B. Self-Regulatory Organization's Statement on Burden on Competition*

The ISE believes that the proposed rule change does not impose any burden on competition.

*C. Self-Regulatory Organization's Statement on Comments on the Proposed Rule Change Received From Members, Participants or Others*

The Exchange has not solicited, and does not intend to solicit, comments on this proposed rule change. The Exchange has not received any unsolicited written comments from members or other interested parties.

**III. Date of Effectiveness of the Proposed Rule Change and Timing for Commission Action**

Within 35 days of the date of publication of this notice in the **Federal Register** or within such longer period (i) as the Commission may designate up to 90 days of such date if it finds such longer period to be appropriate and publishes its reasons for so finding or (ii) as to which the self-regulatory organization consents, the Commission will:

A. By order approve such proposed rule change; or

B. Institute proceedings to determine whether the proposed rule change should be disapproved.

**IV. Solicitation of Comments**

Interested persons are invited to submit written data, views, and arguments concerning the foregoing, including whether the proposed rule change is consistent with the Act. Comments may be submitted by any of the following methods:

*Electronic Comments*

- Use the Commission's Internet comment form *http://www.sec.gov/rules/sro.shtml*); or
- Send an E-mail to *rule-comments@sec.gov.* Please include File No. SR-ISE–2004–27 on the subject line.

*Paper Comments*

- Send paper comments in triplicate to Jonathan G. Katz, Secretary, Securities and Exchange Commission, 450 Fifth Street, NW., Washington, DC 20549–0609.

All submissions should refer to File Number SR-ISE–2004–27. This file number should be included on the subject line if e-mail is used. To help the Commission process and review your comments more efficiently, please use only one method. The Commission will post all comments on the Commissions Internet Web site (*http://www.sec.gov/rules/sro.shtml*). Copies of the submission, all subsequent amendments, all written statements with respect to the proposed rule change that are filed with the Commission, and all written communications relating to the proposed rule change between the Commission and any person, other than those that may be withheld from the public in accordance with the provisions of 5 U.S.C. 552, will be available for inspection and copying in the Commission's Public Reference Room. Copies of such filing also will be available for inspection and copying at the principal office of the ISE. All comments received will be posted without change; the Commission does not edit personal identifying information from submissions. You should submit only information that you wish to make available publicly. All submissions should refer to File Number SR-ISE–2004–27 and should be submitted by April 19, 2005.

[16] *See* ISE Rule 2009(a)(3).

[17] *See* ISE Rule 2009(b)(1). The Exchange is not listing reduced value LEAPS on either of the Reduced Value NYSE Indexes or Reduced Value Micro NYSE Indexes pursuant to ISE Rule 2009(b)(2). Telephone conversation between Samir Patel, Assistant General Counsel, ISE, and A. Michael Pierson, Attorney, Division, Commission (March 8, 2005).

[18] 15 U.S.C. 78f(b).

[19] 15 U.S.C. 78f(b)(5).

For the Commission, by the Division of Market Regulation, pursuant to delegated authority.[20]

**J. Lynn Taylor,**

*Assistant Secretary.*

[FR Doc. E5–1380 Filed 3–28–05; 8:45 am]

BILLING CODE 8010–01–P

## SECURITIES AND EXCHANGE COMMISSION

**[Release No. 34–51420; File No. SR–NASD–2005–003]**

## Self-Regulatory Organizations; Order Granting Approval to Proposed Rule Change To Amend Rule 4350(n) and IM–4350–7 To Conform the Time Frame for the Disclosure of a Waiver to a Company's Code of Conduct to the Time Frame Required for Similar Disclosure by the Commission's Form 8–K

March 23, 2005.

On January 12, 2005, the National Association of Securities Dealers, Inc. (''NASD''), through its subsidiary, the Nasdaq Stock Market, Inc. (''Nasdaq''), filed with the Securities and Exchange Commission (''Commission''), pursuant to section 19(b)(1) of the Securities Exchange Act of 1934 (''Act'')[1] and Rule 19b–4 thereunder,[2] a proposed rule change to amend NASD Rule 4350 and related interpretive material to conform the time frame for the disclosure of a waiver to a company's code of conduct to the time frame required for similar disclosure by the Commission's Form 8–K. The proposed rule change was published for comment in the **Federal Register** on February 18, 2005.[3] The Commission received no comments on the proposal.

NASD Rule 4350(n) and interpretive material IM–4350–7 require issuers listed on Nasdaq to adopt codes of conduct that are applicable to all directors, officers, and employees. Each code of conduct must require that any waiver of the code for executive officers or directors may be made only by the board of directors of the issuer and must be disclosed to shareholders, along with the reasons for the waiver. The rule specifies that issuers (other than foreign private issuers) must disclose such waivers in a Form 8–K within five business days. The proposed rule change would amend the rule and interpretive material to require such disclosure within four business days.

The Commission finds that the proposed rule change is consistent with the requirements of the Act and the rules and regulations thereunder applicable to a national securities association,[4] and, in particular, the requirements of section 15A(b)(6) of the Act.[5] The Commission believes that the proposed timing for disclosure of waivers is consistent with similar requirements of Commission rules concerning disclosure of waivers by issuers (other than foreign private issuers) for principal executive, financial, and accounting officers.[6]

*It is therefore ordered,* pursuant to section 19(b)(2) of the Act,[7] that the proposed rule change (File No. SR–NASD–2005–003) be, and it hereby is, approved.

For the Commission, by the Division of Market Regulation, pursuant to delegated authority.[8]

**J. Lynn Taylor,**

*Assistant Secretary.*

[FR Doc. E5–1385 Filed 3–28–05; 8:45 am]

BILLING CODE 8010–01–P

## SECURITIES AND EXCHANGE COMMISSION

**[Release No. 34–51419; File No. SR–Phlx–2005–11]**

## Self-Regulatory Organizations; Order Approving Proposed Rule Change by the Philadelphia Stock Exchange, Inc. and Notice of Filing and Order Granting Accelerated Approval to Amendment No. 1 Relating to an Amendment to Its By-Laws To Replace an On-Floor Equity Governor Position With an On-Floor Philadelphia Board of Trade Governor Position

March 23, 2005.

### I. Introduction

On January 31, 2005, the Philadelphia Stock Exchange, Inc. (''Phlx'' or the ''Exchange'') filed with the Securities and Exchange Commission (''SEC'' or ''Commission''), pursuant to section 19(b)(1) of the Securities Exchange Act of 1934 (''Act'')[1] and Rule 19b–4 thereunder,[2] a proposed rule change to amend its By-laws to replace an On-Floor Equity Governor position on the Exchange's Board of Governors with an On-Floor Philadelphia Board of Trade, Inc. (''PBOT'') Governor position. On March 17, 2005, the Exchange filed Amendment No. 1 to the proposed rule change.[3] The proposed rule change was published in the **Federal Register** on February 9, 2005.[4] No comment letters were received on the proposal. This order approves the proposed rule change, as amended, and grants accelerated approval to Amendment No. 1.

### II. Description of the Proposal

Under the proposal, Article IV, Section 4–1 of the Phlx's By-laws would be amended to change the composition of the Phlx's Board of Governors. Currently, two of the On-Floor Governors must be industry Governors who are members primarily engaged in business on the Exchange's Equity Floor or general partners, executive officers (vice president and above) or members associated with member organizations primarily engaged in business on the Exchange's Equity Floor. The Exchange proposes to replace one of these On-Floor Equity Governor positions with an On-Floor PBOT Governor position. Any On-Floor PBOT Governor must be a member of PBOT, which is a subsidiary of the Exchange.

In addition, Article III, Sections 3–6 of the Phlx's By-laws would be amended to provide that recommendations for the PBOT Governor candidate would be submitted to the Exchange's Nominating and Elections Committee by the PBOT Board of Governors.

The Exchange believes that the revised Board of Governors composition, with a PBOT representative Governor, more accurately represents the strategic ownership and on-going business interests of the Exchange, while still affording appropriate proportional representation of On-Floor Governors—with three On-Floor Equity Options Governors, one On-Floor Equity Governor and one On-Floor PBOT Governor.

[20] 17 CFR 200.30–3(a)(12).

[1] 15 U.S.C. 78s(b)(1).

[2] 17 CFR 240.19b–4.

[3] *See* Securities Exchange Act Release No. 51197 (February 14, 2005), 70 FR 8414 (February 18, 2005).

[4] In approving this proposed rule change, the Commission notes that it has considered the proposed rule's impact on efficiency, competition, and capital formation. 15 U.S.C. 78c(f).

[5] 15 U.S.C. 78o–3(b)(6).

[6] Item 406(a) of Regulations S–K and S–B (17 CFR 229.406(a) and 228.406(a)) requires an issuer to disclose whether the issuer has adopted a code of ethics that applies to its principal executive officer, principal financial officer, principal accounting officer or controller, or persons performing similar functions. Issuers are also required to disclose waivers of the code that are granted to those individuals. *See* Item 5.05(b) of Form 8–K (17 CFR 249.308). Recent amendments to Form 8–K shorten the time frame for this disclosure from five business days to four business days. *See* Securities Act Release No. 8400 (March 16, 2004), 69 FR 15594 (March 25, 2004). These amendments were effective August 23, 2004.

[7] 15 U.S.C. 78s(b)(2).

[8] 17 CFR 200.30–3(a)(12).

[1] 15 U.S.C. 78s(b)(1).

[2] 17 CFR 240.19b–4.

[3] In Amendment No. 1, the Exchange revised the statutory basis section of the proposed rule change.

[4] *See* Securities Exchange Act Release No. 51127 (February 2, 2005), 70 FR 6918.

## III. Discussion and Commission Findings

After careful review, the Commission finds that the proposed rule change, as amended, is consistent with the requirements of the Act and the rules and regulations thereunder applicable to a national securities exchange[5] and, in particular, the requirements of section 6 of the Act.[6] Specifically, the Commission finds that the proposal to convert an On-Floor Equity Governor position into an On-Floor PBOT Governor position is consistent with section 6(b)(3) of the Act,[7] which, among other things, requires that an exchange assure a fair representation of members in the selection of its directors and administration of its affairs.[8]

The Phlx's Board of Governors is currently composed of the Chairman of the Board of Governors and 21 other Governors. Five Governors (*i.e.,* the On-Floor Governors) are required to be representatives of the Exchange's trading floor—three from the options trading floor and two from the equities trading floor. Although the proposal would convert one On-Floor Equity Governor position into an On-Floor PBOT Governor position, there still would be three On-Floor Equity Options Governors and one On-Floor Equity Governor on the Phlx's Board of Governors. In addition, the proposal would not alter the right of Phlx members, through their member organization representatives, to vote on the nominees for the On-Floor Governor positions, including the On-Floor PBOT Governor.[9] Moreover, the proposal would not interfere with Phlx members' right to submit independent nominations for the On-Floor Governor positions, including the On-Floor PBOT Governor. Although recommendations for the PBOT Governor position would be submitted to the Phlx's Nominating and Elections Committee by the PBOT Board of Governors, Phlx members, through their member organization representatives, can independently nominate by written petition candidates for On-Floor Governor positions, which would include the PBOT Governor position.[10] Therefore, in the Commission's view, the proposal is consistent with the Act's requirement that the Exchange assure the fair representation of its members in the selection of the Exchange's directors.

The Commission finds good cause for approving Amendment No. 1 to the proposed rule change prior to the thirtieth day after the date of the publication of notice thereof in the **Federal Register**. The Commission notes that the amendment simply corrected a reference to a section of the Act that was contained in the original filing. The Commission therefore believes that it is appropriate to accelerate approval of the amendment so that the proposed rule change may be implemented on a timely basis.

## IV. Solicitation of Comments

Interested persons are invited to submit written data, views, and arguments concerning the foregoing, including whether the proposed rule change, as amended, is consistent with the Act. Comments may be submitted by any of the following methods:

*Electronic Comments*

- Use the Commission's Internet comment form (*http://www.sec.gov/rules/sro.shtml*); or
- Send an e-mail to *rule-comments@sec.gov.* Please include File Number SR–Phlx–2005–11 on the subject line.

*Paper Comments*

- Send paper comments in triplicate to Jonathan G. Katz, Secretary, Securities and Exchange Commission, 450 Fifth Street, NW., Washington, DC 20549–0609.

All submissions should refer to File Number SR–Phlx–2005–11. This file number should be included on the subject line if e-mail is used. To help the Commission process and review your comments more efficiently, please use only one method. The Commission will post all comments on the Commission's Internet Web site (*http://www.sec.gov/rules/sro.shtml*). Copies of the submission, all subsequent amendments, all written statements with respect to the proposed rule change, as amended, that are filed with the Commission, and all written communications relating to the proposed rule change, as amended, between the Commission and any person, other than those that may be withheld from the public in accordance with the provisions of 5 U.S.C. 552, will be available for inspection and copying in the Commission's Public Reference Room. Copies of such filing also will be available for inspection and copying at the principal office of the Phlx. All comments received will be posted without change; the Commission does not edit personal identifying information from submissions. You should submit only information that you wish to make available publicly. All submissions should refer to File Number SR–Phlx–2005–11 and should be submitted on or before April 19, 2005.

## V. Conclusion

For the foregoing reasons, the Commission finds that the proposed rule change, as amended, is consistent with the Act and the rules and regulations thereunder applicable to a national securities exchange, and, in particular, with section 6(b)(3) of the Act.[11]

*It is therefore ordered,* pursuant to section 19(b)(2) of the Act,[12] that the proposed rule change (SR–Phlx–2005–11), as amended, is approved, and Amendment No. 1 is approved on an accelerated basis.

For the Commission, by the Division of Market Regulation, pursuant to delegated authority.[13]

**J. Lynn Taylor,**

*Assistant Secretary.*

[FR Doc. E5–1384 Filed 3–28–05; 8:45 am]

BILLING CODE 8010–01–P

[5] The Commission has considered the proposed rule change's impact on efficiency, competition, and capital formation. 15 U.S.C. 78c(f).

[6] 15 U.S.C. 78f.

[7] 15 U.S.C. 78f(b)(3).

[8] To the extent that the proposed rule change runs counter to the Commission's recent governance and transparency proposals, Securities Exchange Act Release No. 50699 (November 18, 2004), 69 CFR 71125 (December 8, 2004), the Phlx represents that upon adoption of final rulemaking the Phlx will conform its By-laws accordingly. Telephone conversation among Scott Donnini, Vice President, Phlx, Nancy Sanow, Assistant Director, Division of Market Regulation (''Division''), Commission, Gordon Fuller, Counsel to the Assistant Director, Division, Commission and Geraldine Idrizi, Attorney, Division, Commission, on January 26, 2005.

[9] As a result of the Exchange's recent demutualization, Phlx members, through their member organization's designated representative, vote on the nominees for the On-Floor Governor positions and the nominees that are selected by members must be elected by the holder of Phlx's Series A preferred stock. *See* Phlx By-laws, Article III, Section 3–2.

[10] *See* Phlx By-laws, Article III, Section 3–7.

[11] 15 U.S.C. 78f(b)(3).

[12] 15 U.S.C. 78f(b)(2).

[13] 17 CFR 200.30–3(a)(12).

## SMALL BUSINESS ADMINISTRATION

**[Disaster Declaration # 10081]**

## Alaska Disaster # AK–00002 Disaster Declaration

**AGENCY:** U.S. Small Business Administration.

**ACTION:** Notice.

**SUMMARY:** This is a Notice of the Presidential declaration of a major disaster for Public Assistance Only for the State of Alaska (FEMA–1584–DR ), dated 03/14/2005.

*Incident:* Severe Winter Storm.

*Incident Period:* 01/07/2005 through 01/12/2005.

*Effective Date:* 03/14/2005.

*Physical Loan Application Deadline Date:* 05/13/2005.

**ADDRESSES:** Submit completed loan applications to: U.S. Small Business Administration, Disaster Area Office 4, P.O. Box 419004, Sacramento, CA 95841.

**FOR FURTHER INFORMATION CONTACT:** A. Escobar, Office of Disaster Assistance, U.S. Small Business Administration, 409 3rd Street, Suite 6050, Washington, DC 20416.

**SUPPLEMENTARY INFORMATION:** Notice is hereby given that as a result of the President's major disaster declaration on 03/14/2005, applications for Private Non-Profit organizations that provide essential services of a governmental nature may file disaster loan applications at the address listed above or other locally announced locations.

The following areas have been determined to be adversely affected by the disaster:

*Primary Counties:* North Slope Borough.

The Interest Rates are:

| | Percent |
|---|---|
| Other (Including Non-Profit Organizations) with Credit Available Elsewhere | 4.750 |
| Businesses and Non-Profit Organizations without Credit Available Elsewhere | 4.000 |

The number assigned to this disaster for physical damage is 10081B.

(Catalog of Federal Domestic Assistance Number 59008.)

**Herbert L. Mitchell,**

*Associate Administrator for Disaster Assistance.*

[FR Doc. 05–6151 Filed 3–28–05; 8:45 am]

**BILLING CODE 8025–01–P**

## SMALL BUSINESS ADMINISTRATION

**[Disaster Declaration # 10080]**

### Nevada Disaster # NV–00002 Disaster Declaration

**AGENCY:** Small Business Administration.

**ACTION:** Notice.

**SUMMARY:** This is a Notice of the Presidential declaration of a major disaster for Public Assistance Only for the State of Nevada (FEMA–1583–DR), dated 03/07/2005.

*Incident:* Heavy rains and flooding.

*Incident Period:* 01/07/2005 through 01/13/2005.

**DATES:** *Effective Date:* 03/07/2005.

*Physical Loan Application Deadline Date:* 05/06/2005.

**ADDRESSES:** Submit completed loan applications to: U.S. Small Business Administration, Disaster Area Office 1, 360 Rainbow Blvd. South, 3rd floor, Niagara Falls, NY 14303.

**FOR FURTHER INFORMATION CONTACT:** A. Escobar, Office of Disaster Assistance, U.S. Small Business Administration, 409 3rd Street, Suite 6050, Washington, DC 20416.

**SUPPLEMENTARY INFORMATION:** Notice is hereby given that as a result of the President's major disaster declaration on 03/07/2005, applications for Private Non-Profit organizations that provide essential services of a governmental nature may file disaster loan applications at the address listed above or other locally announced locations.

The following areas have been determined to be adversely affected by the disaster:

Primary Counties: Clark Lincoln.

The Interest Rates are:

| | Percent |
|---|---|
| Other (Including Non-Profit Organizations) With Credit Available Elsewhere | 4.750 |
| Businesses and Non-Profit Organizations Without Credit Available Elsewhere | 4.000 |

The number assigned to this disaster for physical damage is 100806.

(Catalog of Federal Domestic Assistance Number 59008.)

**Herbert L. Mitchell,**

*Associate Administrator for Disaster Assistance.*

[FR Doc. 05–6150 Filed 3–28–05; 8:45 am]

**BILLING CODE 8025–01–P**

## SMALL BUSINESS ADMINISTRATION

**[Disaster Declaration #10029 and #10030]**

### Ohio Disaster Number OH–00002

**AGENCY:** U.S. Small Business Administration.

**ACTION:** Amendment 2.

**SUMMARY:** This is an amendment of the Presidential declaration of a major disaster for the State of Ohio (FEMA–1580–DR), dated February 15, 2005.

*Incident:* Severe Winter Storms, Flooding, and Mudslides.

*Incident Period:* December 22, 2004 through February 1, 2005.

**DATES:** *Effective Date:* March 18, 2005.

*Physical Loan Application Deadline Date:* April 18, 2005.

*EIDL Loan Application Deadline Date:* November 15, 2005.

**ADDRESSES:** Submit completed loan applications to: U.S. Small Business Administration, Disaster Area Office 1, 360 Rainbow Blvd. South 3rd Floor, Niagara Falls, NY 14303.

**FOR FURTHER INFORMATION CONTACT:** A. Escobar, Office of Disaster Assistance, U.S. Small Business Administration, 409 3rd Street, Suite 6050, Washington, DC 20416.

**SUPPLEMENTARY INFORMATION:** The notice of the Presidential disaster declaration for the State of Ohio dated February 15, 2005, is hereby amended to include the following areas as adversely affected by the disaster.

Primary Counties: Ashland, Auglaize, Huron, Miami, Yandot.

Contiguous Counties: Ohio; Allen, Erie, Lorain, Medina, Sandusky, Van Wert.

All other information in the original declaration remains unchanged.

(Catalog of Federal Domestic Assistance Numbers 59002 and 59008)

**Herbert L. Mitchell,**

*Associate Administrator for Disaster Assistance.*

[FR Doc. 05–6149 Filed 3–28–05; 8:45 am]

**BILLING CODE 8025–01–P**

## OFFICE OF THE UNITED STATES TRADE REPRESENTATIVE

### Generalized System of Preferences (GSP): Import Statistics Relating to Competitive Need Limitations; Invitation for Public Comment on Possible De Minimis Waivers and Redesignations

**AGENCY:** Office of the United States Trade Representative.

**ACTION:** Notice.

**SUMMARY:** This notice is to inform the public of full year 2004 import statistics relating to competitive need limitations (CNLs) under the Generalized System of Preferences (GSP) program. Public comments are invited by 5 p.m., April 22, 2005, regarding possible *de minimis* CNL waivers with respect to particular articles, and possible redesignations under the FSP program of articles currently not eligible for GSP benefits because they previously exceeded the CNLs.

**FOR FURTHER INFORMATION CONTACT:** Contact the GSP Subcommittee of the Trade Policy Staff Committee, Office of the United States Trade Representative, 1724 F Street, NW., Room F–220, Washington, DC 20508. The telephone number is (202) 395–6971.

**SUPPLEMENTARY INFORMATION:**

## I. Competitive Need Limitations

The GSP program provides for the duty-free importation of designated articles when imported from designated beneficiary developing countries (BDCs). The GSP program is authorized by title V of the Trade Act of 1974 (19 U.S.C. 2461, *et seq.*), as amended (the ''1974 Act''), and is implemented in accordance with Executive Order 11888 of November 24, 1975, as modified by subsequent Executive Orders and Presidential Proclamations.

Section 503(c)(2)(A) of the 1974 Act sets out the two competitive need limitations (CNLs). When the President determines that a BDC exported to the United States during a calendar year either (1) a quantity of a GSP-eligible article having a value in excess of the applicable amount for that year ($115 million for 2004), or (2) a quantity of a GSP-eligible article having a value equal to or greater than 50 percent of the value of total U.S. imports of the article from all countries (the ''50 percent CNL''), the President must terminate GSP duty-free treatment for that article from that BDC by no later than July 1 of the next calendar year.

Under section 503(c)(2)(F) of the 1974 Act, the President may waive the 50 percent CNL with respect to an eligible article imported from a BDC if the value of total imports of that article from all countries during the calendar year did not exceed the applicable *de minimis* amount for that year ($17 million for 2004).

Under section 503(c)(2)(C) of the 1974 Act, if imports of an eligible article from a BDC ceased to receive duty-free treatment due to exceeding a CNL in a prior year, the President may redesignate such an article for duty-free treatment if imports in the most recently completed calendar year did not exceed the CNLs.

## II. Implementation of Competitive Need Limitations, Waivers, and Redesignations

Exclusions from GSP duty-free treatment where CNLs have been exceeded will be effective July 1, 2005, unless granted a waiver by the President. CNL exclusions, as well as decisions with respect to *de minimis* waivers and redesignations, will be based on full 2004 calendar year import statistics.

## III. 2004 Import Statistics

In order to provide notice of articles that have exceeded the CNLs for 2004, and to afford an opportunity for comment regarding potential *de minimis* waivers and redesignations, import statistics for 2004 are included with this notice. Full calendar year 2004 data for individual tariff subheadings may be viewed on the Web site of the U.S. International Trade Commission at *http://dataweb.usitc.gov/*.

The following lists contain, for each article, the Harmonized Tariff Schedule of the United States (HTSUS) subheading and BDC country of origin, the value of imports of the article for calendar year 2004, and the percentage of total imports of that article from all countries. The flags indicate the status of GSP eligibility. Articles marked with an ''*'' are those that have been excluded from GSP eligibility for the entire past calendar year. Articles marked with a ''D'' are those that, based on 2004 data, may be eligible for a *de minimus* waiver of the 50 percent CNL.

List I shows GSP-eligible articles from BDCs that exceeded the CNL by having been exported in excess of $115 million, or by an amount greater than 50% of the total U.S. import value in 2004. Those articles without a flag were GSP-eligible during 2004 but stand to lose GSP duty-free treatment on July 1, 2005, unless a waiver is granted. Such waivers are required to have been previously requested in the 2004 GSP Annual Review.

List II is a subset of List I. List II identifies GSP-eligible articles from BDCs that are above the 50 percent CNL, but that are eligible for a *de minimis* waiver of the 50 percent CNL. Each year, *de minimis* waivers are considered automatically without a petition, and public comments are invited.

List III shows GSP-eligible articles from certain BDCs that are currently not receiving GSP duty-free treatment, but that may be considered for redesignation based on 2004 trade data. Recommendations to the President on redesignations are normally made with any recommendations resulting from the annual review, and public comments are invited.

The attached lists are computer-generated and may not include all articles to which the GSP CNLs may apply. All determinations and decisions regarding the CNLs of the GSP program are based on full calendar year 2004 import data with respect to each GSP-eligible article. Each interested party is advised to conduct its own review of 2004 import data with regard to the possible application of GSP CNLs.

## IV. Public Comments

### *Requirements for Submissions*

All submissions must conform to the GSP regulations set forth at 15 CFR part 2007, except as modified below. Furthermore, each party providing comments should indicate on the first page of the submission its name, the relevant HTSUS subheading(s), the BDC of interest, and the type of action (*e.g., de minimis* waiver or redesignation) in which the party is interested.

Comments must be submitted, in English, to the Chairman of the GSP Subcommittee of the Trade Policy Staff Committee (TPSC) as soon as possible, but no later than 5 p.m., April 22, 2005. Comments submitted after this date may be considered at the discretion of the GSP Subcommittee until the time its advice is provided to the TPSC.

In order to facilitate prompt consideration of submissions, USTR strongly urges and prefers electronic e-mail submissions in response to this notice. Hand-delivered submissions will not be accepted. Submissions should be single-copy transmissions in English with the total submission not to exceed 50 single-spaced standard letter-size pages and 3 megabytes as a digital file attached to an e-mail transmission. The e-mail transmission should use the following subject line: ''Comments on 2004 CNL Review,'' followed by the HTSUS subheading number and BDC country of origin as set out in the appropriate list. Documents must be submitted as either WordPerfect (''.wpd''), MSWord (''.doc''), or text (''.txt'') files. Documents submitted as electronic image files or containing imbedded images (for example, ''.jpg'', ''.pdf'', ''.bmp'', or ''.gif'' files) will not be accepted. Spreadsheets submitted as supporting documentation are acceptable as QuattroPro or Excel, pre-formatted for printing on 8½ x 11 inch paper. To the extent possible, any data attachments to the submission should be included in the same file as the submission itself, and not as separate files.

Submissions in response to this notice will be subject to public inspection by appointment with the staff of the USTR Public Reading Room, except for information granted ''business confidential'' status pursuant to 15 CFR 2003.6.

If the submission contains business confidential information, a non-confidential version of the submission must also be submitted that indicates where confidential information was redacted by inserting asterisks where material was deleted. In addition, the confidential version must be clearly marked ''BUSINESS CONFIDENTIAL'' at the top and bottom of each page of the document. The non-confidential version must be clearly marked ''PUBLIC'' or ''NON-CONFIDENTIAL'' at the top and

bottom of each page. Documents that are submitted without any marking might not be accepted or will be considered public documents.

For any document containing business confidential information submitted as an electronic attached file to an e-mail transmission, the file name of the business confidential version should begin with the characters ''BC-'', and the file name of the public version should begin with the character ''P-''. The ''BC-'' or ''P-'' should be followed by the name of the party (government, company, union, association, etc.) which is submitting the comments.

E-mail submissions should not include separate cover letters or messages in the message area of the e-mail; information that might appear in any cover letter should be included directly in the attached file containing the submission itself, including the sender's identifying information with telephone number, FAX number, and e-mail address. The e-mail address for these submissions is *FR0441@USTR.GOV*. Documents not submitted in accordance with these instructions might not be considered in this review. If unable to provide submissions by e-mail, please contact the GSP Subcommittee to arrange for an alternative method of transmission.

Public version of all documents relating to this review will be available for public review approximately two weeks after the due date by appointment in the USTR Public Reading Room, 1724 F Street, NW., Washington, DC. Availability of documents may be ascertained, and appointments may be made from 9:30 a.m. to noon and 1 p.m. to 4 p.m., Monday through Friday, by calling 202–395–6186.

**Jon Rosenbaum,**

*Acting Executive Director for GSP, GSP Subcommittee of the Trade Policy Staff Committee.*

**BILLING CODE 3190–W5–M**

LIST I: GSP COUNTRIES EXCEEDING COMPETITIVE NEED LIMITS
INCLUDING NEW EXCLUSIONS(N) AND 2004 TRADE

| new | excl | htsus | partner | imports | share | description |
|---|---|---|---|---|---|---|
| | * | 06031070 | Colomb | 98,093,522 | 90.6 | Chrysanthemums, standard carnations, anthuriums and orchids, fresh cut |
| N | | 06031080 | Colomb | 115,305,852 | 37.3 | Cut flowers and flower buds suitable for bouquets or ornamental purposes, fresh cut, nesi |
| | * | 07092010 | Peru | 19,855,664 | 94.6 | Asparagus, fresh or chilled, not reduced in size, if entered September 15 to November 15, inclusive, and transported to the U.S. by air |
| | * | 07141020 | C Rica | 18,894,250 | 96.2 | Cassava (manioc), fresh, chilled or dried, whether or not sliced or in the form of pellets |
| N | | 08045080 | Phil R | 11,674,130 | 54.6 | Guavas, mangoes, and mangosteens, dried |
| | * | 08131000 | Turkey | 41,257,469 | 96.5 | Apricots, dried |
| | * | 16025020 | Brazil | 109,926,616 | 78.9 | Prepared or preserved beef in airtight containers, other than corned beef, not containing cereals or vegetables |
| | C | 17039050 | Dom Rep | 11,833,614 | 52.3 | Molasses nesi |
| | * | 24021080 | Dom Rep | 182,491,169 | 66.5 | Cigars, cheroots and cigarillos containing tobacco, each valued 23 cents or over |
| | G | 28259015 | Brazil | 5,928,887 | 42.7 | Niobium oxide |
| | * | 29051120 | Trinid | 464,645,717 | 44.8 | Methanol (Methyl alcohol), other than imported only for use in producing synthetic natural gas (SNG) or for direct use as fuel |
| | G | 29054200 | Brazil | 1,210,049 | 11.8 | Pentaerythritol |
| | * | 29061100 | India | 15,274,397 | 56.6 | Menthol |
| | * | 29242116 | Brazil | 11,745,217 | 50.1 | Aromatic ureines and their derivatives pesticides, nesoi |
| | G | 32041220 | India | 2,128,536 | 16.2 | Acid black 61 and other specified acid and mordant dyes and preparations based thereon |
| | G | 32041230 | India | 7,288 | 1.1 | Mordant black 75, blue 1, brown 79, red 81, 84 and preparations based thereon |
| | G | 32041245 | India | 4,337,680 | 17.9 | Acid dyes, whether or not premetallized, and preparations based thereon, described in add'l U.S. note 3 to section VI |
| | G | 32041250 | India | 5,500,782 | 32.3 | Synthetic acid and mordant dyes and preparations based thereon, nesoi |
| | * | 33011200 | Brazil | 21,144,831 | 61.9 | Essential oils of orange |
| | * | 33019010 | India | 15,872,416 | 63.1 | Extracted oleoresins consisting essentially of nonvolatile components of the natural raw plant |
| | G | 39206200 | India | 9,436,029 | 3.2 | Nonadhesive plates, sheets, film, foil and strip, noncellular, not combined with other materials, of polyethylene terephthalate |
| | G | 39206200 | Thailnd | 15,091,012 | 5.2 | Nonadhesive plates, sheets, film, foil and strip, noncellular, not combined with other materials, of polyethylene terephthalate |
| N | | 41071950 | Argent | 14,403,722 | 51.5 | Whole upholstery leather of bovines (not buffalo) nesoi and equines nesoi, without hair on, prepared after tanning or crusting, not 4114 |
| | G | 44121340 | Indnsia | 160,201,375 | 32.5 | Plywood sheets n/o 6 mm thick, with specified tropical wood outer ply, with face ply nesoi, not surface-covered beyond clear/transparent |
| | G | 44121351 | Brazil | 5,124,503 | 8.7 | Plywood sheets n/o 6 mm thick, tropical wood nesoi outer ply, with face ply nesoi, not surface-covered beyond clear/transparent |
| | G | 44121351 | Indnsia | 13,907,481 | 23.7 | Plywood sheets n/o 6 mm thick, tropical wood nesoi outer ply, with face ply nesoi, not surface-covered beyond clear/transparent |
| | G | 44121360 | Indnsia | 1,660,942 | 8.2 | Plywood sheets n/o 6 mm thick, with certain specified tropical wood outer ply, surface covered beyond clear or transparent |
| | G | 44121391 | Brazil | 205,887 | 8.4 | Plywood sheets n/o 6 mm thick, tropical wood nesoi outer ply, surface covered beyond clear or transparent |
| | G | 44121391 | Indnsia | 345,279 | 14.1 | Plywood sheets n/o 6 mm thick, tropical wood nesoi outer ply, surface covered beyond clear or transparent |
| N | | 44121940 | Brazil | 249,969,702 | 55.3 | Plywood of wood sheets, n/o 6 mm thick each, with outer plies of coniferous wood, with face play nesi, not or clear surface covered |
| | G | 44122231 | Brazil | 509,887 | 2.9 | Plywood nesoi, least one hardwood outer ply, w/tropical hardwood ply, not surface-covered beyond clear/transparent, not w/face ply of birch |
| | G | 44122231 | Indnsia | 4,200,990 | 24 | Plywood nesoi, least one hardwood outer ply, w/tropical hardwood ply, not surface-covered beyond clear/transparent, not w/face ply of birch |
| | G | 44122241 | Brazil | 334,111 | 5.1 | Plywood nesoi, at least one hardwood outer ply, w/tropical hardwood ply, surface covered other than clear or transparent |
| | G | 44122241 | Indnsia | 1,627,385 | 24.9 | Plywood nesoi, at least one hardwood outer ply, w/tropical hardwood ply, surface covered other than clear or transparent |
| | G | 44122936 | Brazil | 1,758,211 | 2.7 | Plywood nesoi, at least one hardwood outer ply nesoi, no particle board, not surface-covered beyond clear/transparent, face ply nesoi |
| | G | 44122936 | Indnsia | 5,741,503 | 8.9 | Plywood nesoi, at least one hardwood outer ply nesoi, no particle board, not surface-covered beyond clear/transparent, face ply nesoi |
| | G | 44122946 | Brazil | 306,433 | 5.3 | Plywood nesoi, at least one hardwood outer ply nesoi, no particle board, surface covered other than clear/transparent |
| | G | 44122946 | Indnsia | 1,072,970 | 18.7 | Plywood nesoi, at least one hardwood outer ply nesoi, no particle board, surface covered other than clear/transparent |
| | G | 44219060 | Brazil | 3,280 | 0 | Wooden skewers, candy sticks, ice cream sticks, tongue depressors, drink mixers and similar small wares, other than toothpicks |
| | * | 57029920 | India | 19,264,576 | 83.4 | Carpets & other textile floor coverings, not of pile construction, woven, made up, of other textile materials nesoi |
| | * | 57039000 | India | 34,926,247 | 63.6 | Carpets and other textile floor coverings, tufted, whether or not made up, of other textile materials nesoi |
| N | | 68022110 | Turkey | 16,383,548 | 60.2 | Monumental or building stone & arts. thereof, of travertine, simply cut/sawn, w/flat or even surface |
| N | | 68029120 | Turkey | 35,757,101 | 57.9 | Monumental or building stone & arts. thereof, of travertine, dressed or polished but not further worked, nesoi |
| | C | 68029125 | Turkey | 154,249,342 | 57.1 | Monumental or building stone & arts. thereof, of travertine, further worked than dressed or polished, nesoi |
| | * | 68029300 | Brazil | 233,519,685 | 25.7 | Monumental or building stone & arts. thereof, of granite, further worked than simply cut/sawn, nesoi |
| N | | 68029300 | India | 143,962,887 | 15.8 | Monumental or building stone & arts. thereof, of granite, further worked than simply cut/sawn, nesoi |
| | * | 71131150 | Thailnd | 174,082,909 | 23.2 | Silver articles of jewelry and parts thereof, nesoi, valued over $18 per dozen pieces or parts |
| | * | 71131950 | Dom Rep | 193,524,030 | 3.7 | Precious metal (o/than silver) articles of jewelry and parts thereo, whether or not plated or clad with precious metal,nesoi |
| | G | 72022110 | Brazil | 587,574 | 34.7 | Ferrosilicon containing by weight more than 55% but not more than 80% of silicon and more than 3% of calcium |
| | G | 72022150 | Brazil | 1,386,072 | 0.8 | Ferrosilicon containing by weight more than 55% but not more than 80% of silicon, nesoi |
| | G | 72023000 | Brazil | 92,016 | 0 | Ferrosilicon manganese |
| N | | 72024950 | Russia | 27,333,597 | 51.4 | Ferrochromium containing by weight 3 percent or less of carbon |
| | G | 73072150 | Brazil | 4,726 | 0 | Stainless steel, not cast, flanges for tubes/pipes, not forged or forged and machined, tooled and otherwise processed after forging |
| | G | 73079150 | Brazil | 108,907 | 0.1 | Iron or steel (o/than stainless), not cast, flanges for tubes/pipes, not forged or forged and machined, tooled & processed after forging |
| | * | 74031100 | Peru | 422,391,860 | 21.2 | Refined copper cathodes and sections of cathodes |
| N | | 74081160 | Russia | 131,841,505 | 18.7 | Refined copper, wire, w/maximum cross-sectional dimension over 6 mm but not over 9.5 mm |
| N | | 74081900 | Brazil | 65,406,618 | 53 | Refined copper, wire, w/maximum cross-sectional dimension of 6 mm or less |

FLAGS: 'G' = Graduated; '*' = Excluded full yr; 'D' = Excluded January/June; 'C' = Excluded July/December;

LIST I: GSP COUNTRIES EXCEEDING COMPETITIVE NEED LIMITS
INCLUDING NEW EXCLUSIONS(N) AND 2004 TRADE

| | | | | | | |
|---|---|---|---|---|---|---|
| | * | 81041100 | Russia | 40,449,565 | 51.7 | Magnesium, unwrought, containing at least 99.8 percent by weight of magnesium |
| | C | 81089060 | Russia | 39,836,184 | 59.7 | Titanium, wrought nesoi |
| | * | 84082020 | Brazil | 180,028,758 | 23.4 | Compression-ignition internal-combustion piston engines to be installed in vehicles of heading 8701.20, 8702, 8703, or 8704 |
| N | | 84099991 | Brazil | 123,499,421 | 15.7 | Parts nesi, used solely or principally with the engines of heading 8408, for vehicles of heading 8701.20, 8702, 8703, 8704 |
| N | | 85443000 | Hondura | 161,843,236 | 2.9 | Insulated ignition wiring sets and other wiring sets of a kind used in vehicles, aircraft or ships |
| | * | 90013000 | Indnsia | 127,043,136 | 32.3 | Contact lenses |
| | * | 90091200 | Thailnd | 22,090,220 | 51 | Electrostatic photocopying apparatus, operating by reproducing the original image via an intermediate onto the copy (indirect process) |

FLAGS: 'G' = Graduated; '*' = Excluded full yr; 'D' = Excluded January/June; 'C' = Excluded July/December;

LIST II: GSP COUNTRIES ELIGIBLE FOR De MINIMIS WAIVER
INCLUDING ITEMS FOR WHICH WAVIER WILL NOT BE UTILIZED (N) AND 2004 TRADE

| exc | dem | htsus | partner | imports | share | description |
|---|---|---|---|---|---|---|
| | D | 02023002 | Uruguay | $284,693 | 99.1 | High-qual. beef cuts, boneless, processed, frozen, descr in gen. note 15 of the HTS |
| | D | 03026910 | Phil R | $373,678 | 93.4 | Fish, nesi, excl. fillets, livers and roes, fresh or chilled, scaled, in immediate containers weighing with their contents 6.8 kg or less |
| | D | 03052020 | Russia | $81,000 | 94.8 | Sturgeon roe, dried, smoked, salted or in brine |
| D | D | 04100000 | Indnsia | $9,603,442 | 67.6 | Edible products of animal origin, nesi |
| * | D | 07081020 | Guatmal | $1,801,228 | 54.3 | Peas, fresh or chilled, shelled or unshelled, if entered July 1 to Sept. 30, inclusive, in any year |
| * | D | 07089030 | Ecuador | $727,655 | 94 | Pigeon peas, fresh or chilled, shelled or unshelled, if entered Oct. 1 through the following June 30, inclusive |
| | D | 07102915 | India | $137,329 | 71.4 | Lentils, uncooked or cooked by steaming or boiling in water, frozen |
| * | D | 07102930 | Ecuador | $923,514 | 58.8 | Pigeon peas, uncooked or cooked by steaming or boiling in water, frozen, if entered Oct. 1 through the following June 30, inclusive |
| * | D | 07108093 | Guatmal | $4,005,515 | 81 | Okra, reduced in size, frozen |
| D | D | 07114000 | India | $2,603,454 | 59.4 | Cucumbers including gherkins, provisionally preserved but unsuitable in that state for immediate consumption |
| * | D | 07129030 | Peru | $87,319 | 51.9 | Dried potatoes, whether or not cut or sliced but not further prepared |
| | D | 07129070 | Egypt | $448,493 | 78.1 | Dried fennel, marjoram, savory and tarragon nesi, whole, cut, sliced, broken or in powder, but not further prepared |
| | D | 07139060 | India | $277,679 | 74.3 | Dried leguminous vegetables nesi, shelled, if entered for consumption during the period from May 1 through August 31, inclusive, in any year |
| | D | 07139080 | India | $248,546 | 51.8 | Dried leguminous vegetables nesi, shelled, if entered Sept. 1 through the following April 30, or withdrawn for consumption at any time |
| * | D | 07141010 | C Rica | $8,936,268 | 87.2 | Cassava (manioc), frozen, whether or not sliced or in the form of pellets |
| * | D | 07142020 | Dom Rep | $3,079,776 | 88.9 | Sweet potatoes, fresh, chilled or dried, whether or not sliced or in the form of pellets |
| | D | 08025020 | Turkey | $595,594 | 75.9 | Pistachios, fresh or dried, in shell |
| * | D | 08059001 | Jamaica | $887,000 | 68 | Citrus fruit, nesi, fresh or dried, including kumquats, citrons and bergamots |
| | D | 08106000 | Thailnd | $896,308 | 98.3 | Durians, fresh |
| * | D | 08119010 | C Rica | $7,597,403 | 65.8 | Bananas and plantains, frozen, in water or containing added sweetening |
| * | D | 08119050 | C Rica | $3,684,378 | 64.4 | Pineapples, frozen, in water or containing added sweetening |
| C | D | 08119055 | Guatmal | $1,273,541 | 61.1 | Melons, frozen, in water or containing added sweetening |
| | D | 08134010 | Thailnd | $2,176,992 | 98 | Papayas, dried |
| | D | 08134080 | Thailnd | $1,063,290 | 68.6 | Tamarinds, dried |
| | D | 11023000 | Thailnd | $2,840,742 | 50.3 | Rice flour |
| * | D | 11063020 | Ecuador | $138,348 | 80.8 | Flour, meal and powder of banana and plantain |
| | D | 12021040 | Egypt | $24,510 | 100 | Peanuts (ground-nuts), not roasted or cooked, in shell, subject to add. US note 2 to Ch.12 |
| | D | 13019040 | India | $3,000 | 100 | Turpentine gum (oleoresinous exudate from living trees) |
| | D | 14019040 | Argent | $1,456,227 | 71.5 | Lime bark, raffia, reeds, rushes, cleaned, bleached or dyed cereal straw, other vegetable materials nesi, used primarily for plaiting |
| | D | 15179010 | Argent | $4,013,177 | 51.8 | Edible artificial mixtures of products provided for in headings 1501 to 1515, cont. 5% or more by weight of soybean oil or fraction thereof |
| | D | 16010040 | Brazil | $86,503 | 56.2 | Sausages and similar products of beef, beef offal or blood; food preparations based on these products, in airtight containers |
| | D | 16025009 | Argent | $9,343,952 | 94.1 | Prepared or preserved meat of bovine animals, cured or pickled, not containing cereals or vegetables |
| | D | 17019180 | Brazil | $783,662 | 66.2 | Cane/beet sugar & pure sucrose, refined, solid, w/added flavoring, nesoi |
| * | D | 17023022 | Jamaica | $31,541 | 100 | Glucose & glucose syrup nt containing or containing in dry state less than 20% fructose; blended, see gen. note 15 of the schedule & prov. |
| | D | 17029010 | Colomb | $113,476 | 100 | Cane/beet sugars & syrups (incl. invert sugar); nesoi, w/soluble non-sugar solids 6% or less soluble solids, subj Ch17 US note 5 |
| | D | 17029035 | Brazil | $5,263,728 | 90.8 | Invert molasses |
| * | D | 18061034 | Colomb | $270,828 | 100 | Cocoa powder, sweetened, neosi, subject to add US note 1 to Ch. 18 |
| | D | 18061043 | Brazil | $71,582 | 58.6 | Cocoa powder, o/90% by dry wt of sugar, subject to gen. note 15 of the HTS |
| * | D | 18063255 | Dom Rep | $114,200 | 62.6 | Cocoa preps, not filled, in blocks, slabs or bars weighing 2 kg or less, subject to gen. note 15 of the HTS |
| | D | 19012045 | Argent | $29,730 | 100 | Mixes for bakers wares (dairy prod. of Ch4 US note 1), n/o 25% bf, not retail, subj. to add. US nte 10 to Ch.4, not GN15 |
| * | D | 20041040 | Colomb | $74,451 | 79.4 | Yellow (Solano) potatoes, prepared or preserved otherwise than by vinegar or acetic acid, frozen |
| | D | 20060070 | Thailnd | $2,158,760 | 53.8 | Fruit nesi, and nuts, except mixtures, preserved by sugar (drained, glace or crystallized) |
| * | D | 20081925 | Peru | $294,758 | 82.3 | Pecans, otherwise prepared or preserved, nesi |
| | D | 20083096 | Peru | $2,412 | 51.6 | Citrus fruit nesoi (ncluding bergamots), other than peel or pulp, otherwise prepared or preserved, nesoi |
| * | D | 20085020 | Argent | $55,724 | 55.6 | Apricot pulp, otherwise prepared or preserved, nesi |
| * | D | 20089913 | C Rica | $8,388,321 | 75.6 | Banana pulp, otherwise prepared or preserved, nesi |
| * | D | 20089923 | Dom Rep | $108,368 | 50.6 | Cashew apples, mameyes colorados, sapodillas, soursops and sweetsops, otherwise prepared or preserved, nesi |
| | D | 20089935 | Thailnd | $3,952,479 | 81.4 | Lychees and longans, otherwise prepared or preserved, nesi |
| | D | 20089950 | Thailnd | $1,884,349 | 52.5 | Papayas, other than pulp, otherwise prepared or preserved, nesi |
| | D | 20093920 | Brazil | $65,676 | 60.8 | Lime juice, Brix value exceeding 20, fit for beverage purposes |
| | D | 23050000 | Argent | $958,171 | 100 | Oilcake and other solid residues, resulting from the extraction of peanut (ground-nut) oil |
| | D | 23063000 | Argent | $1,515,813 | 100 | Oilcake and other solid residues, resulting from the extraction of vegetable fats or oils, of sunflower seeds |
| | D | 23065000 | Dom Rep | $29,299 | 100 | Oilcake and other solid residues, resulting from the extraction of vegetable fats or oils, of coconut or copra |
| * | D | 24039120 | Dom Rep | $43,904 | 100 | "Homogenized" or "reconstituted" tobacco suitable for use as wrapper tobacco |
| | D | 25151220 | Turkey | $719,497 | 67.3 | Travertine, merely cut into blocks or slabs of a rectangular (including square) shape |
| | D | 26110060 | Bolivia | $3,620,807 | 52.2 | Tungsten concentrates |
| | D | 28042900 | Russia | $10,658,127 | 66 | Rare gases, other than argon |

FLAGS: 'G' = Graduated; '*' = Excluded full yr; 'D' = Excluded January/June; 'C'= Exclued July/December; 'D'= De minimis;

LIST II: GSP COUNTRIES ELIGIBLE FOR De MINIMIS WAIVER
INCLUDING ITEMS FOR WHICH WAVIER WILL NOT BE UTILIZED (N) AND 2004 TRADE

| | | | | | | |
|---|---|---|---|---|---|---|
| | D | 28262000 | Brazil | $241,099 | 54.4 | Fluorosilicates of sodium or of potassium |
| | D | 28401100 | Turkey | $40,247 | 64.9 | Anhydrous disodium tetraborate (refined borax) |
| | D | 28401900 | Turkey | $4,032,757 | 64 | Disodium tetraborate (refined borax) except anhydrous |
| | D | 28415010 | Kazakhs | $154,777 | 82.9 | Potassium dichromate |
| | D | 28419020 | Kazakhs | $4,017,017 | 53.1 | Ammonium perrhenate |
| | D | 28500020 | Russia | $122,240 | 66.4 | Hydride, nitride, azide, silicide and boride of vanadium |
| | D | 29035100 | Romania | $405,000 | 97 | 1,2,3,4,5,6-Hexachlorocyclohexane |
| | D | 29036908 | Brazil | $4,363,152 | 56.3 | p-Chlorobenzotrifluoride; and 3,4-Dichlorobenzotrifluoride |
| | D | 29095040 | Indnsia | $3,424,538 | 56.3 | Odoriferous or flavoring compounds of ether-phenols, ether-alcohol-phenols & their halogenated, sulfonated, nitrated, nitrosated derivatives |
| | D | 29153400 | Russia | $138,793 | 72.4 | Isobutyl acetate |
| * | D | 29280010 | Colomb | $608,560 | 73.6 | Methyl ethyl ketoxime |
| | D | 29349918 | Brazil | $3,142,569 | 53.4 | Aromatic or modified aromatic pesticides nesoi, of other heterocyclic compounds, nesoi |
| | D | 38084010 | Argent | $4,750,143 | 93 | Disinfectants, containing any aromatic or modified aromatic disinfectant |
| | D | 41012040 | Brazil | $3,300 | 85.3 | Whole bovine hides/skins (not buffalo) (n/o 8 kg dried, 10 kg dry salted or 16 kg fresh/otherwise preserved), ov 2.6 m2, vegetable pretanned |
| | D | 41015050 | Brazil | $198,910 | 67.7 | Whole raw bovine hides/skins (not buffalo), weight over 16 kg, surface area over 2.6 m2, pretanned (not vegetable) but not further prepared |
| | D | 41015070 | Colomb | $161,482 | 67.3 | Whole raw equine hides and skins, of a weight exceeding 16 kg, pretanned but not further prepared |
| | D | 41019035 | Argent | $320 | 100 | Raw buffalo hides and skins (other than whole), pretanned but not further prepared |
| | D | 41019040 | Argent | $28,846 | 84.4 | Raw bovine hides and skins (other than whole), vegetable pretanned but not further prepared |
| | D | 41032020 | Colomb | $15,000 | 74.1 | Raw hides and skins of reptiles, vegetable pretanned but not further prepared |
| * | D | 41062110 | Peru | $87,186 | 92 | Hides and skins of goats or kids, without hair on, tanned but not further prepared, wet blue |
| | D | 41062190 | India | $532,034 | 51.6 | Hides and skins of goats or kids, without hair on, tanned but not further prepared, in the wet state other than wet blue |
| | D | 41062200 | Pakistn | $776,991 | 52.9 | Hides and skins of goats or kids, without hair on, tanned but not further prepared, in the dry state (crust) |
| | D | 41071140 | India | $17,395 | 93.9 | Full grain unsplit whole buffalo leather, without hair on, surface over 2.6 sq m, prepared after tanning or crusting, not heading 4114 |
| | D | 41071160 | Brazil | $1,552,924 | 59.5 | Full grain unsplit upper & sole leather of bovines (not buffalo) nesoi or equine, w/o hair on, prepared after tanning or crusting, not 4114 |
| | D | 41071240 | India | $683,632 | 79.7 | Grain split whole buffalo leather, without hair on, unit surface area over 2.6 sq m, prepared after tanning or crusting, not of heading 4114 |
| C | D | 41071270 | Dom Rep | $1,631,962 | 65.6 | Grain split whole bovine (not buffalo) nesoi and equine nesoi leathers, w/o hair on, prepared after tanning or crusting, not fancy, not 4114 |
| | D | 41079140 | India | $247,776 | 96.9 | Full grain unsplit buffalo leather (not whole), w/o hair on, prepared after tanning or crusting (including parchment-dressed), not head 4114 |
| | D | 41079940 | India | $49,648 | 53.5 | Buffalo leather other than full grains unsplit & grain splits, not whole, w/o hair on, prepared after tanning or crusting, not heading 4114 |
| | D | 42029204 | Phil R | $8,448,354 | 80.3 | Insulated beverage bags, outer surface of textile materials, interior only flexible plastic container store & dispense beverage thru tube |
| * | D | 44121325 | Brazil | $3,813,947 | 79.8 | Plywood sheet n/o 6 mm thick,tropical hard wood outer ply, face ply of Spanish cedar or walnut, not surface-covered beyond clear/transparent |
| * | D | 44121425 | Brazil | $5,037,271 | 66.3 | Plywood sheet n/o 6 mm thick,outer ply of nontropical hardwood,face ply Spanish Cedar or walnut,not surface-covered beyond clear/transparent |
| | D | 50071030 | India | $4,652,181 | 69 | Woven fabrics of noil silk, containing 85 percent or more by weight of silk or silk waste |
| | D | 52083120 | India | $170,712 | 90.6 | Dyed plain weave certified hand-loomed fabrics of cotton, containing 85% or more cotton by weight, weighing not more than 100 g/m2 |
| | D | 52084120 | India | $369,602 | 98.3 | Plain weave certified hand-loomed fabrics of cotton, 85% or more cotton by weight, weighing not over 100 g/m2, of yarns of different colors |
| | D | 52084210 | India | $137,456 | 74.7 | Plain weave certified hand-loomed fabrics of cotton, 85% or more cotton by weight, over 100 but n/o 200 g/m2, of yarns of different colors |
| | D | 52093130 | India | $2,834,467 | 99.1 | Dyed, plain weave certified hand-loomed fabrics of cotton, containing 85% or more cotton by weight, weighing more than 200 g/m2 |
| | D | 52094130 | India | $1,772,543 | 97.1 | Plain weave certified hand-loomed fabrics of cotton, cont. 85% or more cotton by weight,weighing over 200 g/m2, of yarns of different colors |
| C | D | 53089010 | Dom Rep | $1,430,956 | 82.5 | Paper yarn |
| | D | 64069100 | Colomb | $403,923 | 53.1 | Parts of footwear, nesoi, of wood |
| | D | 71132025 | India | $805,195 | 90.2 | Base metal clad w/gold mixed link necklaces and neck chains |
| | D | 72021110 | Georgia | $5,526,351 | 89.4 | Ferromanganese containing by weight more than 2 percent but not more than 4 percent of carbon |
| | D | 73072110 | India | $9,125,962 | 73.6 | Stainless steel, flanges for tubes/pipes, forged, not machined, not tooled and not otherwise processed after forging |
| * | D | 74031200 | Peru | $162,696 | 100 | Refined copper, wire bars |
| | D | 74130090 | Turkey | $9,037,011 | 65.5 | Copper, stranded wire, cables, plaited bands and the like, not electrically insulated, fitted with fittings or made up into articles |
| | D | 81121200 | Kazakhs | $882,137 | 100 | Beryllium, unwrought; beryllium powders |
| | D | 81121900 | Kazakhs | $1,939,062 | 90.8 | Beryllium, articles nesoi |
| | D | 84069030 | Brazil | $394,242 | 63 | Parts of steam turbines, rotors, not further worked than cleaned or machined for removal of fins, etc., or certain other working |
| | D | 84101300 | Brazil | $1,584,040 | 85.3 | Hydraulic turbines and water wheels of a power exceeding 10,000 kW |
| | D | 85281216 | Thailnd | $1,275,264 | 56.7 | Non-high def. color television reception app., nonprojection, w/CRT, display diag. ov 34.29 cm but n/ov 35.56 cm, incorp. VCR or player |
| | D | 85283050 | India | $305,789 | 87.9 | High definition color video projectors, with a cathode-ray tube, incorporating VCR or player |
| | D | 90160040 | Thailnd | $968,238 | 59.1 | Jewelers' balances (nonelectrical) of a sensitivity of 5 cg or better, with or without weights, and parts and accessories thereof |
| | D | 96142060 | Turkey | $112,243 | 94.2 | Smoking pipes and bowls, wholly of clay, and other smoking pipes w/bowls wholly of clay |

FLAGS: 'G' = Graduated; '*' = Excluded full yr; 'D' = Excluded January/June; 'C'= Exclued July/December; 'D'= De minimis;

LIST III: GSP COUNTRIES ELIGIBLE FOR REDESIGNATION INCLUDING
ITEMS TO BE DENIED REDESIGNATION(W) AND 2004 TRADE

| flag | htsus | partner | imports | share | description |
|---|---|---|---|---|---|
| C | 02023002 | C Rica | 0 | 0 | High-qual. beef cuts, boneless, processed, frozen, descr in gen. note 15 of the HTS |
| * | 02023010 | Argent | 0 | 0 | High-qual. beef cuts, boneless, processed, frozen, descr in add. US note 3 to Ch. 2 |
| C | 03026910 | Ecuador | 0 | 0 | Fish, nesi, excl. fillets, livers and roes, fresh or chilled, scaled, in immediate containers weighing with their contents 6.8 kg or less |
| * | 07082010 | Peru | 13,725 | 34 | Lima beans, fresh or chilled, shelled or unshelled, if entered November 1 through the following May 31, inclusive |
| * | 07102930 | Dom Rep | 0 | 0 | Pigeon peas, uncooked or cooked by steaming or boiling in water, frozen, if entered Oct. 1 through the following June 30, inclusive |
| * | 07108065 | Guatmal | 1,217,431 | 18 | Brussels sprouts, uncooked or cooked by steaming or boiling in water, frozen, not reduced in size |
| * | 07108070 | Guatmal | 1,033,721 | 5 | Vegetables nesi, uncooked or cooked by steaming or boiling in water, frozen, not reduced in size |
| * | 07133320 | Salvadr | 448,707 | 8 | Dried kidney beans, including white pea beans, shelled, if entered May 1 through August 31, inclusive, in any year |
| * | 07134020 | India | 2,865,413 | 46 | Dried lentils, shelled |
| * | 07139010 | Peru | 0 | 0 | Seeds of leguminous vegetables nesi, of a kind used for sowing |
| * | 07142010 | Dom Rep | 18,891 | 34 | Sweet potatoes, frozen, whether or not sliced or in the form of pellets |
| * | 07142010 | Colomb | 0 | 0 | Sweet potatoes, frozen, whether or not sliced or in the form of pellets |
| * | 07149045 | C Rica | 264,060 | 34 | Frozen dasheens/yams/arrowroot/salep/Jerusalem artichokes/similar roots & tubers (but not cassava, sweet potatoes & Chinese water chestnuts) |
| * | 08029080 | Guatmal | 4,500 | 0 | Nuts nesi, fresh or dried, in shell |
| * | 08055030 | Jamaica | 0 | 0 | Tahitian limes, Persian limes and other limes of the Citrus latifolia variety, fresh or dried |
| * | 11029030 | Salvadr | 0 | 0 | Cereal flours nesi, mixed together |
| * | 16025009 | Brazil | 20,801 | 0.2 | Prepared or preserved meat of bovine animals, cured or pickled, not containing cereals or vegetables |
| * | 16041450 | Colomb | 0 | 0 | Tunas and skipjack, not in airtight containers, not in bulk or in immediate containers weighing with contents over 6.8 kg each |
| * | 16041450 | Thailnd | 0 | 0 | Tunas and skipjack, not in airtight containers, not in bulk or in immediate containers weighing with contents over 6.8 kg each |
| * | 17011105 | Brazil | 15,584 | 29.7 | Cane sugar, raw, in solid form, w/o added flavoring or coloring, subject to gen. note 15 of the HTS |
| * | 17011105 | Colomb | 0 | 0 | Cane sugar, raw, in solid form, w/o added flavoring or coloring, subject to gen. note 15 of the HTS |
| * | 17011110 | Dom Rep | 74,051,003 | 18 | Cane sugar, raw, in solid form, w/o added flavoring or coloring, subject to add. US 5 to Ch.17 |
| * | 17011110 | Brazil | 52,796,405 | 12 | Cane sugar, raw, in solid form, w/o added flavoring or coloring, subject to add. US 5 to Ch.17 |
| * | 17011120 | Brazil | 0 | 0 | Cane sugar, raw, in solid form, to be used for certain polyhydric alcohols |
| * | 17011120 | Guatmal | 33,016,650 | 32.9 | Cane sugar, raw, in solid form, to be used for certain polyhydric alcohols |
| * | 17011205 | Brazil | 0 | 0 | Beet sugar, raw, in solid form, w/o added flavoring or coloring, subject to gen. note 15 of the HTS |
| * | 17011210 | Brazil | 0 | 0 | Beet sugar, raw, in solid form, w/o added flavoring or coloring, subject to add. US 5 to Ch.17 |
| * | 17019105 | Brazil | 0 | 0 | Cane/beet sugar & pure sucrose, refined, solid, w/added coloring but not flav., subject to gen. note 15 of the HTS |
| * | 17019142 | Jamaica | 0 | 0 | Cane/beet sugar & pure sucrose, refined, solid, w/added flavoring, o/65% by wt. sugar, descr. in Ch17 US note 2, subj. to gen nte 15 |
| C | 17019142 | Colomb | 0 | 0 | Cane/beet sugar & pure sucrose, refined, solid, w/added flavoring, o/65% by wt. sugar, descr. in Ch17 US note 2, subj. to gen nte 15 |
| * | 17019905 | Brazil | 0 | 0 | Cane/beet sugar & pure sucrose, refined, solid, w/o added coloring or flavoring, subject to gen. note 15 of the HTS |
| * | 17019910 | Brazil | 2,719,229 | 15.8 | Cane/beet sugar & pure sucrose, refined, solid, w/o added coloring or flavoring, subject to add. US 5 to Ch.17 |
| * | 17023022 | Argent | 0 | 0 | Glucose & glucose syrup nt containing or containing in dry state less than 20% fructose; blended, see gen. note 15 of the schedule & prov. |
| * | 17026022 | Argent | 0 | 0 | Oth fructose & fruc. syrup contng in dry state >50% by wt. of fructose, blended syrup(see add'l U.S. note 4-chap 17) & see gen. note 15 |
| * | 17029035 | Belize | 0 | 0 | Invert molasses |
| C | 17029035 | Guatmal | 484,533 | 8 | Invert molasses |
| * | 17029040 | Brazil | 0 | 0 | Other cane/beet syrups nesi |
| * | 17029040 | Dom Rep | 0 | 0 | Other cane/beet syrups nesi |
| * | 17031030 | Dom Rep | 3,200 | 0 | Cane molasses imported for (a) the commercial extraction of sugar or (b) human consumption |
| * | 18061022 | Colomb | 0 | 0 | Cocoa powder, o/65% but less than 90% by dry wt of sugar, subject to gen. note 15 of the HTS |
| * | 18061065 | Brazil | 0 | 0 | Cocoa powder, o/90% by dry wt of sugar, neosi, subject to add. US note 1 to Ch. 18 |
| * | 18062022 | Turkey | 0 | 0 | Chocolate, ov 2kg, cont. milk solids, not in blocks 4.5 kg or more, subj. to gen. note 15 of the HTS |
| * | 18063255 | Colomb | 68,000 | 37.3 | Cocoa preps, not filled, in blocks, slabs or bars weighing 2 kg or less, subject to gen. note 15 of the HTS |
| * | 19012002 | Colomb | 0 | 0 | Mixes for bakers wares, o/25% butterfat, not retail, subject to gen. note 15 of the HTS |
| * | 20041040 | Peru | 19,267 | 20.5 | Yellow (Solano) potatoes, prepared or preserved otherwise than by vinegar or acetic acid, frozen |
| * | 20079948 | Argent | 56,208 | 5.9 | Apple, quince and pear pastes and purees, being cooked preparations |
| * | 20083010 | Dom Rep | 73,559 | 11.4 | Peel of oranges, mandarins, clementines, wilkings and similar citrus hybrids, otherwise prepared or preserved, nesi |
| * | 20085020 | Turkey | 0 | 0 | Apricot pulp, otherwise prepared or preserved, nesi |
| * | 20089945 | Dom Rep | 40,022 | 8.6 | Papaya pulp, otherwise prepared or preserved, nesi |
| * | 20093110 | Hondura | 0 | 0 | Lime juice, Brix value not exceeding 20, unfit for beverage purposes |
| * | 20093910 | Hondura | 0 | 0 | Lime juice, Brix value exceeding 20, unfit for beverage purposes |
| * | 21069006 | Colomb | 0 | 0 | Food preps, nesoi, n/o 5.5% bf, mixed w/other ingred. if o/16% milk solids capable of being further proc., subj. to Ch4 US nte 10, not GN15 |
| * | 21069012 | Dom Rep | 0 | 0 | Compound alcoholic preparations of a kind used for the manufacture of beverages, over 20% weight alcohol but not over 0.5% vol alcohol |
| * | 21069052 | Salvadr | 0 | 0 | Juice of any single fruit or vegetables juices (o/t orange), concentrated, fortified with vitamins or minerals |
| * | 22029036 | Dom Rep | 242,543 | 44.2 | Single fruit or vegetable juice (other than orange), fortified with vitamins or minerals, not concentrated |
| * | 22071030 | Barbado | 1,944,263 | 17.9 | Undenatured ethyl alcohol of 80 percent vol. alcohol or higher, for beverage purposes |
| * | 24012057 | Indnsia | 0 | 0 | Tobacco, partly or wholly stemmed/stripped, n/threshed or similarly proc., not or n/over 35% wrapper, not flue-cured burley etc., other nesi |

FLAGS: '*' = Excluded full yr; 'C' excluded for second part of year.

LIST III: GSP COUNTRIES ELIGIBLE FOR REDESIGNATION INCLUDING
ITEMS TO BE DENIED REDESIGNATION(W) AND 2004 TRADE

| | | | | | |
|---|---|---|---|---|---|
| * | 26070000 | Peru | 0 | 0 | Lead ores and concentrates |
| * | 28046910 | Brazil | 66,086,808 | 38.2 | Silicon, containing by weight less than 99.99 percent but not less than 99 percent of silicon |
| * | 28433000 | Colomb | 0 | 0 | Gold compounds |
| * | 29049015 | Brazil | 0 | 0 | 4-Chloro-3-nitro-alpha,alpha,alpha-trifluorotoluene; and other specified aromatic sulfonated, nitrated or nitrosated deriv. of hydrocar. |
| * | 29061100 | Brazil | 240,000 | 0.8 | Menthol |
| * | 29091914 | Brazil | 48,894,638 | 7 | Methyl tertiay-butyl ether. (MTBE) |
| * | 29121300 | Colomb | 0 | 0 | Butanal (Butyraldehyde, normal isomer) |
| * | 29214223 | Guatmal | 0 | 0 | 3,4-Dichloroaniline |
| * | 29333923 | Guatmal | 0 | 0 | o-Paraquat dichloride |
| * | 32129000 | Colomb | 0 | 0 | Pigments dispersed in nonaqueous media, in liquid or paste form, used in making paints; dyes & coloring matter packaged for retail sale |
| * | 35019020 | Dom Rep | 0 | 0 | Casein glues |
| * | 38159010 | Panama | 0 | 0 | Reaction initiators, reaction accelerators and catalytic preparations, nesoi, consisting wholly of bismuth, of tungsten or of vanadium |
| * | 38231920 | Phil R | 23,320,315 | 38.9 | Industrial monocarboxylic fatty acids or acid oils from refining derived from coconut, palm-kernel, or palm oil |
| * | 39205980 | Dom Rep | 93,209 | 4.6 | Plates, sheets, film, etc, noncellular, not reinforced, laminated, combined, of other acrylic polymers, nesoi |
| * | 40111010 | Brazil | 73,621,530 | 2.4 | New pneumatic radial tires, of rubber, of a kind used on motor cars (including station wagons and racing cars) |
| * | 40111050 | Brazil | 90,939 | 0.1 | New pneumatic tires excluding radials, of rubber, of a kind used on motor cars (including station wagons and racing cars) |
| * | 40112010 | Brazil | 71,340,439 | 3.5 | New pneumatic radial tires, of rubber, of a kind used on buses or trucks |
| * | 40112050 | Brazil | 46,001 | 0 | New pneumatic tires excluding radials, of rubber, of a kind used on buses or trucks |
| * | 41079960 | Colomb | 0 | 0 | Upper & sole leather of bovines (not buffalo) or equines, not whole, nesoi, w/o hair on, prepare after tanning or crusting, not 4114 |
| * | 44121431 | Brazil | 60,759,315 | 26.2 | Plywood sheets n/o 6 mm thick, outer ply of nontropical hardwood, with face ply nesoi, not surface-covered beyond clear/transparent |
| * | 44121456 | Brazil | 923,934 | 2.6 | Plywood sheets n/o 6 mm thick, outer ply of nonconiferous wood, surface covered other than clear or transparent |
| * | 44121930 | Russia | 1,196,168 | 38.9 | Plywood of wood sheets, n/o 6 mm thick each, with outer plies of coniferous wood, European red pine face ply, not or clear surface covered |
| * | 44122241 | Colomb | 0 | 0 | Plywood nesoi, at least one hardwood outer ply, w/tropical hardwood ply, surface covered other than clear or transparent |
| * | 44122946 | Ecuador | 0 | 0 | Plywood nesoi, at least one hardwood outer ply nesoi, no particle board, surface covered other than clear/transparent |
| * | 44129241 | Ecuador | 0 | 0 | Plywood nesoi,softwood outer plies,least 1 ply trop. hardwood,no particle board,not surface-covered beyond clear/transparent, face ply nesoi |
| * | 44129251 | Guyana | 659,208 | 23.2 | Plywood nesoi,softwood outer plies, at least 1 ply trop. hardwood, no particle board, surface covered other than clear or transparent |
| * | 44129956 | Colomb | 0 | 0 | Plywood nesoi, softwood outer plies, no trop. hard wood ply, no particle board, surface covered other than clear or transparent |
| * | 46019105 | India | 0 | 0 | Plaits of vegetable materials and similar products of such plaiting materials, whether or not assembled into strips |
| * | 46019905 | India | 223,019 | 6 | Plaits and similar products of plaiting materials (not vegetable), whether or not assembled into strips |
| * | 65010060 | Colomb | 450 | 0 | Hat forms, hat bodies and hoods, not blocked to shape or with made brims; plateaux & manchons; all of fur felt, not for men or boys |
| * | 65010060 | Ecuador | 49,424 | 6.3 | Hat forms, hat bodies and hoods, not blocked to shape or with made brims; plateaux & manchons; all of fur felt, not for men or boys |
| * | 69081020 | Thailnd | 526,536 | 6 | Glazed ceramic tiles, cubes & similar arts. w/largest area enclosable in sq. w/sides under 7 cm & larg. surf. area less than 38.7 cm2 |
| * | 69101000 | Brazil | 40,716,197 | 13.4 | Porcelain or china ceramic sinks, washbasins, baths, bidets, water closet bowls, urinals & siml. sanitary fixtures |
| * | 69109000 | Brazil | 14,522,679 | 4.2 | Ceramic (o/than porcelain or china) sinks, washbasins, baths, bidets, water closet bowls, urinals & siml. sanitary fixtures |
| * | 69119000 | Brazil | 13,385 | 0 | Porcelain or china (o/than bone china) household and toilet articles (other than tableware or kitchenware), nesoi |
| * | 69120044 | Brazil | 91,967 | 0.1 | Ceramic (o/than porcelain or china) household mugs and steins w/o attached pewter lids |
| * | 70120000 | India | 0 | 0 | Glass inners for vacuum flasks or for other vacuum vessels |
| * | 71069250 | Brazil | 15,691,349 | 19.9 | Silver (including silver plated with gold or platinum), in semimanufactured form, nesoi |
| * | 71090000 | Peru | 0 | 0 | Base metals or silver clad with gold, but not further worked than semimanufactured |
| * | 71131921 | Peru | 12,092,353 | 21.5 | Gold rope necklaces and neck chains |
| * | 71131925 | Turkey | 4,531,856 | 9.7 | Gold mixed link necklaces and neck chains |
| * | 71141900 | Peru | 0 | 0 | Precious metal (o/than silver) articles, nesoi, whether or not plated or clad with other precious metal, nesoi |
| * | 71159030 | Colomb | 0 | 0 | Gold (including metal clad with gold) articles (o/than jewellry or goldsmiths' wares), nesoi |
| * | 71162005 | Thailnd | 5,392,584 | 7.6 | Jewelry articles of precious or semiprecious stones, valued not over $40 per piece |
| * | 71162015 | Thailnd | 1,723,503 | 3.6 | Jewelry articles of precious or semiprecious stones, valued over $40 per piece |
| * | 71179055 | Peru | 0 | 0 | Imitation jewelry nesoi, not of base metal, n/o 20 cents/doz. pcs or pts |
| * | 73079130 | Brazil | 0 | 0 | Alloy steel (o/than stainless), not cast, flanges for tubes/pipes, forged, not machined/tooled and not otherwise processed after forging |
| * | 74031100 | Russia | 7,440,250 | 0.3 | Refined copper cathodes and sections of cathodes |
| * | 74072190 | Brazil | 96,261 | 0.1 | Copper-zinc base alloys (brass), bars & rods nesoi, not having a rectangular cross section |
| * | 74072230 | Russia | 0 | 0 | Copper-nickel base alloys (cupro-nickel) or copper-nickel-zinc base alloys (nickel silver), profiles (o/than hollow profiles) |
| * | 74112150 | Trinid | 0 | 0 | Copper-zinc base alloys (brass), tubes and pipes, other than seamless |
| * | 76041050 | Russia | 0 | 0 | Aluminum (o/than alloy), bar and rods, other than with a round cross section |
| * | 76141050 | Ecuador | 0 | 0 | Aluminum, stranded wire, cables & the like w/steel core, not electrically insulated, fitted with fittings or made up into articles |
| * | 76149020 | Venez | 68,964 | 0.8 | Aluminum, elect. conductors of stranded wire, cables & the like (o/than w/steel core), n/elect. insulated, n/fitted w/fittings or articles |
| * | 76149050 | Venez | 0 | 0 | Aluminum, stranded wire, cables and the like (o/than w/steel core), not electrically insulated, fitted w/fittings or made up into articles |
| * | 76151930 | Thailnd | 104,994,950 | 29.9 | Aluminum, cooking and kitchen ware (o/than cast), enameled or glazed or containing nonstick interior finishes |
| * | 78019930 | Colomb | 0 | 0 | Lead (o/than refined lead), bullion |
| * | 78019930 | Dom Rep | 0 | 0 | Lead (o/than refined lead), bullion |

FLAGS: '*' = Excluded full yr; 'C' excluded for second part of year.

LIST III: GSP COUNTRIES ELIGIBLE FOR REDESIGNATION INCLUDING
ITEMS TO BE DENIED REDESIGNATION(W) AND 2004 TRADE

| | | | | | |
|---|---|---|---|---|---|
| * | 79050000 | Peru | 34,138 | 0.3 | Zinc, plates, sheets, strip and foil |
| * | 81123060 | Russia | 56,700 | 3.2 | Germanium, unwrought |
| * | 84082090 | Brazil | 52,545 | 0.2 | Compression-ignition internal-combustion piston engines used for propulsion of vehicles of chapter 87, nesi |
| * | 84099150 | Brazil | 62,607,030 | 2.2 | Parts nesi, used solely or principally with spark-ignition internal-combustion piston engines for vehicles of head 8701.20, 8702-8704 |
| * | 84133010 | Brazil | 36,746,271 | 11.6 | Fuel-injection pumps for compression-ignition engines, not fitted with a measuring device |
| * | 84509020 | Ecuador | 0 | 0 | Tubs and tub assemblies for household- or laundry-type washing machines |
| * | 85165000 | Thailnd | 72,014,101 | 8 | Microwave ovens of a kind used for domestic purposes |
| * | 85354000 | Dom Rep | 0 | 0 | Lightning arrestors, voltage limiters and surge suppressors, for a voltage exceeding 1,000 V |
| * | 87084050 | Brazil | 439,007 | 0.9 | Pts. & access. of mtr. vehic. of 8701, nesoi, and of 8705, gear boxes |
| * | 87089967 | Brazil | 94,592,010 | 2.7 | Pts. & access. of motor vehicles of 8701, nesoi, and 8702-8705, pts. for power trains nesoi |
| * | 93051040 | Peru | 0 | 0 | Parts and accessories nesoi, for revolvers or pistols designed to fire only blank cartridges or blank ammunition |

FLAGS: '*' = Excluded full yr; 'C' excluded for second part of year.

[FR Doc. 05–6144 Filed 3–28–05; 8:45 am]

BILLING CODE 3190–W5–C

## DEPARTMENT OF TRANSPORTATION

### Federal Aviation Administration

### Agency Information Collection Activity Under OMB Review

**AGENCY:** Federal Aviation Administration (FAA), DOT.

**ACTION:** Notice.

**SUMMARY:** In compliance with the Paperwork Reduction Act of 1995 (44 U.S.C. 3501 *et seq.*), this notice announces that the Information Collection Request (ICR) abstracted below has been forwarded to the Office of Management and Budget (OMB) for extension of the currently approved collection. The ICR describes the nature of the information collection and the expected burden. The **Federal Register** notice with a 60-day comment period soliciting comments on the following collection of information was published on December 24, 2004 on page 78520.

**DATES:** Comments must be submitted on or before April 28, 2005. A comment to OMB is most effective if OMB receives it within 30 days of publication.

**FOR FURTHER INFORMATION CONTACT:** Judy Street on (202) 267–9895.

**SUPPLEMENTARY INFORMATION:**

**Federal Aviation Administration (FAA)**

*Title:* Dealer's Aircraft Registration Application.

*Type of Request:* Extension of a currently approved collection.

*OMB Control Number:* 2120–0024.

*Forms(s):* AC Form 8050–5.

*Affected Public:* An estimated total of 2,740 aircraft dealers.

*Abstract:* AC Form 8050–5 is an application for a dealer's Aircraft Registration Certificate which, under 49 USC, 1404, may be issued to a person engaged in manufacturing, distributing, or selling aircraft. Information received enables the Civil Aviation registry to determine eligibility of an applicant to receive a Dealer's Certificate.

*Estimated Annual Burden Hours:* An estimated 2,055 hours annually.

**ADDRESSES:** Send comments to the Office of Information and Regulatory Affairs, Office of Management and Budget, 725 17th Street, NW., Washington, DC 20503, Attention FAA Desk Officer.

Comments are invited on: Whether the proposed collection of information is necessary for the proper performance of the functions of the Department, including whether the information will have practical utility; the accuracy of the Department's estimates of the burden of the proposed information collection; ways to enhance the quality, utility and clarity of the information to be collected; and ways to minimize the burden of the collection of information on respondents, including the use of automated collection techniques or other forms of information technology.

Issued in Washington, DC, on March 22, 2005.

**Judith D. Street,**

*FAA Information Collection Clearance Officer, Standards and Information Division, APF–100.*

[FR Doc. 05–6068 Filed 3–28–05; 8:45 am]

BILLING CODE 4910–13–M

## DEPARTMENT OF TRANSPORTATION

### Federal Aviation Administration

### Airport Improvement Program Grant Assurances; Notice of Modifications

**AGENCY:** Federal Aviation Administration (FAA), DOT.

**ACTION:** Notice to modify Airport Improvement Program Grant Assurances on an interim basis.

**SUMMARY:** In issuing this notice, the FAA incorporates, on an interim basis; two new assurances to the standard grant assurances that are required of a sponsor before receiving a grant under the Airport Improvement Program (AIP). Also, the FAA is modifying another grant assurance. Pursuant to applicable law, the Secretary of Transportation is required to provide notice in the **Federal Register** of, and to provide an opportunity for public comment on, proposals to modify the assurances and on proposals for additional AIR assurances.

A notice of modification of Airport Improvement Program grant assurances and of the opportunity to comment was published in the **Federal Register**/Vol. 69, No. 163/Tuesday, August 24, 2004 on page 52057. The existing AIP grant assurances are being amended here for two reasons: To add two new assurances as required by Vision 100—Century of Aviation Reauthorization Act, (Pub. L. 108–176) and to modify an existing assurance.

The August 24 notice proposed, in addition to these new assurances to restructure the grant assurances to better reflect existing law. FAA also invited comments on all of the assurances for proposed changes or for possible recommendations to propose changes to existing statute. FAA is committed to this larger project and wishes to give full considerations to the comments received. At the same time, FAA is obligated to implement changes to law as timely as possible. Therefore, this notice is issued to implement the law with respect to the new assurances and the modified assurance while the larger project is being considered.

**DATES:** These modifications to the existing Grant Assurances will be adopted as of the date of publication in the **Federal Register**.

**FOR FURTHER INFORMATION CONTACT:** Mr. Kendall Ball, Airport Improvement Program Branch, Airports Financial Assistance Division, APP 520, Room 619, FAA, 800 Independence Avenue, SW., Washington, DC 20591, Telephone (202) 267–7436.

**SUPPLEMENTARY INFORMATION:** The Secretary must receive certain assurances from a sponsor (applicant) seeking financial assistance for airport planning, airport development, noise compatibility planning or noise mitigation under title 49, U.S.C., as amended. These assurances are submitted as part of a sponsor's application for Federal assistance and are incorporated into all grant agreements. As need dictates, these assurances are modified to reflect new Federal requirements. Notice of such proposed modifications was published in the **Federal Register** and an opportunity was provided for comment by the public.

The current assurances were published on February 3, 1988, at 53 FR 3104 and amended on September 6, 1988, at FR 34361, on August 29, 1999, at 54 FR 35748 on June 10, 1994 at 59 FR 30076, on January 4, 1995, at 60 FR 521, on June 2, 1997, at 62 FR 29761 on August 18, 1999, at 64 FR 45008, and on August 24, at 69 FR 163.

**Discussion of Comments Received in Response to the Notice of Modification of Airport Improvement Grant Assurances**

On August 24, 2004, the Federal Aviation Administration published in the **Federal Register** (69 FR 52057) modifications to the Airport Improvement Program grant assurances. The agency asked for public comment by September 23, 2004. On September 17, 2004 a notice was published in the **Federal Register** (69 FR 56112) extending the comment period until November 8, 2004.

The FAA received comments from 14 respondents on the notice of proposed modifications of the grant assurances. One of the 14 respondents comments were received following the close of the comment period on November 8.

Although one was technically late, the FAA has decided to consider all comments. However, this discussion of comments will be limited here to only those comments received pertaining to the two new assurances being added to the existing assurances and the assurance being amended.

National Air Transportation (NATA) recommended the new Hangar Construction assurance define the duration of a ''long-term'' lease. NATA believes that as the assurance is currently written it leaves the length entirely up to the subjective nature of whoever is writing the lease. The Airports Council International—North America (ACI–NA) in its comment, however, recommended that the FAA avoid defining the meaning of ''long term'' at this time. FAA agrees with the ACI–NA since it believes the airport Sponsor is better prepared to negotiate the limits of the lease to best suit the circumstances of each individual project. FAA in its enforcement of this assurance will take into account the specific circumstances involved. Thus, the wording will be adopted as proposed by FAA.

The Wayne County Airport Authority stated the hangar construction assurance is an unwarranted intrusion by the federal government into detailed landlord-tenant matters best left to the business judgment of airports. The Sacramento County Airport System (SCAS) stated they are unclear as to the purpose of the new assurance and that it should be deleted. Deletion of this assurance will require statutory action and the FAA will consider whether to recommend this change at the appropriate time. In the interim, FAA is obligated to implement statutory requirements and will retain the proposed assurance to meet legislative requirements.

The Cincinnati/Northern Kentucky International Airport (CVG) commented on the competitive access assurance stating the FAA should take the opportunity to more efficiently use resources if, in connection with the notice, the FAA made a determination of whether an update to a previously approved competition plan was warranted rather than the current policy which is to automatically require every medium and large hub airport to submit an update every eighteen (18) months. Subsequent to the receipt of this comment on September 30, FAA issued guidance in the form of a program guidance letter that identified circumstances in which updates would be required. In program guidance letter 04–08 Requirement for Airline Competition Plan, (September 30, 2004) the FAA amended policy to no longer require periodic written plan updates unless special conditions arise. The reader is referred to program guidance letter 04–08 for the full text on the competition plan initiative. The FAA believes that there is no need to alter the wording of the proposed assurance and is adopting it without change. ACI—NA requested the FAA to support an amendment to delete this statutory requirement as an unnecessary infringement on an airport's proprietary rights. In the interim ACI—NA urges the FAA not to over-define ''unable to accommodate'' a request by an air carrier. ACI—NA requests the assurance should state that an airport does not have to report an incident in which a carrier is denied access because the carrier is unwilling to pay the stated rental or other rate for the facility, or where a carrier has not given the airport a commercially reasonable period of time to prepare facilities for that carrier.

John Wayne Airport (SNA) filed a comment concerning the new competitive access assurance. SNA is concerned with the burdensome and duplicative nature of the reporting requirements and more importantly because this assurance could create a situation where federal agencies could be demanding that SNA find some means to accommodate new entrants or an increase in service by incumbent carriers where SNA has no practical ability to comply with the request. In the SNA summary they request SNA and other airports in a similar regulatory environment be exempt from the competitive access reporting requirements. The assurance as proposed contains a notice requirement only and does not address possible future action on the part of the Department of Transportation (DOT) or FAA. DOT and FAA will consider extenuating circumstances on a case-by-case basis and it would be inappropriate to exempt airports from the notice requirement in advance of considering all of the relevant information that may be provided with a notice as required under the assurance. Therefore, the FAA will retain the original proposed language of the assurance.

The American Association of Airport Executives (AAAE) stated in their letter they had provided testimony in opposition to the requirements of this provision. AAAE requests the FAA consider a legislative recommendation to Congress to eliminate the requirement for competition plans. FAA will consider this comment as it is formulating a future legislative proposal. In the meantime, FAA must retain the assurance.

The Sacramento County Airport System (SCAS) suggests that if the competitive access assurance is retained it should be supplemented with language that would state all reports shall be made readily available electronically to the public upon receipt by the FAA. FAA will consider this request as part of the ongoing review of the assurances referenced above. In the meantime, FAA will retain the original proposed language of the assurance.

Finally, FAA proposed to add language to assurance 31, Disposal of Land, to comply with a change made by Pub. L. 108–176 that permits that disposal proceeds for land purchased for noise purposes may be used to acquire commercial properties affected by the purchase of the land. Since there were no comments on this proposed addition, FAA is adopting the proposed wording.

**Discussion of Modifications**

FAA uses three separate sets of standard assurances: Airport Sponsors (owners/operators); Planning Agency sponsors; and Non-Airport Sponsors Undertaking Noise Compatibility Program Projects (hereinafter referred to as Non-Airport Sponsor Assurances). FAA is modifying only the Airport Sponsor assurances currently in effect to incorporate the below-noted changes, except with respect to assurance 31, as explained below.

The following changes affect only the Airport Sponsor Assurances and are being added:

(a) New Assurance 38, ''Hangar Construction'' is being added to comply with recently enacted Public Law 108–76. Assurance 38 shall read:

38. Hangar Construction. If the airport owner or operator and a person who owns an aircraft agree that a hangar is to be constructed at the airport for the aircraft at the aircraft owner's expense, the airport owner or operator will grant to the aircraft owner for the hangar a long term lease that is subject to such terms and conditions on the hangar as the airport owner or operator may impose.

(b) New Assurance 39, ''Competitive Access'' is being added to comply with recently enacted Public Law 108–76. Assurance 39 shall read:

39. Competitive Access.

(a) If the airport owner or operator of a medium or large hub airport (as defined in section 47102 of title 49, U.S.C.) has been unable to accommodate one or more requests by an air carrier for access to gates or other facilities at that airport in order to allow the air carrier to provide service to the airport or to expand service at the airport, the airport

owner or operator shall transmit a report to the Secretary that—

1. Describes the requests;

2. Provides an explanation as to why the requests could not be accommodated; and

3. Provides a time frame within which, if any, the airport will be able to accommodate the requests.

(b) Such report shall be due on either February 1 or August 1 of each year if the airport has been unable to accommodate the request(s) in the six month period prior to the applicable due date.

**Discussion of Modification of an Existing Assurance**

Existing Assurance 31 is being modified to comply with recently enacted Public Law 108–76. Both the Airport Sponsor Assurances and the Non-Airport Sponsor Assurances are being modified with this legislation. The legislation now allows the proceeds from the sale of land no longer needed for noise compatibility purposes to be used for the purchase of non-residential buildings or property in the vicinity of residential buildings or property previously purchased by the airport as part of a noise compatibility program. Assurance 31 shall now read in its entirety:

31. Disposal of Land

(a) For land purchased under a grant for airport noise compatibility purposes, it will dispose of the land when the land is no longer needed for such purposes at fair market value at the earliest practicable time. That portion of the proceeds or such disposition which is proportionate to the United States' share of acquisition of such land will, at the discretion of the Secretary, (1) Be paid to the Secretary for deposit in the Trust Fund, or (2) be reinvested in an approved noise compatibility project, as prescribed by the Secretary, including the purchase of nonresidential buildings or property in the vicinity of residential buildings or property previously purchased by the airport as part of a noise compatibility program.

(b) For land purchased under a grant for airport development purposes (other than noise compatibility), it will, when the land is no longer needed for airport purposes, dispose of such land at fair market value or make available to the Secretary an amount equal to the United States' proportionate share of the fair market value of the land. That portion of the proceeds of such disposition which is proportionate to the United States' share of the cost of acquisition of such land will, (a) Upon application to the Secretary, be reinvested in another eligible airport improvement project or projects approved by the Secretary at that airport or within the national airport system, or (b) be paid to the Secretary for deposit in the Trust Fund if no eligible project exists.

(c) Land shall be considered to be needed for airport purposes under this assurance if (a) It may be needed for aeronautical purposes (including runway or within the national airport system, or (b) be paid to the Secretary for deposit in the Trust Fund if no eligible project exists.

(d) Land shall be considered to be needed for airport purposes under this assurance if (a) It may be needed for aeronautical purposes (including runway protection zones) or serve as noise buffer land, and (b) the revenue from interim uses of such land contributes to the financial self-sufficiency of the airport. Further, land purchased with a grant received by an airport operator or owner before December 31, 1987, will be considered to be needed for airport purposes if the Secretary or Federal agency making such grant before December 31, 1987, was notified by the operator or owner of the uses of such land, did not object to such use, and the land continues to be used for that purpose, such use having commenced no later than December 15, 1989.

(e) Disposition of such land under (a), (b), or (c) will be subject to the retention or reservation of any interest or right therein necessary to ensure that such land will only be used for purposes which are compatible with noise levels and safety associated with operation of the airport.

Upon acceptance of the AIP grant by an airport sponsor, the assurances become a contractual obligation between the airport sponsor and the Federal government.

Dated: Issued in Washington, DC on February 18, 2005.

**Dennis E. Roberts,**

*Director, Office of Airport Planning and Programming.*

[FR Doc. 05–6072 Filed 3–28–05; 8:45 am]

BILLING CODE 4910–13–M

## DEPARTMENT OF TRANSPORTATION

### Federal Aviation Administration

### Change Notice for RTCA Program Management Committee

**AGENCY:** Federal Aviation Administration (FAA), DOT.

**ACTION:** Notice of RTCA Program Management Committee meeting.

**SUMMARY:** The FAA is issuing this notice to advise the public of a meeting of the RTCA Program Management Committee.

**DATES:** The meeting will be held April 7, 2005 starting at 9 a.m.

**ADDRESSES:** The meeting will be held at RTCA, Inc., 1828 L Street, NW., Suite 805, Washington, DC 20036.

**FOR FURTHER INFORMATION CONTACT:** RTCA Secretariat, 1828 L Street, NW., Suite 850, Washington, DC 20036; telephone (202) 833–9339; fax (202) 833–9434; Web site *http://www.rtca.org.*

**SUPPLEMENTARY INFORMATION:** Pursuant to section 10(a)(2) of the Federal Advisory Committee Act (Pub. L. 92–463, 5 U.S.C., Appendix 2), notice is hereby given for a Program Management Committee meeting. The revised agenda will include:

- April 7:
- Opening Session (Welcome and Introductory Remarks, Review/Approve Summary of a Previous Meeting).
- Publication Consideration/Approval:
- Final Draft, Revised DO–286, Minimum Aviation System Performance Standards (MASPS) for Traffic Information Service—Broadcast (TIS–B) RTCA Paper No. 034–05/PMC–385, prepared by SC–186.
- Final Draft, Revised DO–258, Interoperability Requirements for ATS Applications Using ARINC 622 Data Communications, RTCA Paper No. 035–05/PMC–386, prepared by SC–189.
- Final Draft, Revised D246B, GNSS Based Precision Approach Local Area Augmentation System (LAAS)—Signal-in-Space interface Control Document (ICD), RTCA Paper No. 039–05/PMC–388, prepared by SC–159.
- Discussion:
- Airport Security Access Control Systems—Possible new Special Committee.
- Special Committee Chairman's Reports.
- Action Item Review:
- Review/Status–All open action items.
- Closing Session (Other Business, Document Production, Date and Place of Next Meeting, Adjourn.

Attendance is open to the interested public but limited to space availability. With the approval of the chairmen, members of the public may present oral statements at the meeting. Persons wishing to present statements or obtain information should contact the person listed in the **FOR FURTHER INFORMATION CONTACT** section. Members of the public may present a written statement to the committee at any time.

Issued in Washington, DC, on March 18, 2005.

**Natalie Ogletree,**

*FAA General Engineer, RTCA Advisory Committee.*

[FR Doc. 05–6071 Filed 3–28–05; 8:45 am]

BILLING CODE 4910–13–M

## DEPARTMENT OF TRANSPORTATION

### Federal Aviation Administration

### RTCA Special Committee 202: Portable Electronic Devices

**AGENCY:** Federal Aviation Administration (FAA), DOT.

**ACTION:** Ntoice of RTCA Special Committee 2002 meeting.

**SUMMARY:** The FAA is issuing this notice to advise the public of a meeting of RTCA Special Committee 202: Portable Electronic Devices.

**DATES:** The meeting will be held on April 12–14, 2005 from 9 a.m. to 4:30 p.m.

**ADDRESSES:** The meeting will be held at RTCA, Inc., 1828 L Street, NW., Suite 805, Washington, DC, 20036–5133.

**FOR FURTHER INFORMATION CONTACT:** RTCA Secretariat, 1828 L Street, NW., Suite 805, Washington, DC, 20036–5133; telephone (202) 833–9339; fax (202) 833–9434; Web site *http://www.rtca.orig.*

**SUPPLEMENTARY INFORMATION:** Pursuant to section 10(a)(2) of the Federal Advisory Committee Act (Pub. L. 92–463, 5 U.S.C., Appendix 2), notice is hereby given for a Special Committee 202 meeting. The agenda will include:

- April 12:
- Working Groups 1 through 4 meet all day.
- April 13–14:
- Opening Plenary Session (Welcome and Introductory Remarks, Review Agency, Review/Approve previous Common Plenary Summary, Review Open Action Items).
- Update from CEA PEDs Working Group.
- Update from Regulatory Agencies (FAA, UK–CAA, Canadian TSB or other members present).
- Update from EUROCAE Working Group 58.
- Recommendations on common document with EUROCAE Working Group WG–58.
- Phase 2 work statement, committee structure, work plan, and schedule—Do we neet to set up focus groups on certification of aircraft recommendations, FCC cellphone prohibition assessment, and/or on FCC emissions mask recommendations.
- FCC Overview of processes and regulations.
- Overview of process and schedule milestones for FCC regulations revisions including update/status of FCC NPRM Docket O. WT 04–435 ''Cellular Telephones on Airborne Aircraft''.
- Overview of CFR 47 15.521 ''Technical Requirements applicable to all UWB devices''.
- UWB Technology overview.
- Regulatory aspects pertaining to UWB devices.
- Technical characterization of UWB devices.
- GSM mobile phone technology demonstration and tutorial.
- Phase 2 work—Break-out sessions for working groups.
- Working Groups report out/each working group will cover the following topics:
- Changes in WG Leadership.
- Significant issues with or changes to Phase 2 work plan.
- Revisions or clarifications to the SC–202 Terms of Reference (TOR).
- Future meetings and teleconference plans.
- Issues requiring plenary decisions.
- Working Group 1 (PEDs characterization, test, and evaluation).
- Working Group 2 (Aircraft test and analysis).
- Working Group 3 (Aircraft systems susceptibility).
- Working Group 4 (Risk assessment, practical application, and final documentation).
- Human Factors sub-group.
- RF–ID Tags for Phase 2 work by John Dimtroff FAA Seattle ACO.
- Closing Session (Other Business, Date and Place of Next Meeting, Closing Remarks, Adjourn).

Attendance is open to the interested public but limited to space availability. With the approval of the chairmen, members of the public may present oral statements at the meeting. Persons wishing to present statements or obtain information should contact the person listed in the **FOR FURTHER INFORMATION CONTACT** section. Members of the public may present a written statement to the committee at any time.

Issued in Washington, DC, on March 28, 2005.

**Natalie Ogletree,**

*FAA General Engineer, RTCA Advisory Committee.*

[FR Doc. 05–6070 Filed 3–28–05; 8:45 am]

BILLING CODE 4910–13–M

## DEPARTMENT OF TRANSPORTATION

### Federal Railroad Administration

### Broad Agency Announcement 2005–1, Funds Availability for Demonstration Projects and Technology Advancements Under the Next Generation High-Speed Rail Program

**AGENCY:** Federal Railroad Administration (FRA), Department of Transportation (DOT).

**ACTION:** Notice of funds availability: Broad agency announcement (BAA) for research projects and technology advancements under the Next Generation High-Speed Rail Program.

#### Purpose and Scope

The Federal Railroad Administration (FRA) is soliciting proposal concept papers for various demonstration projects and technology advancements which have the potential to advance the deployment of high-speed rail service in the United States. Emphasis is on technologies which would permit cost-effective upgrading and use of existing infrastructure.

Technologies most likely to help facilitate the deployment of high-speed rail service are those which will (a) bring about cost reductions in constructing and maintaining equipment, track, and facilities; (b) reduce operating costs by providing more efficient operations; (c) improve the reliability of equipment and infrastructure components by reducing failures and/or reducing false failure detections; (d) improve safety by reducing human and technology failures; (e) enhance revenue-generating capability by attracting greater ridership through reducing trip times, upgrading customer service quality, increasing reliability, or improving on-time performance; or (f) enhance the social benefits or environmental aspects of higher speed rail.

#### Eligible Participants

Any responsible source may submit a proposal concept paper for consideration, including, but not limited to, state or local governments, or organizations of state or local governments, universities or institutions of higher education, hospitals, non-profit organizations, private individuals, corporations, businesses or commercial organizations, except that any business owned in whole or in part by the Federal Government is not eligible. Although businesses owned in whole or in part by the Federal Government are not eligible for funding under the Program, they may contract with eligible

participants. Cooperative arrangements (*e.g.*, joint ventures, limited partnerships, teaming arrangements, or collaboration and consortium arrangements) are permitted and encouraged.

Small, Small Disadvantaged (SD), and Service-Disabled Veteran-Owned Business Concerns, and Veteran-Owned (VO) and Woman-Owned (WO), and Historically Underutilized Business Zone (HUBZone) Small Business Concerns, and Historically Black Colleges and Universities (HBCU) and Minority Institutions (MIs) are encouraged to submit proposal concept papers on their own and/or in collaboration with others. However, no portion of this BAA will be set aside or reserved exclusively for these types of organizations.

**BAA Time Period**

This BAA will be open from the date of posting through December 30, 2005. The FRA will accept proposal concept papers as of the posting date. Unless BAA 2005–1 is superseded or canceled, FRA will continue to accept concept submissions and inquiries through December 30, 2005. Although the BAA is open for an extended period, interested parties would be well advised to submit proposals as early as possible. Reviews will be conducted continuously on receipt of concept papers.

**Source for BAA Documents**

The BAA 2005–1 package may be downloaded or printed from the following Internet address: *http://www.fra.dot.gov/,* and then through the choices of Passenger Rail (from upper left home page menu), Financial Assistance (on the drop down menu), Funding for High Speed Rail (center of Financial Assistance page), Rail Demonstration Funding Opportunities, Broad Agency Announcement. The FRA does not intend to make the BAA 2005–1 Package available in paper copy.

Issued in Washington, DC on March 22, 2005.

**Mark Yachmetz,**

*Associate Administrator for Railroad Development.*

[FR Doc. 05–6075 Filed 3–28–05; 8:45 am]

**BILLING CODE 4910–06–P**

## DEPARTMENT OF TRANSPORTATION

### Maritime Administration

**[Docket Number 2005 20683]**

### Requested Administrative Waiver of the Coastwise Trade Laws

**AGENCY:** Maritime Administration, Department of Transportation.

**ACTION:** Invitation for public comments on a requested administrative waiver of the Coastwise Trade Laws for the vessel SEA BISCUIT.

**SUMMARY:** As authorized by Public Law 105–383 and Public Law 107–295, the Secretary of Transportation, as represented by the Maritime Administration (MARAD), is authorized to grant waivers of the U.S.-build requirement of the coastwise laws under certain circumstances. A request for such a waiver has been received by MARAD. The vessel, and a brief description of the proposed service, is listed below. The complete application is given in DOT docket 2005–20683 at *http://dms.dot.gov*. Interested parties may comment on the effect this action may have on U.S. vessel builders or businesses in the U.S. that use U.S.-flag vessels. If MARAD determines, in accordance with Public Law 105–383 and MARAD's regulations at 46 CFR part 388 (68 FR 23084; April 30, 2003), that the issuance of the waiver will have an unduly adverse effect on a U.S.-vessel builder or a business that uses U.S.-flag vessels in that business, a waiver will not be granted. Comments should refer to the docket number of this notice and the vessel name in order for MARAD to properly consider the comments. Comments should also state the commenter's interest in the waiver application, and address the waiver criteria given in § 388.4 of MARAD's regulations at 46 CFR part 388.

**DATES:** Submit comments on or before April 28, 2005.

**ADDRESSES:** Comments should refer to docket number MARAD–2005 20683. Written comments may be submitted by hand or by mail to the Docket Clerk, U.S. DOT Dockets, Room PL–401, Department of Transportation, 400 7th St., SW., Washington, DC 20590–0001. You may also send comments electronically via the Internet at *http://dmses.dot.gov/submit/*. All comments will become part of this docket and will be available for inspection and copying at the above address between 10 a.m. and 5 p.m., e.t., Monday through Friday, except Federal holidays. An electronic version of this document and all documents entered into this docket is available on the World Wide Web at *http://dms.dot.gov.*

**FOR FURTHER INFORMATION CONTACT:** Michael Hokana, U.S. Department of Transportation, Maritime Administration, MAR–830, Room 7201, 400 Seventh Street, SW., Washington, DC 20590. Telephone (202) 366–0760.

**SUPPLEMENTARY INFORMATION:** As described by the applicant the intended service of the vessel SEA BISCUIT is:

*Intended Use:* ''Coastal charters.''

*Geographic Region:* ''West Coast of the United States, which includes California, Washington and Oregon.''

Dated: March 16, 2005.

By order of the Maritime Administrator.

**Joel C. Richard,**

*Secretary, Maritime Administration.*

[FR Doc. 05–6178 Filed 3–28–05; 8:45 am]

**BILLING CODE 4910–81–P**

## DEPARTMENT OF TRANSPORTATION

### Maritime Administration

**[Docket Number 2005 20685]**

### Requested Administrative Waiver of the Coastwise Trade Laws

**AGENCY:** Maritime Administration, Department of Transportation.

**ACTION:** Invitation for public comments on a requested administrative waiver of the Coastwise Trade Laws for the vessel KNOT A PROBLEM.

**SUMMARY:** As authorized by Public Law 105–383 and Public Law 107–295, the Secretary of Transportation, as represented by the Maritime Administration (MARAD), is authorized to grant waivers of the U.S.-build requirement of the coastwise laws under certain circumstances. A request for such a waiver has been received by MARAD. The vessel, and a brief description of the proposed service, is listed below. The complete application is given in DOT docket 2005–20685 at *http://dms.dot.gov*. Interested parties may comment on the effect this action may have on U.S. vessel builders or businesses in the U.S. that use U.S.-flag vessels. If MARAD determines, in accordance with Public Law 105–383 and MARAD's regulations at 46 CFR part 388 (68 FR 23084; April 30, 2003), that the issuance of the waiver will have an unduly adverse effect on a U.S.-vessel builder or a business that uses U.S.-flag vessels in that business, a waiver will not be granted. Comments should refer to the docket number of this notice and the vessel name in order for MARAD to properly consider the comments. Comments should also state

the commenter's interest in the waiver application, and address the waiver criteria given in § 388.4 of MARAD's regulations at 46 CFR part 388.

**DATES:** Submit comments on or before April 28, 2005.

**ADDRESSES:** Comments should refer to docket number MARAD 2005 20685. Written comments may be submitted by hand or by mail to the Docket Clerk, U.S. DOT Dockets, Room PL–401, Department of Transportation, 400 7th St., S.W., Washington, DC 20590–0001. You may also send comments electronically via the Internet at *http://dmses.dot.gov/submit/*. All comments will become part of this docket and will be available for inspection and copying at the above address between 10 a.m. and 5 p.m., e.t., Monday through Friday, except Federal holidays. An electronic version of this document and all documents entered into this docket is available on the World Wide Web at *http://dms.dot.gov.*

**FOR FURTHER INFORMATION CONTACT:** Michael Hokana, U.S. Department of Transportation, Maritime Administration, MAR–830 Room 7201, 400 Seventh Street, SW., Washington, DC 20590. Telephone (202) 366–0760.

**SUPPLEMENTARY INFORMATION:** As described by the applicant the intended service of the vessel KNOT A PROBLEM is:

*Intended Use:* ''Small group charters—no more than 6 passengers in Long Island Sound (Summer) and Aventura, South Florida (Winter).''

*Geographic Region:* ''Long Island Sound (Summer) and Aventura, South Florida (Winter).''

Dated: March 16, 2005.

By order of the Maritime Administrator.

**Joel C. Richard,**

*Secretary, Maritime Administration.*

[FR Doc. 05–6179 Filed 3–28–05; 8:45 am]

**BILLING CODE 4910–81–P**

---

## DEPARTMENT OF TRANSPORTATION

### Maritime Administration

**[Docket Number 2005 20709]**

### Requested Administrative Waiver of the Coastwise Trade Laws

**AGENCY:** Maritime Administration, Department of Transportation.

**ACTION:** Invitation for public comments on a requested administrative waiver of the Coastwise Trade Laws for the vessel SOLSTICE.

**SUMMARY:** As authorized by Public Law 105–383 and Public Law 107–295, the Secretary of Transportation, as represented by the Maritime Administration (MARAD), is authorized to grant waivers of the U.S.-build requirement of the coastwise laws under certain circumstances. A request for such a waiver has been received by MARAD. The vessel, and a brief description of the proposed service, is listed below. The complete application is given in DOT docket 2005–20709 at *http://dms.dot.gov.* Interested parties may comment on the effect this action may have on U.S. vessel builders or businesses in the U.S. that use U.S.-flag vessels. If MARAD determines, in accordance with Public Law 105–383 and MARAD's regulations at 46 CFR part 388 (68 FR 23084; April 30, 2003), that the issuance of the waiver will have an unduly adverse effect on a U.S.-vessel builder or a business that uses U.S.-flag vessels in that business, a waiver will not be granted. Comments should refer to the docket number of this notice and the vessel name in order for MARAD to properly consider the comments. Comments should also state the commenter's interest in the waiver application, and address the waiver criteria given in § 388.4 of MARAD's regulations at 46 CFR part 388.

**DATES:** Submit comments on or before April 28, 2005.

**ADDRESSES:** Comments should refer to docket number MARAD–2005 20709. Written comments may be submitted by hand or by mail to the Docket Clerk, U.S. DOT Dockets, Room PL–401, Department of Transportation, 400 7th St., SW., Washington, DC 20590–0001. You may also send comments electronically via the Internet at *http://dmses.dot.gov/submit/*. All comments will become part of this docket and will be available for inspection and copying at the above address between 10 a.m. and 5 p.m., e.t., Monday through Friday, except federal holidays. An electronic version of this document and all documents entered into this docket is available on the World Wide Web at *http://dms.dot.gov.*

**FOR FURTHER INFORMATION CONTACT:** Michael Hokana, U.S. Department of Transportation, Maritime Administration, MAR–830, Room 7201, 400 Seventh Street, SW., Washington, DC 20590. Telephone (202) 366–0760.

**SUPPLEMENTARY INFORMATION:** As described by the applicant the intended service of the vessel SOLSTICE is:

*Intended Use:* ''Small group charters for sailing instruction and eco-tourism.''

*Geographic Region:* ''Florida.''

Dated: March 22, 2005.

By order of the Maritime Administrator.

**Joel C. Richard,**

*Secretary, Maritime Administration.*

[FR Doc. 05–6181 Filed 3–28–05; 8:45 am]

**BILLING CODE 4910–81–P**

---

## DEPARTMENT OF TRANSPORTATION

### Maritime Administration

**[Docket Number 2005 20684]**

### Requested Administrative Waiver of the Coastwise Trade Laws

**AGENCY:** Maritime Administration, Department of Transportation.

**ACTION:** Invitation for public comments on a requested administrative waiver of the Coastwise Trade Laws for the vessel NUBIAN.

**SUMMARY:** As authorized by Public Law 105–383 and Public Law 107–295, the Secretary of Transportation, as represented by the Maritime Administration (MARAD), is authorized to grant waivers of the U.S.-build requirement of the coastwise laws under certain circumstances. A request for such a waiver has been received by MARAD. The vessel, and a brief description of the proposed service, is listed below. The complete application is given in DOT docket 2005–20684 at *http://dms.dot.gov.* Interested parties may comment on the effect this action may have on U.S. vessel builders or businesses in the U.S. that use U.S.-flag vessels. If MARAD determines, in accordance with Public Law 105–383 and MARAD's regulations at 46 CFR part 388 (68 FR 23084; April 30, 2003), that the issuance of the waiver will have an unduly adverse effect on a U.S.-vessel builder or a business that uses U.S.-flag vessels in that business, a waiver will not be granted. Comments should refer to the docket number of this notice and the vessel name in order for MARAD to properly consider the comments. Comments should also state the commenter's interest in the waiver application, and address the waiver criteria given in § 388.4 of MARAD's regulations at 46 CFR part 388.

**DATES:** Submit comments on or before April 28, 2005.

**ADDRESSES:** Comments should refer to docket number MARAD–2005 20684. Written comments may be submitted by hand or by mail to the Docket Clerk, U.S. DOT Dockets, Room PL–401, Department of Transportation, 400 7th St., SW., Washington, DC 20590–0001. You may also send comments electronically via the Internet at http://dmses.dot.gov/submit/. All comments

will become part of this docket and will be available for inspection and copying at the above address between 10 a.m. and 5 p.m., e.t., Monday through Friday, except Federal holidays. An electronic version of this document and all documents entered into this docket is available on the World Wide Web at *http://dms.dot.gov.*

**FOR FURTHER INFORMATION CONTACT:** Michael Hokana, U.S. Department of Transportation, Maritime Administration, MAR–830 Room 7201, 400 Seventh Street, SW., Washington, DC 20590. Telephone 202–366–0760.

**SUPPLEMENTARY INFORMATION:** As described by the applicant the intended service of the vessel NUBIAN is:

*Intended Use:* ''Intended use is for education (sailing lessons), day and overnight sails very similar to bareboat charters with the exception of U.S. Coast Guard license captain/sailing instructor aboard to ensure safety and enjoyment of the experience.''

*Geographic Region:* ''Texas, Mississippi, Louisiana, Alabama and Florida coasts including the waterways and tributaries.''

Dated: March 16, 2005.

By order of the Maritime Administrator.

**Joel C. Richard,**

*Secretary, Maritime Administration.*

[FR Doc. 05–6177 Filed 3–28–05; 8:45 am]

**BILLING CODE 4910–81–P**

---

## DEPARTMENT OF TRANSPORTATION

### Maritime Administration

**[Docket Number 2005 20710]**

### Requested Administrative Waiver of the Coastwise Trade Laws

**AGENCY:** Maritime Administration, Department of Transportation.

**ACTION:** Invitation for public comments on a requested administrative waiver of the Coastwise Trade Laws for the vessel SIRIUS.

**SUMMARY:** As authorized by Public Law 105–383 and Public Law 107–295, the Secretary of Transportation, as represented by the Maritime Administration (MARAD), is authorized to grant waivers of the U.S.-build requirement of the coastwise laws under certain circumstances. A request for such a waiver has been received by MARAD. The vessel, and a brief description of the proposed service, is listed below. The complete application is given in DOT docket 2005–20710 at *http://dms.dot.gov.* Interested parties may comment on the effect this action may have on U.S. vessel builders or businesses in the U.S. that use U.S.-flag vessels. If MARAD determines, in accordance with Public Law 105–383 and MARAD's regulations at 46 CFR part 388 (68 FR 23084; April 30, 2003), that the issuance of the waiver will have an unduly adverse effect on a U.S.-vessel builder or a business that uses U.S.-flag vessels in that business, a waiver will not be granted. Comments should refer to the docket number of this notice and the vessel name in order for MARAD to properly consider the comments. Comments should also state the commenter's interest in the waiver application, and address the waiver criteria given in § 388.4 of MARAD's regulations at 46 CFR part 388.

**DATES:** Submit comments on or before April 28, 2005.

**ADDRESSES:** Comments should refer to docket number MARAD–2005–20710. Written comments may be submitted by hand or by mail to the Docket Clerk, U.S. DOT Dockets, Room PL–401, Department of Transportation, 400 7th St., SW., Washington, DC 20590–0001. You may also send comments electronically via the Internet at *http://dmses.dot.gov/submit/.* All comments will become part of this docket and will be available for inspection and copying at the above address between 10 a.m. and 5 p.m., e.t., Monday through Friday, except federal holidays. An electronic version of this document and all documents entered into this docket is available on the World Wide Web at *http://dms.dot.gov.*

**FOR FURTHER INFORMATION CONTACT:** Michael Hokana, U.S. Department of Transportation, Maritime Administration, MAR–830, Room 7201, 400 Seventh Street, SW., Washington, DC 20590. Telephone (202) 366–0760.

**SUPPLEMENTARY INFORMATION:** As described by the applicant the intended service of the vessel SIRIUS is:

*Intended Use:* ''Bareboat and Captained Charters.''

*Geographic Region:* ''Florida Keys.''

Dated: March 21, 2005.

By order of the Maritime Administrator.

**Joel C. Richard,**

*Secretary, Maritime Administration.*

[FR Doc. 05–6191 Filed 3–28–05; 8:45 am]

**BILLING CODE 4910–81–P**

---

## DEPARTMENT OF TRANSPORTATION

### Maritime Administration

**[Docket Number 2005 20711]**

### Requested Administrative Waiver of the Coastwise Trade Laws

**AGENCY:** Maritime Administration, Department of Transportation.

**ACTION:** Invitation for public comments on a requested administrative waiver of the Coastwise Trade Laws for the vessel DECEPTION.

**SUMMARY:** As authorized by Public Law 105–383 and Public Law 107–295, the Secretary of Transportation, as represented by the Maritime Administration (MARAD), is authorized to grant waivers of the U.S.-build requirement of the coastwise laws under certain circumstances. A request for such a waiver has been received by MARAD. The vessel, and a brief description of the proposed service, is listed below. The complete application is given in DOT docket 2005–20711 at *http://dms.dot.gov.* Interested parties may comment on the effect this action may have on U.S. vessel builders or businesses in the U.S. that use U.S.-flag vessels. If MARAD determines, in accordance with Public Law 105–383 and MARAD's regulations at 46 CFR part 388 (68 FR 23084; April 30, 2003), that the issuance of the waiver will have an unduly adverse effect on a U.S.-vessel builder or a business that uses U.S.-flag vessels in that business, a waiver will not be granted. Comments should refer to the docket number of this notice and the vessel name in order for MARAD to properly consider the comments. Comments should also state the commenter's interest in the waiver application, and address the waiver criteria given in § 388.4 of MARAD's regulations at 46 CFR part 388.

**DATES:** Submit comments on or before April 28, 2005.

**ADDRESSES:** Comments should refer to docket number MARAD–2005 20711. Written comments may be submitted by hand or by mail to the Docket Clerk, U.S. DOT Dockets, Room PL–401, Department of Transportation, 400 7th St., SW., Washington, DC 20590–0001. You may also send comments electronically via the Internet at *http://dmses.dot.gov/submit/.* All comments will become part of this docket and will be available for inspection and copying at the above address between 10 a.m. and 5 p.m., e.t., Monday through Friday, except Federal holidays. An electronic version of this document and all documents entered into this docket is

available on the World Wide Web at *http://dms.dot.gov.*

**FOR FURTHER INFORMATION CONTACT:** Michael Hokana, U.S. Department of Transportation, Maritime Administration, MAR–830 Room 7201, 400 Seventh Street, SW., Washington, DC 20590. Telephone (202) 366–0760.

**SUPPLEMENTARY INFORMATION:** As described by the applicant the intended service of the vessel DECEPTION is:

*Intended Use:* ''Occasional passenger for hire, incidental to main business of exclusive Grand Banks bare boat charters in Bellingham, Washington.

*Geographic Region:* ''Puget Sound'.

Dated: March 21, 2005.

By order of the Maritime Administrator.

**Joel C. Richard,**

*Secretary, Maritime Administration.*

[FR Doc. 05–6180 Filed 3–28–05; 8:45 am]

**BILLING CODE 4910–81–P**

---

## DEPARTMENT OF TRANSPORTATION

## National Highway Traffic Safety Administration

**[Docket No. NHTSA–2005–20455, Notice 1]**

## Spyker Automobielen B.V.; Receipt of Application for a Temporary Exemption From Federal Motor Vehicle Safety Standard No. 208 and Part 581 Bumper Standard

In accordance with the procedures of 49 CFR part 555, Spyker Automobielen B.V. (''Spyker'') has applied for a Temporary Exemption from S4.2.3 of Federal Motor Vehicle Safety Standard (FMVSS) No. 208, *Occupant Crash Protection*, and part 581 *Bumper Standard* for its C–8 vehicle. The basis of the application is that compliance would cause substantial economic hardship to a manufacturer that has tried in good faith to comply with the standard.[1]

We are publishing this notice of receipt of the application in accordance with the requirements of 49 U.S.C. 30113(b)(2), and have made no judgment on the merits of the application.

### I. Background

Spyker is a small publicly traded Dutch vehicle manufacturer established in 2002. Spyker manufactures hand-build high-performance automobiles similar to vehicles manufactured by Ferrari, Lamborghini, Saleen, and other high-performance vehicle manufacturers.[2] Spyker has manufactured between 40 and 45 automobiles in 2004, and has a back order approaching 80 vehicles.[3] Spyker anticipates sales of less than 50 vehicles per year in the United States.

Spyker indicates that it anticipated entering the U.S. market in 2008 with a fully compliant vehicle. Due to a recent racing success and consequent surge in public interest, the applicant wants to begin selling cars in the U.S. immediately. Further, the applicant indicates that ''market and investment pressure require introduction for the 2005 model year.''

### II. Why Spyker Needs a Temporary Exemption and How Spyker Has Tried in Good Faith to Comply With FMVSS No. 208 and the Bumper Standard

Spyker indicates that it has invested significant resources into making the C–8 compliant with applicable Federal regulations. However, because of the limited resources as well as the fluctuating value of the U.S. dollar, the petitioner argues that it cannot bring the C–8 into compliance with S4.2.3 of FMVSS No. 208 and Part 581 without generating immediate U.S. sales revenue. Specifically, Spyker's financial information submission shows a net operating loss of €343,000 (≈$452,760) for the fiscal year 2001; a net operating loss of €1,245,000 (≈$1,643,400) for the fiscal year 2002; a net operating loss of €4,808,000 (≈$6,346,560) for the fiscal year 2003; and a projected net operating loss of €4,500,000 (≈$5,940,000) for fiscal year 2004. This represents a cumulative net loss for a period of 4 years of €10,896,000 (≈$14,382,720).[4]

In short, the petitioner indicates that the cost of making the C–8 compliant with FMVSS No. 208 and Part 581 is beyond the company's current capabilities. Spyker requests a three-year exemption in order to develop compliant bumpers and advanced air bags. The petitioner anticipates the funding necessary for these compliance efforts will come from immediate sales of the C–8 in the United States.

### A. Federal Motor Vehicle Safety Standard No. 208

The petitioner states that the company's current assets cannot support air bag development at this time and that testing expenses, as well as reengineering and re-design delays would bankrupt the company. The petitioner states that a denial of the air bag exemption request will lead to the same losses as in 2004 for 2005, 2006 and 2007 (€4,500,000 per year). Granting of the petitioner s request would lead to a net operating loss of 2,500,000 in 2005, but a net gain of €375,000 in 2006 and a net gain of €4,534,000 in 2007. The estimated cost of designing an air bag system is $800,000 and the process takes six to twelve months.

Petitioner indicates that it had contacted at least two air bag manufacturers without success, and now plans on concentrating their efforts on designing advanced air bags that become mandatory in 2006.

### B. Part 581—Bumper Standard

Spyker indicates that it attempted to design compliant bumpers. Specifically, the petitioner investigated installing molded fiberglass bumpers with aluminum reinforcements. According to the petitioner, however, this design could alter the crashworthiness of the C–8. Thus, meeting the low impact damage criteria of Part 581 could reduce the high impact crashworthiness of the entire vehicle. The petitioner provided no discussion of additional efforts to develop compliant bumpers, or evaluation of other alternatives.

### III. Why an Exemption Would Be in the Public Interest

The petitioner put forth several arguments in favor of a finding that the requested exemption is consistent with the public interest. Specifically:

1. The petitioner argues that Part 581 is not a safety standard, but a standard designed to reduce costs associated with minor impacts.
2. With respect to air bags, the petitioner argues that the vehicles are designed with a ''frontal crush structure and occupant protection cell for use as a race vehicle.''
3. The vehicle would be equipped with labels reminding drivers to buckle up.
4. Spyker's engineering analysis shows that at impact speeds of less than 5 mph, there is no damage to the C–8's safety equipment (other than license plate lights).
5. The likelihood of minor damage is very low. The vehicle costs in excess of $200,000, and it is reasonable to assume that it would not be subject to normal ''wear-and-tear'' associated with typical bumper impacts.
6. Spyker does not anticipate selling more than 250 vehicles for a period of 3 years covered by the requested exemption. Thus, the impact of the exemption is expected to be minimal.

---

[1] To view the application using the Docket number listed above, please go to: *http://dms.dot.gov/search/searchFormSimple.cfm.*

[2] For more information on Spyker, *see http://www.spykercars.com/.*

[3] *http://www.spykercars.com/meta/investors/pdf/Financieel/first_halfjaar_report_2004.pdf.*

[4] All dollar values are based on an exchange rate of €1 = $1.32.

7. Spyker argues that granting the exemption would be consistent with the Agency's previous decisions.[5]

8. Spyker argues that granting the exemption would increase choices available to the U.S. driving population in the high-performance vehicle segment.

9. Spyker argues that granting the exemption would increase jobs in the U.S. associated with sales and maintenance of the C–8.

## IV. How You May Comment On Spyker Application

We invite you to submit comments on the application described above. You may submit comments [identified by DOT Docket No NHTSA–2005–20455] by any of the following methods:

- Web site: *http://dms.dot.gov*. Follow the instructions for submitting comments on the DOT electronic docket site by clicking on ''Help and Information'' or ''Help/Info.''
- Fax: 1–202–493–2251.
- Mail: Docket Management Facility, U.S. Department of Transportation, 400 Seventh Street, SW., Nassif Building, Room PL–401, Washington, DC 20590.
- Hand Delivery: Room PL–401 on the plaza level of the Nassif Building, 400 Seventh Street, SW., Washington, DC, between 9 am and 5 pm, Monday through Friday, except Federal Holidays.
- Federal eRulemaking Portal: Go to *http://www.regulations.gov*. Follow the online instructions for submitting comments.

*Instructions:* All submissions must include the agency name and docket number or Regulatory Identification Number (RIN) for this rulemaking. Note that all comments received will be posted without change to *http://dms.dot.gov*, including any personal information provided.

*Docket:* For access to the docket in order to read background documents or comments received, go to *http://dms.dot.gov* at any time or to Room PL–401 on the plaza level of the Nassif Building, 400 Seventh Street, SW., Washington, DC, between 9 a.m. and 5 p.m., Monday through Friday, except Federal holidays.

*Privacy Act:* Anyone is able to search the electronic form of all comments received into any of our dockets by the name of the individual submitting the comment (or signing the comment, if submitted on behalf of an association, business, labor union, etc.). You may review DOT's complete Privacy Act Statement in the **Federal Register** published on April 11, 2000 (Volume 65, Number 70; Pages 19477–78) or you may visit *http://dms.dot.gov*.

We shall consider all comments received before the close of business on the comment closing date indicated below. To the extent possible, we shall also consider comments filed after the closing date. We shall publish a notice of final action on the application in the **Federal Register** pursuant to the authority indicated below.

Comment closing date: April 28, 2005.

(49 U.S.C. 30113; delegations of authority at 49 CFR 1.50. and 501.8)

**FOR FURTHER INFORMATION CONTACT:** George Feygin in the Office of Chief Counsel, NCC–112, (Phone: 202–366–2992; Fax 202–366–3820; E-mail: *George.Feygin@nhtsa.dot.gov*).

Issued on: March 23, 2005.

**Stephen R. Kratzke,**

*Associate Administrator for Rulemaking.*

[FR Doc. 05–6073 Filed 3–28–05; 8:45 am]

**BILLING CODE 4910–59–P**

[5] *See* 69 FR 5658 (February 5, 2004), and 69 FR 3192 (January 22, 2004).

---

## DEPARTMENT OF TRANSPORTATION

### Pipeline and Hazardous Materials Safety Administration (PHMSA)

**[Docket No. PHMSA–04–19854]**

### Pipeline Safety: Meetings on Assuring Distribution Pipeline Integrity

**AGENCY:** Office of Pipeline Safety, Pipeline and Hazardous Materials Administration, DOT.

**ACTION:** Notice of meetings.

**SUMMARY:** The Office of Pipeline Safety (OPS) plans to conduct several work group meetings in 2005 to evaluate ways to enhance integrity of gas distribution pipeline systems. The work groups include representatives of OPS, state pipeline safety regulators, the gas distribution industry, the Gas Pipeline Technology Committee, the Fire Marshal's Association, and the public. The next meeting will be held March 29–31, 2005, in Dallas, Texas.

**ADDRESSES:** The March 29–31 meeting will be held at Hilton Suites Dallas North, 13402 Noel Road, Dallas, Texas 75240. The phone number for Hilton reservations is (972) 503–8701. The particular meeting rooms will be posted by the hotel each day.

**FOR FURTHER INFORMATION CONTACT:** Mike Israni, OPS, (202) 366–4571; *mike.israni@dot.gov.*

**SUPPLEMENTARY INFORMATION:** OPS has implemented regulations over the last five years to address integrity management of hazardous liquid and gas transmission pipelines. OPS has now begun an effort to consider whether requirements should be imposed to enhance the integrity of gas distribution pipeline systems and, if so, how those requirements should be structured. OPS is working with a work group consisting of representatives of state pipeline safety regulators, the gas distribution industry, the Gas Pipeline Technology Committee, the Fire Marshal's Association, and the public. Members of this group plan to meet periodically in 2005 to evaluate various topics regarding the need for and nature of potential distribution integrity management requirements.

Executive represents of the study group met in Dulles, VA on March 16 and 17, 2005, to begin this effort. That group concluded that further investigation of potential approaches to assuring distribution integrity is needed. The executive group further concluded that the most useful approach is likely to include a combination of a high-level, risk-based federal regulation with implementation guidance included in a consensus standard or a guidance document. States, which are principally responsible for regulating distribution system safety, could impose additional requirements beyond the federal regulation and could adopt all or portions of the guidance. The executive group also concluded that a program of public education could be important to reducing the frequency of damage caused by excavations near distribution pipelines and that research and development should be conducted to identify improved means of assessing the integrity of distribution pipelines.

The continued evaluation of the potential need for distribution integrity management requirements and/or guidance will begin with meetings to be held at Hilton Suites Dallas North, 13402 Noel Road Dallas, Texas 75240, on March 29–31, 2005. Meetings on March 29 and 30 will be held from 8:30 a.m. to 4:30 p.m., and March 31 from 8:30 a.m. to 11 a.m. The participants will be formed into four study groups to evaluate strategic options, risk control practices, protection against outside force damage, and data issues related to understanding distribution integrity threats. The agenda for this meeting will include:

### Joint Meeting

Introduction & Planned Report to Congress.

Mission, Action Plan and Options.

Group Structure & Responsibilities.

Charge to Sub Groups.

Steering Committee Decisions and Direction.

Industry Views on Plan, Options & Team Responsibilities.

**Individual Study Groups**

Each sub group will discuss what it needs to do to accomplish its mission. Each will:

- Identify specific tasks that need to be accomplished.
- Identify inputs needed from other sub groups or other sources.
- Identify support needs to accomplish needed tasks.
- Develop a draft schedule for accomplishing its mission.

The sub groups will report their findings in a joint session before the meeting is adjourned.

OPS expects that this effort will involve a series of meetings by each sub group, and the Steering Committee. The date and time of future meetings will be set to suit the schedules of the participants. OPS will announce the time and place of future meetings on the Web site (*http://ops.dot.gov*). OPS will also post on that web site minutes of meetings, copies of nonproprietary documents considered during the meetings, and work group products.

Interested persons may attend these meetings as observers. Observers will be given an opportunity to provide comments at the end of day.

**Authority:** 49 U.S.C. 60102, 60115.

**Florence L. Hamn,**

*Director, Office of Regulations, Office of Pipeline Safety.*

[FR Doc. 05–6067 Filed 3–28–05; 8:45 am]

**BILLING CODE 4910–60–M**

## DEPARTMENT OF TRANSPORTATION

### Surface Transportation Board

**[STB Finance Docket No. 34668]**

### Keokuk Junction Railway Co.—Temporary Trackage Rights Exemption—BNSF Railway Company

BNSF Railway Company (BNSF) has agreed to grant temporary overhead trackage rights to Keokuk Junction Railway Co. (KJRY) over BNSF's lines between Blair Junction, IL (Beardstown Subdivision milepost 157.1), and Bushnell, IL (Brookfield Subdivision milepost 191.5), a distance of approximately 3.5 miles.

The transaction was scheduled to be consummated on March 18, 2005, and the temporary trackage rights will expire on or before March 17, 2006. The purpose of the temporary trackage rights is to allow KJRY to bridge its trains between Blair Junction and a point just to the east of Bushnell until the diamond crossings at Bushnell are restored.[1]

As a condition to this exemption, any employees affected by the acquisition of the temporary trackage rights will be protected by the conditions imposed in *Norfolk and Western Ry. Co.—Trackage Rights—BN,* 354 I.C.C. 605 (1978), as modified in *Mendocino Coast Ry., Inc.—Lease and Operate,* 360 I.C.C. 653 (1980), and any employee affected by the discontinuance of those trackage rights will be protected by the conditions set out in *Oregon Short Line R. Co.—Abandonment—Goshen,* 360 I.C.C.91 (1979).

This notice is filed under 49 CFR 1180.2(d)(8). If it contains false or misleading information, the exemption is void *ab initio.* Petitions to revoke the exemption under 49 U.S.C. 10502(d) may be filed at any time. The filing of a petition to revoke will not automatically stay the transaction.

An original and 10 copies of all pleadings, referring to STB Finance Docket No. 34668, must be filed with the Surface Transportation Board, 1925 K Street, NW., Washington, DC 20423–0001. In addition, a copy of each pleading must be served on Daniel A. LaKemper, Keokuk Junction Railway Co., 1318 S. Johanson Road, Peoria, IL 61607.

Board decisions and notices are available on our Web site at *http://www.stb.dot.gov.*

Decided: March 22, 2005.

By the Board, David M. Konschnik, Director, Office of Proceedings.

**Vernon A. Williams,**

*Secretary.*

[FR Doc. 05–6025 Filed 3–28–05; 8:45 am]

**BILLING CODE 4915–01–P**

[1] The Board ordered the restoration of the diamond crossings in *Keokuk Junction Railway Company—Feeder Line Acquisition—Line of Toledo, Peoria and Western Railway Corporation Between La Harpe and Hollis, IL,* STB Finance Docket No. 34335 (STB served Feb. 7, 2005).

## DEPARTMENT OF TRANSPORTATION

### Surface Transportation Board

**[STB Docket No. AB–32 (Sub–No. 93X), STB Docket No. 355 (Sub–No. 31X)]**

### Boston and Maine Corporation—Discontinuance of Service Exemption—in Suffolk County, MA; Springfield Terminal Railway Company—Discontinuance of Service Exemption—in Suffolk County, MA

On March 11, 2005, the Boston and Maine Corporation (B&M) and Springfield Terminal Railway Company (ST) jointly filed with the Board a petition under 49 U.S.C. 10502 for exemption from the provisions of 49 U.S.C. 10903. B&M and ST seek to discontinue service over a line of railroad known as the Mystic Wharf Branch, extending from milepost 0.0 to milepost 1.45 in Suffolk County, MA.[1] The line traverses U.S. Postal Service ZIP Code 02129 and includes no stations.

The line does not contain federally granted rights-of-way. Any documentation in the possession of B&M will be made available promptly to those requesting it.

The interest of railroad employees will be protected by the conditions set forth in *Oregon Short Line R.Co.—Abandonment—Goshen,* 360 I.C.C. 91 (1979).

By issuing this notice, the Board is instituting an exemption proceeding pursuant to 49 U.S.C. 10502(b). A final decision will be issued by June 29, 2005.

Any offer of financial assistance (OFA) under 49 CFR 1152.27(b)(2) will be due no later than 10 days after service of a decision granting the petition for exemption. Each OFA must be accompanied by a $1,200 filing fee. *See* 49 CFR 1002.2(f)(25).[2]

All filings in response to this notice must refer to STB Docket Nos. AB–32 (Sub-No. 93) and AB–355 (Sub-No. 31X), and must be sent to: (1) Surface Transportation Board, 1925 K Street, NW., Washington, DC 20423–0001, and (2) Katherine E. Potter, Law Department, Iron House Park, North Billerica, MA 01862. Replies to the petition are due on or before April 20, 2005.

Persons seeking further information concerning discontinuance procedures may contact the Board's Office of Public Services at (202) 565–1592 or refer to the full abandonment or discontinuance regulations at 49 CFR part 1152. Questions concerning environmental issues may be directed to the Board's Section of Environmental Analysis at

[1] In 2003, B&M sold the underlying real estate, track and related structures of the Mystic Wharf Branch to the Massachusetts Port Authority (Massport), and retained a perpetual easement to perform rail service. Massport also entered into an operating agreement with B&M and ST for ST to provide rail service on the line. *See Massachusetts Port Authority—Acquisition Exemption—Certain Assets of Boston and Maine Corporation,* STB Finance Docket No. 34276 (STB served Mar. 25, 2003). Because B&M is seeking authority only to discontinue service over the line, B&M remains obligated to seek abandonment authority to extinguish fully its common carrier rights and obligations under the perpetual easement.

[2] Because this is a discontinuance proceeding and not an abandonment, trail use/rail banking and public use conditions are not appropriate. Likewise, no environmental or historic documentation is required under 49 CFR 1105.6(c) and 1105.8.

(202) 565–1539. [Assistance for the hearing impaired is available through the Federal Information Relay Service (FIRS) at 1–800–877–8339.]

Board decisions and notices are available on our Web site at *http://www.stb.dot.gov.*

Decided: March 22, 2005.

By the Board, David M. Konschnik, Director, Office of Proceedings.

**Vernon A. Williams,**

*Secretary.*

[FR Doc. 05–6129 Filed 3–28–05; 8:45 am]

**BILLING CODE 4915–01–P**

## DEPARTMENT OF THE TREASURY

### Submission for OMB Review; Comment Request

March 22, 2005.

The Department of Treasury has submitted the following public information collection requirement(s) to OMB for review and clearance under the Paperwork Reduction Act of 1995, Pub. L. 104–13. Copies of the submission(s) may be obtaining by calling the Treasury Bureau Clearance Officer listed. Comments regarding this information collection should be addressed to the OMB reviewer listed and to the Treasury Department Clearance Officer, Department of the Treasury, Room 11000, 1750 Pennsylvania Avenue, NW., Washington, DC 20220.

**DATES:** Written comments should be received on or before April 28, 2005, to be assured of consideration.

**Financial Management Service (FMS)**

*OMB Number:* 1510–0004.

*Form Number:* FMS 285–A.

*Type of Review:* Extension.

*Title:* Schedule of Excess Risks.

*Description:* Listing of Excess Risks written or assumed by Treasury Certified Companies for compliance with Treasury Regulations to assist in determination of solvency of Certified Companies for the benefit of writing Federal surety bonds.

*Respondents:* Business or other for-profit.

*Estimated Number of Respondents:* 289.

*Estimated Burden Hours Per Respondent:* 20 hours.

*Frequency of Response:* Quarterly, annually, other (applications).

*Estimated Total Reporting Burden:* 5,780 hours.

*Clearance Officer:* Jiovannah L. Diggs, (202) 874–7662, Financial Management Service, Administrative Programs Division, Records and Information Management Program, 3700 East West Highway, Room 144, Hyattsville, MD 20782.

*OMB Reviewer:* Joseph F. Lackey, Jr., (202) 395–7316, Office of Management and Budget, Room 10235, New Executive Office Building, Washington, DC 20503.

**Lois K. Holland,**

*Treasury PRA Clearance Officer.*

[FR Doc. 05–6090 Filed 3–28–05; 8:45 am]

**BILLING CODE 4810–35–M**

## DEPARTMENT OF THE TREASURY

### Submission for OMB Review; Comment Request

March 22, 2005.

The Department of Treasury has submitted the following public information collection requirement(s) to OMB for review and clearance under the Paperwork Reduction Act of 1995, Pub. L. 104–13. Copies of the submission(s) may be obtained by calling the Treasury Bureau Clearance Officer listed. Comments regarding this information collection should be addressed to the OMB reviewer listed and to the Treasury Department Clearance Officer, Department of the Treasury, Room 11000, 1750 Pennsylvania Avenue, NW., Washington, DC 20220.

**DATES:** Written comments should be received on or before April 28, 2005, to be assured of consideration.

**Financial Crimes Enforcement Network (FinCEN)**

*OMB Number:* 1505–0184.

*Form Number:* None.

*Type of Review:* Extension.

*Title:* Correspondent Accounts for Foreign Shell Banks; Record Keeping and Termination of Correspondent Accounts.

*Description:* These rules prohibit domestic financial institutions from maintaining correspondent accounts with foreign shell banks and require such institutions to maintain records of the owners, and agents, for service of legal process of foreign banks.

*Respondents:* Business or other for-profit, not-for-profit institutions.

*Estimated Number of Respondents/Recordkeepers:* 9,000.

*Estimated Burden Hours Per Respondent/Recordkeeper:* 34 hours.

*Frequency of Response:* On occasion, biennially.

*Estimated Total Reporting/Recordkeeping Burden:* 306,000 hours.

*Clearance Officer:* Steve Rudzinski, (703) 905–3845, Financial Crimes Enforcement Network, 2070 Chain Bridge Road, Suite 200, Vienna, VA 22182.

*OMB Reviewer:* Joseph F. Lackey, Jr., (202) 395–7316, Office of Management and Budget, Room 10235, New Executive Office Building, Washington, DC 20503.

**Lois K. Holland,**

*Treasury PRA Clearance Officer.*

[FR Doc. 05–6091 Filed 3–28–05; 8:45 am]

**BILLING CODE 4810–02–P**

## DEPARTMENT OF THE TREASURY

### Public Meeting of the President's Advisory Panel on Federal Tax Reform

**AGENCY:** Department of the Treasury.

**ACTION:** Notice of meeting.

**SUMMARY:** This notice advises all interested persons of a public meeting of the President's Advisory Panel on Federal Tax Reform.

**DATES:** This meeting will be held on Tuesday, April 12, 2005. The meeting will be held via teleconference and will begin at 2 p.m. eastern daylight time. Interested parties will be able to listen to the meeting. Call-in information will be posted on the Panel's Web site, *http://www.taxreformpanel.gov,* at a later date. Call in lines will be available on a first call first served basis.

**FOR FURTHER INFORMATION CONTACT:** The Panel staff at (202) 927–2TAX (927–2829) (not a toll-free call) or e-mail *info@taxreformpanel.gov* (please do not send comments to this box). Additional information is available at *http://www.taxreformpanel.gov.* For persons with disabilities, please contact the Panel Staff if reasonable accommodation is needed.

**SUPPLEMENTARY INFORMATION:**

*Purpose:* This meeting is the seventh meeting of the Advisory Panel. The Panel will discuss issues presented during its first six meetings.

*Comments:* Interested parties are invited to call into the teleconference to listen to the meeting; however, no public comments will be heard at the meeting. Any written comments with respect to this meeting may be mailed to The President's Advisory Panel on Federal Tax Reform, 1440 New York Avenue, NW., Suite 2100, Washington, DC 20220. All written comments will be made available to the public.

*Records:* Records are being kept of Advisory Panel proceedings and will be available at the Internal Revenue Service's FOIA Reading Room at 1111 Constitution Avenue, NW., Room 1621, Washington, DC 20024. The Reading Room is open to the public from 9 a.m.

to 4 p.m., Monday through Friday except holidays. The public entrance to the reading room is on Pennsylvania Avenue between 10th and 12th streets. The phone number is (202) 622–5164 (not a toll-free number). Advisory Panel documents, including meeting announcements, agendas, and minutes, will also be available on *http://www.taxreformpanel.gov.*

Dated: March 24, 2005.

**Mark S. Kaizen,**

*Designated Federal Officer.*

[FR Doc. 05–6164 Filed 3–28–05; 8:45 am]

BILLING CODE 4810–25–P

Federal Register

Tuesday,
March 29, 2005

# Part II

# Environmental Protection Agency

## 40 CFR Part 63

## Revision of December 2000 Regulatory Finding on the Emissions of Hazardous Air Pollutants From Electric Utility Steam Generating Units and the Removal of Coal- and Oil-Fired Electric Utility Steam Generating Units From the Section 112(c) List; Final Rule

**ENVIRONMENTAL PROTECTION AGENCY**

**40 CFR Part 63**

**[OAR–2002–0056; FRL–7887–7]**

**RIN 2060–AM96**

# Revision of December 2000 Regulatory Finding on the Emissions of Hazardous Air Pollutants From Electric Utility Steam Generating Units and the Removal of Coal- and Oil-Fired Electric Utility Steam Generating Units From the Section 112(c) List

**AGENCY:** Environmental Protection Agency (EPA).

**ACTION:** Final rule.

**SUMMARY:** The EPA is revising the regulatory finding that it issued in December 2000 pursuant to section 112(n)(1)(A) of the Clean Air Act (CAA), and based on that revision, removing coal- and oil-fired electric utility steam generating units (''coal- and oil-fired Utility Units'') from the CAA section 112(c) source category list. Section 112(n)(1)(A) of the CAA is the threshold statutory provision underlying today's action. That provision requires EPA to conduct a study to examine the hazards to public health that are reasonably anticipated to occur as the result of hazardous air pollutant (HAP) emissions from Utility Units after imposition of the requirements of the CAA. The provision also provides that EPA shall regulate Utility Units under section 112, but only if the Administrator determines that such regulation is both ''appropriate'' and ''necessary'' considering, among other things, the results of the study. EPA completed the study in 1998 (the Utility Study), and in December 2000 found that it was ''appropriate and necessary'' to regulate coal- and oil-fired Utility Units under CAA section 112. That December 2000 finding focused primarily on mercury (Hg) emissions from coal-fired Utility Units. In light of the finding, EPA in December 2000 announced its decision to list coal- and oil-fired Utility Units on the section 112(c) list of regulated source categories. In January 2004, EPA proposed revising the December 2000 appropriate and necessary finding and, based on that revision, removing coal- and oil-fired Utility Units from the section 112(c) list.

By this action, we are revising the December 2000 appropriate and necessary finding and concluding that it is neither appropriate nor necessary to regulate coal- and oil-fired Utility Units under section 112. We are taking this action because we now believe that the December 2000 finding lacked foundation and because recent information demonstrates that it is not appropriate or necessary to regulate coal- and oil-fired Utility Units under section 112. Based solely on the revised finding, we are removing coal- and oil-fired Utility Units from the section 112(c) list. The reasons supporting this action are described in detail below. Other actions related to this final rule include the recent promulgation of the final Clean Air Interstate Rule (CAIR) and the final Clean Air Mercury Rule (CAMR).

**DATES:** *Effective Date:* The effective date of the final rule is March 29, 2005.

**ADDRESSES:** EPA has established a docket for this action under Docket ID No. OAR–2002–0056. All documents in the docket are listed in the EDOCKET index at *http://www.epa.gov/edocket*. Although listed in the index, some information is not publicly available, *i.e.*, Confidential Business Information (CBI) or other information whose disclosure is restricted by statute. Certain other material, such as copyrighted material, is not placed on the Internet and will be publicly available only in hard copy form. Publicly available docket materials are available either electronically in EDOCKET or in hard copy at the EPA Docket Center (EPA/DC), EPA West Building, Room B102, 1301 Constitution Ave., NW., Washington, DC. The Public Reading Room is open from 8:30 a.m. to 4:30 p.m., Monday through Friday, excluding legal holidays. The telephone number for the Public Reading Room is (202) 566–1744, and the telephone number for the EPA Docket Center is (202) 566–1742.

**FOR FURTHER INFORMATION CONTACT:** Ms. Wendy Blake, OGC Attorney, Office of General Counsel, Environmental Protection Agency, (AR–2344), Washington, DC 20460 telephone number: (202) 564–1821; fax number: (202) 564–5603; e-mail address: *blake.wendy@epa.gov.*

*Judicial Review.* Pursuant to CAA section 307(b), judicial review of this final rule is available only by filing a petition for review in the United States Court of Appeals for the District of Columbia Circuit by May 31, 2005. EPA designates this action a CAA section 307(d) rulemaking. (See CAA section 307(d)(1)(V); 69 FR 4653 (January 30, 2004).) Under CAA section 307(d)(7)(B), only an objection to the rule that was raised with reasonable specificity during the time period for public comment can be raised during judicial review. Section 307(d)(7)(B) further provides that if the person raising the objection can demonstrate to the Administrator that it was impracticable to raise the objection during the public comment period or if the grounds for the objection arose after the public comment period but within the time period specified for judicial review and if the objection is of central relevance, EPA will convene a proceeding for reconsideration of the rule and provide the same procedural rights as would have been afforded had the information been available at the time the rule was proposed.

## I. Statutory Background

In the 1990 Amendments to the CAA, Congress substantially modified CAA section 112, the provision of the CAA addressing HAP. Among other things, section 112 contains a list of ''hazardous air pollutants,'' which are ''pollutants which present, or may present, * * * a threat of adverse human health effects * * * or adverse environmental effects whether through ambient concentrations, bioaccumulation, deposition, or otherwise.'' (See CAA section 112(b)(2).) In the 1990 amendments to the CAA, Congress listed 190 HAP, and authorized EPA to add or remove pollutants from the list.[1] (See CAA Section 112(b)(1)–(b)(3).)

The types of sources addressed under section 112 include: major sources, area sources, and electric utility steam generating units (Utility Units). (See CAA 112(a)(1), (a)(2), (a)(8).) A ''major source'' is any stationary source[2] or group of stationary sources at a single location and under common control that emits or has the potential to emit ten tons or more per year of any HAP or 25 tons or more per year of any combination of HAP. (See CAA 112(a)(1).) A stationary source of HAP that is not a ''major source'' is an ''area source.'' (See CAA 112(a)(2).) Finally, an electric utility steam generating unit is any ''fossil fuel fired combustion unit of more than 25 megawatts that serves a generator that produces electricity for sale.'' (See CAA 112(a)(8).)

There are two important steps under section 112: (1) Determining whether a source category meets the statutory criteria for regulation under section 112; and (2) promulgating emission standards for those source categories regulated under section 112. In terms of the first step, Congress required EPA to publish a list of categories and

[1] The current section 112(b) list includes 188 HAP.

[2] A ''stationary source'' of hazardous air pollutants is any building, structure, facility or installation that emits or may emit any air pollutant. (See CAA Section 111(a)(3) and 112(a)(3).)

subcategories of major sources and area sources by November 15, 1991.[3] (See CAA 112(c)(1) & (c)(3).) Congress further directed EPA to revise this initial list periodically, based on, for example, new information. (See 112(c)(1).) EPA is required to list a category of major sources under section 112(c)(1) if at least one stationary source in the category meets the definition of a major source—*i.e.*, if a certain amount of a HAP (or combination of HAP) is emitted from the source. (See 112(a)(1).) By contrast, EPA is required to list categories or subcategories of area sources only if they meet one of the following statutory criteria: (1) EPA determines that the category of area sources presents a threat of adverse effects to human health or the environment that warrants regulation under CAA section 112; or (2) the category of area sources falls within the purview of CAA section 112(k)(3)(B) (the Urban Area Source Strategy). (See CAA 112(c)(3).)

For those source categories regulated under section 112, the next step concerns the establishment of emission standards. Under section 112(d), EPA must establish emission standards that ''require the maximum degree of reduction in emissions of the hazardous air pollutants subject to this section'' that the Administrator determines is achievable based on technology, taking into account certain factors such as cost, energy requirements, and other impacts. The emission standard for new sources cannot be, however, less stringent than the level of control achieved by the best controlled similar source, and the emission standard for existing sources cannot be less stringent than the average emission limitation achieved by the best performing 12 percent of existing sources in the category, regardless of cost, energy requirements and other impacts. CAA 112(d)(2) and (3). Finally, within eight years after promulgation of section 112(d) emission standards for a listed source category, EPA must promulgate additional standards if such standards are necessary to provide an ample margin of safety to protect public health or to prevent an adverse environmental effect. (See CAA section 112(f).) These additional standards under CAA section 112(f) are commonly referred to as ''residual risk'' standards.

The criteria for listing major and area sources established in section 112(c)(1) and (c)(3) do not apply to Utility Units because Congress treated Utility Units differently from other major and area sources. Indeed, Congress enacted a special provision for Utility Units in section 112(n)(1)(A), which governs whether Utility Units should even be regulated under section 112.[4] Section 112(n)(1)(A) directs EPA to conduct a study to evaluate what ''hazards to public health [are] reasonably anticipated to occur'' as the result of HAP emissions from Utility Units ''after imposition of the requirements of th[e] Act,'' (emphasis added) and to report the results of such study to Congress by November 15, 1993. Congress also directed EPA to describe in the report to Congress ''alternative control strategies for [those] emissions that may warrant regulation under this section.'' (See CAA section 112(n)(1)(A).) Section 112(n)(1)(A) further provides that EPA shall regulate Utility Units under section 112 if the Administrator determines, considering the results of the study, that such regulation is ''appropriate and necessary.'' Thus, unlike other major and area sources, Congress first required EPA to examine how ''imposition of the requirements of th[e] Act'' would affect the overall level of utility HAP emissions, and then determine whether regulation of Utility Units under section 112 is both appropriate and necessary. Section 112(n)(1)(A) therefore sets an important and unique condition precedent for regulating Utility Units under section 112 and provides EPA discretion in determining whether that condition precedent has been met.

## II. Regulatory Background

### *A. EPA's December 20, 2000 Regulatory Finding*

On December 20, 2000, EPA issued a finding pursuant to CAA section 112(n)(1)(A) that it was appropriate and necessary to regulate coal- and oil-fired Utility Units under section 112. In making that finding, EPA considered the Utility Study, which was completed and submitted to Congress in February 1998.

In the Utility Study, we divided Utility Units into three subcategories based on fuel type: coal-, oil-, and gas-fired units. We then analyzed HAP emissions from each subcategory. We followed this approach because each subcategory burns a different fuel, which, in turn, leads to different emissions profiles, which can require different emission controls. This approach is also consistent with EPA's historical practice of subcategorizing Utility Units based on fuel type. (*See, e.g.,* 40 CFR 60.44(a).)

Because EPA subcategorized Utility Units for purposes of the Utility Study, EPA, in December 2000, made separate ''appropriate and necessary'' findings under section 112(n)(1)(A) for gas-fired, coal-fired, and oil-fired Utility Units. In making these findings, EPA considered the Utility Study and certain additional information obtained after completion of the Utility Study, including the National Academy of Sciences' report concerning the health effects of methylmercury and actual emissions data obtained in response to an information collection request EPA issued to all coal-fired Utility Units in 1999. *See* 65 FR 79826. EPA reasonably relied on this additional information because the information provided a more comprehensive and contemporaneous record concerning Hg emissions from coal-fired units. Nothing in section 112(n)(1)(A) suggests that Congress sought to preclude EPA from considering more current information in making the appropriate and necessary finding.

In the December 2000 finding, EPA determined that it was appropriate and necessary to regulate coal- and oil-fired units, but not gas-fired units.[5] With respect to the latter, EPA found that regulation of HAP emissions from natural gas-fired Utility Units ''is not appropriate or necessary because the *impacts due to HAP emissions from such units are negligible based on the results of the study documented in the utility RTC.*'' (Emphasis added) *See* 65 FR 79831.

EPA provided three primary reasons in support of its finding that it was ''appropriate'' to regulate coal- and oil-fired Utility Units under section 112. First, EPA found that it was appropriate to regulate HAP emissions from coal- and oil-fired Utility Units because Utility Units ''are the largest domestic source of Hg emissions.'' *See* 65 FR 79830. EPA next found that it was

[3] EPA published the initial list on July 16, 1992. See 57 FR 31,576, July 16, 1992. EPA did not include Utility Units on the initial section 112(c) list because Congress required EPA to conduct and consider the results of the study required by section 112(n)(1)(A) before regulating these units and, therefore, listing in 1992 was not authorized by statute.

[4] No one would dispute that certain Utility Units would meet the definition of a ''major source'' based on the quantity of HAP emitted from such units, or that other Utility Units may meet the ''area source'' criteria for listing under section 112(c)(3), but Congress recognized this fact in 1990 and specifically enacted section 112(n)(1)(A), which establishes an entirely different test for determining whether Utility Units should be regulated under section 112.

[5] Although the December 2000 finding addressed three subcategories of Utility Units—coal-, oil-, and gas-fired units, the majority of the finding concerned Hg emissions from coal-fired power plants. 65 FR 79826–29 (explaining that Hg from coal-fired units is the HAP of greatest concern); Utility Study, ES–27 (''mercury from coal-fired utilities is the HAP of greatest potential concern.'').

appropriate to regulate coal- and oil-fired Utility Units because ''mercury in the environment presents significant hazards to public health and the environment.''[6] *See* 65 FR 79830. Finally, EPA explained that it was appropriate to regulate HAP emissions from coal- and oil-fired units because it had identified certain control options that, it anticipated, would effectively reduce HAP from such units. In discussing the appropriate finding, EPA also noted that uncertainties remained concerning the extent of the public health impact from HAP emissions from oil-fired units. Thus, EPA's determination that it was ''appropriate'' to regulate coal- and oil-fired units under section 112 hinged on the health effects associated with Hg emissions from coal-fired Utility Units, the uncertainties associated with the health effects of HAP from oil-fired Utility Units, and EPA's belief that control options would be available to reduce certain utility HAP emissions.[7]

Once EPA determined that it was ''appropriate'' to regulate coal- and oil-fired Utility Units under section 112 of the CAA, EPA next concluded that it was also ''necessary'' to regulate HAP emissions from such units under section 112. Interpreting the term ''necessary'' in section 112(n)(1)(A), EPA found that it was necessary to regulate HAP from coal- and oil-fired Utility Units ''because the implementation of other requirements under the CAA will not adequately address the serious public health and environmental hazards arising from such emissions identified in the Utility RTC.'' *See* 65 FR 79830.

In light of the positive appropriate and necessary determination, EPA in December 2000 listed coal- and oil-fired Utility Units on the section 112(c) source category list. *See* 65 FR 79831 (our finding that it is appropriate and necessary to regulate coal- and oil-fired Utility Units under section 112 ''adds these units to the list of source categories under section 112(c).''). Relying on CAA section 112(e)(4), EPA explained in its December 2000 finding that neither the appropriate and necessary finding under section 112(n)(1)(A), nor the associated listing were subject to judicial review at that time. EPA did not add natural-gas fired units to the section 112(c) list in December 2000 because it did not make a positive appropriate and necessary finding for such units.

### *B. Litigation Challenging December 2000 Regulatory Finding*

Shortly after issuance of the December 2000 Finding, an industry group challenged the December 2000 finding in the United States Court of Appeals for the District of Columbia Circuit (DC Circuit). *UARG* v. *EPA,* 2001 WL 936363, No. 01–1074 (DC Cir. July 26, 2001). EPA moved to dismiss the lawsuit on the basis of section 112(e)(4), which provides, in pertinent part, that ''no action of the Administrator * * * listing a source category or subcategory under subsection (c) of this section *shall be a final agency action subject to judicial review,* except that any such action may be reviewed under such section 7607 of this title when the Administrator issues emission standards for such pollutant or category.'' (Emphasis added.) (*See* CAA Section 112(e)(4).)

In its motion to dismiss the petition, EPA argued to the DC Circuit, among other things, that the December 2000 listing of coal- and oil-fired Utility Units was inseparable from the appropriate and necessary finding and that the appropriate and necessary finding and listing actions are not final agency actions pursuant to section 112(e)(4). *See also* 65 FR 79826. EPA further noted in its motion to dismiss that both the finding and the listing would be subject to additional notice and comment as part of the section 112(d) rulemaking. *See* EPA's Motion to Dismiss, *UARG* v. *EPA*, 2001 WL 936363, No. 01–1074S (''Because the decision to add coal and oil fired electric utility steam generating units to the source category list is not yet final agency action, it will be among the matters subject to further comment in the subsequent [standards] rulemaking.''); 65 FR 79831 (noting that issues related to the listing, such as ''the exact dimension of the source category,'' will be subject to additional comment in the emission standard rulemaking process). The DC Circuit dismissed the challenge to the December 2000 finding for lack of jurisdiction based on section 112(e)(4) of the CAA. The December 2000 finding and associated listing are therefore not final agency actions.

### *C. January 30, 2004 Proposed Rule and March 2004 Supplemental Notice*

On January 30, 2004, EPA published in the **Federal Register** a proposed rule entitled ''Proposed National Emissions Standards for Hazardous Air Pollutants; and, in the Alternative, Proposed Standards of Performance for New and Existing Stationary Sources: Electric Utility Steam Generating Units.'' (*See* 69 FR 4652 (January 30, 2004).) In that rule, EPA proposed three alternative regulatory approaches. First, EPA proposed to retain the December 2000 Finding and associated listing of coal- and oil-fired Utility Units and to issue under section 112(d) maximum achievable control technology-based (MACT) emission standards for both subcategories. Second, EPA alternatively proposed revising the Agency's December 2000 Finding, removing coal and oil-fired Utility Units from the section 112(c) list,[8] and issuing final standards of performance under CAA section 111 for new and existing coal-fired units that emit Hg and new and existing oil-fired units that emit nickel. Finally, as a third alternative, EPA proposed retaining the December 2000 finding, removing coal and oil-fired Utility Units from the section 112(c) list, and regulating Hg emissions from Utility Units under CAA section 112(n)(1)(A).

Shortly thereafter, on March 16, 2004, EPA published in the **Federal Register** a supplemental notice of proposed rulemaking entitled ''Supplemental Notice of Proposed National Emission Standards for Hazardous Air Pollutants; and, in the Alternative, Proposed Standards of Performance for New and Existing Stationary Sources: Electric Utility Steam Generating Units.'' *See* 69 FR 13298 (March 16, 2004). In that

[6] Section IV below addresses our conclusion that it is not appropriate and necessary to regulate coal- and oil-fired Utility Units under section 112 and explains why we now believe that our December 2000 finding lacked foundation. As explained below, one of the reasons the December 2000 ''appropriate'' finding for oil-fired Utility Units lacks foundation is because the record that was before the Agency in December 2000 establishes that Hg is a HAP of concern only as emitted from coal-fired units, not oil-fired units. Utility Study ES–5,13,27. EPA therefore should not have relied upon Hg emissions as a basis for finding it was appropriate to regulate oil-fired units under section 112. (*See, e.g.,* Utility Study ES–5, ES–27.)

[7] The ''appropriate'' finding for oil-fired units stemmed primarily from EPA's concerns over the potential health effects of nickel from such units. As explained in the January 2004 proposed rule, the record before the Agency in December 2000 supported a distinction between nickel and the other HAP emitted from oil-fired units. *See* 69 FR 4688. We proposed that this distinction was reasonable based on the relative amount of nickel emitted from oil-fired units and the health effects associated with such emissions. (See also Utility Study at ES–12 (noting higher population concentrations surrounding oil-fired units). At the time of the proposed rule, we recognized, however, the uncertainties in the data underlying our ''appropriate'' finding for oil-fired units based on nickel emissions, and for that reason solicited information as to whether nickel emissions from oil-fired plants currently pose a hazard to public health.

[8] We did not propose revising the December 2000 finding for gas-fired Utility Units because EPA continues to believe that regulation of such units under section 112 is not appropriate and necessary. We have not received any information that would cause us to change our conclusion in this regard. In fact, the information that we have received since the Utility Study only confirms the conclusion we reached in December 2000. We therefore take no action today with regard to the December 2000 finding for gas-fired Utility Units.

notice, EPA proposed certain additional regulatory text, which largely governed the proposed section 111 standards of performance for Hg, which included a cap-and-trade program. The supplemental notice also proposed state plan approvability criteria and a model cap-and-trade rule for Hg emissions from coal-fired Utility Units. The Agency received thousands of comments on the proposed rule and supplemental notice.[9] Comments relating to the central issues concerning today's action are addressed in this preamble. The remainder of our responses are contained in the response to comments document which is in the docket.[10]

*D. The December 2004 Notice of Data Availability*

On December 1, 2004, EPA published in the **Federal Register** a notice of data availability entitled ''Proposed National Emission Standards for Hazardous Air Pollutants; and, in the Alternative, Proposed Standards of Performance for New and Existing Stationary Sources, Electric Utility Steam Generating Units: Notice of Data Availability.'' *See* 69 FR 69864 (December 1, 2004). EPA issued this notice to seek additional information and input concerning: (1) Certain Hg data and information that the Agency received in response to the proposed rule and supplemental notice, (2) the different forms of Hg that are emitted into the atmosphere from coal-fired Utility Units and how those forms respond to different control technologies; and (3) a revised proposed benefits methodology for assessing the benefits of Hg regulation. The benefits methodology generally involves analyzing Hg emissions from coal-fired Utility Units, conducting deposition modeling based on the identified Hg emissions, and relating that deposition modeling to methylmercury concentrations in fish. EPA conducts benefits analyses for rulemakings consistent with the provisions of Executive Order 12866.

[9] We initially estimated that we had over 680,000 submissions from the public on the proposed rule and the supplemental notice, which came primarily in the form of letters and e-mails. A recent review of the electronic docket reveals that our initial estimate was over-stated. The docket reflects approximately 500,000 separate submissions from the public, about 5,000 of which represent unique comments.

[10] The response to comments document relevant to this rule is called: ''Response to Significant Public Comments Concerning the Proposed Revision of the December 2000 Appropriate and Necessary Finding and Proposed Removal of Utility Units From the Section 112(c) List.''

**III. EPA's Interpretation of CAA Section 112(n)(1)(A)**

As explained above, Congress treated Utility Units differently from other major and area sources and provided EPA considerable discretion in evaluating whether to regulate Utility Units under section 112. Section 112(n)(1)(A) provides, in full:

> The Administrator shall perform a study of the *hazards to public health reasonably anticipated to occur as a result of emissions by electric utility steam generating units* of pollutants listed under subsection (b) of this section after imposition of the requirements of this Act. The Administrator shall report the results of this study to the Congress within 3 years after the date of the enactment of the Clean Air Act Amendments of 1990. The Administrator shall develop and describe in the Administrator's report to Congress alternative control strategies for emissions which may warrant regulation under this section. The Administrator shall regulate electric utility steam generating units under this section, if the Administrator finds such regulation is *appropriate and necessary after considering the results* of the study required by this subparagraph.

(Emphasis added.).

The italicized terms in the above paragraph are central terms in section 112(n)(1)(A). Before we address our interpretation of these terms, however, we again summarize the requirements of section 112(n)(1)(A). The first step under section 112(n)(1)(A), which is addressed by the first three sentences of section 112(n)(1)(A), concerns the completion of a study and submission of the results of that study to Congress by November 15, 1993. The study is to examine the hazards to public health from utility HAP emissions that are reasonably anticipated to occur following imposition of the requirements of the CAA and to identify alternative control strategies for those HAP that may warrant regulation under section 112. The second step, which is addressed by the last sentence of section 112(n)(1)(A), requires EPA to determine whether regulation of Utility Units under section 112 is appropriate and necessary considering, among other things, the results of the study. Congress provided no deadline by which this determination must be made.

Section 112(n)(1)(A) itself contains no clear standard to govern EPA's analysis and determination of whether it is ''appropriate and necessary'' to regulate utilities under section 112. The first sentence of the subparagraph describes the scope of the study EPA was to conduct. The sentence on EPA's ''appropriate and necessary'' finding then says that the Agency must make that finding after considering the results of the study. But Congress did not supply an actual definition or test for determining whether regulation of utilities under section 112 is ''appropriate and necessary.'' Thus, EPA must supply a reasonable interpretation of those terms to fill the gap. *Chevron USA Inc.* v. *NRDC*, 467 U.S. 837 (1984).

Congress' direction on the study provides the only guidance in section 112(n)(1)(A) about the substance of EPA's inquiry. Because the statute provides no other explicit guidance, EPA has chosen to extrapolate from Congress' description of the study to adopt a reasonable interpretation of the phrase ''appropriate and necessary.'' The following sections describe how the Agency has used Congress' guidance on the study to formulate different aspects of our interpretation and application of the ''appropriate and necessary'' test.

*A. Hazards to Public Health Reasonably Anticipated To Occur*

In section 112(n)(1)(A), Congress directed EPA to perform a study of ''hazards to public health'' that would likely result from utility HAP emissions, before making any further decisions about regulating utilities under section 112. Unlike other sections of the CAA, section 112(n)(1)(A) focuses only on hazards to public health. It does not require that EPA study other factors, such as environmental effects without any established pathways to human health effects. In contrast, section 112(n)(1)(B) requires a separate EPA study, although not as a precursor to a regulatory determination, of the ''health and environmental effects'' of ''mercury emissions'' from a broad range of sources. Also unlike Section 112(n)(1)(A), many of the other requirements of section 112 explicitly require both an assessment of human health effects and, in addition, an assessment of adverse environmental effects. For example, the Administrator is charged with periodically reviewing the list of Hazardous Air Pollutants and adding pollutants that present a threat of either ''adverse human health effects'' or ''adverse environmental effects.'' CAA Section 112(b)(2). The Administrator examines area sources of HAPs to determine if they present ''a threat of adverse effects to human health or the environment.'' CAA Section 112(c)(3). The Administrator is to prioritize action under section 112(d) after considering ''the known or anticipated adverse effects of such pollutants on public health and environment.'' CAA Section 112(e)(2)(A). Nor did Congress appear to view the two terms as synonymous. Under section 112(f), the EPA

promulgates emission standards at a level ''with an ample margin of safety'' to ''protect public health.'' CAA Section 112(f)(2)(A). The Administrator may go further and impose more stringent standards to protect against ''an adverse environmental effect'' only after considering ''cost, energy, safety, and other relevant factors.'' *Id.*

As described above, section 112(n)(1)(A) also provides no clear standard for analyzing public health effects—in contrast to, for example, section 112(f). Under section 112(f), the issue is whether additional regulation is needed to ''provide an ample margin of safety to protect public health.'' Section 112(f) also expressly incorporates EPA's pre-1990 two-part inquiry for evaluating what level of emission reduction is needed to provide an ample margin of safety to protect public health. See CAA section 112(f)(2)(B) (incorporating EPA's two-part ample margin of safety inquiry, set forth at 54 FR 38044 September 14, 1989, which implemented the requirements of section 112 of the 1977 CAA).[11] By contrast, section 112(n)(1)(A) neither includes the ''ample margin of safety to protect public health'' requirement, nor does it incorporate EPA's pre-1990 ample margin of safety inquiry.

Because of the focus on ''public health'' in the section 112(n)(1)(A) study requirement, and because as discussed above Congress did not define the scope of the ''appropriate and necessary'' finding, EPA is reasonably interpreting section 112(n)(1)(A) to base that finding on an assessment of whether utility HAP emissions likely would result in ''hazards to public health.''

Moreover, EPA reasonably interprets section 112(n)(1)(A) not to require the Agency either to study or to base its ''appropriate and necessary'' finding on an assessment of environmental effects unrelated to public health.

As described above, Section 112(n)(1)(A) requires only that the Administrator ''consider'' the results of the public health study before determining whether utility regulation is ''appropriate and necessary.'' This mild direction, when paired with the considerable discretion inherent in any judgment about whether an action is ''appropriate and necessary,'' has led EPA to conclude that the statute permits the agency to consider other relevant factors when determining whether to regulate emissions from utility units under section 112. This is not to say, however, that EPA believes it may ignore the context of section 112(n) in making its determination.

The Supreme Court has recognized that ''where Congress includes particular language in one section of a statute but omits it in another section of the same Act,'' as here, where section 112(n)(1)(A) refers to public health and conspicuously omits any reference to adverse environmental effect, ''it is generally presumed that Congress acts intentionally * * * in the disparate inclusion or exclusion.'' *Russello* v. *United States,* 464 U.S. 16, 23 (1983). The only direction that Congress explicitly provided to guide our ''appropriate and necessary'' finding was that we consider the results of a study of only those ''hazards to public health'' that the agency ''reasonably anticipate[s] to occur.''

EPA must reconcile the broad discretion to determine what is ''appropriate and necessary'' with the implicit Congressional decision that information about environmental effects unrelated to human health effects was not needed for that determination. Rather than conclude that EPA is prohibited from considering environmental effects, however, EPA interprets section 112(n)(1)(A) to permit the agency to consider other relevant factors as part of its ''appropriate and necessary'' determination, as refined further below, but these factors may not independently, or in conjunction with one another, justify regulation under section 112(n) when EPA has concluded that hazards to U.S. public health are not reasonably anticipated to occur. Compare CAA section 112(f)(2)(A) (Administrator may set a more stringent standard than is required to protect health if necessary, considering factors such as cost, to prevent an adverse environmental effect).

In evaluating hazards to public health under section 112(n)(1)(A) we look at various factors, including, for example, the affected population, the characteristics of exposure (*e.g.,* level and duration), the nature of the data, including the uncertainties associated with the data, and the nature and degree of health effects. In terms of assessing health effects, we have numerous tools at our disposal. See Section VI.H (for fuller discussion of factors relevant to assessing the hazards to public health). For example, for cancer effects, we can assess the lifetime excess cancer risk, and for other effects, we look to tools, such as the reference dose.[12] As explained below, the ''hazards to public health reasonably anticipated to occur'' standard is relevant not only for the Study, but also for the appropriate and necessary determination.

EPA has also taken note of the context for assessing ''hazards to public health,'' for the language of section 112(n)(1)(A), calls for an analysis of the ''hazards to public health'' reasonably anticipated to ''occur as a result of emissions by electric utility steam generating units.'' (Emphasis added.) Section 110(a)(2)(D) provides an instructive comparison in this regard. In section 110(a)(2)(D), Congress required that each state implementation plan contain adequate provisions ''prohibiting * * * any source or other type of emissions activity within the State from emitting any air pollutant in amounts'' that will ''contribute significantly to nonattainment'' of the national ambient air quality standards. This provision demonstrates that Congress knew how to require regulation of emissions of air pollutants even where the pollutants themselves do not cause a problem, but rather only ''contribute to a problem.'' Unlike section 110(a)(2)(D), in section 112(n)(1)(A), Congress focused exclusively on the ''hazards to public health'' of HAP emissions ''result[ing] from'' Utility Units. Rather, it is the EPA study performed pursuant to section 112(n)(1)(B), not the inquiry under section 112(n)(1)(A), that examines all current anthopogenic sources of Hg emissions and their effects on human health and the environment. EPA has concluded that its inquiry under section 112(n)(1)(A) may reasonably focus solely on whether the utility HAP emissions themselves are posing a hazard to public health. This focus on utility emissions only is consistent with Congress' overall decision to provide for separate treatment of utilities in section 112(n)(1)(A).

### *B. Imposition of the Requirements of This Act*

Congress required EPA to examine the hazards to public health from utility emissions ''after imposition of the requirements of this Act.'' The phrase ''imposition of the requirements of th[e] Act'' is susceptible to different

[11] Section 112 of the 1977 CAA directed EPA to promulgate emission standards ''at the level which in * * * [the Administrator's judgment] provides an ample margin of safety to protect the public health.'' Congress substantially amended section 112 in 1990 and enacted several new provisions. Congress specifically incorporated the ''ample margin of safety to protect public health'' requirement into section 112(f), which applies to any source category that is regulated under section 112(d)(2) and (d)(3). Significantly, Congress did not include the ''ample margin of safety'' language in section 112(n)(1)(A). Instead, Congress directed EPA to assess the ''hazards to public health reasonably anticipated to occur'' from utility HAP emissions after imposition of the requirements of the CAA, and then determine whether Utility unit emissions should be regulated under section 112 of the CAA.

[12] Section VI below discusses the reference dose (''RfD'') in detail.

interpretations because Congress did not specify the scope of the requirements under the CAA to be considered or, more importantly, the time period over which the imposition of requirements was to be examined. EPA reasonably interprets the phrase ''imposition of the requirements of th[e] Act'' to include not only those requirements already imposed and in effect, but also those requirements that EPA reasonably anticipates will be implemented and will result in reductions of utility HAP emissions. This interpretation is reasonable in view of the fact that Congress called for the study to be completed within three years of enactment of the 1990 CAA Amendments. At such time, EPA could have only forecast, to the extent possible, how implementation of the requirements of the CAA would impact utility HAP emissions, based on the science and the state of technology at the time.[13]

We are interpreting the phrase ''requirements of th[e] Act'' broadly to include CAA requirements that could either directly or indirectly result in reductions of utility HAP emissions. For example, certain provisions of the CAA that affect Utility Units, such as the requirements of Title I and Title IV, require controls on pollutants like $SO_2$ or $NO_X$. Although these pollutants are not HAP, the controls that are required to achieve the needed reductions have the added effect of reducing HAP emissions. Thus, given our interpretation of the phrase ''imposition of the requirements of th[e] Act,'' we read the first sentence of section 112(n)(1)(A) as calling for a study of the hazards to public health from utility HAP emissions that EPA reasonably anticipates would occur after implementation of the CAA requirements that EPA, at the time of the study, should have reasonably anticipated would be implemented and would directly or indirectly result in reductions of utility HAP emissions.

Finally, it is telling that Congress directed EPA to examine the utility HAP emissions remaining ''after imposition of the requirements of th[e] Act,'' because there is no other provision in section 112 that calls for EPA to examine the requirements of the CAA in assessing whether to regulate a source category under section 112.[14] Congress plainly treated Utility Units differently from other source categories, and that special treatment reveals Congress' recognition that Utility Units are a broad, diverse source category that is subject to numerous CAA requirements, including requirements under both Title I and Title IV, and that such sources should not be subject to duplicative or otherwise inefficient regulation.[15] See 136 Cong. Rec. H12911, 12934 (daily ed. Oct. 26, 1990) (Statement of Congressman Oxley) (stating that the conferees adopted section 112(n)(1)(A) ''because of the logic of basing any decision to regulate on the results of scientific study and because of the emission reductions that will be achieved and the extremely high costs that electric utilities will face under other provisions of the new Clean Air Act amendments.'').

### *C. Appropriate and Necessary After Considering the Results of the Study*

Section 112(n)(1)(A) requires EPA to make a determination as to whether regulation of Utility Units under section 112 is ''appropriate and necessary.'' Congress did not define the terms ''appropriate'' and ''necessary,'' but provided that regulation of Utility Units under section 112 could occur only if EPA determines that such regulation is both ''appropriate'' and ''necessary.''

#### 1. Considering the Results of the Study

The appropriate and necessary determination is to be made only after ''considering the results of the study'' required under section 112(n)(1)(A). We interpret the phrase ''considering the results of the study'' to mean that EPA must consider the results of the study in making its determination, but that EPA is not foreclosed from analyzing other relevant information that becomes available after completion of the study. This interpretation is reasonable because section 112(n)(1)(A) contains no deadline by which EPA must determine whether it is ''appropriate and necessary'' to regulate Utility Units under section 112.

Moreover, nothing in section 112(n)(1)(A) suggests that EPA is precluded from considering new relevant information obtained after completion of the Utility Study in determining whether regulation of Utility Units under section 112 is appropriate and necessary. Indeed, the term ''considering'' in section 112(n)(1)(A) is analogous to the terms ''based on'' or ''including,'' which are neither limiting nor exclusive terms.[16] In a recent case, the DC Circuit rejected an argument advanced by the petitioners that an EPA rule was invalid because the statute required EPA to promulgate the regulation ''based on the study,'' and according to petitioners EPA's rule was not based on a study that met the requirements of the CAA. *Sierra Club* v. *EPA*, 325 F.3d 374 (DC Cir. 2003). In rejecting petitioners' arguments, the Court held, among other things, that ''the statute doesn't say that the rule must be based exclusively on the study.'' *Sierra Club* v. *EPA*, 325 F.3d at 377 (emphasis in original); See also *United States* v. *United Technologies Corp.*, 985 F.2d 1148, 1158 (2d Cir. 1993) (''based upon'' does not mean ''solely''); *McDaniel* v. *Chevron Corp.*, 203 F.3d 1099, 1111 (9th Cir. 2000). Consistent with this reasoning, EPA reasonably interprets the phrase ''considering the results of the study,'' to mean that EPA must consider the study, but that it can consider other relevant information obtained after completion of the study. Congress could not have reasonably intended for EPA to

[13] Although the December 2000 finding does not provide an interpretation of the phrase ''after imposition of the requirements of the[e] Act,'' the Utility Study, on which that finding was based, does account for the phrase by evaluating utility HAP emission levels in 2010. See Utility Study ES–2 (the ''2010 scenario was selected to meet the section 112(n)(1)(A) mandate to evaluate hazards 'after imposition of the requirements of 'the CAA.''). We do not believe that the December 2000 finding or the January 2004 proposal properly give effect to all of the terms of section 112(n)(1)(A), including the first sentence of section 112(n)(1)(A). We therefore provide our interpretation of the central terms in that sentence above, as those terms are relevant to the final actions we are taking today.

[14] Section 112(m)(6) provides an instructive comparison because it requires EPA to examine the other provisions of section 112, and to determine whether those provisions are adequate to prevent serious adverse effects to public health and the environment associated with atmospheric deposition to certain waterbodies. Section 112(m)(6) also requires EPA to promulgate additional regulations setting emission standards or control requirements, ''in accordance with'' section 112 and under the authority of section 112(m)(6), if EPA determines that the other provisions of section 112 are adequate, and such regulations are appropriate and necessary to prevent serious adverse public health and environmental effects. Section 112(n)(1)(A) provides EPA far greater discretion because under that section, EPA is not only to evaluate the reasonably anticipated public health hazards remaining ''after imposition of the requirements of th[e] Act,'' but also to determine whether to regulate Utility Units under section 112 of the CAA at all.

[15] As noted elsewhere, section 112(n)(1)(A) was included in the House Committee bill and adopted by the House; while the Senate included a different provision. In the Conference Committee, the House version prevailed. Sen. Durenberger, a Senate conferee and an evident opponent of the provision, alluded to another purpose for the provision, which concerns the fact that ''mercury is a global problem.'' Legislative History of the Clean Air Act Amendments of 1990, at 872 (Oct. 27, 1990) (statement of Sen. Durenberger). Based on Sen. Durenberger's statement, it appears that one of the reasons for the wide deference Congress accorded EPA under section 112(n)(1)(A) was to allow EPA to account for the fact that Hg emissions from U.S. utilities are a very small part of overall Hg emissions, and therefore that EPA should exercise discretion in considering the uncontrollable amount of risk from Hg that would remain regardless of the extent to which U.S. utilities are controlled.

[16] In fact, the term ''considering,'' on its face, is less limiting than the phrase ''based on.''

ignore relevant information concerning HAP emissions from Utility Units solely because that information was obtained after completion of the Utility Study.[17]

2. Appropriate and Necessary

The condition precedent for regulating Utility Units under section 112 is whether such regulation is ''appropriate'' and ''necessary.'' These are two very commonly used terms in the English language, and Congress has not ascribed any particular meaning to these terms in the CAA. The legislative history does not resolve Congress' intent with regard to these terms. We therefore first examine the structure of section 112(n)(1)(A) and then discuss our interpretation of the terms ''appropriate'' and ''necessary.''

a. Examining the Structure of Section 112(n)(1)(A). In interpreting the terms ''appropriate'' and ''necessary'' in section 112(n)(1)(A), we begin with the structure of section 112(n)(1)(A). As an initial matter, the order of the terms in the phrase ''appropriate and necessary'' suggests that the first decision EPA must make is whether regulation of Utility Units under section 112 is ''appropriate.'' Even if EPA determines that regulation of Utility Units under section 112 is appropriate, it must still determine whether such regulation is also necessary. Were EPA to find, however, that regulation of Utility Units under section 112 met only one prong, then regulating Utility Units under section 112 would not be authorized by the statute.

The structure of section 112(n)(1)(A) also reveals that the appropriate and necessary finding is to be made by reference to the reasonably anticipated public health risks of utility HAP emissions that remain after ''imposition of the requirements of th[e] Act.'' The first sentence of section 112(n)(1)(A) contains an important direction to EPA, which sets the predicate for the entire provision. That first sentence calls for EPA to identify the hazards to public health reasonably anticipated to occur as a result of the utility HAP emissions remaining ''after imposition of the requirements of th[e] Act.'' Stated differently, Congress wanted EPA to identify the utility HAP emissions that would remain ''after imposition of the requirements of th[e] Act'' and identify the hazards to public health reasonably anticipated to occur as the result of such emissions. As noted above, we interpret the phrase ''imposition of the requirements of th[e] Act'' to include those CAA requirements that EPA should have reasonably anticipated would be implemented and would result in reductions of utility HAP emissions.[18] Congress' focus on the other requirements of the CAA reflects its recognition that Utility Units are subject to numerous CAA provisions and its intent to avoid duplicative and unnecessary regulation. We therefore reasonably conclude that the appropriate and necessary finding is to be made by reference to the reasonably anticipated public health risks from utility HAP emissions that remain ''after imposition of the requirements of th[e] Act.''

b. EPA's interpretations of the terms ''appropriate'' and ''necessary.'' (i) Appropriate. In December 2000, EPA found that it was appropriate to regulate coal- and oil-fired Utility Units under section 112. At that time, we did not provide an interpretation of the term ''appropriate.'' Instead, we focused on the following facts and circumstances. We first found that it was ''appropriate'' to regulate coal- and oil-fired Utility Units under section 112 because ''mercury in the environment presents significant hazards to public health.'' *See* 65 FR 79830. We also determined that it was appropriate to regulate oil-fired Utility Units based on the uncertainties ''regarding the extent of the public health impact from HAP emissions from'' such units. *See* 65 FR 79830. Finally, we found that it was appropriate to regulate HAP emissions from coal-and oil-fired units under section 112 because we had identified control options that we anticipated would effectively reduce certain HAP emissions. We also indicated that certain control options could ''greatly reduc[e] mercury control costs.'' *See* 65 FR 79830.

In January 2004, we proposed reversing our ''appropriate'' finding in large part. Specifically, we proposed that it is not ''appropriate'' to regulate coal-fired units on the basis of non-Hg HAP and oil-fired units on the basis of non-Ni HAP because the record that was before the Agency in December 2000 indicates that emissions of such pollutants do not result in hazards to public health. *See* Section IV.B.

Webster's dictionary defines the term ''appropriate'' to mean ''especially suitable or compatible.'' Miriam-Webster's Online Dictionary, 10th ed. Determining whether something is ''especially suitable or compatible'' for a particular situation requires consideration of different factors. In section 112(n)(1)(A), Congress requires EPA to determine whether it is ''appropriate'' to regulate Utility Units under section 112. In making this determination, we begin as we did in December 2000, by assessing the paramount factor, which is whether the level of utility HAP emissions remaining ''after imposition of the requirements of th[e] Act'' would result in hazards to public health. We determine whether the remaining utility HAP emissions cause hazards to public health by analyzing available health effects data and assessing, among other things, the uncertainties associated with those data, the weight of the scientific evidence, and the extent and nature of the health effects. See Section VI. If the remaining HAP emissions from Utility Units do not result in hazards to public health, EPA does not believe that it would be ''especially suitable''—*i.e.*, ''appropriate''—to regulate such units under section 112. In this situation, there would be no need to consider any additional factors under the ''appropriate'' inquiry because the threshold fact critical to making a finding that it is appropriate to regulate Utility Units under section 112 would be missing.

Even if the remaining utility HAP emissions cause hazards to public health, it still may not be appropriate to regulate Utility Units under section 112 because there may be other relevant factors particular to the situation that would lead the Agency to conclude that it is not ''especially suitable'' or ''appropriate'' to regulate Utility Units under section 112. For example, it might not be appropriate to regulate the utility HAP emissions remaining ''after imposition of the requirements of th[e] Act,'' if the controls mandated under section 112(d) would be ineffective at eliminating or reducing the identified hazards to public health. Similarly, it might not be appropriate to regulate the

[17] Consistent with this interpretation, in December 2000, EPA relied not only on the Utility Study, but also on certain information concerning Hg obtained after completion of the study, including actual emissions data from coal-fired plants for calendar year 1999 and a report from the National Academy of Sciences on the health effects of methylmercury. See 65 FR 79825–27.

[18] The comments of Rep. Oxley, a member of the Conference Committee, about section 112(n)(1)(A) support EPA's interpretation of that provision. Rep. Oxley stated:

> Pursuant to section 112(n), the Administrator may regulate fossil fuel fired electric utility steam generating units only if the studies described in section 112(n) clearly establish that emissions of any pollutant, or aggregate of pollutants, from such units cause a significant risk of serious adverse effects on the public health. Thus, if the Administrator regulates any of these units, he may regulate only those units that he determines—*after taking into account compliance with all other provisions of the CAA* and any other federal, state or local regulation and voluntary emission reductions—have been demonstrated to cause a significant threat of adverse effects on public health.

136 Cong. Rec. H12911, 12934 (daily ed. Oct. 26, 1990) (Statement of Rep. Oxley) (emphasis added).

remaining utility HAP emissions under section 112 if the health benefits expected as the result of such regulation are marginal and the cost of such regulation is significant and therefore substantially outweighs the benefits. These examples illustrate that situation-specific factors, including cost, may affect whether it ''is appropriate'' to regulate utility HAP emissions under section 112.[19] (See Section 112(n)(1)(A).)

It cannot be disputed that Congress under section 112(n)(1)(A) entrusted EPA to exercise judgment by evaluating whether regulation of Utility Units under section 112 is, in fact, ''appropriate.'' We believe that in exercising that judgment, we have the discretion to examine all relevant facts and circumstances, including any special circumstances that may lead us to determine that regulation of Utility Units under CAA section 112 is not appropriate.[20]

(ii) Necessary. Like the ''appropriate'' finding, the ''necessary'' finding must be made by reference to the utility HAP emissions remaining after imposition of the requirements of the CAA.

Specifically, we interpret the term ''necessary'' in section 112(n)(1)(A) to mean that it is necessary to regulate Utility Units under section 112 only if there are no other authorities available under the CAA that would, if implemented, effectively address the remaining HAP emissions from Utility Units. Assessing whether an alternative authority would effectively address the remaining utility HAP emissions would involve not only: (a) An analysis of whether the alternative legal authority, if implemented, would address the identified hazards to public health, which was a concept specifically addressed in December 2000 and in the January 2004 proposal, but also (b) an analysis of whether the alternative legal authority, if implemented, would result in effective regulation, including, for example, its cost-effectiveness and its administrative effectiveness. See *Michigan* v. *EPA*, 213 F.3d, 663, 678 (addressing consideration of costs).

This interpretation of the term ''necessary'' differs slightly from the interpretation advanced in December 2000 and January 2004. In December 2000 and January 2004, we interpreted the term ''necessary'' to mean that it is only necessary to regulate Utility Units under section 112 if there are no other authorities under the CAA that would adequately address utility HAP emissions. Several commenters noted that under this interpretation, EPA could never regulate HAP under section 112 if it identified an alternative viable legal authority. In light of these comments and further review of section 112(n)(1)(A), we refined our interpretation of the term ''necessary'' as noted above. We agree that if we found an alternative authority under the CAA but we also determined that such authority would not effectively address the remaining HAP emissions, we should be able to address those emissions under section 112. Accordingly, we maintain that it is necessary to regulate Utility Units under section 112 only if there are no other authorities under the CAA that, if implemented, would effectively address the remaining HAP emissions from Utility Units.

Some commenters argued that the ''appropriate and necessary'' finding is a public health threshold finding, not an investigation into whether another provision of the CAA would address HAP emissions from utilities. This argument is without merit, however, because it conflates the terms ''appropriate'' and ''necessary'' and renders one term mere surplusage. Congress required EPA to determine whether it was both appropriate and necessary to regulate Utility Units under section 112. EPA agrees that it must evaluate the hazards to public health associated with HAP from utilities in terms of assessing whether regulation under section 112 is ''appropriate.'' But Congress meant something different by the term ''necessary,'' and EPA's interpretation of that term is reasonable. Moreover, we believe that the emissions inquiry envisioned under the first sentence of section 112(n)(1)(A) is distinct from the ''necessary'' inquiry called for by the last sentence of section 112(n)(1)(A), because under the ''necessary'' inquiry the issue is not whether EPA reasonably anticipated that a particular provision of the CAA will be implemented and will reduce HAP emissions, but rather whether there are any other authorities in the CAA that could be implemented, and if implemented, could effectively address the hazards to public health that result from the remaining HAP emissions.

Other commenters argued that EPA cannot consider other statutory authorities under the ''necessary'' prong of the ''appropriate and necessary'' inquiry because those authorities do not provide for regulation of utility HAP according to the provisions of CAA section 112(d) and (f). This argument is also without merit because it again renders mere surplusage the ''necessary'' prong of the determination. Moreover, as explained above, Congress did not incorporate the requirements of section 112(f) into section 112(n)(1)(A), but instead, as we interpret section 112(n)(1)(A), called on EPA to consider the ''hazards to public health reasonably anticipated to occur'' from utility HAP emissions after imposition of the requirements of the CAA, in determining whether it is both appropriate and necessary to regulate Utility Units under section 112.

3. The Timing and Nature of the ''Appropriate and Necessary'' Determination

Congress set no deadline in section 112(n)(1)(A) by which EPA must determine whether regulation of Utility Units is appropriate and necessary. We believe that Congress provided

[19] Nothing precludes EPA from considering costs in assessing whether regulation of Utility Units under section 112 is appropriate in light of all of the facts and circumstances presented. The DC Circuit has indicated that regulatory provisions should be read with a presumption in favor of considering costs: ''It is only where there is 'clear congressional intent to preclude consideration of cost' that we find agencies barred from considering costs. [Citations omitted.]'' *Michigan* v. *EPA*, 213 F.3d 663, 678 (DC Cir. 2000), cert. den., 532 U.S. 903 (2001) (upholding EPA's interpretation of ''contribute significantly'' under CAA section 110(a)(2)(D) to include a cost component). The Supreme Court's decision in *Whitman* v. *American Trucking Assn's (ATA)*, Inc., 531 U.S. 457 (2001), is not to the contrary. In that case, the Court held that EPA lacked authority to consider costs in the context of setting the national ambient air quality standards under CAA section 109(b)(1), because the ''modest words 'adequate margin' and 'requisite'' in that section do not ''leave room'' to consider cost. 531 U.S. 466. By contrast, EPA is not setting emission standards in today's action, but rather determining, as Congress directed, whether it is ''appropriate'' and ''necessary'' to regulate Utility Units under CAA section 112. The terms ''appropriate'' and ''necessary'' are broad terms, which by contrast to the terms at issue in ATA do, in fact, leave room for consideration of costs in deciding whether to regulate utilities under section 112. Moreover, the legislative history of section 112(n) indicates that Congress intended for EPA to consider costs. See 136 Cong. Rec. H12911, 12934 (daily ed. Oct. 26, 1990) (statement of Rep. Oxley) (''[T]he conference committee produced a utility air toxics provision that will provide ample protection of the public health while avoiding the imposition of excessive and unnecessary costs on residential, industrial and commercial consumers of electricity.''). Finally, section 112(n)(1)(A) requires EPA to consider alternative control strategies, and the focus on such strategies may reasonably be read as further evidence of the relevance of costs. *See, e.g.*, 65 FR 79830 (discussing costs in relation to certain technologies).

[20] Significantly, in December 2000, we acknowledged that factors other than the hazards to public health resulting from utility HAP emissions should be examined in determining whether regulation of Utility Units is appropriate under section 112. Indeed, after concluding that the Hg emissions from coal-fired Utility Units caused hazards to public health, we proceeded with the appropriate inquiry and examined whether there were any control technologies that could effectively reduce Hg. We also commented on the costs of achieving such reductions. *See, e.g.*, 65 FR 79828, 79830.

sufficient discretion under section 112(n)(1)(A)—in terms of both the substance and the timing of the appropriate and necessary finding—that nothing precludes us from revising our appropriate and necessary finding if we determine either that the finding was in error based on information before the Agency at the time of the finding, or that the finding is incorrect given new information concerning utility HAP emissions obtained after issuance of the finding. Both of these situations are present here, as explained in section IV below.

Moreover, EPA reasonably interprets the last sentence of section 112(n)(1)(A) as authorizing EPA to issue separate appropriate and necessary findings for different subcategories of ''electric utility steam generating units.'' EPA typically subcategorizes large source categories such as utilities. This is especially true for Utility Units because the nature of the fuel used in different units (*e.g.,* coal-, oil-, or gas-fired Utility Units), affects the type and amount of HAP emitted from the units, which, in turn, affects the issue of whether hazards to public health may exist from such emissions.[21] Even where section 112(n)(1)(A) read to require EPA to make only one appropriate and necessary finding for all ''electric utility steam generating units,'' EPA's conclusions, as described below, would remain the same.

## IV. Revision of the December 2000 Appropriate and Necessary Finding

In Section II above, we summarize the December 2000 appropriate and necessary finding for coal- and oil-fired Utility Units. In this section, we explain why we now believe that the December 2000 finding lacked foundation and therefore was erroneous. We also address below certain new information obtained since the finding that confirms that it is not appropriate and necessary to regulate coal- and oil-fired Utility Units under section 112. Our discussion below is divided into two sections, the first of which concerns the December 2000 finding for coal-fired units, and the second of which addresses the December 2000 finding for oil-fired units.

### *A. Revision of the December 2000 Appropriate and Necessary Finding for Coal-fired Units*

The majority of the December 2000 finding concerned Hg emissions from coal-fired Utility Units. *See, e.g.*, 65 FR 79826 (''mercury * * * is emitted from coal-fired units, and * * * is the HAP of greatest concern to public health from the industry.''); 65 FR 79829–30 (conclusions section of December 2000 finding focuses almost exclusively on Hg); Utility Study, ES–27 (''mercury from coal-fired utilities is the HAP of greatest potential concern.''). For that reason, we first address how EPA erred in making the appropriate and necessary finding for coal-fired units based on Hg emissions. We then discuss the December 2000 finding for coal-fired units with regard to non-Hg HAP.

#### 1. It Is Not Appropriate and Necessary To Regulate Coal-Fired Units on the Basis of Hg Emissions

a. It Is Not Appropriate to Regulate Coal-fired Units on the Basis of Hg Emissions. As noted above, EPA's December 2000 ''appropriate'' finding is framed primarily in terms of health effects resulting from Hg emissions from coal-fired Utility Units.[22] *See* 65 FR 79829. The December 2000 finding also discusses environmental effects, primarily in the context of public health. In particular, the appropriate finding discusses the effects of Hg on fish because the public's primary route of exposure to Hg is through consumption of fish containing methylmercury. *See* 65 FR 79829–30. *See also* Section VI (discussing health effects of Hg). The December 2000 finding also discusses briefly the effects of methymercury on certain fish-eating wildlife, such as racoons and loons. See 65 FR 79830.

As explained above, EPA interprets section 112(n)(1)(A) as not requiring the Agency to consider environmental effects of utility HAP emissions that are unrelated to public health. Nevertheless, EPA believes it has authority under the ''appropriate'' inquiry to consider other factors, including non-public health related environmental factors. As explained above, however, given the focus in section 112(n)(1)(A) on hazards to public health, we believe that environmental factors unrelated to public health, although they can be considered in the appropriate inquiry, may not independently or, in conjunction with one another, justify regulation of Utility Units under section 112 when EPA has concluded that hazards to public health are not reasonably anticipated to result from utility HAP emissions.

EPA reasonably addressed non-public health related environmental factors, such as exposure to wildlife, in the December 2000 finding, because we separately concluded that Hg emissions from coal-fired Utility Units pose hazards to public health. As explained below, we believe that our December 2000 appropriate finding lacks foundation, and that conclusion is supported by certain recent information. Specifically, we conclude today that the level of Hg emissions remaining after imposition of the requirements of the Act will not cause hazards to public health, and therefore we need not consider other factors, such as non-public health related environmental effects. We do, of course, discuss the effects of Hg on fish, because the ingestion of fish contaminated with methylmercury is the public's primary route of exposure to Hg. See Section VI (discussing health effects of Hg).[23]

As noted above, EPA's December 2000 appropriate finding for coal-fired units hinged primarily on the health and environmental effects resulting from Hg emissions. *See* 65 FR 79830 (''mercury in the environment presents significant hazards to public health and the environment.''). This finding lacks foundation, however, for the reasons described below.

(i) The December 2000 Appropriate Finding Is Overbroad To The Extent It Hinged On Environmental Effects. EPA should not have made its appropriate

[21] We received no adverse comments concerning our subcategorization of Utility Units for purposes of section 112(n)(1)(A).

[22] The ''appropriate'' rationale set forth in the December 2000 finding focused exclusively on Hg with regard to coal-fired Utility Units. The December 2000 ''necessary'' finding can be read, however, to suggest that under the appropriate prong, EPA also determined that non-Hg from coal-fired Utility Units resulted in hazards to public health. See 65 FR 79830 (''*It is necessary to regulate HAP emissions from coal- and oil-fired*'' Utility Units under section 112 ''because the implementation of other requirements of the CAA will not address the serious public health and environmental hazards arising from such emissions.''). As explained below in section IV.B, the record that was before the Agency in December 2000 confirms that the non-Hg HAP emissions remaining ''after imposition of the requirements of th[e] Act'' do not result in hazards to public health. In the proposed rule, EPA solicited comment on this issue. We did not receive any new information concerning non-Hg HAP during the comment period that would cause us to change our position as to these HAP.

[23] We note, however, that as part of our overall inquiry into the effects of Hg emissions, we assessed the available information on the environmental effects of Hg emissions, including effects that appear to be unrelated to public health. See 1997 Mercury Report to Congress. While that information, in a very general sense, suggests that environmental effects of Hg emissions (unrelated to public health) may be of some concern and therefore warrant further study, the available information is not specific to the effects of Hg emissions from domestic utilities. See RIA Appendix C. Thus, even if EPA were either required or permitted to give unlimited consideration to these non-health-related environmental effects of utility Hg emissions in making the regulatory determination under section 112(n)(1)(A), we would conclude that there is insufficient causal information to conclusively link utility emissions to deleterious effects (in wildlife) from Hg exposure.

finding because of ''hazards to * * * the environment'' resulting from Hg emissions from coal-fired Utility Units. Section 112(n)(1)(A) requires EPA to analyze only the ''hazards to public health'' resulting from utility HAP emissions, not the environmental effects caused by such emissions. Under section 112(n)(1)(A), the condition precedent for regulation under section 112 is public health hazards, not environmental effects, which Congress included in other provisions of section 112. *See, e.g.*, 112(c)(3) (''a threat of adverse effect to human health or the environment.''). The Supreme Court has recognized that ''where Congress includes particular language in one section of a statute but omits it in another section of the same Act, it is generally presumed that Congress acts intentionally * * * in the disparate inclusion or exclusion.'' *Russello* v. *United States,* 464 U.S. 16, 23 (1983). Accordingly, EPA erred in its December 2000 ''appropriate'' finding to the extent that it hinged on the environmental effects of HAP, including Hg.

(ii) The December 2000 Appropriate Finding Lacks Foundation Because EPA Did Not Fully Consider The Hg Reductions That Would Result From ''Imposition of the Requirements of th[e] Act.'' As explained above, EPA interprets section 112(n)(1)(A) as providing that the ''appropriate'' finding should be made by reference to the level of HAP emissions remaining after ''imposition of the requirements of th[e] Act.'' We reasonably interpret the phrase ''imposition of the requirements of th[e] Act'' to include those requirements that EPA should have reasonably anticipated would be implemented and would result in reductions of utility HAP emissions.

The December 2000 ''appropriate'' finding lacks foundation because EPA failed to fully account for the Hg emissions remaining after ''imposition of the requirements of th[e] Act.''[24] That failure resulted in an overestimate of the remaining utility Hg emissions, which is the level of emissions that we considered in making our December 2000 appropriate finding. Had we properly considered the Hg reductions remaining ''after imposition of the requirements of th[e] Act'' in December 2000, we might well have (and, as discussed below, now believe should have) reached a different conclusion as to whether it was ''appropriate'' to regulate coal-fired units on the basis of Hg emissions.

We begin our analysis with a brief background concerning the Utility Study. In an attempt to address the requirement in section 112(n)(1)(A) of evaluating utility emissions ''after imposition of the requirements of th[e] Act'', the Utility Study estimates utility HAP emissions as of the year 2010. See Utility Study ES–1. In quantifying 2010 utility HAP emissions, our analysis focused almost exclusively on the acid rain provisions of Title IV. Title IV of the CAA establishes a national, annual emissions cap for sulfur dioxide ($SO_2$) emissions from Utility Units, which is to be implemented in two phases. Phase I commences January 1, 1995, and Phase II on January 1, 2000.

EPA relied in the Utility Study on a 1997 Department of Energy report concerning the effects of the implementation of Title IV of the CAA on utilities. Utility Study 2–31 to 2–33, 2–39. That report provides that 53 percent of Utility Units subject to Phase 1 requirements switched to a lower-sulfur coal, 27 percent purchased additional emissions allowances, and 16 percent (*i.e.,* 27 Utility Units) installed flue gas scrubbers to comply with the Phase I requirements.[25] In the 2010 utility HAP emissions analysis, EPA accounted for the 27 Utility Units that installed scrubbers to comply with the phase I requirements. Utility Study 2–31. EPA accounted for these scrubbers in the 2010 analysis because it recognized that scrubbers, which control $SO_2$, achieve HAP reductions, including Hg.[26] Utility Study at ES–19 & 25, 1–2, 2–32, 3–14 (discussing ability of PM controls (including $SO_2$ controls) to reduce Hg and other HAP emissions from Utility Units).[27] Significantly, however, EPA did not incorporate into the 2010 utility HAP emissions analysis the Hg reductions that we reasonably should have anticipated achieving through implementation of the requirements of Title I of the CAA. See Utility Study, at 2–31 to 2–33. In this regard, EPA erred in, at least, two respects.

First, EPA erred by not accounting for the utility Hg reductions that it should have reasonably anticipated would result from implementation of the nonattainment provisions of Title I, including, in particular, the revised NAAQS for ozone that EPA issued in July 1997, before the report was completed, under the nonattainment provisions.[28] The Utility Study expressly recognizes that the revised NAAQS would result in, among other things, significant reductions of $SO_2$ and $NO_X$. See generally Utility Study at 1–2 to 1–3. The Utility Study also indicates that the revised NAAQS would result in approximately a 16 percent reduction (11 tons per year) of Hg emissions by 2010, primarily due to the fact that Utility Units would need to install controls, like scrubbers, to meet the $SO_2$ reductions needed to attain the PM NAAQS. (Utility Study 1–3, ES–25, 3–14). Notwithstanding these significant estimated reductions, EPA did not take these reductions into account in its 2010 utility HAP emissions analysis.[29] ES–25 (''analyses performed to assess compliance with the revised NAAQS * * * indicate that Hg emissions in 2010 may be reduced by approximately 16 percent (11 tpy) *over those projected in this report.*''). Accordingly, the December 2000 appropriate finding lacks foundation because we made the finding based on an inaccurate level of Hg emissions remaining after imposition of the requirements of the CAA. Had we properly accounted in December 2000 for the 11 tons per year of Hg reductions that we projected in our own analyses, we might well have (and, as discussed below, now believe should have) concluded that it was not appropriate to regulate coal-fired units under section

[24] For ease of reference, we refer to the level of utility Hg emissions remaining ''after imposition of the requirements'' of the CAA as the ''remaining Hg emissions.''

[25] Flue gas scrubbers are a type of control technology used to control $SO_2$.

[26] EPA did not account in its 2010 analysis for the installation of any scrubbers associated with Phase II of the acid rain program, because it only had industry projections as to which units would install scrubbers and, for various reasons, it did not find those projections reliable. Utility Study 2–31 to 2–33.

[27] In the December 2000 finding, we indicate that recent data show that technologies used to control criteria pollutants, like PM, $SO_2$, and $NO_X$ are not ''effective'' in controlling Hg. See 65 FR 79828. This statement is incorrect. It is not only inconsistent with other statements in the December 2000 finding, it is contrary to the record that was before the Agency in December 2000. The record indicates that technologies used to control PM, $SO_2$, and $NO_X$ do reduce HAP, including Hg. Furthermore, insofar as Hg is concerned, these technologies result in important reductions of oxidized Hg, which is the type of Hg that tends to deposit locally and regionally. Utility Study at ES–19 & 25, 1–2, 2–32, 3–14.

[28] For additional background concerning the nonattainment provisions of Title I and the revised PM and ozone NAAQS, see Section V below.

[29] In the Utility Study, we explained that we did not account for the identified Hg reductions in the 2010 analysis because we lacked information on the specific number of units that would install scrubbers and related PM control technologies since we had not yet designated which areas of the country were in nonattainment of the revised NAAQS. See Utility Study 2–32. Although we had not yet designated areas of the country as being in nonattainment of the revised standards, as explained in section V, we were generally aware of the likelihood of widespread nonattainment with the revised NAAQS. In fact, that recognition formed the basis of our analysis that resulted in an estimated 16 percent reduction in Hg emissions from implementation of the revised NAAQS.

112 on the basis of the remaining Hg emissions. Indeed, recent modeling confirms that we likely would have reached such a conclusion. That modeling specifically demonstrates that about a 13 ton reduction in utility Hg emissions from 1990 levels would result in a level of Hg emissions that does not cause hazards to public health. We conducted these recent analyses in conjunction with the recently signed Clean Air Interstate Rule (''CAIR'') issued pursuant to CAA section 110(a)(2)(D), which is explained more fully in section V below.

Second, EPA erred in December 2000 by not examining, and therefore not accounting for, the reductions in utility Hg emissions that would result from two other rules issued pursuant to Title I of the CAA. The first rule set new source performance standards (''NSPS'') under CAA section 111(b) for $NO_X$ emitted from utility and industrial boilers. The second rule, promulgated under CAA section 110(a)(2)(D), requires 22 states and the District of Columbia to revise their state implementation plans (''SIP'') to mitigate for the interstate transport of ozone. This rule is called the $NO_X$ SIP-call rule and requires significant reductions of $NO_X$ emissions in the eastern half of the United States. EPA determined those $NO_X$ reductions by analyzing Utility Units and large nonpoint utility sources and identifying the amount of reductions that those units could achieve in a ''highly cost-effective'' manner. Both the $NO_X$ SIP call and the NSPS rule were premised on a $NO_X$ control technology called selective catalytic reduction (''SCR''). The data on the effectiveness of SCR at controlling utility Hg emissions was limited in February 1998. See Utility Study 2–32. As of December 2000, however, EPA had additional data that confirmed that SCR would lead to certain reductions in utility Hg emissions. *See, e.g.,* 65 FR 79829 (SCR—a $NO_X$ control technology ''may also oxidize mercury and therefore enhance mercury control.''). EPA therefore should have been able to reasonably estimate in December 2000 that some Hg reductions would occur as the result of implementation of the NSPS and the $NO_X$ SIP-call rules. Because we did not account for reductions in utility Hg emissions as the result of implementation of these rules, we made our appropriate finding in December 2000 based on an incorrect estimate of the remaining Hg utility emissions. Based on all of the above, the December 2000 ''appropriate'' finding lacked foundation because it was not based on the level of utility Hg emissions remaining ''after imposition of the requirements of th[e] Act.''

(iii) It Is Not Appropriate to Regulate Coal-fired Utility Units Under Section 112 on the Basis of Hg Emissions Because New Information Reveals that the Level of Utility Hg Emissions Remaining After Imposition of the Requirements of the CAA Does Not Cause Hazards to Public Health. In addition to the errors noted above with regard to the December 2000 finding, we have new information that confirms that it is not appropriate to regulate coal-fired units under section 112 on the basis of Hg emissions. EPA recently signed a rulemaking implementing section 110(a)(2)(D), called the Clean Air Interstate Rule. (See Section V below for further discussion of CAIR.) This rulemaking, among other things, requires a number of eastern states to develop SIPs providing for substantial reductions of $SO_2$ and $NO_X$ emissions. Although affected states retain flexibility to decide how to achieve those reductions, EPA has concluded that the reductions from Utility Units are highly cost-effective, and anticipates that affected states will meet their emission reduction obligations by controlling Utility Unit emissions. EPA also concluded that the technologies that most cost-effectively achieve $SO_2$ and $NO_X$ reductions for Utility Units are scrubbers for $SO_2$ and SCR for $NO_X$. These technologies, as noted above, result in reductions of utility Hg emissions. In conjunction with the CAIR rulemaking, EPA analyzed the nature of Hg emissions that would remain after implementation of the rule and assumed that states would choose to regulate Utility Units, which is the most cost-effective option for achieving the required reductions. That modeling reveals that the implementation of section 110(a)(2)(D), through CAIR, would result in a level of Hg emissions from Utility Units that would not cause hazards to public health. See Section V for further detail. Because this new information demonstrates that the level of Hg emissions projected to remain ''after imposition of'' section 110(a)(2)(D) does not cause hazards to public health, we conclude that it is not appropriate to regulate coal-fired Utility Units under section 112 on the basis of Hg emissions.[30]

In addition to CAIR, we today finalized a rule pursuant to section 111, called the Clean Air Mercury Rule (''CAMR''). (See section VII below for further discussion of CAMR.) That rule requires even greater reductions in Hg emissions from coal-fired Utility Units than CAIR. As explained in greater detail in Section VI, the computer modeling completed in support of that rule, like the modeling completed on CAIR, demonstrates that CAMR, independent of CAIR, will result in levels of utility Hg emissions that do not result in hazards to public health. Thus, the implementation of CAMR provides an independent basis for our conclusion that it is not appropriate to regulate coal-fired Utility Units under section 112 because the utility Hg emissions remaining after implementation of section 111 will be at a level that results in no hazards to public health.[31]

b. It Is Not Necessary to Regulate Coal-fired Units on the Basis of Hg Emissions. Even if Congress had intended EPA to focus on a more limited set of requirements in interpreting the phrase ''after imposition of the requirements of th[e] Act,'' that would mean only that EPA did not err in December 2000 in terms of its ''appropriate'' finding for coal-fired units based on Hg emissions. EPA nevertheless concludes today that it still erred in December 2000 with regard to its ''necessary'' finding. In section 112(n)(1)(A), Congress called on EPA to make a finding as to whether regulation of Utility Units under section 112 was not only ''appropriate,'' but ''necessary.'' To give effect to the term ''necessary,'' we interpret the ''necessary'' prong of the section 112(n)(1)(A) inquiry to require EPA to examine whether there are any other available authorities under the CAA that, if implemented, would effectively address the remaining Hg emissions from coal-fired Utility Units.

[30] The reductions achieved through CAIR overlap, in part, with the 11 tons per year of reductions discussed in the prior section, which EPA estimated in 1998 would occur as the result of implementation of the revised NAAQS. The reductions necessarily overlap because in the Utility Study EPA projected forward 13 years, by examining utility HAP emissions in 2010. In analyzing the level of utility Hg emissions remaining ''after imposition of [section 110(a)(2)(D)]'' through CAIR, we are accounting for the full impact of CAIR and that necessarily includes reductions that occur between today and 2010, and beyond. See Section V (discussing requirements of CAIR in 2010 and 2015).

[31] Nothing in section 112(n)(1)(A) precludes EPA from revising a prior appropriate and necessary finding based on new information. In light of CAIR and, independently, CAMR, we can now reasonably anticipate the reductions in utility Hg emissions that would result from implementation of sections 110(a)(2)(D) and 111 of the CAA. Accordingly, we are accounting for those reductions in assessing the level of utility Hg emissions remaining after ''imposition of the requirements of th[e] Act,'' which include section 110(a)(2)(D) and 111. We then based our new appropriate finding on these remaining Hg emissions.

In December 2000, EPA did not consider CAA sections 110(a)(2)(D)[32] and 111,[33] which are viable alternative authorities under the CAA, that, if implemented, would effectively address the remaining utility Hg emissions. See Section VI below. Regulation under these authorities would effectively address the remaining utility Hg emissions for two primary reasons. First, as demonstrated in section VI below, the level of utility Hg emissions remaining after implementation of CAIR will not result in hazards to public health. Similarly, as shown in section VI below, the CAMR, which requires even greater Hg reductions than CAIR, will, once implemented, result in a level of utility Hg emissions that does not cause hazards to public health.

In addition, controlling Hg emissions through a cap-and-trade system—whether that control is through direct regulation under section 111 or indirect regulation under section 110(a)(2)(D)—is an efficient means of regulating Utility Units. See CAMR final rule (signed on March 15, 2005) (discussing basis and purpose of the regulations). As an initial matter, a cap-and-trade system, as opposed to the control regime imposed pursuant to section 112(d), provides Utility Units the flexibility to pursue a least-cost compliance option to achieve the required emissions reductions.

Sources have the choice of complying with the reductions in a variety of ways, such as fuel switching, installing different pollution control technologies, installing new or emerging control technologies and/or buying allowances to emit from another source that has controlled its emissions to a level below what the regulation requires. This compliance flexibility allows Utility Units to respond to changing electricity generation demands, economic market conditions or unanticipated weather situations (*e.g.*, extremely hot or cold periods) without jeopardizing their compliance status, or the stability of the overall cap. In addition, the certainty provided by the emissions cap and the timeline for declining emissions provide important information for industry to make strategic, long-range business decisions.

Moreover, under a cap-and-trade approach, most of the reductions are projected to result from larger units installing controls and selling excess allowances, due to economies of scale realized on the larger units versus the smaller units. Indeed, EPA's modeling of trading programs demonstrates that large coal-fired Utility Units, which tend to have higher levels of Hg emissions, will achieve the most cost-effective emission reductions. These units are more likely to over-control their emissions and sell allowances, than to not control and purchase allowances. This model prediction is consistent with principles of capital investment in the utility industry. Under a trading system where the firm's access to capital is limited, where the up-front capital costs of control equipment are significant, and where emission-removal effectiveness (measured in percentage of removal) is unrelated to plant size, from an economics standpoint, the utility company is more likely to allocate pollution-prevention capital to its larger facilities than to the smaller plants (since more allowances will be earned from the larger facilities). Economies of scale of pollution control investment will also favor investment at the larger plants. Further, insofar as large coal-fired Utility Units tend to be newer and/or better maintained than medium-sized and small facilities, it can be expected that companies will favor investments in plants with a longer expected lifetime. These modeled predictions are consistent with the pattern of behavior that EPA has observed over the past decade through implementation of the $SO_2$ emissions trading program under Title IV of the CAA. Thus, under a cap-and-trade program, Hg reductions result from units that are most cost effective to control, which enables those units that are not considered to have cost effective control alternatives to use other mechanisms for compliance, such as buying allowances. By contrast, regulating pursuant to a control regime like section 112(d) does not result in the cost efficiencies that are attendant a cap-and-trade program. For example, under section 112(d), each facility must meet a specific level of emission control, which can result in increased compliance costs, particularly for the smaller Utility Units given economies of scale.

Finally, trading provides greater incentives for the development and adoption of new technologies, which could lead to a greater level of emissions control. See generally 69 FR 4686–87. An additional benefit of the cap-and-trade programs under sections 110(a)(2)(D) and 111 is that they dovetail well with each other. In particular, the coordinated regulation of $SO_2$, $NO_X$, and Hg through CAIR and CAMR improves the cost effective manner of regulation because the reductions are being achieved simultaneously using in some cases the same technology to control more than one pollutant. In addition, the cap-and-trade programs under sections 110(a)(2)(D) complement other cap-and-trade programs that directly affect Utility Units, such as the $NO_X$ SIP-call final rule and the regulations implementing Title IV, which only further enhances the efficiencies of emission control from such units.

In light of CAA sections 110(a)(2)(D) and 111, we believe that we should not have concluded in December 2000 that it ''is necessary'' to regulate Utility Units under section 112 and therefore our ''necessary'' finding was in error. Moreover, even setting aside the error that we made in December 2000, we now recognize the availability of these other statutory provisions and we further conclude today that it is not necessary to regulate coal-fired Utility Units under section 112 on the basis of the remaining Hg emissions. CAA section 110(a)(2)(D), as implemented through CAIR, and independently section 111, as implemented through CAMR, will effectively address the Hg emissions remaining from coal-fired Utility Units ''after imposition of the requirements of th[e] Act.''

In sections V and VII below, we address sections 110(a)(2)(D) and 111 and provide a thorough discussion of the legal authority under each provision. We also explain in Section VI that after implementation of CAIR, and independently, CAMR, we do not anticipate hazards to public health resulting from Hg emissions from coal-fired Utility Units.

[32] In January 2004, the proposed section 111 rule was premised, in part, on the reductions in Hg emissions that EPA anticipated would be achieved through CAIR. In response to comments received on the CAMR, we conducted additional modeling that confirmed that CAIR alone, once implemented, would result in levels of utility Hg emissions that do not cause hazards to public health. (See Section VI below). Accordingly, we now believe that CAA section 110()(2)(D) constitutes yet another viable authority under the CAA that, once implemented, will effectively address the remaining utility Hg emissions.

[33] In the Utility Study, we considered section 111 of the CAA, noting that ''new source performance standards currently provide the major regulatory authority for the control of air emissions from utilities.'' Utility Study 1–6. We recognized that we had issued NSPS for PM for Utility Units and we noted that such requirements would result indirectly in the control of certain HAP, including Hg. EPA did not, however, address in the Utility Study the question of whether HAP from utilities could be regulated under the authority of section 111 [Utility Study 1–5–6]. As explained in the proposed rule, we conducted a thorough re-evaluation of the provisions of the CAA and have concluded that section 111 provides authority to regulate HAP from new and existing Utility Units. See Section VII below (discussing legal authority under section 111).

2. It Is Not Appropriate and Necessary to Regulate Coal-Fired Units on the Basis of Non-Hg Emissions

In the study required by section 112(n)(1)(A), and detailed in the Utility Study, EPA identified 67 HAP as potentially being emitted by Utility Units. (Utility Study, ES–4). Based on a screening assessment designed to prioritize HAP for further evaluation, EPA identified 14 HAP as a priority for further evaluation. (Id.). Of the 14 HAP identified for further evaluation, 12 HAP (arsenic, beryllium, cadmium, chromium, manganese, nickel, hydrogen chloride, hydrogen fluoride, acrolein, dioxins, formaldehyde and radionuclides) were identified for further study based on potential for inhalation exposure and risks. (Utility Study, ES–6). Four of those 12 HAP (arsenic, cadmium, dioxins and radionuclides) plus Hg and lead were considered priority for multipathway exposure. (*Id.*). Of those six HAP, four (arsenic, Hg, dioxins and radionuclides) were identified as the highest priority to assess for multipathway exposure and risks. (Utility Study, ES–6, 7). The other 53 HAP were not evaluated beyond the screening assessment. (Utility Study, ES–7).

In evaluating the potential for inhalation exposure and risks for the 12 HAP identified through the screening assessment as priority for that purpose, EPA estimated the high-end inhalation cancer risk for each HAP identified as a carcinogen and the high-end inhalation noncancer risks for the remaining HAP for both coal- and oil-fired Utility Units in 2010. (Utility Study, 6–16, tables 6–8 and 6–9). That evaluation indicated that there was no maximum individual risk (MIR) for cancer greater than $1 \times 10^{6}$ for beryllium, cadmium, dioxin and nickel emissions from coal-fired Utility Units and for beryllium, cadmium and dioxin emissions from oil-fired Utility Units. (*Id.*) With regard to dioxins, the Utility Study specifically concluded that the quantitative exposure and risk results did not conclusively demonstrate the existence of health risks of concern associated with inhalation exposures to utility emissions on a national scale or from any actual individual utility. (Utility Study, 11–5). The Utility Study thus indicates that inhalation of beryllium, cadmium and dioxin emissions from coal and oil-fired Utility Units and emissions of nickel from oil-fired Utility Units are not of significant concern from a public health standpoint because such exposure does not present a maximum individual risk (MIR) for cancer greater than $1 \times 10^{6}$. With regard to lead emissions, EPA found that emission quantities and inhalation risks were relatively low and, therefore, decided not to conduct future evaluations of multipathway exposures to lead resulting from Utility Unit emissions. (Utility Study, ES–24). For arsenic, EPA concluded that there were several uncertainties associated with both the cancer risk estimates and the health effects data such that further analyses were needed to characterize the inhalation risks posed by arsenic emissions from Utility Units. (Utility Study, ES–21). The inhalation exposure assessment did not identify any exceedances of the health benchmarks (*e.g.*, RfCs) for hydrogen chloride or hydrogen fluoride, thus indicating that Utility Unit emissions of those HAP did not pose a significant public health concern. (Utility Study chapters 6 and 9.)

a. It Is Not Appropriate to Regulate Coal-fired Units on the Basis of Non-mercury HAP Emissions. The EPA erred in the December 2000 Regulatory Determination to the extent that its ''appropriate'' finding for coal-fired Utility Units was based, in any way, on hazards to public health or the environment arising from emissions of non-mercury HAP from coal-fired Utility Units. Based on the information before it at the time, EPA could not have reasonably concluded that coal-fired Utility Unit non-mercury HAP emissions presented a hazard to public health. In addition, as stated above, EPA should not have considered environmental effects in the December 2000 Regulatory Determination's consideration of whether it was appropriate to regulate HAP emissions from coal-fired Utility Units under section 112.

(i) Non-Mercury Metallic HAP. In the December 2000 Regulatory Determination, EPA indicated that there were a few metallic HAP (*e.g.*, chromium and cadmium) which were of potential concern for carcinogenic effects, but stated that ''the results of the risk assessment (performed in conjunction with the Utility Study) indicate that cancer risks are not high''. (*See* 65 FR 79825, 79827.) The EPA acknowledged, however, that the cancer risks were not low enough to eliminate those metals as a potential concern for public health (*Id.*). This latter statement, at least as it pertains to cadmium, is at odds with the results of the risk assessment set forth in the Utility Study and discussed above. In the Utility Study, EPA determined that there was no maximum individual risk (MIR) for cancer greater than $1 \times 10^{6}$ due to inhalation of cadmium emissions from Utility Units. In the Proposed Rule, EPA stated that although it recognized the existence of uncertainties with regard to the data and information obtained prior to the December 2000 Regulatory Determination regarding potential hazards to public health resulting from Utility Unit emissions of non-mercury metallic HAP, the Agency believed that the uncertainties associated with those emissions were so great that it was not appropriate to regulate them at that time because they do not pose a hazard to public health that warrants regulation. (69 FR 4652, 4688, January 30, 2004). The EPA continues to believe that had it properly accounted for the uncertainties regarding the data and information on potential hazards to public health resulting from Utility Unit emissions of non-mercury metallic HAP in making the December 2000 appropriate finding it would have concluded that it was not appropriate to regulate such emissions because they do not cause a hazard to public health. The EPA has not discovered any new information on hazards to public health arising from such emissions that invalidates this conclusion, either through its own efforts or in response to the Proposed Rule.

(ii) Dioxins. In the December 2000 Regulatory Determination, EPA also identified dioxins as being of potential concern and indicated that they may be evaluated further during the regulatory development process. (*See* 65 FR 79825, 79827.) The EPA did not, however, indicate that those concerns rose to a level that warranted regulation of dioxins. Thus, EPA did not conclude, and could not have concluded, based on the record before it at the time of the December 2000 Regulatory Determination that it was appropriate to regulate coal-fired Utility Unit HAP emissions under section 112 of the CAA on the basis of dioxin emissions. In the Proposed Rule EPA stated that while it intended to continue to study dioxins in the future, the Utility Study and the information EPA had obtained since finalizing the Utility Study revealed no public health hazards reasonably anticipated to occur as a result of emissions of dioxins by Utility Units. (*See* 69 FR 4652, 4688). As is the case with non-mercury metallic HAP, EPA has neither discovered information on hazards to public health arising from Utility Unit emissions of dioxins based on its own efforts, nor received such information in response to the Proposed Rule. The EPA therefore concludes that its appropriate finding in December 2000 lacked foundation because it could not have reasonably concluded that the

level of remaining utility dioxin emissions results in hazards to public health.

(iii) Acid Gases. In the December 2000 Regulatory Determination, EPA identified emissions of hydrogen chloride and hydrogen fluoride as being of potential concern and indicated that such emissions may be evaluated further during the regulatory development process. (See 65 FR 79825, 79827.) The EPA did not, however, indicate that it believed that it was appropriate to regulate such emissions, under section 112 or otherwise. As indicated in the Proposed Rule, EPA did in fact further evaluate Utility Unit emissions of hydrogen chloride and hydrogen fluoride. (See 69 FR 4652, 4688, fn. 10; ''Modeling results for hydrogen chloride, hydrogen fluoride and chlorine emissions from coal-fired utility boilers'', December 12, 2003, OAR–2002–0056–0015). That modeling indicates that individuals are not exposed to acid gas emissions from Utility Units at concentrations which pose hazards to public health. EPA has neither discovered information on hazards to public health arising from Utility Unit emissions of acid gases based on its own efforts, nor received such information in response to the Proposed Rule. EPA therefore concludes that its appropriate finding in December 2000 lacked foundation because the level of remaining utility acid gas emissions does not result in hazards to public health.

For the reasons stated above, EPA finds that it could not reasonably have concluded that it was appropriate to regulate coal-fired Utility Units under section 112 due to emissions of non-mercury HAP based on the record before it at the time of the December 2000 Regulatory Determination. The EPA further finds that it has not itself discovered any information which would support the conclusion that it is appropriate to regulate non-mercury HAP emissions by coal-fired Utility Units under section 112 subsequent to the December 2000 Regulatory Determination, nor has it received any such information in response to the January 2004 Proposed Rule, the March 2004 Supplemental Notice or the December 2004 Notice of Data Availability. Further, EPA has concluded that it did not, and should not, rely on potential environmental effects alone in determining whether it was appropriate to regulate coal-fired Utility Units under section 112. The EPA, therefore, finds that, based on the record before it at the time, it was in error in determining that it was appropriate to regulate coal-fired Utility Unit HAP emissions under section 112 to the extent that the determination was based in any way on the hazards to public health of non-mercury HAP emissions or on environmental effects resulting from such emissions.

b. It Is Not Necessary to Regulate Coal-fired Units on the Basis of Non-Mercury HAP Emissions. In determining whether it is appropriate and necessary to regulate Utility Unit HAP emissions under section 112, the threshold question is whether it is appropriate to regulate such emissions at all. Where, as here, EPA cannot reasonably conclude that it is appropriate to regulate such emissions, the Agency does not need to resolve the question of whether it is necessary to regulate such emissions under section 112, or elsewhere. In any event, even if EPA could have reasonably concluded that it was appropriate to regulate non-mercury HAP emissions from coal-fired Utility Units, it would not have been reasonable for the Agency to find that it was necessary to regulate such emissions under section 112 since, as discussed above, it should have realized that there was an available alternative mechanism, such as section 111, for regulating such emissions had it been appropriate to do so. See also Section VII below.

*B. Revision of the December 2000 Appropriate and Necessary Finding for Oil-fired Units*

1. It Is Not Appropriate and Necessary To Regulate Oil-Fired Units on the Basis of Nickel Emission

a. It Is Not Appropriate to Regulate Oil-fired Units on the Basis of Nickel Emissions. In finding that the regulation of HAP emissions from oil-fired Utility Units was appropriate and necessary in its December 2000 Regulatory Determination, EPA did not clearly identify the basis for this finding beyond stating that there remained uncertainties regarding the extent of the public health impact from HAP emissions from oil-fired units and that those uncertainties led the Administrator to find that regulation of HAP emission from such units under section 112 is appropriate and necessary. (See 65 FR 79825, 79830). Table 1 in the 2000 determination does, however, indicate that nickel is the metallic HAP emitted in the largest quantities by oil-fired Utility Units and that some nickel compounds are carcinogenic. (See 65 FR 79825, 79828). It therefore appears that EPA's finding was based at least in part on its concerns regarding perceived hazards to public health arising from inhalation exposure to nickel emissions from oil-fired Utility Units. This is consistent with the Utility Study which, based on very conservative assumptions regarding the carcinogenicity of the nickel emitted by such units, identifies nickel as the HAP emitted by oil-fired Utility Units which poses the highest cancer maximum individual risk. (Utility Study, Table 6–3, p. 6–8). The Utility Study identifies 11 oil-fired utility plants as having emissions causing maximum individual risk of cancer greater than $10^{-6}$ based on nickel emissions (*Id.*)

In the Proposed Rule, EPA stated that it continued to believe that the record supports a distinction between the treatment of nickel emissions from oil-fired Utility Units and other non-nickel HAP emissions from such units. EPA proposed to conclude that it was not appropriate to regulate the non-Ni HAP. EPA also proposed to treat nickel from oil-fired units differently based on the amount of nickel emitted annually and the scope of adverse health effects (See 69 FR 4652, 4688). Based on its analysis of new information obtained in response to the Proposed Rule, EPA has determined that the distinction between nickel and the remaining HAP from oil-fired units cannot be supported. EPA finds that it is not appropriate to regulate nickel emissions from oil-fired Utility Units and that it is, therefore, not appropriate to regulate oil-fired Utility Units. This finding is based on the following: (1) The significant reductions in the total nationwide inventory of oil-fired Utility Units; and (2) the changing fuel mixtures being used at the remaining units.

Nickel emissions from oil-fired Utility Units have been substantially reduced since the 1998 Utility Report to Congress through a combination of unit closures and fuel switching. The 11 oil-fired plants identified in the Utility Study as having emissions causing a maximum individual risk of cancer greater than $10^{-6}$ based on nickel emissions were comprised of 42 individual units. Of those 42 units, 12 units have permanently ceased operation or are out of service. (OAR–2002–0056–2046 at pp. 12–13; OAR–2002–0056–5998). In addition, 6 of the original 42 units have reported to the U.S. Department of Energy (DOE) that their fuel mix now includes natural gas. Earlier reports did not show these units as using natural gas as a fuel. (OAR–2002–0056–5998). The use of natural gas as a part of their fuel mix would decrease the nickel emissions from these 6 units. Similarly, another 5 units report using a mix of natural gas and distillate oil (rather than residual oil) in

2003. (OAR–2002–0056–5998). Since distillate oil contains less nickel than the residual oil previously burned by these units, it is reasonable to assume that these units currently emit less nickel than was previously the case. Another 2 units now fire a residual oil/natural gas mixture and have limited their residual oil use through permit restrictions to no greater than 10 percent of the fuel consumption between April 1 and November 15, with natural gas being used for at least 90 percent of total fuel consumption. (OAR–2002–0056–2046 at p. 13). Finally, five units have effectively eliminated their nickel emissions since the Utility Study by switching to burning natural gas exclusively. (OAR–2002–0056–2046 at pp. 12–13; OAR–2002–0056–5998). Taken as a whole, these changes mean that 30 of the original 42 units identified in the Utility Study have taken steps to reduce or actually eliminate their nickel emissions. Of the original 11 plants identified in the Utility Study, only 2, both in Hawaii, have units for which actions that will result in reduced nickel emissions do not appear to have been taken. (OAR–2002–0056–6871) In addition to the closure of the 12 units identified as being of potential concern in the Utility Study, there has been a steady decrease in the number of oil-fired Utility Units generally over the past decade and this trend is likely to continue. In fact, the latest DOE/EIA projections (OAR–2002–0056–5999) estimate no new utility oil-fired generating capacity and decreasing existing oil-fired generating capacity through 2025, with an additional 29.2 gigawatts of combined oil- and natural gas-fired existing capacity being retired by 2025.

Based on the foregoing, EPA concludes that it is not appropriate to regulate oil-fired Utility Units under section 112 because we do not anticipate that the remaining level of utility nickel emissions will result in hazards to public health.

b. It Is Not Necessary to Regulate Oil-fired Units on the Basis of Nickel Emissions. Because EPA could not have reasonably found that it was appropriate to regulate nickel emissions from oil-fired Utility Units based on the record before it at the time of the December 2000 Regulatory Determination, it should not have made a finding that it was necessary to regulate such emissions. Information obtained in the course of the rulemaking since the Proposed Rule has confirmed this conclusion. In any event, even if EPA could have reasonably concluded that it was appropriate to regulate nickel emissions from oil-fired Utility Units, it would not have been reasonable for the Agency to find that it was necessary to regulate such emissions under section 112 since, as discussed above, it should have realized that there was an available alternative mechanism, section 111, for regulating such emissions had it been appropriate to do so. See also Section VII below.

2. It Is Not Appropriate and Necessary To Regulate Oil-Fired Units on the Basis of Non-Nickel HAP Emissions

a. It Is Not Appropriate to Regulate Oil-fired Units on the Basis of Non-nickel HAP Emissions. As is the case with emissions of nickel, the record before EPA at the time of the December 2000 Regulatory Determination does not reasonably support a finding that it is appropriate to regulate emissions of any other HAP from oil-fired Utility Units. In the December 2000 Regulatory Determination, EPA stated that there remain uncertainties regarding the extent of the public health impact from HAP emissions from oil-fired Utility Units and, on that basis, found that it was appropriate and necessary to regulate oil-fired Utility Units under section 112. (See 65 FR 79825, 79830.) The EPA neither identified the HAP concerning which there were uncertainties nor identified what those uncertainties were. EPA has neither discovered information on hazards to public health arising from the remaining non-nickel emissions of oil-fired Utility Units, nor received such information in response to the Proposed Rule. EPA therefore concludes that its appropriate finding in December 2000 lacked foundation because, given the level of remaining non-nickel HAP emissions from Utility Units, the Agency did not and does not have any information on the hazards to public health reasonably anticipated to occur. Indeed, the uncertainties that exist with regard to the data and information on these emissions are so great that the Agency has not identified any hazards to public health.

b. It Is Not Necessary to Regulate Oil-fired Units on the Basis of Non-nickel HAP Emissions. Because EPA finds that it is not appropriate to regulate oil-fired Utility Units on the basis of non-nickel HAP emissions, it also finds that it is not necessary to regulate oil-fired Utility Units on the basis of such emissions. In any event, even if EPA could have reasonably concluded that it was appropriate to regulate non-nickel HAP emissions from oil-fired Utility Units, it would not have been reasonable for the Agency to find that it was necessary to regulate such emissions under section 112 since, as discussed above, it should have realized that there was an available alternative mechanism, section 111, for regulating such emissions had it been appropriate to do so. See also Section VII below.

## V. Statutory and Regulatory Overview of CAA Section 110(a)(2)(D) and Summary of EPA's Clean Air Interstate Rule, Which Implements Section 110(a)(2)(D)

### *A. The Clean Air Interstate Rule and Clean Air Act Section 110(a)(2)(D)*

1. Background for Promulgation of the Clean Air Interstate Rule

The Administrator signed the notice of final rulemaking for the Clean Air Interstate Rule (CAIR) on March 10, 2005. The background for CAIR is fully described in the preambles to the final rule, the notice of proposed rulemaking, 69 FR 4565 (January 30, 2004) and the notice of supplemental rulemaking, 69 FR 12398 (March 16, 2004), and is briefly summarized below.

a. PM 2.5 NAAQS, 8-hour Ozone NAAQS, and the Nonattainment Problems. By notice dated July 18, 1997, we revised the NAAQS for particulate matter to add new standards for fine particles, using as the indicator particles with aerodynamic diameters smaller than a nominal 2.5 micrometers, termed PM 2.5. 62 FR 38652. We established health- and welfare-based (primary and secondary) annual and 24-hour standards for PM 2.5. The annual standard is 15 micrograms per cubic meter, based on the 3-year average of annual mean PM 2.5 concentrations. The 24-hour standard is a level of 65 micrograms per cubic meter, based on the 3-year average of the annual 98th percentile of 24-hour concentrations.

By a separate notice dated July 18, 1997, EPA also promulgated a revised primary NAAQS for ozone (and an identical secondary ozone NAAQS). This revised NAAQS, termed the 8-hour NAAQS, specified that the 3-year average of the fourth highest daily maximum 8-hour average ozone concentration could not exceed 0.08 ppm. (*See* 40 CFR 50.10) In general, the revised 8-hour standard is more protective of public health and the environment and more stringent than the pre-existing 1-hour ozone standard. Following promulgation of the 8-hour ozone and the PM 2.5 NAAQS, EPA anticipated that many areas of the country, particularly in the eastern half of the country, would have air quality violating one or both of those NAAQS.[34]

[34] Environmental Protection Agency, 1996. Review of the National Ambient Air Quality Standards for Particulate Matter: Policy Assessment

b. $SO_2$ and $NO_X$ as Precursors for PM 2.5 and 8-hour Ozone. Fine particles are emitted directly from emissions sources and also can be formed in the atmosphere through the reaction of gaseous precursors. Sulfur dioxide and nitrogen oxides are among the primary precursors to the ''secondary'' formation of PM 2.5.

Eight-hour ozone is exclusively a secondary pollutant. Ozone is formed by natural processes at high altitudes, in the stratosphere, where it serves as an effective shield against penetration of harmful solar UV–B radiation to the ground. The ozone present at ground level as a principal component of photochemical smog is formed in sunlit conditions through atmospheric reactions of two main classes of precursor compounds: VOCs and $NO_X$ (mainly NO and $NO_2$). Nitrogen oxides are emitted by motor vehicles, power plants, and other combustion sources, with lesser amounts from natural processes including lightning and soils.

Both PM 2.5 and 8-hour ozone are regional phenomena; that is each is caused by emissions over a broad geographic area. As a result, attainment of the PM 2.5 NAAQS requires reductions in $SO_2$ and $NO_X$ over a widespread area, and attainment of the 8-hour ozone NAAQS requires reductions in $NO_X$ over a widespread area. In the CAIR proposal, EPA described the photochemistry and need for regionwide reductions of precursors of both pollutants in detail. *See* 69 FR at 4572.

After promulgation of the PM 2.5 NAAQS, EPA was generally aware of the role of $SO_2$ and $NO_X$ emissions in the PM 2.5 nonattainment problem, and, therefore, of the need for widespread reductions. Similarly, after promulgation of the 8-hour ozone NAAQS, EPA was aware of widespread nonattainment, due to nonattainment of the pre-existing, one-hour ozone standard, and therefore of the need for widespread $NO_X$ reductions.

c. Coal-fired Utility Units Emit A Large Portion of $SO_2$ and $NO_X$ Emissions. Utility Units emit a large portion of both the $SO_2$ and $NO_X$ inventory. Congress clearly recognized that the utility industry emits a large portion of the nation's inventory of $SO_2$ and $NO_X$ emissions when Congress enacted the acid deposition provisions in the 1990 Clean Air Act Amendments. EPA noted in the CAIR proposal that Utility Units—

> are the most significant source of $SO_2$ emissions and a very substantial source of $NO_X$ in the * * * region [proposed to be affected by CAIR]. For example, EGUs [Utility Units] emissions are projected to represent approximately one-quarter (23 percent) of the total $NO_X$ emissions in 2010 and over two-thirds (67 percent) of the total emissions in 2010 in the 28-State plus DC region that [EPA proposed for] being controlled for both $SO_2$ and $NO_X$ after application of current CAA controls.

(*See* 69 FR 4565, 4609–10 January 30, 2004.)

Beginning in the mid-1990s, EPA has considered regional and national strategies to reduce interstate transport of $SO_2$ and $NO_X$. EPA described these efforts in the CAIR notice of final rulemaking.

3. Legal Authority

As noted above, in 1997, EPA revised the NAAQS for PM to add new annual average and 24-hour standards for fine particles, using PM 2.5 as the indicator (62 FR 38652). At the same time, EPA issued its final action to revise the NAAQS for ozone to establish new 8-hour standards (62 FR 38856.) Following promulgation of new NAAQS, the CAA requires all areas, regardless of their designation as attainment, nonattainment, or unclassifiable, to submit SIPs containing provisions specified under section 110(a)(2). SIPs for nonattainment areas are generally required to include additional emissions controls providing for attainment of the NAAQS. In addition, under the authority of section 110(a)(2)(D) and other provisions of section 110, EPA promulgated the $NO_X$ SIP-Call in 1998. In that rulemaking, EPA determined that 22 States and the District of Columbia in the eastern half of the country significantly contribute to 1-hour and 8-hour ozone nonattainment problems in downwind States.[35] This rule required those jurisdictions to revise their SIPs to include $NO_X$ control measures to mitigate the significant ozone transport. The EPA determined the emissions reductions requirements by projecting $NO_X$ emissions to 2007 for all source categories and then reducing those emissions through controls that EPA determined to be highly cost-effective. The affected States were required to submit SIPs providing the resulting amounts of emissions reductions.

Under the $NO_X$ SIP-Call, States had the flexibility to determine the mix of controls to meet their emissions reductions requirements. However, the rule provided that if the SIP controls Utility Units, then the SIP must establish a budget, or cap, for Utility Units. The EPA recommended that each State authorize a trading program for $NO_X$ emissions from Utility Units. We developed a model cap and trade program that States could voluntarily choose to adopt, and all did so.

4. CAIR

In CAIR, EPA established SIP requirements for the affected upwind States under the authority of CAA section 110(a)(2)(D) and other provisions of section 110.[36] Based on air quality modeling analyses and cost analyses, EPA concluded that $SO_2$ and $NO_X$ emissions in certain States in the eastern part of the country, through the phenomenon of air pollution transport, contribute significantly to downwind nonattainment of the PM 2.5 and 8-hour ozone NAAQS. In CAIR, EPA required SIP revisions in 28 States and the District of Columbia to reduce $SO_2$ and/or $NO_X$ emissions, which are important precursors of PM 2.5 ($NO_X$ and $SO_2$) and ozone ($NO_X$). The affected States and the District of Columbia are required to adopt and submit the required SIP revision with the necessary control measures by 18 months from date of signature of CAIR.

The 23 States along with the District of Columbia that must reduce annual $NO_X$ emissions for the purposes of the PM 2.5 NAAQS are: Alabama, Florida, Georgia, Illinois, Indiana, Iowa, Kentucky, Louisiana, Maryland, Michigan, Minnesota, Mississippi, Missouri, New York, North Carolina, Ohio, Pennsylvania, South Carolina, Tennessee, Texas, Virginia, West Virginia, and Wisconsin.

The 25 States along with the District of Columbia that must reduce $NO_X$ emissions for the purposes of the 8-hour ozone NAAQS are: Alabama, Arkansas, Connecticut, Delaware, Florida, Illinois, Indiana, Iowa, Kentucky, Louisiana, Maryland, Massachusetts, Michigan, Mississippi, Missouri, New Jersey, New York, North Carolina, Ohio, Pennsylvania, South Carolina,

of Scientific and Technical Information. OAQPS Staff Paper. Research Triangle Park, NC: Office of Air Quality Planning and Standards; Report No. EPA–45/R–96–013.

[35] *See* ''Finding of Significant Contribution and Rulemaking for Certain States in the Ozone Transport Assessment Group Region for Purposes of Reducing Regional Transport of Ozone; Final Rule,'' 63 FR 57356 (October 27, 1998). The EPA also published two Technical Amendments revising the $NO_X$ SIP Call emission reduction requirements. (64 FR 26298; May 14, 1999 and 65 FR 11222; March 2, 2000).

[36] *See* ''Rule to Reduce Interstate Transport of Fine Particulate Matter and Ozone (Interstate Air Quality Rule); Proposed Rule,'' 69 FR 4566 (January 30, 2004); ''Supplemental Proposal for the Rule to Reduce Interstate Transport of Fine Particulate Matter and Ozone (Clean Air Interstate Rule); Proposed Rule,'' 69 FR 32684 (June 10, 2004); and the final rule ''Rule to Reduce Interstate Transport of Fine Particulate Matter and Ozone (Clean Air Interstate Rule),'' which was recently issued.

Tennessee, Virginia, West Virginia, and Wisconsin.

The emissions reductions requirements are based on controls that EPA determined to be highly cost-effective for Utility Units. However, States have the flexibility to choose the measures to adopt to achieve the specified emissions reductions. If the State chooses to control Utility Units, then it must establish a budget—that is, an emissions cap—for those sources. CAIR defines the Utility Units budgets for each affected State. Due to feasibility constraints, EPA is requiring that emissions reductions be implemented in two phases, with the first phase in 2009 (for $NO_X$) and 2010 (for $SO_2$), and the second phase in 2015.

As noted above, under the CAIR, each State may independently determine which emissions sources to subject to controls, and which control measures to adopt. The EPA's analysis indicates that emissions reductions from Utility Units are highly cost-effective, and in the CAIR, EPA encouraged States to adopt controls for Utility Units. States that do so must place an enforceable limit, or cap, on Utility Unit's emissions. The EPA calculated the amount of each State's Utility Unit emissions cap, or budget, based on reductions that EPA determined are highly cost-effective. States may allow their Utility Units to participate in an EPA-administered cap-and-trade program as a way to reduce the cost of compliance, and to provide compliance flexibility. The EPA will administer these programs, which will be governed by rules provided by EPA that States may adopt or incorporate by reference.

EPA estimated that the CAIR would reduce annual $SO_2$ emissions by 3.6 million tons by 2010 and by 4.0 million tons by 2015; and would reduce annual $NO_X$ emissions by 1.3 million tons by 2010 and by 1.5 million tons by 2015. If all the affected States choose to achieve these reductions through Utility Unit controls, then Utility Unit emissions in the affected States would be capped at 3.7 million tons in 2010 and 2.6 million tons in 2015; and Utility Unit annual $NO_X$ emissions would be capped at 1.5 million tons in 2010 and 1.3 million tons in 2015. The EPA estimated that the required $SO_2$ and $NO_X$ emissions reductions would, by themselves, bring into attainment 52 of the 80 counties that are otherwise expected to be in nonattainment for PM 2.5 in 2010, and 57 of the 75 counties that are otherwise expected to be in nonattainment for PM 2.5 in 2015. The EPA further estimated that the required $NO_X$ emissions reductions would, by themselves, bring into attainment 3 of the 40 counties that are otherwise expected to be in nonattainment for 8-hour ozone in 2010, and 6 of the 22 counties that are expected to be in nonattainment for 8-hour ozone in 2015. In addition, the CAIR would improve PM 2.5 and 8-hour ozone air quality in the areas that would remain nonattainment for those two NAAQS after implementation of CAIR. Because of the CAIR, the States with those remaining nonattainment areas will find it less burdensome and less expensive to reach attainment by adopting additional local controls. The CAIR would also reduce PM 2.5 and 8-hour ozone levels in attainment areas.

*C. Utility Mercury Emission Reductions Expected as Co-Benefits From CAIR*

The final CAIR requires annual $SO_2$ and $NO_X$ reductions in 23 States and the District of Columbia, and also requires ozone season $NO_X$ reductions in 25 States and the District of Columbia. Many of the CAIR States are affected by both the annual $SO_2$ and $NO_X$ reduction requirements and the ozone season $NO_X$ requirements. CAIR was designed to achieve significant emissions reductions in a highly cost-effective manner to reduce the transport of fine particles that have been found to contribute to nonattainment. EPA analysis has found that the most efficient method to achieve the emissions reduction targets is through a cap-and-trade system on the power sector that States have the option of adopting. In fact, States may choose not to participate in the optional cap-and-trade program and may choose to obtain equivalent emissions reductions from other sectors. However, EPA believes that a region-wide cap-and-trade system for the power sector is the best approach for reducing emissions. The power sector accounted for 67 percent of nationwide $SO_2$ emissions and 22 percent of nationwide $NO_X$ emissions in 2002.

EPA expects that States will choose to implement the final CAIR program in much the same way they chose to implement their requirements under the $NO_X$ SIP Call. As noted above, under the $NO_X$ SIP Call, EPA gave States ozone season $NO_X$ reduction requirements and the option of participating in a cap-and-trade program. In the final rulemaking, EPA analysis indicated that the most efficient method to achieve reductions targets would be through a cap-and-trade program. Each affected State, in its approved SIP, chose to control emissions from Utility Units and to participate in the cap-and-trade program.

Therefore, EPA anticipates that States will comply with CAIR by controlling Utility Unit $SO_2$ and $NO_X$ emissions. Further, EPA anticipates that States will implement those reductions through the cap-and-trade approach, since the power sector represents the majority of national $SO_2$ emissions and the majority of stationary $NO_X$ emissions, and represent highly cost-effective $SO_2$ and $NO_X$ sources to reduce. For further discussion of cost-effectiveness, see section IV of CAIR notice of final rulemaking. EPA modeled a region-wide cap and trade system on the power sector for the States covered by CAIR, and this modeling projected that most reductions in $NO_X$ and $SO_2$ would come through the installation of scrubbers, for $SO_2$ control, and selective catalytic reduction for $NO_X$ control (see Regulatory Impact Assessment for CAIR and CAMR in docket). Scrubbers and SCR are proven technologies for controlling $SO_2$ and $NO_X$ emissions and sources installed them to comply with the Acid Rain trading program and the $NO_X$ SIP Call trading program. EPA's modeling also projected that the installation of these controls would achieve Hg emission reductions as a co-benefit.

EPA projections of Hg co-benefits are based on 1999 Hg ICR emission test data and other more recent testing conducted by EPA, DOE, and industry participants. (For further discussion see Control of Emissions from Coal-Fired Electric Utility Boilers: An Update, EPA/Office of Research and Development, March 2005, in the docket). That emission testing has provided a better understanding of Hg emissions and their capture in pollution control devices. Mercury speciates into three basic forms, ionic, elemental, and particulate (particulate represents a small portion of total emissions). In general, ionic Hg compounds are more readily absorbed than elemental Hg and the presence of chlorine compounds (which tend to be higher for bituminous coals) results in increased ionic Hg. Overall the 1999 Hg ICR data revealed higher levels of Hg capture for bituminous coal-fired plants as compared to subbituminous and lignite coal-fired plants and a significant capture of ionic Hg in wet $SO_2$ scrubbers. Additional Hg testing indicates that for bituminous coals SCR has the ability to convert elemental Hg to ionic Hg and thus allow easier capture in a wet scrubber. This understanding of Hg capture was incorporated into EPA modeling assumptions and is the basis for our projections of Hg co-benefits from installation of scrubbers and SCR under CAIR.

The final CAIR requires annual $SO_2$ and $NO_X$ reductions in two phases, the

first phase in 2010 and the second phase in 2015. EPA modeling of CAIR projected that most reductions in $NO_X$ and $SO_2$ would come through the installation of scrubbers and SCR, and that the installation of these controls would also achieve Hg emission reductions as a co-benefit. Given the history of the Acid Rain and $NO_X$ SIP Call trading programs, and our experience with those programs, we anticipate that reductions in $SO_2$ emissions will begin to occur before 2010 because of the ability to bank $SO_2$ emission allowances, though to some degree this is limited by the time and resources needed to install control technologies. Companies have an incentive to achieve greater $SO_2$ reductions than needed to meet the current Acid Rain cap because the excess allowances they generate can be ''banked'' and either later sold on the market or used to demonstrate compliance in 2010 and beyond at the facility that generated the excess allowances. Based on the analysis of CAIR, EPA's modeling projects that Hg emissions would be 38.0 tons (12 tons of non-elemental Hg) in 2010, 34.4 tons in 2015 (10 tons of non-elemental Hg), and 34.0 tons in 2020 (9 tons of non-elemental Hg), about a 20 and 30 percent reduction (in 2010 and 2015, respectively) from a 1999 baseline of 48 tons.[37] For further discussion of EPA modeling results and projected emissions see Chapter 8 of the Regulatory Impact Assessment.[38]

[37] As discussed in the TSD, the emissions of reactive gaseous Hg and particle-bound Hg are most important for local and regional Hg deposition purposes, since they are substantially more likely to be deposited than elemental Hg. CAIR and CAMR will significantly reduce reactive gaseous Hg and particle bound Hg from 2001 levels. CAIR will reduce the levels from approximately 22 tons to 9 tons. CAMR will reduce this level further to between 7 and 9 tons, for a total reduction (with CAIR) of roughly 70 percent.

[38] In addition to CAIR, EPA recently promulgated another rule for Utility Units. Specifically, on March 15, 2005, the Administrator signed a final rulemaking called the Clean Air Mercury Rule (''CAMR'') pursuant to CAA section 111. This rule sets standards of performance for Hg emitted from both new and existing coal-fired Utility Units. Like CAIR, the rule establishes a cap-and-trade mechanism by which Hg emissions from new and existing coal-fired Utility Units are capped at specified, nation-wide levels. The first phase cap of 38 tons per year (''tpy'') becomes effective in 2010 and the second phase cap of 15 tpy becomes effective in 2018. Facilities must demonstrate compliance with the standards of performance by holding one ''allowance'' for each ounce (oz) of Hg emitted in any given year. Allowances are readily transferrable among all regulated units. As explained in section VI below, the level of Hg emissions remaining after implementation of CAMR do not result in hazards to public health.

## VI. Scientific and Technical Background and EPA'S Conclusions Concerning the Level of Utility Attributable Mercury Emissions After CAIR and CAMR

In this section, we explain why we believe the level of utility attributable Hg emissions remaining after imposition of CAIR, and independently, CAMR, will not result in hazards to public health. The issue of whether utility Hg emissions remaining after CAIR, and independently CAMR, result in hazards to public health is directly related to our conclusion, stated above in Section IV.A, that we cannot find it appropriate and necessary to regulate coal-fired Utility Units under section 112 on the basis of Hg emissions. This section includes an overview of the scientific and technical information relevant to evaluating utility Hg emissions and the public health impacts associated with such emissions. Below, we provide general background concerning the health impacts of methylmercury; the predominant exposure pathway by which humans are affected by methylmercury, which is by ingestion of fish containing methylmercury; and EPA's methodology for determining the impacts of utility Hg emissions on the amount of methylmercury found in fish tissue. This section also includes a summary of our conclusions, including that utility Hg emissions remaining after implementation of CAIR, and independently CAMR, are not reasonably anticipated to result in hazards to public health.

### *A. Human Health Impacts of Methylmercury Exposure and Amounts of Hg Emissions*

Hg is a persistent, bioaccumulative toxic metal that is emitted from power plants in three forms: Elemental mercury (Hg\0\), oxidized mercury (Hg\++\) compounds, as well as particle-bound mercury. Methylmercury is formed by microbial action in the top layers of sediment and soils, after Hg has precipitated from the air and deposited into water bodies or land. Once formed, methylmercury is taken up by aquatic organisms and bioaccumulates up the aquatic food web. Larger predatory fish may have methylmercury concentrations many times that of the water body in which they live.

While Hg is toxic to humans when it is inhaled or ingested, we focus on oral exposure of methylmercury in this rulemaking, as it is the route of primary interest for human exposures in the U.S. Methylmercury is a well-established human neurotoxicant. Methylmercury that is ingested by humans is readily absorbed from the gastrointestinal tract and can cause effects in several organ systems. The best studied effect of low level exposure is the ability of methylmercury to cause subtle, yet potentially important neurodevelopmental effects. Of particular concern is the effect of methylmercury on the developing fetal nervous system exposed in utero from maternal fish ingestion. Large prospective epidemiological studies have reported that prenatal methylmercury from environmental exposures has been associated with poor performance on neurobehavioral tests in children. These include tests that measure attention, visual-spatial ability, verbal memory, language skills, and fine motor function. These studies have been thoroughly reviewed, singly and as part of review groups, by many expert scientists, including a panel of the National Research Council (NRC) of the National Academy of Sciences (NAS).[39] While important, the weight of evidence for cardiovascular effects is not as strong as it is for childhood neurological effects and the state of the science is still being evaluated. However, some recent epidemiological studies in men suggest that methylmercury is associated with a higher risk of acute myocardial infaraction, coronary heart disease and cardiovascular disease in some populations. Other recent studies have not observed this association. The findings to date and the plausible biological mechanisms warrant additional research in this area (Stern 2005; Chan and Egeland 2004). There is some recent evidence that methylmercury may result in genotoxic or immunotoxic effects. Overall, there is a relatively small body of evidence from human studies that suggests exposure to methylmercury can result in immunotoxic effects and the NRC concluded that evidence that human exposure caused genetic damage is inconclusive. There are insufficient human data to evaluate whether these effects are consistent with levels in the U.S. population. Because the developing fetus may be the most sensitive to the effects from methylmercury, women of

[39] Studies investigating the relationship between methylmercury and cardiovascular effects have reached different conclusions. Some recent epidemiological studies of men suggest that methylmercury is associated with a higher risk of acute myocardial infarction, coronary heart disease and cardiovascular disease in some populations. Other research with less corroboration suggest that reproductive, renal, and hematological impacts may be of concern. There are insufficient human data to evalaute whether these effects are consistent with levels in the U.S. population. *See* RIA for CAMR chapter 2.

child-bearing age are regarded as the population of greatest interest when assessing methylmercury exposure.

The predominant pathway of Hg exposure to both humans and wildlife is consumption of fish. Critical elements in estimating methylmercury exposure and risk from fish consumption include the concentrations of methylmercury in the fish consumed, the quantity of fish consumed,[40] and how frequently the fish is consumed. There is a great deal of variability among individuals in fish consumption rates. However, our analysis indicates that the typical U.S. consumer eating moderate amounts of a wide variety of low-mercury fish from restaurants and grocery stores is not expected to ingest harmful levels of methylmercury from fish. Those who regularly and frequently consume large amounts of fish, or fish with higher levels of methylmercury, are more exposed. The EPA and Food and Drug Administration jointly, as well as states, have issued fish consumption advisories to inform people of ways to reduce exposure to methylmercury from fish.

As part of its long term U.S. population surveillance, the U.S. Centers for Disease Control (CDC) assessed Hg concentrations in blood of over 3,600 women of child-bearing age under the National Health and Nutrition Examination Survey (NHANES). A recent analysis of these data reported that about 6 percent of these women of child-bearing age have levels of Hg in their blood that are at or above the U.S. EPA's RfD, described below. The CDC also surveyed the same group of women about their eating habits. An analysis of 1500 of these women showed that Hg blood levels were higher in the women who reported eating three or more servings of fish in the month before they were tested. It is reasonable to conclude that methylmercury contained in seafood may be responsible for elevated levels of Hg in U.S. women of child-bearing age.[41]

As described below, the analysis supporting today's action focuses on assessing exposure from freshwater fish caught and consumed by recreational and subsistence anglers because available information indicate that U.S. utility Hg emissions may affect the methylmercury concentrations in these fish. EPA also considered the following fish consumption pathways: Consumption from commercial sources (including saltwater and freshwater fish from domestic and foreign producers); consumption of recreationally caught marine fish, consumption of recreationally caught estuarine fish; and consumption of commercial fish raised at fish farms (aquaculture). For a number of reasons, as explained in the TSD, current information does not suggest that these latter pathways present meaningful risks of ingestion of utility-attributable methylmercury.

The EPA's 1997 Mercury Study Report to Congress suggests a plausible link between anthropogenic releases of Hg from industrial and combustion sources in the U.S. and methylmercury in fish in the U.S. However, other sources of Hg emissions, including Hg from natural sources (such as volcanos) and anthropogenic emissions in other countries, contribute to the levels of methylmercury observed in fish in the U.S.[42] Our current understanding of the global Hg cycle and the impact of the anthropogenic sources allow us to make estimates on a global, continental, or regional scale of their relative importance. It is more difficult to make accurate predictions of the fluxes on a local scale given our current understanding.

We recognize that it is also difficult to quantify with precision how a specific change in air deposition of Hg leads to a change in fish tissue levels. We further recognize that the relationship between the amount of Hg emissions reduced and the attendant reduction in methlymercury fish concentrations depends upon the specific characteristics of the waterbody at issue. Nevertheless, science continues to evolve and EPA has made substantial progress in developing methods for assessing the amount of methylmercury in fish tissues that may be traced to emissions from coal-fired U.S. Utility Units. We describe our methodology below and why this methodology is sufficient to support today's action.

As discussed above, we are focusing on consumption of self-caught, freshwater fish. We estimate that there are approximately 27.9 million recreational freshwater fishers in the U.S. population, including fishers who do not eat (*e.g.,* release) their catch. Based on application of a ''consuming'' factor and a ''sharing'' factor to the estimate of recreational fishers, as discussed further in the RIA to CAMR, we estimate that approximately 58.6 million individuals in the U.S. population consume recreationally-caught freshwater fish. Of these individuals, we estimate that approximately 7.5 to 10.5 million are women of child-bearing age (that is, 15–44 years old), about 500,000 of whom are expected to give birth in any one year. We estimate that the mean recreational freshwater fish consumption rate for these women is 8 grams/day, and the 95th percentile recreational freshwater fish consumption rate is 25 grams/day. A subset of recreational freshwater fish consumers may consume at higher levels, as discussed below. In addition, subsistence fishers and fishers in certain ethnic groups are expected to have generally higher fish consumption rates than consumers of recreational freshwater fish. These sub-populations are discussed below.

*B. The Methylmercury Reference Dose*

EPA generally quantifies risk of adverse health effects other than cancer by calculating a reference value (RfV). In general, an RfV is an estimation of an exposure that is likely to be without an appreciable risk of adverse effects over a lifetime. See *http://www.epa.gov/iris/gloss8.htm.* RfVs for exposure by ingestion are called reference doses (RfD).

The EPA defines an RfD as ''an estimate (with uncertainty spanning perhaps an order of magnitude) of a daily oral exposure to the human population (including sensitive subgroups) that is likely to be without an appreciable risk of deleterious effects during a lifetime. It can be derived from a NOAEL (no observed adverse effect level), LOAEL (lowest observed adverse effect level), or benchmark dose, with uncertainty factors generally applied to reflect limitations of the data used.'' *See http://www.epa.gov/iris/gloss8.htm.*

As stated above, an RfD is derived by choosing a point of departure from animal or human data. This can be a NOAEL or LOAEL, either of which may be defined by applying statistical tests and scientific judgment to the data. When the data are sufficient, one can apply a mathematical model to obtain a benchmark dose (BMD). The BMD is the dose at which a particular level of response (*i.e.*, the benchmark response,

[40] A precise estimate of methylmercury exposure depends on quantity of fish consumed as a function of an individual's body weight.

[41] 289 JAMA 1667 (April 2, 2003).

[42] Recent Hg estimates (which are highly uncertain) of annual total global emissions from all sources (natural and anthropogenic) are about 5,000 to 5,500 tons per year (tpy). Of this total, about 1,000 tpy are estimated to be natural emissions and about 2,000 tpy are estimated to be contributions through the natural global cycle of re-emissions of Hg associated with past natural releases and anthropogenic activity. Current anthropogenic emissions account for the remaining 2,000 tpy. Given the global estimates noted above, U.S. anthropogenic Hg emissions are estimated to account for roughly 3 percent of the global total, and U.S. utilities are estimated to account for about 1 percent of total global emissions. Deposition from U.S. utilities is described in greater detail below. Utility RTC at 7–1 to 7–2; Mercury NPR, 69 FR 4657–58 (January 20, 2004); RIA for CAMR chapters 5–6.

or BMR) for some outcome of concern is found to occur. One can then derive a BMD lower confidence limit (BMDL), which is a statistical lower bound on the chosen BMD, an exposure expected to produce a specified effect in some defined percentage of a test population.

The point of departure (again, NOAEL, LOAEL, or BMDL) is divided by uncertainty/variability factors to arrive at the RfD. The uncertainty factors are intended to account for variability and uncertainty in the data. The size of an uncertainty/variability factor is determined by the adequacy or limitations of the data and is typically either 10 or 3 for each type of variabilty. For example, uncertainty factors may be employed for extrapolating from animals to humans, variability in human susceptibility (sensitive populations), and extrapolating from subchronic to chronic exposures. The resulting RfD is believed to be the amount of a chemical which, when ingested daily over a lifetime, is likely to be without an appreciable risk of deleterious effects to humans, including sensitive subpopulations.

In 2001, EPA published an RfD for methylmercury that is based on a BMD approach. This quantitative risk estimate was based on data from developmental neurotoxicity studies mentioned above; specifically, deficits in tests associated with ability to learn and process information. EPA applied an uncertainty/variability factor of 10 to the point of departure (BMDL) to derive the RfD. EPA's RfD for methylmercury is 0.1 μg/kg bw/day, which is 0.1 micrograms of Hg per day for each kilogram of a person's body weight.

As noted in the Hg Proposal, at the direction of Congress, EPA funded the NAS to perform an independent evaluation of the available data related to the health impacts of methylmercury and provide recommendations for EPA's RfD. The NAS/National Research Council (NRC) conducted an 18-month study of the available data on the health effects of methylmercury. The review by the NAS, published in July 2000, concluded that the neuro-developmental effects are the most sensitive and well-documented effects of methylmercury exposure. The NRC advised revising the basis of the RfD, which used data from a short-term exposure in Iraq, to incorporate new studies on children exposed in utero when their mothers ate seafood containing Hg. EPA subsequently established a reference dose of 0.0001 mg/kg bw/day. NAS determined that EPA's RfD ''is a scientifically justified level for the protection of public health.''

The methylmercury RfD is further described in the RIA, chapter 2 and in other EPA documents (IRIS, U.S. EPA 2001; Water Quality Criteria for the Protection of Human Health: Methylmercury, EPA–823–R–01–001). Briefly, EPA used as the point of departure BMDLs for multiple endpoints from the three studies of in utero methylmercury exposure and effects. These were conducted in the Faroes and Seychelles Islands and in New Zealand.[43] All of the endpoints were children's scores on neuropsychological tests. Consistent with NRC recommendations, an uncertainty/variability factor of 10 was used to account for pharmacokinetic and pharmacodynamic variability in the human population. In the EPA documents, one data set from the Faroes (Boston Naming Test, full cohort) is displayed for all calculations as an example of the multiple BMDLs which serve as the basis for the RfD.

In determining the RfD for methylmercury, EPA said that the ''RfD can be considered a threshold for a population at which it is unlikely that adverse effects will be observed'' (Water Quality Criteria for the Protection of Human Health: Methylmercury, EPA–823–R–01–001). The RfD was calculated to be a level ''likely to be without an appreciable risk,'' of ''deleterious effects'' for all populations, including sensitive subgroups. EPA does not further quantify the degree of risk which would be expected for exposures at or above the methylmercury RfD. This is the case for all of EPA's RfDs. Additional regulatory values support a similar threshold approach for describing risks to methylmercury exposure. For example, the World Health Organization sets the level at 0.23 μg/kg/day; Health Canada sets the level at 0.2 μg/kg/day; and the Agency for Toxic Substances and Disease Registry (ATSDR) sets a value of 0.3 μg/kg/day.

EPA has established the RfD at a level such that exposures at or below the RfD are unlikely to be associated with appreciable risk of deleterious effects. It is important to note, however, that the RfD does not define an exposure level corresponding to zero risk; exposure near or below the RfD could pose a very low level of risk which EPA deems to be non-appreciable. It is also important to note that the RfD does not define a bright line, above which individuals are at risk of adverse effects.

Further, in EPA's 1989 Residual Risk Report to Congress, we stated:

> It should be noted that exposures above an RfD or RfC do not necessarily imply unacceptable risk or that adverse health effects are expected. Because of the inherent conservatism of the RfC/RfD methodology, the significance of exceedances must be evaluated on a case-by-case basis, considering such factors as the confidence level of the assessment, the size of UF used, the slope of the dose-response curve, the magnitude of the exceedance, and the number or types of people exposed at various levels above the RfD or RfC.[44]

[43] More specifically, the subjects of the Seychelles longitudinal prospective study were 779 mother-infant pairs from a fish-eating population (Myers *et al.*, 1995a–c, 1997; Davidson *et al.*, 1995, 1998). Infants were followed from birth to 5.5 years of age, and assessed at various ages on a number of standardized neuropsychological endpoints. The independent variable was maternal-hair Hg levels. The Faroe Islands study was a longitudinal study of about 900 mother-infant pairs (Grandjean *et al.*, 1997). The main independent variable was cord-blood Hg; maternal-hair Hg was also measured. At 7 years of age, children were tested on a variety of tasks designed to assess function in specific behavioral domains. The New Zealand study was a prospective study in which 38 children of mothers with hair Hg levels during pregnancy greater than 6 ppm were matched with children whose mothers had lower hair Hg levels (Kjellstrom *et al.*, 1989, 1986). At 6 years of age, a total of 237 children were assessed on a number of neuropsychological endpoints similar to those used in the Seychelles study (Kjellstrom *et al.*, 1989). The Seychelles study yielded no statistically significant evidence of impairment related to in utero methylmercury exposure, whereas the other two studies found dose-related effects on a number of neuropsychological endpoints. In the assessment described here, an integrative analysis of all three studies was relied upon in setting the point of departure for derivation of the RfD. As noted by NRC in reference to data from the Seychelles, Faroe Islands, and New Zealand, ''because those data are epidemiological, and exposure is measured on a continuous scale, there is no generally accepted procedure for determining a dose at which no adverse effects occur.'' (NRC 2000)

[44] U.S. Environmental Protection Agency. 1989. Risk Assessment Guidance for Superfund: Volume I. Human Health Evaluation Manual (Part A). Office of Emergency and Remedial Response. Washington, DC, EPA/541/1–89/002, at 52–53 *http://www.epa.gov/oswer/riskassessment/ragsa/pdf/ch8.pdf* (Residual Risk Report). The Residual Risk Report further stated:

> It is expected that an HI (*i.e.*, hazard index (HI)), which is the sum of more than one hazard quotient for multiple substances and/or multiple exposure pathways) less than 1 that is derived using target organ specific hazard quotients would ordinarily be considered acceptable. If the HI is greater than 1, then the amount by which the HI is greater than 1, the uncertainty in the HI, the slope of the dose-response curve, and a consideration of the number of people exposed would be considered in determining whether the risk is acceptable. Evaluation of the acceptable value for an HQ (*i.e.*, hazard quotient (HQ), which is the ratio of the exposure level to a reference exposure level (*e.g.*, RfD)) or an HI of 1 also would consider the values of UFs (*i.e.*, uncertainty/variability factor (UF)), which is a default factor—generally 10-fold—used in operationally deriving the RfD or RfC from experimental data) and the confidence in the RfC that are used in the calculation of the HI. In general, it is considered that each UF is somewhat conservative; because all factors are not likely to simultaneously be at their most extreme (highest) value, a combination of several factors can lead to substantial conservatism in the final value. Larger

Continued

*C. Methylmercury Levels in Fish and the Methylmercury Water Quality Criterion*

As noted above, the most important pathway of exposure to Hg for humans is through the consumption of fish and seafood. These include saltwater fish such as tile fish, shark, and swordfish, which are most often caught commercially. They also include freshwater fish such as bass, perch, and walleye, which are often caught recreationally, commercially, or for personal consumption or distribution. Generally shellfish have lower levels of methylmercury than do finfish. The levels of Hg in fish and shellfish are variable, with mean levels ranging from non-detectable to 1.45 mg/kg, depending on species. See FDA Mercury Levels in Commercial Fish and Shellfish (*http://www.cfsan.fda.gov/~frf/sea-mehg.html*).

Methylmercury exposure is a function of how much fish is eaten (on a bodyweight basis), how frequently fish is eaten, and the methylmercury concentration in the fish. As a result, estimates of the amount and type of fish consumption are important to assessing the impacts of methylmercury attributed to coal-fired Utility Units on public health.

Hg is emitted from powerplants in three forms: Elemental Hg, reactive (oxidized) Hg, and particulate Hg. Most of the local and regional Hg deposition is associated with the emissions of reactive Hg. For this reason, the magnitude of reactive Hg emission from powerplants is critical to Hg deposition in the United States. As noted above, FGD and SCR control technologies are most effective in controlling reactive Hg emissions. As indicated by Table VI–2, roughly 90 percent of the Hg reductions under CAIR in 2020 are reactive Hg. As a result, the $SO_2$ and $NO_X$ limits established by CAIR yield significant reductions (roughly 70 percent) in reactive Hg emissions from powerplants.

Americans eat fish from a variety of sources. An individual's fish diet can be composed of commercial fish and shellfish (both imported and domestic), fish from aquaculture (or farm raised fish for commercial sale), and fish from non-commercial sources (*e.g.*, recreationally caught fish, fish caught to meet dietary needs, and/or fish caught for cultural or traditional reasons). These fish may come from marine, estuarine, or freshwater sources.

Using the 2001 RfD and information on Hg exposure routes, EPA published a recommended ambient water quality criterion for the states' and tribes' use in setting water quality standards for U.S. waters (freshwater and estuarine) that are designed to protect human health. EPA issued the methylmercury water quality criterion in 2001. Water Quality Criterion for the Protection of Human Health: Methylmercury. EPA–823–R–01–001. Office of Science and Technology, Office of Water, USEPA, Washington, DC, USEPA 2001) Because of the wide variability in methylmercury bioaccumulation among waterbodies, EPA set the criterion as a fish tissue level rather than as an ambient water concentration. The criterion is 0.3 mg/kg (milligram methylmercury per kilogram of wet-weight fish tissue). The criterion is a risk assessment number that states and authorized tribes may use in their programs for protection of designated uses.

The Clean Water Act (CWA) and EPA's regulations specify requirements for adoption of water quality criteria. States and authorized tribes must adopt water quality criteria that protect designated uses. See CWA section 303(c)(2)(A). Water quality criteria must be based on a sound scientific rationale and must contain sufficient parameters or components to protect the designated uses. See 40 CFR 131.11. States and authorized tribes must adopt criteria for all toxic pollutants where EPA has established ambient water quality criteria where the discharge or presence of these pollutants could reasonably interfere with the designated uses. See CWA Section 303(c)(2)(B). EPA issued guidance on how states and authorized tribes may comply with section 303(c)(2)(B) which is now contained in the *Water Quality Standards Handbook: Second Edition* (EPA, 1994). States and authorized tribes that decide to use the recommended methylmercury criterion as the basis for new or revised methylmercury water quality standards have the option of adopting the criterion as a fish tissue concentration into their water quality standards, adjusting the criterion to account for state or local exposure, or adopting it as a traditional water column concentration. States and authorized tribes remain free not to use EPA's current recommendations, provided that their new or revised water quality criteria for methylmercury protect the designated uses and are based on a scientifically defensible methodology.

The methylmercury water quality criterion incorporated the RfD, data on freshwater and estuarine finfish and shellfish consumption for the target population (the adult general population), and information on exposure to methylmercury as a result of consumption of marine fish (for methylmercury, exposure from any route other than eating fish is negligible). Specifically, EPA assumed a default intake of freshwater and estuarine and marine finfish and shellfish of 17.5 grams per day (or two 8-ounce meals a month) conforming to EPA's methodology. (EPA; ''Methodology for Deriving Ambient Water Quality Criteria for the Protection of Human Health (2000),'' EPA–822–B–00–004 (October 2000) (''2000 Water Quality Criteria Methodology'')). This default (to be used by EPA for national criteria or others in the absence of data specific to a waterbody) is the 90th percentile total (commercial and non-commercial) freshwater and estuarine finfish and shellfish consumption reported by adults, both consumers and non-consumers. The source of this data is the 1994–1996 Continuing Study of Food Intake by Individuals (CSFII). This is a large ongoing U.S. food consumption survey conducted by USDA.

In addition, in accordance with EPA's published methodology, in developing the criterion, EPA used a relative source contribution (RSC) approach to apportion the RfD to ensure that the water quality criterion is protective, given other sources of exposure. The RSC approach apportions the RfD according to routes of exposures; for methylmercury this adjustment was done to account for marine fish consumption, as the criterion is for freshwater and estuarine finfish and shellfish. In deriving the methylmercury water quality criterion, EPA assumed an exposure to methylmercury in marine fish that is equivalent to 27 percent of RfD. That is, EPA developed the criterion so that it would be protective even if an individual is consuming typical amounts of fish from other sources (*i.e.*, marine fish).

*D. EPA's Methodology for Assessing Methylmercury Levels in Fish Tissues*

To estimate methylmercury levels, including methylmercury attributable to Utility Units, in consumed freshwater fish, EPA's analysis relied primarily on monitoring data (*i.e.*, fish tissue samples collected from freshwater sites across the study area). EPA used sources of national-level monitored Hg data. The

composite UF lead to more conservative RfC. Conversely, lower composite UF are less conservative and usually indicate a higher level of confidence in the RfC. Intermediate UF values or a mixture of high and low UF would require an examination of the relative contribution of various chemicals to the HI. Thus, an HI or HQ greater than 1 may be considered acceptable based on consideration of other factors.

*Id.* at 125.

National Listing of Fish and Wildlife Advisories (NLFA), which is maintained by EPA, contains data from over 80,000 fish tissue samples across the U.S. In addition to the NLFA, EPA's National Fish Tissue Survey (NFTS) provides useful data. Conducted in 2000–2003, this dataset includes fish tissue samples from 500 randomly selected lakes and reservoirs across the U.S. EPA considers these combined two data sets to be sufficiently comprehensive and sufficiently inclusive of the waterbodies of highest exposure for use in EPA's regional analysis, although, as discussed in the TSD, for certain areas of the country, gaps in the datasets have led EPA to rely on overall regional trends to draw conclusions for local areas.

The NLFA is the most extensive available source of fish tissue sampling data for Hg. It currently includes fish tissue contaminant data collected by states (and submitted to EPA) from over 10,000 locations nationwide, with most of the locations in the eastern half of the U.S. In general, the States historically sampled waterbodies in areas of suspected contamination. More recently, states have also focused sampling efforts on areas of elevated fishing pressure. Almost all of the tissue samples include tests for Hg. The NLFA includes roughly 83,000 Hg samples collected in the U.S. between 1967 and 2002. In the dataset, most samples are described according to the sample location, sample date, measured Hg concentration, species and size of fish, and the part of the fish sampled.

Based on the geographic coordinates provided in the NLFA database, EPA also defined two additional fields for each Hg sample:

—The eight-digit watershed (hydrological unit code (HUC) (discussed below)) in which the sample was located; and

—The type of waterbody (*i.e.*, lake or river/stream) from which the sample was taken.

The HUC, developed by the USGS, spatially delineates watersheds throughout the United States. Hydrologic units are available at four levels of aggregation, ranging from a two-digit regional level (21 units nationwide) to the eight-digit HUC (2,150 distinct units). The eight-digit HUC-level designation is useful for this analysis because it provides a nationally consistent approach for grouping waterbodies on a ''local'' scale (the average HUC area is 1,631 sq mi).[45]

We made the water body type assignments using proximity analysis in ArcINFO. Each sampling site was assigned to either a flowing (*e.g.*, river, stream) or a stationary (*e.g.*, lake, reservoir) waterbody, according the type of waterbody most closely located to the site's lat/long coordinates. We used National Hydrology Dataset (NHD) in the proximity analysis.

For purposes of the modeling described below, we restricted the samples selected from the NLFA data to those that met the following criteria:

- Collected after 1999;
- Sampled from freshwater species (*i.e.*, saltwater species are excluded from the analysis); and
- Sampled from freshwater (rather than estuarine or coastal) waterbodies.

These NLFA Hg sampling data were supplemented with additional observations from EPA's National Fish Tissue Survey (NFTS). Compiled in 2000–2003, this dataset includes fish tissue samples from 500 randomly selected lakes and reservoirs across the U.S. Combining data from NLFA and NFTS, samples from 1633 lake and river sampling sites were selected for the analysis.

Although the NLFA and NFTS provide rich sources of data on Hg levels in freshwater fish for the study area, the fish tissue samples in these databases vary in several respects. For example, they vary according to the size and species of fish sampled and according to the sampling method used (*e.g.*, the cut of fish sampled). We limited the samples we used for this analysis to fish likely to be caught and consumed, defined for this analysis as fish greater than or equal to seven inches in length.

The TSD describes in more detail how we used the data available in the NLFA and NFTS datasets.

### *E. Air Quality Modeling of the Impacts of Utility Unit Hg on Fish Tissue Levels*

EPA conducted computerized modeling that indicates the effects of various scenarios for Utility Unit Hg emissions on fish tissue at the NLFA–NFTS sites across the country, in both a 2001 base case and in projected control cases for the year 2020. This section summarizes the emissions inventories used in those modeling scenarios, and the air quality modeling, that serve as the basis for determining the fish tissue impacts of Hg from Utility Units at various levels of emissions.

EPA used a sophisticated air quality model to estimate baseline and post-control annual total Hg deposition for each scenario. EPA then combined the estimated changes in Hg depositions with fish tissue data to determine estimated changes in methylmercury levels in fish tissues. EPA then combined those changes in fish tissue methylmercury levels with estimates of fish consumption, for use in estimating exposure levels.

#### 1. Air Quality Modeling for Hg Deposition From Utility Mercury Emissions

This section summarizes the methods for estimating Hg deposition for 2001 and 2020 base cases and control scenarios. EPA estimated the Hg deposition changes using national-scale applications of the Community Multi-Scale Air Quality (CMAQ) model in the contiguous United States.

a. CMAQ Model and Hg Deposition Estimates. CMAQ is a three-dimensional grid-based Eulerian air quality model designed to estimate annual particulate concentrations and Hg deposition over large spatial scales (*e.g.*, over the contiguous United States). Because it accounts for spatial and temporal variations as well as differences in the reactivity of emissions, CMAQ is useful for evaluating the impacts of changes in utility Hg emissions, under various scenarios, on U.S. Hg deposition. Our analysis applies the modeling system to the entire United States for the following emissions scenarios:

(1) A 2001 base year;

(2) A 2001 base year of utility Hg emissions only;

(3) A 2020 projection that includes utility Hg emissions as reduced through implementation of CAIR;

(4) A 2020 projection with utility Hg emissions zeroed-out;[46]

(5) A 2020 projection that includes utility Hg emissions as reduced through implementation of CAMR (which, in turn, reflects both CAIR reductions and the reductions from the additional, 2018 controls); and

(6) A 2020 projection that includes utility Hg emissions as reduced through a second CAMR option (this second CAMR option reflects both CAIR reductions and a set of additional reductions that are tighter than the ones adopted in CAMR).

The CMAQ version 4.3 was employed for this CAMR modeling analysis. This version reflects updates in a number of areas to improve performance and address comments from the peer review. CMAQ simulates every hour of every day of the year and, thus, requires a

[45] More information regarding these hydrological units can be found through the USGS Web site *http://water.usgs.gov/GIS/huc.html.*

[46] The reference to ''zeroed out'' means that the modeled inventory did not include any amount of Hg emissions from utilities. This ''zero-out'' technique allows focus on the impact of the utilities alone.

variety of input files that contain information pertaining to the modeling domain and simulation period. These include hourly emissions estimates and meteorological data in every grid cell, as well as a set of pollutant concentrations to initialize the model and to specify concentrations along the modeling domain boundaries. These initial and boundary concentrations were obtained from output of a global chemistry model. We use the model predictions in a relative sense by first determining the ratio of Hg deposition predictions. The calculated relative change is then combined with the corresponding fish tissue concentration data to project fish tissue concentrations for the future case scenarios.

b. Modeling Domain and Simulation Periods. The modeling domain encompasses the lower 48 States and extends from 126 degrees to 66 degrees west longitude and from 24 degrees north latitude to 52 degrees north latitude. The modeling domain is segmented into rectangular blocks referred to as grid cells. The model actually predicts pollutant concentrations for each of these grid cells. For this application, the horizontal grid cells are roughly 36 km by 36 km. In addition, the modeling domain contains 14 vertical layers with the top of the modeling domain at about 16,200 meters. Within the domain each vertical layer has 16,576 grid cells.

The simulation periods modeled by CMAQ included separate full-year application for each of the emissions scenarios modeled.

c. Model Inputs. CMAQ requires a variety of input files that contain information pertaining to the modeling domain and simulation period. These include gridded, hourly emissions estimates and meteorological data and initial and boundary conditions. Separate emissions inventories were prepared for the 2001 base year and each of the future-year base cases and control scenarios. All other inputs were specified for the 2001 base year model application and remained unchanged for each future-year modeling scenario.

CMAQ requires detailed emissions inventories containing temporally allocated emissions for each grid cell in the modeling domain for each species being simulated. The previously described annual emission inventories were preprocessed into model-ready inputs through the emissions preprocessing system. Details of the preprocessing of emissions are provided in the Clean Air Interstate Rule Emissions Inventory Technical Support Document (Emissions Inventory TSD). Meteorological inputs reflecting 2001 conditions across the contiguous United States were derived from version 5 of the Mesoscale Model (MM5). These inputs include horizontal wind components (*i.e.*, speed and direction), temperature, moisture, vertical diffusion rates, and rainfall rates for each grid cell in each vertical layer.

The lateral boundary and initial species concentrations are provided by a three-dimensional global atmospheric chemistry and transport model (GEOS-CHEM). The lateral boundary species concentrations varied with height and time (every 3 hours). Terrain elevations and land use information were obtained from the U.S. Geological Survey database at 10 km resolution and aggregated to the roughly 36 km horizontal resolution used for this CMAQ application.

d. CMAQ Model Evaluation. An operational model performance evaluation for Hg wet deposition for 2001 was performed to estimate the ability of the CMAQ modeling system to replicate base-year wet deposition of Hg. Because measurements for the dry deposition of Hg do not currently exist, the modeled dry deposition performance could not be evaluated. The wet deposition evaluation principally comprises statistical assessments of model versus observed pairs that were paired in time and space on a weekly basis. This evaluation includes comparisons of model predictions to the corresponding weekly measurements from the Mercury Deposition Network (MDN).

As discussed in the TSD, in EPA's view, CMAQ model performance for wet deposition shows very good agreement with the MDN monitoring sites with an underprediction bias well within accepted performance criteria. It should be noted that the application of a sophisticated photochemical grid model like CMAQ has been demonstrated to be appropriate to support national and regional assessments of control strategies on atmospheric concentrations such as today's rule. Therefore, for purposes of assessing impacts on regional patterns of Hg deposition, we aggregate individual CMAQ grids to watersheds.

2. Emission Inventories and Estimated EGU (Utility Unit) Emission Reductions

As discussed in the Clean Air Mercury Rule Emission Inventory Technical Memorandum, EPA developed 2001 and 2020 Hg emission inventories for the air quality modeling. EPA relied on the 2001 Hg emission inventory as the base case. The base case consists of the level of Hg emissions, including Utility Unit emissions reduced by controls implemented for purposes of the acid deposition provisions and for other purposes, before reductions under CAIR (required under CAA section 110(a)(2)(D)) or CAMR (required under section 111). For comparison purposes, EPA also conducted an air quality modeling run of the 2001 Hg emissions inventories with Utility Units' Hg emissions ''zeroed out.'' EPA relied on the Integrated Planning Model (IPM), discussed below, to develop projections of EGU emissions for 2020. The 2020 utility Hg emission inventories reflect reductions under various control scenarios.

a. Use of IPM for Estimating Utility Unit Emissions. EPA projected future Hg emissions from the power generation sector using the IPM. The EPA uses IPM to analyze the projected impact of environmental policies on the electric power sector in the 48 contiguous states and the District of Columbia.

IPM is a multi-regional, dynamic, deterministic linear programming model of the U.S. electric power sector. The EPA used IPM to project both the national level and the unit level of Utility Unit Hg emissions under different control scenarios. The EPA also used IPM to project the costs of those controls.

As noted elsewhere, the CAIR $SO_2$ and $NO_X$ controls provide the basis for reducing Hg to the CAIR co-benefit levels in 2010 and 2020. EPA assumed that states would choose to implement the CAIR-required $SO_2$ and $NO_X$ reductions by controlling Utility Units, and by doing so through the EPA-administered cap-and-trade program. This assumption is reasonable, for present purposes, because of the cost-savings associated with the cap-and-trade program.

EPA used IPM to project the distribution within the utility industry of the emission controls to comply with CAIR. EPA then was able to use IPM to project the amount, and geographic distribution, of Hg emissions that would result from implementation of those CAIR-required emissions controls. In addition, EPA used IPM to project the geographic distribution of the additional emissions controls under section 111, and the associated costs.

In these IPM runs, EPA assumed that states would implement the Hg requirements through the Hg cap-and-trade program that EPA is establishing. EPA further assumed that the States would implement the additional reductions under section 111, beginning in 2010, through the same cap-and-trade program. The cap-and-trade program is implemented in two phases, with a cap

of 38 tons in 2010 (set at the co-benefits reduction under CAIR) and a lower cap of 15 tons in 2018. EPA modeling of section 111 projects banking of excess Hg reductions in the 2010 to 2017 timeframe for compliance with the cap in 2018 and beyond timeframe. Although states are not required to adopt the EPA-administered trading program, this program assures that those reductions will be achieved with the least cost. For that reason, EPA believes it reasonable to assume that States will adopt the program.

The National Electric Energy Data System (NEEDS) contains the generation unit records used to construct model plants that represent existing and planned/committed units in EPA modeling applications of IPM. The NEEDS includes basic geographic, operating, air emissions requirements, and other data on all the generation units that are represented by model plants in EPA's v.2.1.9 update of IPM.

The IPM uses model run years to represent the full planning horizon being modeled. That is, several years in the planning horizon are mapped into a representative model run year, enabling IPM to perform multiple year analyses while keeping the model size manageable. Although IPM reports results only for model run years, it takes into account the costs in all years in the planning horizon. In EPA's v.2.1.9 update of IPM, the years 2008 through 2012 are mapped to run year 2010, and the years 2013 through 2017 are mapped to run year 2015, and the years 2018 through 2022 are mapped to 2020.[47] Model outputs for 2009 and 2010 are from the 2010 run year. More detail on IPM can be found in the model documentation in the docket or at *http://www.epa.gov/airmarkets/epa-ipm* and more discussion of modeled scenarios can be found in the Regulatory Impact Assessment for CAIR and CAMR in the docket.

IPM has been used for evaluating the economic and emission impacts of environmental policies for over a decade. The model's base case incorporates title IV of the Clean Air Act (the Acid Rain Program), the $NO_X$ SIP Call, various New Source Review (NSR) settlements, and several state rules affecting emissions of $SO_2$ and $NO_X$ that were finalized prior to April of 2004. The NSR settlements include agreements between EPA and certain utilities. IPM also includes various current and future state programs in Connecticut, Illinois, Maine, Massachusetts, Minnesota, New Hampshire, North Carolina, New York, Oregon, Texas, and Wisconsin. IPM includes state rules that have been finalized and/or approved by a state's legislature or environmental agency. The base case is used to provide a reference point to compare environmental policies and assess their impacts and does not reflect a future scenario that EPA predicts will occur.

EPA's modeling is based on various input assumptions that are uncertain, particularly assumptions for Hg control technology, future fuel prices and electricity demand growth. While IPM contains an assumption of 90% Hg removal for ACI and, for modeling convenience, does not constrain the timeframe for the availability of technology, this should not be interpreted as implying any assessment of the availability of technology. For further discussion of the availability of Hg technology, see EPA's Office of Research and Development (ORD) Control of Emissions from Coal-Fired Electric Utility Boilers: An Update, EPA/Office of Research and Development, March 2005, in CAMR docket. There may also be technologies available for $SO_2$ and $NO_X$ control that are not accounted for in IPM. Therefore the technologies that plants may use to comply with this program may not be accurately projected by IPM in all cases. These and other assumptions and uncertainties are discussed further in the RIA for CAIR and CAMR in the docket. More detail on IPM can be found in the model documentation, which provides additional information on the assumptions discussed here as well as all other assumptions and inputs to the model (see docket or *http://www.epa.gov/airmarkets/epa-ipm*).

b. Emission Estimates. The emission sources and the basis for current and future-year inventories are listed in Table VI–1. Table VI–2 summarizes the Hg emissions and the change in the emissions from EGUs (Utility Units) that we expect to result under the various EGU control scenarios (under CAIR and CAMR) that we used in modeling deposition changes.

TABLE VI—1. EMISSION SOURCES AND BASIS FOR CURRENT AND FUTURE-YEAR MERCURY INVENTORIES

| Sector | Emissions source | 2001 Base year | Future-year base case projections |
|---|---|---|---|
| EGU | Power industry electric generating units (EGUs). | 1999 National Emission Inventory (NEI) data. | Integrated Planning Model (IPM). |
| Non-EGU point sources | Non-Utility Point | 1999 NEI, with medical waste incinerator sources replaced with draft 2002 NEI. | (1) Department of Energy (DOE) fuel use projections, (2) Regional Economic Model, Inc. (REMI) Policy Insight® model, (3) decreases to REMI results based on trade associations, Bureau of Labor Statistics (BLS) projections and Bureau of Economic Analysis (BEA) historical growth from 1987 to 2002, (4) Maximum Achievable Control Technology category growth and control assumptions. |
| Non-point | All other stationary sources inventoried at the county level. | 1999 NEI, with medical waste incinerator sources replaced with draft 2002 NEI. | Same as above. |

This table documents only the sources of data for the U.S. inventory. The sources of data used for Canada and Mexico are explained in the technical support memorandum and were held constant from the base year to the future years.

[47] An exception was made to the run year mapping for an IPM sensitivity run that examined the impact of a $NO_X$ Early Reduction Pool (ERP). In that run the years 2009 through 2012 were mapped to 2010 and 2008 was mapped to 2008.

TABLE VI—2. SUMMARY OF MODELED MERCURY EMISSIONS FOR CLEAN AIR MERCURY RULE

| | Elemental mercury | Reactive gaseous mercury | Particulate mercury | Total mercury |
|---|---|---|---|---|
| **2001 Base Case Emissions (tons)** | | | | |
| EGU Sources | 26.26 | 20.58 | 1.73 | 48.57 |
| Non-EGU Point Sources | 37.85 | 13.33 | 7.60 | 58.78 |
| Area Sources | 5.05 | 1.53 | 0.96 | 7.54 |
| All Sources | 69.16 | 35.44 | 10.29 | 114.89 |
| **2001 Utility Mercury Emissions Zero-Out (tons)** | | | | |
| EGU Sources | 0.00 | 0.00 | 0.00 | 0.00 |
| Non-EGU Point Sources | 37.85 | 13.33 | 7.60 | 58.78 |
| Area Sources | 5.05 | 1.53 | 0.96 | 7.54 |
| All Sources | 42.90 | 14.86 | 8.56 | 66.32 |
| **2020 With CAIR Emissions (tons)** | | | | |
| EGU Sources | 25.72 | 7.87 | 0.83 | 34.42 |
| Non-EGU Point Sources | 28.03 | 10.37 | 6.61 | 45.01 |
| Area Sources | 5.69 | 1.30 | 0.77 | 7.76 |
| All Sources | 59.44 | 19.54 | 8.21 | 87.19 |
| **2020 With CAIR Utility Mercury Emissions Zero-Out** | | | | |
| EGU Sources | 0.00 | 0.00 | 0.00 | 0.00 |
| Non-EGU Point Sources | 28.03 | 10.37 | 6.61 | 45.01 |
| Area Sources | 5.69 | 1.30 | 0.77 | 7.76 |
| All Sources | 33.72 | 11.67 | 7.38 | 52.77 |
| **2020 With CAIR and CAMR** | | | | |
| EGU Sources | 17.65 | 6.57 | 0.83 | 25.05 |
| Non-EGU Point Sources | 28.03 | 10.37 | 6.61 | 45.01 |
| Area Sources | 5.69 | 1.30 | 0.77 | 7.76 |
| All Sources | 51.37 | 18.24 | 8.21 | 77.82 |
| **2020 With CAIR and Alternative CAMR Control Option** | | | | |
| EGU Sources | 14.33 | 5.71 | 0.79 | 20.83 |
| Non-EGU Point Sources | 28.03 | 10.37 | 6.61 | 45.01 |
| Area Sources | 5.69 | 1.30 | 0.77 | 7.76 |
| All Sources | 48.05 | 17.38 | 8.17 | 73.60 |

(**Note:** ''Reactive Gaseous Mercury'' refers to oxidized mercury).

(**Note:** Table IV–2 includes projections for all EGUs, including other fossil-fired units, and coal-fired units that are less than 25 MW.)

c. Projected Hg Emissions. Table VI–3 provides projected total Hg emissions levels in 2010, 2015, and 2020. Because of the banking of excess emissions reductions under the first phase of the Hg program, emissions in the second phase will be initially higher than the caps that are required under CAMR.

TABLE VI—3. PROJECTED EMISSIONS OF HG WITH THE BASE CASE [a] (NO FURTHER CONTROLS), WITH CAIR, AND WITH SECTION 111 CONTROLS

[Tons]

| | 2010 | 2015 | 2020 |
|---|---|---|---|
| Base Case | 46.6 | 45.0 | 46.2 |
| CAIR | 38.0 | 34.4 | 34.0 |
| CAMR | 31.3 | 27.9 | 24.3 |
| Alternative CAMR Control Option | 30.9 | 25.7 | 20.1 |

[a] Base case includes Title IV Acid Rain Program, $NO_X$ SIP Call, and state rules finalized before March 2004.
*Source:* Integrated Planning Model run by EPA.

Emissions projections are presented for affected coal-fired units.

(**Note:** Table VI–3 includes projections for all affected units, *i.e.*, coal-fired units greater than 25 MW.)

3. Effect of Reductions in Utility Unit Hg Emissions on Regional Patterns of Mercury Deposition and Fish Tissue Methylmercury Concentrations

EPA uses CMAQ to predict the effect of the various control scenarios on Hg deposition attributable to Utility Units within the 48 contiguous states. By averaging the 36 km CMAQ gridded deposition estimates to the watershed (*i.e.*, HUC–8) level, EPA is able to estimate the effectiveness of reductions in utility Hg emissions in achieving reductions in deposition attributable solely to Utility Units. In addition, by comparing changes in Hg deposition before and after implementation of rule requirements at the geographic location of the fish tissue sample points, EPA is able to estimate the effect of reductions in Hg deposition on fish tissue methylmercury concentrations at the sample points.

EPA generates these changes in Hg deposition by comparing two air modeling scenarios (*e.g.*, a control scenario versus a baseline scenario for a particular simulation year). EPA then translates these changes in Hg deposition into changes in methylmercury fish tissue concentrations based on a proportionality assumption: *i.e.*, an incremental percent change in deposition produces a matching percentage change in Hg fish tissue concentrations.[48]

EPA is able to use these modeled changes in methylmercury fish tissue concentrations, together with information about fish consumption, to predict changes in population-level Hg exposure. These exposure changes reveal the extent to which reductions in Utility Unit Hg emissions, and the extent to which remaining Utility Unit Hg emissions, affect public health.

*F. Fish Tissue Levels of Methylmercury Modeled To Result After Implementation of CAIR and CAMR*

This section describes the amounts of Utility Unit attributable Hg deposition onto watersheds (termed HUC), as well as the Utility-attributable methylmercury in fish tissue, all under the various control scenarios modeled.

1. Utility-Attributable Hg Deposition Patterns

The air quality modeling shows that total Hg deposition is not highly impacted by utility deposition. The small size of this impact is evident when utility emissions are, in effect, zeroed out in the 2001 base case. The following tables summarize impacts on total Hg deposition and Hg deposition attributable to Utility Units.

TABLE VI–4.—SUMMARY STATISTICS FOR TOTAL HG DEPOSITION

[Aggregated to the HUC–8 level]

| | 2001 Base case | 2001 Utility zero out | 2020 Base case (with CAIR) | 2020 Utility zero out | 2020 CAMR requirements | 2020 CAMR alternative |
|---|---|---|---|---|---|---|
| Minimum | 6.94 | 6.94 | 6.08 | 5.90 | 6.08 | 6.07 |
| Maximum | 54.54 | 54.38 | 62.76 | 62.72 | 62.76 | 62.75 |
| 50th percentile | 15.92 | 14.60 | 14.59 | 13.92 | 14.44 | 14.39 |
| 90th percentile | 22.16 | 19.48 | 19.46 | 19.04 | 19.37 | 19.33 |
| 99th percentile | 32.35 | 27.20 | 29.15 | 28.93 | 28.96 | 28.95 |

(All units are expressed in micrograms per square meters.)

TABLE VI–5. SUMMARY STATISTICS FOR UTILITY ATTRIBUTABLE HG DEPOSITION

[aggregated to the HUC–8 level]

| | 2001 Base case | 2020 Base case (with CAMR) | 2020 CAMR Requirements | 2020 CAMR Alternative |
|---|---|---|---|---|
| Minimum | 0.00 | 0.00 | 0.00 | 0.00 |
| Maximum | 19.71 | 4.03 | 3.85 | 3.80 |
| 50th percentile | 0.39 | 0.3 | 10.26 | 0.22 |
| 90th percentile | 4.08 | 1.38 | 1.16 | 0.99 |
| 99th percentile | 10.15 | 2.56 | 2.17 | 2.04 |

(All units are expressed in micrograms per square meters.)

The median deposition level is reduced by only 8 percent when utilities emissions are zeroed out in 2001, suggesting that utilities are not a major source of Hg deposition in most HUCs. Even so, at HUCs with the highest deposition levels, zeroing out utilities reduces the 99th percentile deposition level by 16 percent, suggesting that there are relatively larger impacts of utilities in high deposition areas.

By 2020, after implementation of CAIR, significant reductions in deposition attributable to utilities occurs. HUCs with high levels of utility deposition receive a larger reduction in Utility-attributable Hg deposition relative to HUCs with a relatively small level of Utility-attributable deposition. Specifically, CAIR results in a 75 percent reduction in the 99th percentile of Utility-attributable deposition, and a 20 percent reduction in the 50th percentile. CAIR also shifts the distribution of utility-attributable deposition. In the 2001 base case, 10 percent of HUCs had greater than 20 percent of deposition attributable to utilities. In the 2020 post-CAIR base case, no HUCs had greater than 20 percent of deposition attributable to utilities, and 90 percent had less than 9 percent of deposition attributable to utilities.

[48] US EPA, 2001. Mercury Maps: A Quantitative Spatial Link Between Air Deposition and Fish Tissue: Peer Reviewed Final Report. EPA–823–R–01–009. Mercury Maps is discussed at length in the TSD.

Additional reductions in Hg emissions due to the CAMR requirements result in relatively small additional shifts in the distribution of deposition. Additional emissions reductions due to the CAMR requirements result in a small additional reduction in the number of HUCs with a high percentage of utility-attributable emissions. (The incremental impact of the CAMR alternative relative to the promulgated CAMR requirements is very small.)

2. EGU-Attributable Methylmercury Fish Tissue Levels

The following tables summarize the methylmercury fish tissue levels associated with the various Utility Unit Hg emissions scenarios. All units refer to mg (of methylmercury) per kg (fish tissue), or parts per million (ppm). As a frame of reference, it should be noted that EPA's default water quality criterion is 0.3 mg/kg.

TABLE VI—6. SUMMARY STATISTICS FOR TOTAL FISH TISSUE METHYLMERCURY

[Sample locations]

| | 2001 Base case | 2001 Utility zero out | 2020 Base case CAIR | 2020 Zero out | 2020 CAMR requirements | 2020 CAMR alternative |
|---|---|---|---|---|---|---|
| Minimum | 0.00 | 0.00 | 0.00 | 0.00 | 0.00 | 0.00 |
| Maximum | 4.49 | 3.64 | 3.65 | 3.46 | 3.63 | 3.61 |
| 50th percentile | 0.25 | 0.21 | 0.21 | 0.20 | 0.21 | 0.21 |
| 90th percentile | 0.90 | 0.81 | 0.79 | 0.77 | 0.79 | 0.78 |
| 99th percentile | 1.80 | 1.65 | 1.64 | 1.57 | 1.63 | 1.63 |

(All units are in mg methylmercury per kg fish tissue.)

TABLE VI—7. SUMMARY STATISTICS FOR UTILITY ATTRIBUTABLE FISH TISSUE METHYLMERCURY

[Across sampling locations]

| | 2001 Base | 2020 (with CAIR) | 2020 CAMR Requirements | 2020 CAMR Alternative |
|---|---|---|---|---|
| Minimum | 0.00 | 0.00 | 0.00 | 0.00 |
| Maximum | 0.85 | 0.25 | 0.19 | 0.18 |
| 50th percentile | 0.03 | 0.01 | 0.01 | 0.01 |
| 90th percentile | 0.11 | 0.03 | 0.03 | 0.03 |
| 99th percentile | 0.26 | 0.10 | 0.09 | 0.08 |

(All units are in mg methylmercury per kg fish tissue.)

a. 2001 Base case and 2001 Utility Zero-out. In the 2001 base case, as a result of all international and U.S. emissions, and before U.S. utilities implement reductions from CAIR or CAMR, the 50th percentile of the sample points had an estimated methylmercury fish tissue concentration of 0.25 mg/kg. The 90th percentile water body had an estimated methylmercury fish tissue concentration of 0.90 mg/kg, and the 99th percentile had 1.80 mg/kg.

The amount of methylmercury attributable solely to utilities in the 2001 base case, which becomes evident when utilities are zeroed out, is of course much smaller. The 50th percentile of the sample points had an estimated methylmercury fish tissue concentration. attributable solely to utilities, of 0.03 mg/kg. The 90th percentile had 0.11 mg/kg, the 99th percentile had 0.26 mg/kg, and the maximum individual sample point had 0.85 mg/kg.

It should be recalled that EPA recommends the water quality criterion of 0.3 mg/kg as a level that, given fish consumption at the 90th percentile level, would result in exposure levels below the RfD. For present purposes, EPA does not consider the water quality criterion of 0.3 mg/kg as a bright-line test for evaluating fish tissue methylmercury levels attributable to U.S. Utility Units. Rather, the criterion serves as establishing a broad frame of reference, that serves to place into context both the overall methylmercury fish tissue levels (which are attributable to methylmercury from all sources) and the methylmercury levels attributable to Utility Units.

These results indicate the relatively small percentage of U.S. utility contribution to U.S. fish tissue methylmercury levels.

b. 2020: Utilities With CAIR Reductions. EPA's modeling shows that in 2020, as a result of all international and U.S. emissions, and with U.S. utilities implementing reductions from CAIR (but not CAMR), the 50th percentile of the sample points is projected to have a methylmercury fish tissue concentration of 0.21 mg/kg. The 90th percentile is projected to have 0.79 mg/kg, and the 99th percentile is projected to have 1.64 mg/kg.

The amount of methylmercury in fish attributable solely to utilities in 2020, after implementation of the CAIR reductions (but, again, before CAMR), of course is smaller. The 50th percentile of the sample points is projected to have fish tissue concentration, attributable solely to utilities of 0.01 mg/kg. The 90th percentile is projected to have 0.03 mg/kg, the 99th percentile is projected to have 0.10 mg/kg, and the maximum individual sample point (*i.e.*, the one with the highest methylmercury levels) is projected to have 0.25 mg/kg.

Again, using the 0.3 mg/kg methylmercury water quality criterion as a broad frame of reference serving to place in context both the overall methylmercury fish tissue levels (attributable to methylmercury from all sources) and the methylmercury fish tissue levels attributable to Utility Units, it is clear that the latter levels, following implementation of CAIR, are low.

c. 2020: Utilities with CAMR Controls. The CAMR level of controls achieve further, albeit small, reductions in methylmercury fish tissue concentrations. Compared to the CAIR controls, the CAMR controls would further reduce, in 2020, methylmercury fish tissue concentrations by, in the 99th percentile, 0.01 mg/kg.

d. 2020: Utilities with Alternative CAMR Controls. EPA evaluated, but did not adopt, a slightly tighter level of CAMR controls. These alternative

CAMR controls would have achieved still further, albeit, again small, reductions in Hg deposition and in fish tissue methylmercury levels. Compared to the CAIR controls, these alternative CAMR controls would reduce methylmercury fish tissue levels in 2020 by, in the 99th percentile, 0.02 mg/kg.[49]

5. Overall Impact of CAIR and CAMR Controls on Utility Unit Hg Emissions

As described in the CAIR rule, CAIR reduces EGU Hg emissions from pre-CAIR levels by a substantial percentage. CAMR reduces Utility Unit Hg emissions, from CAIR levels, by 27 percent. CAMR reduces ionic Hg emissions, those that are most likely to result in local and regional deposition, by 17 percent relative to CAIR levels.

These reductions tend to occur from the largest sources. That is, the larger the source of Hg emissions, the more likely it is to implement CAIR or CAMR controls, and therefore the more likely it is to reduce its Hg emissions. More specifically, under the cap-and-trade system, the marketplace tends to direct controls to the largest emitters because those emitters can achieve the most cost-effective reductions. Compared to smaller emitters, these larger emitters have an incentive to implement more stringent controls, thereby reducing their emissions further below the level of their allowances, and thereby generating a larger number of allowances for sale to defray control costs. See ''Proposed National Emissions Standards for Hazardous Air Pollutants; and in the Alternative, Proposed Standards of Performance for New and Existing Sources: Electric Utility Steam Generating Units,'' 9 FR 4652, 4702–03 (Jan. 30, 2004).

G. Exposure to Utility-Attributable Methylmercury Levels in Fish Tissue

CAIR reduces median Utility-attributable fish tissue methylmercury levels, from pre-CAIR levels, by 67 percent. CAIR reduces the 99th percentile Utility-attributable fish tissue methylmercury levels, from pre-CAIR levels, by 60 percent. CAMR reduces median Utility-attributable fish tissue methylmercury levels, from CAIR levels, by 12 percent. CAMR reduces the 99th percentile Utility-attributable fish tissue methylmercury levels, from CAIR levels, by 9 percent.

As a result of these reductions, after CAIR or CAMR, no sample site remains in which Utility-attributable, emissions cause methylmercury fish tissue levels to exceed 0.3 mg/kg (EPA's water quality criterion).

Even with these reductions, although the levels of methylmercury in fish tissues attributable to Utility Units are small, the magnitude of methylmercury exposure depends on consumption levels and the sensitivity of the individual. For purposes of assessing whether utility Hg emissions are reasonably anticipated to result in hazards to public health, we focused on evaluating utility attributable methylmercury exposures for women of childbearing age in the general U.S. population who consume non-commercial (*e.g.,* recreational) freshwater fish in U.S. waterbodies.

This section describes available information as to the consumption levels of women of child-bearing age within the population of recreational fishers who consume at typical levels, and within high-consumption sub-populations; and discusses the amounts of methylmercury that may be ingested as a result of those consumption levels.

1. General Population

We believe that only those women of childbearing age who consume noncommercially caught U.S. freshwater fish have the potential for significant exposures to utility-attributable methylmercury. As a result, our assessment of the hazards to public health focuses on those women.

2. Recreational Fishers Who Consume Fish At Typical Levels.

a. Consumption Levels. For our analysis of recreational freshwater fish consumption, EPA has determined that the sport-caught fish consumption rates for recreational freshwater fishers specified as ''recommended'' in the EPA's Exposure Factors Handbook (mean of 8 gm/day and 95th percentile of 25 gm/day), represent the most appropriate values for present purposes. These recommended values were derived based on ingestion rates from four studies conducted in Maine, Michigan, and Lake Ontario (Ebert *et al.,* 1992; Connelly *et al.,* 1996; West *et al.,* 1989; West *et al.,* 1993). These studies are suitable because they included information for annual-averaged daily intake rates for self-caught freshwater fish by all recreational fishers including consumers and non-consumers. The mean values presented in these four studies ranged from 5 to 17 gm/day, while the 95th percentile values ranged from 13 to 39 gm/day.[50]

The EPA ''recommended values'' were developed by considering the range and spread of means and 95th percent values presented in the four studies. EPA recognizes that use of mean and 95th percentile consumption rates based on these four studies may not be representative of fishing behavior in every state and that there may be regional trends in consumption that differ from the values used in this analysis. However, EPA believes that these four studies represent the best available data for developing recreational fisher ingestion rates for present purposes.

As a result, for today's purposes of evaluating the potential for health effects for consumers of recreational freshwater fish resulting from exposure to utility-attributable methylmercury, we consider both the mean of 8 gm/day consumption and the 95th percentile amount of 25 gm/day.

b. Levels of Consumption Combined with Levels of Utility-Attributable Methylmercury in Fish Tissue. As described above, fish tissue levels of Utility-attributable methylmercury, for virtually all sample points, are only a fraction of the 0.3 mg/kg (fish tissue) water quality criterion. EPA evaluated recreational fish consumers' exposure to this Utility-Attributable methylmercury by calculating the level of exposure to this methylmercury and comparing it to the RfD when background exposures are not considered. For the purposes of assessing population exposure due solely to power plants, we create an index of daily intake (IDI).The IDI is defined as the ratio of exposure due solely to power plants to an exposure of 0.1 μug/kg bw/day. The IDI is defined so that an IDI of 1 is equal to an incremental exposure equal to the RfD level, recognizing that the RfD is an absolute level, while the IDI is based on incremental exposure without regard to absolute levels. Note that an IDI value of 1 would represent an absolute exposure greater than the RfD when background exposures are considered.

At either the mean fish consumption rate of 8 gm/day or the 95th percentile fish consumption rate of 25 gm/day for recreational fish consumers discussed above, and using the 99th percentile methylmercury fish tissue concentration attributable to Utility Unit (and a typical body weight of 64 kg for women of child-bearing age), the calculated Utility-attributable methylmercury exposures are 0.013 μug/kg body weight per day and 0.04 μug/kg body weight per day, respectively. Both calculated exposures are well below the RfD of 0.1 μug/kg body weight per day (an IDI value well below 1).

[49] A detailed discussion of the control alternatives we considered and the reason for our final selection is contained in the preamble to the final CAMR.

[50] The 39 gm/day value actually represents a 96th percentile value.

EPA uses the RfD to place ingestion levels in context. The RfD level of methylmercury ingestion—0.1 µug/kg body weight—should not be considered a bright line standard above which adverse health effects occur, but rather as an aid in establishing the context for evaluating both overall methylmercury ingestion (arising from methylmercury from all sources) as well as Utility-Attributable methylmercury ingestion in light of consumption rates. Our analysis concludes that Utility Unit Hg emissions do not cause hazards to the health of the general public or higher fish consuming recreational anglers.

3. High-Level Fish Consumption Sub-Populations

Although exposure to Utility-attributable methylmercury from freshwater fish tissue is quite low for recreational fishers generally, as just described, EPA recognizes that certain sub-populations consume higher levels of U.S. freshwater fish. These populations may include a subset of recreational fishers who consume large quantities of fish, individuals who are subsistence fishers, and individuals who are part of certain ethnic groups. EPA is aware that at very high consumption levels, even relatively small concentrations of methylmercury in fish may result in exposures that exceed the RfD.

However, as described in the TSD, characterization of fish consumption rates for the highest fish consuming subpopulations (*e.g.,* Native American and other ethnic populations exhibiting subsistence-like consumption) in the context of a larger regional or national analysis is technically challenging. Peer reviewed study data on these populations is relatively limited, especially when subjected to the criteria outlined in the TSD. Many of the high consumption groups that have been studied are located near the ocean and consequently have a significant fraction of their overall exposure comprised of saltwater fish. In addition, some of these studies provide details on seasonal consumption rates, but do not integrate these rates to provide an overall mean annual-averaged consumption rate relevant to an RfD-based analysis.

Although many of these studies provide mean consumption rates, few have identified specific high-end percentile values (*e.g.,* 90th, 95th or 99th percentile consumption rates). Instead, many studies, including a number of non-peer reviewed sources, cite non-specific high-end or bounding point estimates (*e.g.,* the range of consumption rates for the Ojibwe submitted for the CAMR NODA). While these point values can be used in developing high-end bounding scenarios for evaluating risk to these groups, they do not support population-level analysis of exposure since they cannot be used to fit distributions characterizing variability in fish consumption rates across these sub-populations (as noted above, modeling of population-level exposures requires that distributions characterizing fish consumption rates across a particular population be developed).

An additional challenge in characterizing high-level fish consumption is that care needs to be taken in extrapolating study results from one group to another. This reflects the fact that high-level fish consumption is often tied to socio-cultural practices and consequently consumption rates for a study population cannot be easily transferred to other groups which may have different practices (*e.g.,* practices for one Native American tribe may not be relevant to another and consequently behavior regarding fish consumption may not be generalized).

Despite these challenges in characterizing high-level consumption, EPA has developed recommended subsistence-level fish consumption rates of 60 g/day (mean) and 170 g/day (95th percentile) (EPA, 1997, Exposure Factors Handbook). These values are based on a study of several Native American Tribes located along the Columbia River in Washington State. Although these consumption rates are specific to the tribes included in the study and reflect their particular socio-cultural practices (including seasonality and target fish species), EPA believes that this study does provide a reasonable characterization of high-consuming subsistence-like freshwater fishing behavior (EPA, 1997, Exposure Factors Handbook). Therefore, in the absence of data on local practices, EPA recommends that these consumption rates be used to model high-consuming groups in other locations. It is important to note that, as explained above, application of these subsistence consumption rates outside of the original Columbia River study area could be problematic because it would be difficult to transfer these consumption rates to a different group that might exhibit different fishing behavior. However, these recommended rates can be used to model subsistence scenarios at different locations.

Although these subsistence consumption rates are recommended by EPA, commenters (including NODA comments obtained for this rule), have identified alternative consumption rates for specific high consuming groups that are in some instances, higher than these recommended values. For example, a survey by the Great Lakes Indian Fish and Wildlife Commission (GLIFWC) (as referenced in comments to the CAMR NODA) indicates that consumption rates by members of Ojibwe Great Lakes tribes during fall spearing season may range from 155.8–240.7 g/day and may range from 189.6–292.8 g/day during the spring. EPA has reviewed these comments and does not believe that it would be appropriate to rely on them for purposes this rulemaking. First, the data has not been peer reviewed. Moreover, it is not clear from the comments how many people consume fish at those rates, to what extent those fish consumers are women of child-bearing years, and how to annualize these seasonal sales.[51]

For all the above reasons, and despite comments indicating that some subgroups may have larger short-term consumption rates, EPA believes that the Columbia River-based consumption rates of between 60 g/day (mean) and 170 g/day (95th percentile) are appropriate default values for subsistence fish consumers.

*H. EPA Concludes That Utility Hg Emissions Remaining After Imposition of Other Requirements of the Act, in Particular CAA Sections 110(a)(2)(D) and 111, Do Not Result in Hazards to Public Health*

As discussed above, Congress mandated that EPA assess hazards to public health reasonably anticipated to occur as a result of utility HAP emissions remaining after imposition of the requirements of the Act, and to regulate Utility Units under section 112 if EPA determines that such regulation is ''appropriate'' and ''necessary.'' The issue of whether the level of Hg emissions from Utility Units remaining after implementation of CAA section 110(a)(2)(D), and independently section 111, cause hazards to public health is directly relevant to our conclusion set forth in section IV.A. above, namely, that it is not appropriate to regulate coal-fired Utility Units under section 112 on the basis of Hg emissions. For the reasons discussed below, EPA concludes that the level of Hg emissions remaining after implementation of CAIR, and, independently, CAMR, which implement sections 110(a)(2)(D) and 111, respectively, do not result in hazards to public health.

1. ''Hazards to Public Health'' Under Section 112(n)(1)(A)

[51] As discussed below, the Ojibwe Great Lakes tribes do not appear to be located in areas with high utility-attributable Hg deposition.

Section 112(n)(1)(A) establishes the backdrop against which our utility ''appropriate and necessary'' determination should be judged. Again, we must decide whether we reasonably anticipate utility Hg emissions remaining after imposition of the requirements of the Act to cause hazards to public health. If they do, then we must determine whether it is appropriate and necessary to regulate Utility Units under section 112. If utility Hg emissions do not cause public health hazards, however, which indeed is what we conclude today, then it is not appropriate to regulate such emissions under section 112, and there is no need to proceed to the ''necessary'' prong of the section 112(n)(1)(A) inquiry, as explained above.

Section 112(n)(1)(A) defines neither what constitutes a ''hazard'' to public health nor what EPA's obligations would be if such hazard were identified. Therefore, we believe that EPA has wide discretion, using its technical expertise, to define ''hazards to public health,'' and to determine whether Hg emissions from utilities pose such a hazard. EPA's judgment should only be overturned if it is deemed unreasonable, not merely because other, reasonable alternatives exist. *Department of Treasury* v. *FLRA,* 494 U.S. 922, 933 (1990); *Texas Office of Public Utility Counsel* v. *FCC,* 265 F.3d 313, 320 (5th Cir. 2001).

Although section 112(n)(1)(A) does not define ''hazards to public health,'' section 112(n)(1)(C) offers guidance with respect to determining whether Hg emissions result in hazards to public health. In that section, Congress asked the National Institute of Environmental Health Sciences to conduct a study to determine the ''threshold level of mercury exposure below which adverse *human health* effects are not expected to occur.'' (Emphasis added) Congress further mandated that the study include a threshold for Hg concentrations in fish tissue which may be consumed, including consumption by *''sensitive populations''* without adverse effects on *public health.* Implicit in this direction, is that Congress was concerned, first about public health, not environmental effects. EPA has identified the exposure to Hg through consumption of contaminated fish as a pathway to human health effects, and EPA has also, in its discretion, looked at the health effects on sensitive populations.

In interpreting what ''hazards to public health'' might be reasonably anticipated under section 112(n)(1)(A), we think it is also useful to look at the DC Circuit's Vinyl Chloride decision, 824 F.2d 1146 (1987), and the analysis EPA articulated in its so-called ''benzene'' analysis, 54 FR 38044 (Sept. 14, 1989). Although the Vinyl Chloride decision and ''benzene'' analysis address the issue of how to protect public health ''with an ample margin of safety,'' and are thus more stringent than the standard established in section 112(n)(1)(A), we nevertheless believe that the general principles articulated in Vinyl Chloride and the ''benzene'' analysis are relevant to our analysis of assessing hazards to public health pursuant to section 112(n)(1)(A). Some of those key principles include: (1) ''Safe'' does not mean ''risk free,'' (Administrator is to determine what risks are acceptable in the world in which we live, where such activities as driving a car are considered generally safe notwithstanding the known risk involved), Vinyl Chloride, 824 F.2d at 1165; (2) something is '' 'unsafe' only when it threatens humans with a significant risk of harm,' '' *id.* at 1153; (3) EPA, not the courts, has the technical expertise to determine what risks are acceptable, *id.* at 1163; (4) EPA is permitted to account for uncertainty and to use ''expert discretion to determine what action should be taken in light of that uncertainty,'' *id.;* and (5) in determining what is ''safe'' or ''acceptable,'' EPA should consider a variety of factors, including: (a) Estimated risk to a maximally exposed individual (the so-called ''maximum individual risk'' or ''MIR''); (b) overall incidence of cancer or other serious health effects within the exposed population; (c) the numbers of persons exposed within each individual lifetime risk range; (d) the science policy assumptions and uncertainties associated with the risk measures; (e) weight of the scientific evidence for human health effects; and (f) other quantified or unquantified health effects. (See 54 FR at 38045–46, 38057).

In assessing whether remaining utility HAP emissions pose hazards to public health, consistent with section 112(n)(1)(C) and the above identified factors, we looked at the public's, including sensitive populations' (*i.e.,* fish consumers), exposure to methylmercury through fish consumption attributable to utilities alone. Based on this assessment, and as explained further below, EPA concludes that remaining utility HAP emissions do not pose hazards to public health.

2. CAIR and CAMR Reduce the Public's Methylmercury Exposure Due to Fish Consumption to Below the Methylmercury RfD (Below an IDI Value of 1)

As discussed above, EPA has adopted a water quality criterion for methylmercury for states to use in establishing water quality standards to protect public health. The criterion, expressed as a fish tissue concentration, of 0.3 mg/kg was derived from the methylmercury RfD (taking into account the possibility that a person may be exposed to methylmercury via commercial fish to some degree, as expressed in the RSC described elsewhere). At this level, people consuming at a high-end fish consumption rate of 17.5 grams per day would not be exposed above the methylmercury RfD. As noted above, this value represents the 90th percentile fish consumption rate.

In the base year of 2001 (*i.e.,* prior to both CAIR and CAMR), fish-tissue methylmercury concentrations at the 90th percentile, 99th percentile, and maximum (that is, the single highest concentration) levels, attributable to utilities, are 0.11, 0.27, and 0.85 mg/kg, respectively. CAIR reduces the utility-attributable methylmercury fish-tissue concentrations at the 90th percentile, 99th percentile, and maximum level to 0.03, 0.10, and 0.25 mg/kg, respectively. CAMR reduces these concentrations even further to 0.03, 0.09, and 0.19 mg/kg, respectively. These post CAIR and CAMR levels are considerably below the methylmercury water quality criterion of 0.3 mg/kg.

At all of these post-control methylmercury levels, fish consumers at the water quality criterion 90th percentile consumption level of 17.5 grams per day are well below the RfD (below an IDI value of 1). Further, these concentration values when applied to the 95th percentile consumption rate for recreational freshwater anglers identified in EPA's Exposure Factors Handbook, *i.e.,* 25 grams per day, also result in exposures below the RfD (below an IDI value of 1). As a result, it is evident that the general population (which is expected to consume less U.S. freshwater fish than recreational anglers) does not confront hazards to public health from utility-attributable methylmercury.

At the methylmercury fish tissue concentrations attributable to utilities remaining after implementation of CAIR and CAMR, it is possible that consumers eating at the subsistence-level fish consumption rates of 60 g/day (mean) and 170 g/day (95th percentile), see Exposure Factors Handbook, could exceed the RfD (an IDI value greater than 1) as a result of utility-attributable emissions if they are in fact consuming fish from the most contaminated locations. In other words, for a fish consumer to exceed the RfD (an IDI value greater than 1) as a result of utility

Hg emissions, they have to both (1) consume fish at the highest consumption rates and (2) consume fish from waterbodies with the highest levels of utility-attributable Hg fish-tissue concentrations. As discussed in the TSD, the probability of these factors converging is quite low. For example, after CAIR, the probability that a recreational angler will exceed the RfD (an IDI value greater than 1) exclusively as a result of utility Hg emissions is only 0.01 percent. After CAMR, the probability drops even lower. Our analysis further shows that even if there were a convergence of the unlikely factors of consuming at the 99th percentile consumption rates and at the 99th percentile methylmecury fish tissue concentrations, exposure would exceed the RfD by only 10 percent (an IDI value of 1.1). Exceeding the RfD by this amount (an IDI value of 1.1) does not mean that an adverse effect will occur. Indeed, 10 percent above the RfD (an IDI value of 1.1), or 0.11 μg/kg-bw/day, is below the World Health Organization's level of 0.23 μg/kg-bw/day.[52]

Consumption rates for subsistence fishers are much higher than recreational anglers. As such, these populations have a greater probability of exceeding the RfD (an IDI value greater than 1). For this to happen, the subsistence fisher still must be at the high-end of the distribution for both consumption and utility-attributable methylmercury fish tissue concentrations. Our statistical data suggest that subsistence anglers at the 99th percentile consumption rate and the 99th percentile concentration level could exceed the RfD (an IDI value greater than 1). Holding consumption rates at the 99th percentile, the subsistence angler will likely exceed the RfD (an IDI value greater than 1) at or above the 72nd percentile fish tissue concentration.

Again, the likelihood of this occurring is very small. Specific data on concentrations in fish at waterbodies frequented by subsistence fishing populations has not been generated. To get a sense of tribal location in relation to utility-attributable Hg deposition post-CAIR, we overlaid the 2000 Census data on the location of Native American populations (by census tract) on our CMAQ models. Visual inspection of the resulting map shows that the overwhelming majority of tribal populations live outside of areas most impacted by utility-attributable Hg deposition. *See* TSD. This suggests that the 99th percentile of the utility attributable methylmercury concentrations is likely inappropriate as an upper bound for Native American exposures, further reducing the probability that, post CAIR, and even more so, post CAMR, an individual Native American (who comprise a significant percent of upper-bound subsistence anglers) will exceed the RfD (an IDI value greater than 1).

As discussed above, EPA received comments on the consumption rates of certain ethnic groups that are higher than the subsistence angler consumption rate that EPA relied on for purposes of this analysis. Specifically, members of the Ojibwe Great Lakes Tribes commented that during their fall spearing season they may consume between 156 and 241 grams of fish per day, and during their spring spearing season, they may consume as much as 293 grams/day. For a number of reasons, EPA found the data to be of limited value. First, the data have not been peer reviewed and thus EPA is reluctant to rely on them for regulatory purposes. Second, commenters did not include information on annual average consumption rates or the percentage of those fish consumers that are women of childbearing age. Third, based on EPA's information, the Tribes do not reside in an area that appears to be significantly impacted by utility Hg emissions. Thus, despite having extremely high consumption rates, there are no data in the record that suggest that members of the Tribe would be exposed above the RfD (an IDI value greater than 1) as a result of utility emissions. And again, as discussed in greater detail below, exposure above the RfD does not necessarily equate to adverse effects.

3. The RfD Is An Appropriate Health Benchmark

As described in section VII.B., in general, the RfD is ''an estimate (with uncertainty spanning perhaps an order of magnitude) of a daily exposure to the human population (including sensitive subgroups) that is likely to be without an appreciable risk of deleterious effects during a lifetime.'' [53] EPA's RfD for Methylmercury is 0.1 μg/kg bw/day, which is 0.1 microgram of Hg per day for each kilogram of a person's body weight. Since the most sensitive subpopulations are factored into the RfD, its use is thought to be protective of all life stages without additional uncertainty factors or adjustments. The National Academy of Sciences (NAS) reviewed the toxicological effects of Methylmercury and concluded that ''[o]n the basis of its evaluation, the committee's consensus is that the value of EPA's current RfD for Methylmercury, 0.1 μg/kg per day, is a *scientifically justifiable level for the protection of public health.*'' [54]

EPA views the level of the RfD as establishing the overall context for assessing the health effects of ingesting utility-attributable Methylmercury. As noted above, in regulating HAPs that constitute threshold pollutants, EPA has stated that the risks associated with exposures below the RfD generally should be considered to be acceptable, and that the emissions associated with those exposures need not be regulated further under section 112.

However, the RfD should not be considered a bright line. At exposures above the RfD, ''adverse health effects are possible,'' but such exposures ''[do] not necessarily mean that adverse effects will occur.'' Indeed, the World Health Organization has concluded that a level equal to 2.3 times EPA's Methylmercury RfD is protective of human health.

4. Risks Remaining After Implementation of CAIR, and Even More So After CAMR, Are Acceptable

Applying the risk factors identified above to utility Hg emissions in the 112(n)(1)(A) context, EPA concludes that utility Hg emissions remaining after implementation of CAIR, and even more so after CAMR, do not pose unacceptable hazards to public health. The overwhelming majority of the general public and high-end fish consumers (at least through the 99th percentile of recreational anglers) are not expected to be exposed above the methylmercury RfD (an IDI value greater than 1). While the possibility exists that a very small group of people may be exposed above the RfD (an IDI value greater than 1), significant uncertainties exist with respect to the existence and

[52] The choice of an ''acceptable'' risk level is one of policy informed by science. The RfD does not represent a ''bright line'' above which individuals are at risk of significant adverse effects. Rather, it reflects a level where EPA can state with reasonable certainty that risks are not appreciable. The Agency further notes that a number of other national and international scientific bodies have assessed the health effects of Hg and have adopted levels greater than EPA's RfD. As exposure levels increase beyond the RfD, the possibility of deleterious effects increases, but the point at which they become ''unacceptable'' must be determined on a case-by-case basis. In making this determination, the Agency considers a number of factors including: (1) Confidence in the risk estimate: How certain is the scientific information supporting the link between possible health effects and exposures?; (2) the effects of concern: How serious are the health effects?; (3) the size of the population at risk, as well as the distribution of risk within the population. The Agency has considered these factors in the case of Hg and has concluded that the exposures above the IDI described elsewhere in this chapter do not constitute an unacceptable risk.

[53] *See http://www.epa.gov/iris/subst/0073.htm.*

[54] *See* NAS at page 11 (emphasis added).

actual size of such a group. There are also significant uncertainties concerning the extent to which such exposure might exceed the RfD (an IDI value greater than 1) and whether exposure at such levels would cause adverse effects. *See* TSD. EPA intends to continue to investigate the size and extent to which certain groups might be exposed above the RfD (an IDI value greater than 1), and reserves the right to revisit its risk acceptability determination if future information warrants.

In the meantime, however, given the size of the population, including sensitive subpopulations, that after implementation of CAIR and, independently, CAMR, will be below the RfD (an IDI value of less than 1); the uncertainty of the size and the level to which certain groups may be exposed above the RfD (an IDI value greater than 1); the uncertainties that adverse effects will be experienced by such groups even at levels significantly above the methylmercury RfD (an IDI value greater than 1); and the nature of those potential adverse effects (see TSD), EPA, in its expert judgment, concludes that utility Hg emissions do not pose hazards to public health, and therefore that it is not appropriate to regulate such emissions under section 112.

5. Section 112(f) ''Residual Risk'' Analysis

Some commenters have argued that, in determining whether utility HAPs pose a hazard to public health, EPA is bound to the mandates of section 112(f). In other words, some have argued that unless we can conclude that the imposition of the CAA requirements on utility HAP emissions ''provide[s] an ample margin of safety to protect public health,'' we must regulate utilities under section 112. We disagree. Section 112(n)(1)(A) governs our decision whether to regulate utilities under section 112, not 112(f). Had Congress intended us to apply the same standard, it could have used identical words to those found in section 112(f) or referenced it directly. It did not. Instead, Congress instructed EPA to assess whether utility HAP emissions cause ''hazards to public health.''

Nevertheless, as explained above, in assessing whether remaining utility HAP emissions cause ''hazards to public health,'' EPA used essentially the same analysis that it would use in assessing the human health prong of a 112(f) determination.[55] The factors laid out in the ''benzene'' analysis for assessing acceptable risk to public health under 112(f) are generally relevant to assessing hazard under 112(n)(1)(A). Thus, even if EPA were required to do a 112(f) analysis in determining whether utility Hg emissions pose public health hazards, it is very likely that the conclusion would have been the same, even if the methodology might have been slightly different.

As noted above, section 112(f) expressly incorporates EPA's pre-1990 two-part inquiry for evaluating what level of emission reduction is needed to provide an ample margin of safety to protect public health. See CAA section 112(f)(2)(B) (incorporating EPA's two-part ample margin of safety inquiry, set forth at 54 FR 38044 (Sept. 14, 1989), which implemented the requirements of section 112 of the 1977 CAA). Under this approach, we must first determine what level is ''acceptable'' based exclusively upon the Administrator's determination of the risk to health at a particular emission level. Vinyl Chloride, 824 F.2d at 1164.[56] The Court stressed, however, that ''safe'' in this context does not mean ''risk-free.'' Rather, the Agency must make a determination about what is safe ''based upon an expert judgment with regard to the level of emission that will result in an ''acceptable'' risk to health,'' taking into account the many every day activities that entail health risks but are not considered to be unsafe. *Id.* at 1165.

In this regard, we also note that section 112(f) makes a distinction between pollutants classified as ''known, probable or possible carcinogens'' and other hazardous air pollutants such as Hg. For possible carcinogens, the Agency must set a residual risk standard if ''the individual most exposed to emissions from a source'' is subject to a risk above a certain level. This additional requirement does not apply to other hazardous air pollutants. Therefore, in determining whether any level of Hg emission is 'acceptable' under 112(f), we would use the same basic approach we have used in this case. Although we would evaluate the risk to the maximum exposed individual, which we essentially did for purposes of assessing the hazards posed by utility emissions under section 112(n)(1)(A), we believe that ''the distribution of risks in the exposed population, incidence, the science policy assumption and uncertainties associated with the risk measures, and the weight of evidence that a pollutant is harmful to health are [also] important factors to be considered'' in making a decision as to whether a given level of emissions is acceptable. 54 FR at 38044.

Then, ''[i]n the ample margin decision [the second step], the Agency again considers all of the health risk and other health information considered in the first step. Beyond that information, additional factors relating to the appropriate level of control will also be considered, including costs and economic impacts of controls, technological feasibility, uncertainties, and any other relevant factors.'' 54 FR 38046.

As explained in section H.3. above, applying the general principles articulated in the Vinyl Chloride decision and the benzene rule, the Agency has concluded that power plant Hg emissions remaining after CAIR, and even more so after CAMR, do not pose hazards to public health. This determination was based on health considerations alone, as would be the case under the first step of a 112(f) analysis. Under the second step of a 112(f) analysis, we would then consider both the benefits and costs of further emission reductions. Based on what we know about the uncertainties and nature of the potential adverse effects associated with Hg exposure, the extent to which the public, including sensitive subpopulations, is exposed to Hg, and the extent to which such exposure could be reduced by further reducing Hg emissions from U.S. power plants, we have concluded that the cost of requiring further reductions in Hg emissions from power plants would significantly outweigh any benefits. Therefore, if we were proceeding under section 112(f), we would likely conclude that CAIR, and even more so CAMR, not only protects public health, but does so with an ''ample margin of safety.''

*I. The Final CAMR Will Not Lead to Localized ''Utility Hot Spots''*

1. What Is a ''Utility Hot Spot''?

As we said in the preamble to the proposed rule, Hg emissions from power plants sometimes are deposited locally near the plant (*i.e.*, within 25 km),

[55] It should be noted that section 112(f) requires consideration of effects on the environment in addition to human health. In contrast, 112(n) requires a narrower assessment.

[56] The Vinyl Chloride court did note, however, that under certain circumstances it might be appropriate to combine the two steps into one. Specifically, the court stated that ''[i]f the Administrator finds that some statistical methodology removes sufficiently the scientific uncertainty present in this case, then the Administrator could conceivably find that a certain statistically determined level of emissions will provide an ample margin of safety. If the Administrator uses this methodology, he cannot consider cost and technological feasibility: these factors are no longer relevant because the Administrator has found another method to provide an 'ample margin' of safety.'' 824 F.2d at 1165, fn 11.

specifically emissions of oxidized and particulate Hg. Nearby waterbodies may be a source of fish consumption for recreational and/or subsistence fishers, and thus local Hg deposition in nearby waterbodies could be a source of what some refer to as ''hot spots.'' In the proposed rule, we suggested that a ''power plant may lead to a hot spot if the contribution of the plant's emissions of Hg to local deposition is sufficient to cause blood Hg levels of highly exposed individuals near the plant to exceed the RfD.'' (*See* 69 FR 4702.)

Based on additional analysis and consideration of the ''hot spot'' issue and to ensure that stakeholders have a common understanding of how EPA uses the term, we define a ''utility hot spot'' as ''a waterbody that is a source of consumable fish with Methylmercury tissue concentrations, attributable solely to utilities, greater than the EPA's Methylmercury water quality criterion of 0.3 mg/kg.'' We believe that the water quality criterion is an appropriate indicator of a ''hot spot,'' given that the Methylmercury exposure pathway of greatest concern is fish consumption and that the water quality criterion was back calculated from the Methylmercury RfD using a high-end fish consumption rate.

2. EPA Does Not Believe That There Will Be Any Hot Spots After Implementation of CAIR and CAMR

As explained elsewhere in this preamble and in the TSD, for purposes of today's notice, EPA modeled utility Hg deposition, before and after implementation of CAIR and CAMR, using the Community Multi-Scale Air Quality (''CMAQ'') model, a three-dimensional eulerian grid model. CMAQ is the most sophisticated Hg dispersion model in existence. It uses a ''one-atmosphere'' approach and addresses the complex physical and chemical interactions known to occur among multiple pollutants in the free atmosphere.[57] The spatial resolution (*i.e.*, the ability to observe concentration or depositional gradients/differences) of the gridded output information from CMAQ for purposes of this analysis is 36 km.

We believe that this an appropriate scale given the exposure pathway. First, because much of the Hg deposited on the watershed of different ecosystems will eventually enter waterbodies through subsurface inflow and runoff, we consider a watershed scale analysis to be more appropriate than finer scale resolution that may only describe direct inputs to surface waters. Second, in larger waterbodies (*i.e.*, the Great Lakes) where there is substantial fishing activity, the higher trophic level fish species consumed by humans are likely migratory and the accumulation of Hg by these species will represent an aggregated signal from deposition over a wider area (*e.g.*, the entire waterbody within a watershed.) Since we are concerned about the cumulative dose over weeks and months from repetitive consumption of fish containing methylmercury, this fishing behavior should be considered in the exposure pathway. Based on the above considerations, we conclude that the HUC–8 watershed is the appropriate unit of measure for analysis. While this analysis covers the vast majority of the U.S. population that may be exposed to emissions from U.S. power plants, we acknowledge that there are inherent uncertainties at the extreme tails of the exposure distribution. We continue to advance the state of the science and the associated models to better understand the tail of this exposure distribution.

As discussed in section VII.D. of today's notice, EPA used fish tissue data from the National Listing of Fish and Wildlife Advisories and the National Fish Tissue Survey to determine Methylmercury fish tissue concentrations for numerous sample sites throughout the country. We then used CMAQ to determine the amount of utility Hg deposition, in conjunction with Mercury Maps (which associates an increment of change in Hg deposition with an equal change in Methylmercury fish tissue concentrations) to predict what fish concentrations at those sample sites would be after implementation of CAIR and CAMR. As discussed in section VII.E., those analyses conclude that none of the sample sites will exceed, as a result of utility emissions, the water quality criterion of 0.3 mg/kg. In fact, our analysis shows that fish tissue Methylmercury concentrations attributable to utility Hg emissions will be significantly below the water quality criterion. By 2020, after CAIR, levels at the 50th, 90th, 99th percentiles and maximum value sample site are predicted to be 0.01, 0.03, 0.10, and 0.25 mg/kg, respectively. After CAMR, levels at the 50th, 90th, 99th percentiles and maximum value sample site are predicted to be 0.01, 0.03, 0.09, and 0.19 mg/kg, respectively. Therefore, based on the information available to us at this time, our analyses indicate utility Hg emissions, after implementation of either CAIR or CAMR, will not result in ''hot spots.''

EPA conducted a similar analysis in its 1998 Utility Report to Congress (''Utility Study'') using the Industrial Source Complex Version 3 (''ISC3'') model. (See TSD) EPA analyzed four model plants representing four utility boilers: Large coal-fired, medium coal-fired, small coal-fired, and medium oil-fired. Each of these plants was also modeled at two generic sites: A humid site east of the 90 degrees west longitude, and a more arid site west of the 90 degree west longitude. (See Utility Study at 7–29). Hg deposition was modeled at a hypothetical lake located at three distances for each model site: 2.5, 10, and 25 km. The results of that analysis showed that under only one modeled scenario was the Methylmercury water quality criterion exceeded. Specifically, the model predicted that a hypothetical lake located 2.5 km from a large eastern coal-fired utility would experience Methylmercury fish tissue concentration of 0.43 mg/kg. None of the other 23 model facilities/lake combinations exceeded the water criterion. (See Utility Study at 7–37).

For a number of reasons more fully explained in our TSD, even though only one facility/lake combination exceeded the water quality criterion, we believe that the analysis done for the 1998 Utility Study was conservative and, hence, over predicted near-field Hg deposition and corresponding fish tissue concentrations in almost all situations. That analysis was a screening analysis and thus was conservative by design. For example, it did not incorporate a sophisticated treatment of the atmospheric chemistry and phase-transition behavior of Hg, as we have included in our CMAQ analysis, and our understanding of wet and dry deposition processes for Hg has improved significantly since then. As a result, we judge that the CMAQ model results represent a more accurate representation of near-field Hg impacts than can be obtained using the ISC3 modeling approach. See the discussion above about why the CMAQ model appropriately represents near-field deposition.

There are other factors that lead EPA to conclude that the Utility Study analysis overstated fish-tissue methylmercury concentrations in most situations. Based on the BAFs considered, the hypothetical ecosystem described in the RTC is more sensitive

[57] In simulating the transport, transformation, and deposition of pollutants, CMAQ resolves 14 vertical layers in the atmosphere, and employs finer-scale resolution near the surface of the boundary layer to simulate deposition to both terrestrial and aquatic ecosystems. CMAQ atmospheric transport is defined using a higher-order meteorological model, commonly the Fifth-Generation Pennsylvania State University/National Center for Atmospheric Research mesoscale model (MMM5).

than three out of four ecosystems chosen for the case studies (see Table 4–6, page 25 of Ecosystem Scale Modeling for Mercury Benefits Analysis) and is less sensitive than one (Lake Barco). Comparing these case studies to empirically derived BAFs characterized by the Office of Water indicates that modeled fish tissue responses in three of four case studies had empirically derived BAFs that fell between the 5th and 50th percentiles of the geometric mean of field-measured BAFs for trophic level 4 species obtained from the published literature (EPA 2000). The model ecosystem described in the RTC fell between the 50th and 95th percentile for BAFs, and one of the case studies (Lake Barco) exceeded the 95th percentile.

Some limitations to the BAF approach deserve mention. Because Methylmercury concentrations in the water column are highly variable, empirically-derived BAFs are inherently underdetermined and have limited predictive power. A more credible approach based on our current knowledge is to forecast changes in fish Hg concentrations using information on the food-web dynamics (''bioenergetics'') of different ecosystems. Such a model (BASS) was applied in one of the case studies described in Chapter 3 of the RIA for CAMR, and showed that while the BAFs calculated from the outputs of the bioenergetics-based bioaccumulation model were within a factor of 2 of the empirically derived BAF used in the SERAFM model, the empirically derived fish Hg concentrations were more conservative than the BASS model for this one ecosystem. (See TSD). Thus, the above information suggests that our RTC analysis may have over predicted fish-tissue methylmercury concentrations in many ecosystems that could be impacted by Hg deposition from U.S. power plants. However, it is important to note that fish tissue methylmercury concentrations due to power plants may be higher in some ecosystems (for example, ecosystems similar to Lake Barco described in Ch. 3 of the CAMR RIA).

For all the above described reasons, we think our current modeling approach as described in the TSD provides for a more advanced, state-of-the-science assessment of the atmospheric fate, transport, deposition, and cycling of Hg through the environment than the modeling approach used in the Utility Study. For these reasons, we have no evidence that utility Hg emissions after CAIR (and even more so after CAMR) will result in hot spots.

Based on our experience with the Title IV acid rain program and our modeling using IPM, we believe that the cap-and-trade approaches adopted under CAIR and CAMR will reduce Hg exposure in most areas and create strong economic incentives for the reduction of Hg emissions in the future.

First, modeling runs suggest that large coal-fired utilities contribute more to local Hg deposition than medium-sized and smaller coal-fired utilities.[58] However, under a cap-and-trade system, large utilities are more likely to over-control their emissions and sell resulting emission allowances than smaller utilities, which are less likely to be the source of a local hot spot. Under basic utility economics of capital investment, when capital is limited, up-front capital costs of control equipment are significant, and where emission-removal effectiveness (measured in percentage of removal) is unrelated to plant size, it makes more economic sense for a company to allocate pollution-prevention capital to its larger facilities where more allowances can be earned, than to its smaller ones. In other words, we would expect economies of scale of pollution control investment to be made at larger plants. Moreover, newer plants tend to be larger. Since newer plants have longer expected lifetimes, providing a longer return on investment, we would expect this to be an incentive for these larger facilities to choose to control and sell credits.

Indeed, as part of its analysis of the President's 2003 Clear Skies initiative, EPA analyzed Hg emissions reductions under a cap-and-trade mechanism. In the Clear Skies example, the greatest emissions reductions were projected to occur at the electric generating sources with the highest Hg emissions. This pattern is similar to that observed in the $SO_2$ emissions trading program under the Acid Rain Program. Under Clear Skies, compared to a base case of existing programs, $Hg^{2+}$ emissions (which tend to be deposited locally, *i.e.*, within 25 kilometers) from power plants located up to 10 kilometers from a water body were projected to decrease by over 60 percent by 2020.

Second, the types of Hg that are deposited locally—$Hg^{2+}$ and $Hg_p$—are controlled by the same equipment that controls PM, $SO_2$, and $NO_X$. Thus, as utilities invest in equipment to comply with EPA's new PM and ozone standards (*e.g.*, the CAIR rule that was signed on March 10, 2005 and new State Implementation Plans (SIPs) for PM and ozone), the Agency expects ''co-benefit'' Hg reductions.

Moreover, EPA's IPM modeling for today's action predicts that larger emitters generally are expected to reduce the most, as was our experience with the Acid Rain Program. Through our CMAQ modeling, we further predict utility-attributable deposition reductions in areas where hotspots would otherwise potentially occur. As described in section VII.E., the median deposition level is reduced by only 8 percent when utilities emissions are zeroed out in 2001, but in areas with the highest deposition levels, zeroing out utilities reduces the 99th percentile deposition level by 15 percent. After implementation of CAIR in 2020, areas with high levels of utility deposition receive a larger reduction in utility-attributable Hg deposition relative to areas with a relatively small level of utility-attributable deposition.

For all these reasons, we do not anticipate that our final CAMR rule will result in local Hg hot spots; to the contrary, we anticipate that our cap-and-trade CAMR will actually eliminate hot spots that may have previously existed.

In addition to reductions required by the CAIR and CAMR caps, states have the authority to address local health-based concerns separate from these programs. Although more stringent state regulations would reduce the flexibility of a cap-and-trade system, states nevertheless have such authority.

3. Continued Evaluation of Utility Hg Emissions

For all the reasons discussed above and elsewhere in this preamble, EPA does not believe that CAIR or CAMR will result in utility-attributable hot spots. That said, we recognize that even our state-of-the-art models and inputs have certain limitations that make it impossible for us to definitively conclude that there are no circumstances under which a hot spot could result even after full implementation of CAIR and CAMR. However, in order for a hot spot to occur, there would have to be an alignment of key environmental factors, such as meteorology, deposition, and ecosystem processes in conjunction with a large uncontrolled near-field utility unit or a collection of such units. The likelihood of these factors converging is remote. Nevertheless, we intend to monitor this situation closely and continue to advance the state of the science of Hg transport and fate. In that

[58] Indeed, the one model utility in the Utility Study analysis that exceeded the water quality criterion at a hypothetical lake within 2.5 km was an eastern large coal-fired utility. Given the tendencies for larger facilities to control under a cap-and-trade system, we do not anticipate that larger plants will cause localized hot spots.

regard, if we receive new information that raises the possibility of utility-attributable hotspots, we will evaluate the situation and take appropriate action.

We believe that we have the authority under the Act to address future hotspots appropriately. Indeed, today we have identified other authorities under the CAA through which we can obtain Hg reductions from coal-fired Utility Units—either by regulating Hg directly, or indirectly as the result of co-benefits. The 1998 Utility Study also identifies other requirements of the Act with which Utility Units must comply that can result in HAP reductions, including Hg. Because we do not currently have any facts before us that would lead us to conclude that utility-attributable hotspots exist, we do not at this time reach any conclusion as to which statutory authority we would use to address such a fact-specific situation because it necessarily depends on the facts.

For example, if in the future we determine that utility-attributable hotspots exist and that those hotspots occur as the result of Hg emissions from coal-fired Utility Units, we may promulgate a tighter section 111 standard of performance, provided we determine the technology can achieve the contemplated reductions. We could revise the standard of performance by adjusting the cap-and-trade program to limit trading by high-emitting Utility Units. As the DC Circuit has recognized, we have discretion to weigh the statutory factors identified in section 111(a), which include cost, in setting a standard of performance. *Lignite Energy Council* v. *EPA*, 198 F.3d 930 (DC Cir. 1999). We therefore believe that under section 111, we can evaluate the cost of emission reduction in the context of the identified hotspots, and we may reasonably conclude that the additional cost of a more stringent standard is appropriate in light of the health concern associated with the hotspots. Alternatively, we may in the future identify utility-attributable hotspots and determine that such hotspots can be addressed by virtue of Hg co-benefits control achieved through the promulgation of other requirements. Thus, although we cannot conclude today which statutory authority we would implement to address utility-attributable hotspots because that determination necessarily hinges on the facts associated with the identified hotspots, we do conclude that were such a situation to occur, we believe that EPA has adequate authority to address any such situation that may arise in the future.

*J. The Global Pool of Hg Emissions*

1. Background

As explained above, Hg is emitted into the environment in different ways. About one-third of the Hg in the atmosphere is from human-caused activities (''anthropogenic''), one-third is from natural processes (such as volcanic eruption, groundwater seepage and evaporation from the oceans), and one-third constitutes re-emitted emissions, which is Hg from human-caused activities or natural processes that is emitted into the atmosphere, deposited and then re-emitted into the atmosphere. United States anthropogenic Hg emissions are estimated to account for about three percent of the global pool of Hg emissions, and United States (''domestic'') utilities are estimated to account for about one percent of that total global pool. See Utility Study at 7–1 to 7–2, 69 FR at 4657–58 (January 20, 2004). The global pool therefore includes all human-caused activities that occur both within the United States and abroad, all emissions that result from natural processes anywhere in the world, and re-emitted Hg.

To place the Hg emissions from domestic Utility Units in context, EPA modeled different scenarios that analyze the effect of domestic utility Hg emissions in the context of the global pool. We describe that modeling in detail above.

Our modeling shows that in virtually all instances, the utility-attributable methylmercury levels are a very small fraction of the overall methylmercury levels. For 16 percent of the modeled sites, overall levels of methylmercury in fish tissue in 2020 are projected to be above the 0.3 mg/kg water quality criterion. At the 90th percentile, in 2020, after implementation of CAIR, overall levels are projected at 0.79 mg/kg, and at the 99th percentile, at 1.64. The greatest fraction of these methylmercury levels are attributable to non-air sources, including mines and chloralkali plants, and uncontrollable air sources, including international emissions from industrial and utility sources. In virtually all of these instances, the Utility-attributable methylmercury levels are a very small fraction of the overall methylmercury levels. For the highest 10 percent of utility-attributable methylmercury fish tissue levels, utility-attributable methylmercury accounted for a maximum of 9 percent of total methylmercury concentrations, and an average of only 4 percent. Clearly, even at locations with high levels of utility Hg deposition, other sources of Hg contribute most of the methylmercury.

2. Even Examining Utility Hg Emissions in the Context of the Global Pool, We Cannot Conclude That It Is Appropriate to Regulate Coal-Fired Utility Units Under CAA Section 112

Our conclusions in sections VI.J and VI.K above are based solely on our analysis of Hg emissions from coal-fired Utility Units. See generally 65 FR 79,826–29 (explaining that Hg from coal-fired units is the HAP of greatest concern); Utility Study, ES–27 (same). We focused our analysis in this regard because EPA has interpreted section 112(n)(1)(A) to examine the hazards to public health that are ''a result of'' Utility Units. See CAA section 112(n)(1)(A). As explained in section III above, the focus in section 112(n)(1)(A) on emissions ''result[ing]'' from Utility Units is significant, particularly when contrasted against other provisions of the Act, such as section 110(a)(2)(D). In section 110(a)(2)(D), Congress sought to regulate any air pollutant that will ''contribute to'' nonattainment. Thus, under section 110(a)(2)(D), we can regulate a pollutant if it ''contributes'' to a nonattainment problem, but does not itself cause the problem. EPA has concluded that section 112(n)(1)(A) is different, where Congress directed EPA to study the hazards to public health ''reasonably anticipated *to occur as a result of emissions of*'' Utility Units. (emphasis added)

Moreover, Congress' focus on the hazards to public health resulting from Utility Units may reflect Congress' recognition of the unique situation posed by Hg, which is that Hg emissions from domestic utilities represent less than one percent of the global pool. Indeed, Congress specifically addressed Hg in other provisions of section 112(n). For example, under section 112(n)(1)(B), Congress required EPA to complete a study addressing Hg emissions from Utility Units and other sources of Hg. See CAA section 112(n)(1)(B); see also CAA Section 112(n)(1)(C) (requiring National Institute of Environmental Health Sciences to determine the threshold level of Hg exposure below which adverse human health effects are not expected to occur).

Nevertheless, even were we to examine hazards to public health on a broader scale by focusing on the global Hg pool, our conclusion (discussed above in Section IV.A.) that it is not appropriate to regulate coal-fired Utility Units under section 112 on the basis of Hg emissions would be the same. Our analyses in support of that conclusion would differ, however, because we

would be assessing whether it is appropriate to regulate Utility Units under section 112 by reference to a different level of Hg emissions. As explained in section III of this notice, we have discretion, in determining whether regulation under section 112 is appropriate, to consider other factors and, in particular, any unique facts and circumstances associated with the HAP emissions at issue. Here, the unique circumstance is that domestic Utility Units represent only one percent of the global pool. Our modeling shows that were we to prohibit all Hg emissions from domestic utilities in this country, such regulation would result in only a very small improvement in methylmercury levels in the waterbodies that exceed the methylmercury water quality criteria. Therefore, precluding all Hg emissions from coal-fired powerplants would, in effect, force such plants out of business, yet reduce virtually none of the risks to public health stemming from the global Hg pool.

In these circumstances, we find that it is not appropriate to regulate coal-fired Utility Units under section 112 on the basis of the global Hg pool because the health benefits associated with such regulation would be nominal and the costs extreme. It is also not appropriate to regulate Hg emissions from coal-fired utility units remaining after imposition of the requirements of the Act because the global sources contributing most significantly to the remaining public health hazards are not domestic utilities and the sole question before us under section 112(n)(1)(A) is whether it is appropriate to regulate Utility Units under section 112 of the Act.[59]

*K. Further Study*

The behavior of Hg in the atmosphere and in aquatic systems, and the human health effects of Hg are areas of much interest and activity within the scientific and health research communities. In addition, our ability to quantify and value the effects that changes in Hg releases may have to human health is continuing to evolve. Furthermore, technologies and techniques for limiting Hg emissions from power plants are also rapidly advancing. EPA will continue to monitor developments in all these areas, as well as continuing its own efforts to advance the state of the science. One of the benefits of today's approach is that it provides a flexible structure that could be modified to accommodate new information should it become available.

## VII. EPA'S Authority to Regulate HAP From Utility Units Under CAA Section 111

As explained in sections IV and VI above, we conclude today, among other things, that EPA's December 2000 appropriate and necessary finding lacked foundation because it failed to consider the HAP reductions that could be obtained through implementation of section 111, and therefore whether it was ''necessary'' to regulate under section 112. We decide today that it is not ''necessary'' to regulate utility HAPs under section 112, in particular because of our authorities to effectively reduce utility HAPs under CAA sections 110(a)(2)(D) and 111.[60]

We describe below the regulatory scheme under section 111 and EPA's authority to regulate HAP emissions under that section. We also describe the recently issued Clean Air Mercury Rule (''CAMR''), which implements CAA section 111. Finally, we demonstrate that the CAMR rule, once implemented, will result in levels of Hg emissions from coal-fired Utility Units that pose no hazards to public health.

*A. Overview of the Requirements of Section 111*

CAA section 111 creates a program for the establishment of ''standards of performance.'' A ''standard of performance'' is ''a standard for emissions of air pollutants which reflects the degree of emission limitation achievable through the application of the best system of emission reduction, which (taking into account the cost of achieving such reduction, any nonair quality health and environmental impacts and energy requirements), the Administrator determines has been adequately demonstrated.'' CAA section 111(a)(1).

For new sources, EPA must first establish a list of stationary source categories, which, the Administrator has determined ''causes, or contributes significantly to, air pollution which may reasonably be anticipated to endanger public health or welfare.'' CAA section 111(b)(1)(A)). EPA must then set federal standards of performance for new sources within each listed source category. (CAA section 111(b)(1)(B)). Like section 112(d) standards, the standards for new sources under section 111(b) apply nationally and are effective upon promulgation. (CAA section 111(b)(1)(B)).

Existing sources are addressed under section 111(d) of the CAA. EPA can issue standards of performance for existing sources in a source category only if it has established standards of performance for new sources in that same category under section 111(b), and only for certain pollutants. (CAA section 111(d)(1)). Section 111(d) authorizes EPA to promulgate standards of performance that states must adopt through a SIP-like process, which requires state rulemaking action followed by review and approval of state plans by EPA. If a state fails to submit a satisfactory plan, EPA has the authority to prescribe a plan for the state. (CAA section 111(d)(2)(A)).

*B. EPA's Authority to Regulate HAP Under Section 111*

Section 111(b) covers any category of sources that causes or contributes to air pollution that may reasonably be anticipated to endanger public health or welfare and provides EPA authority to regulate new sources of such air pollution. EPA included Utility Units on the section 111(b) list of stationary sources in 1979 and has issued final standards of performance for new Utility Units for pollutants, such as $NO_X$, PM, and $SO_2$. See 44 FR 33580; June 11, 1979; Subpart Da of 40 CFR Part 60. Nothing in the language of section 111(b) precludes EPA from issuing additional standards of performance for other pollutants, including HAP, emitted from new Utility Units. Moreover, nothing in section 112(n)(1)(A) suggests that Congress sought to preclude EPA from regulating Utility Units under section 111(b). Indeed, section 112(n)(1)(A)

[59] *See* 36 Cong. Rec. S16895, S16899 (daily ed. Oct. 27, 1990) (Statement of Senator Burdick, member of the Conference Committee and Chairman of the Committee on Environment and Public Works) (''Under section 112(n) utility emissions are exempt from air toxics regulation until studies are completed and the Administrator determines, based on the studies, that air toxics regulation is warranted. The hazardous substance of greatest concern here is Hg. The Senate bill required Hg reductions from coal-fired units. The Senate provision could not be sustained by the scientific facts. What little is known of Hg movement in the biosphere, suggests that its long residence time makes it a long-range transport problem of international or worldwide dimensions. Thus, a full control program in the United States requiring dry scrubbers and baghouses to control Hg emissions from coal-fired power plants would double the costs of acid rain control with no expectation of perceptible improvement in public health in the United States. I am pleased the conferees adopted the House provision on hazardous air pollutants with respect to Utility Units.'')

[60] We also conclude today, as discussed in detail above, that Hg emissions from coal-fired Utility Units remaining after implementation of section 110(a)(2)(D) do not result in hazards to public health. See Sections V and VI. Section 111, which is the focus of this section of the preamble, constitutes an independent basis for our actions today, because that provision, once implemented, will effectively address any Hg emissions from coal-fired Utility Units, and for that reason, Hg emissions from coal-fired Utility Units that remain ''after imposition of the requirements of th[e] Act do not result in hazards to public health.'' CAA Section 112(n)(1)(A).

provides to the contrary, in that it calls for an analysis of utility HAP emissions ''after imposition of the requirements of th[e] Act,'' which we have reasonably interpreted to mean those authorities that EPA reasonably anticipated at the time of the Study would have reduced utility HAP emissions.

EPA received numerous comments concerning its authority under section 111 to regulate HAP from Utility Units. Those comments focused largely on EPA's authority to regulate existing units under section 111(d). As explained below, EPA has reasonably interpreted section 111(d) as providing authority to regulate HAP from existing Utility Units.

Unlike section 111(b), section 111(d) specifically references CAA section 112. The import of that reference is not clear on the face of Public Law 101–549, which is the 1990 amendments to the CAA, because the House and Senate each enacted a different amendment to section 111(d). The Conference Committee never resolved the differences between the two amendments and both were enacted into law as part of section 111(d). EPA is therefore confronted with the highly unusual situation of an enacted bill signed by the President that contains two different and inconsistent amendments to the same statutory provision.

1. Overview of the Two Amendments in Section 111(d)

An important starting point for evaluating the two amendments to section 111(d) in 1990 is the 1977 Act. Section 111(d) of the 1977 CAA provides, in pertinent part:

> The Administrator shall prescribe regulations which shall establish a procedure similar to that provided by section 7410 of this title under which each State shall submit to the Administrator a plan which (A) establishes standards of performance for any existing source for any air pollutant (i) for which air quality criteria have not been issued or which is not included on a list published under section 7408(a) or 7412(b)(1)(A) of this title, but (ii) to which a standard of performance under this section would apply if such existing source were a new source. * * *

42 U.S.C.A. 7411(d) (West 1977); Public Law 95–95. The above language provides that standards of performance under section 111(d) cannot be established for any pollutant that is listed as a ''hazardous air pollutant'' under section 112(b)(1)(A) of the 1977 CAA.

In 1990, Congress significantly amended the CAA. Among other things, it significantly amended section 112, it enacted Title IV of the CAA, which includes numerous provisions that are directly applicable to Utility Units, and it amended section 111(d). Both the House and the Senate bills included different amendments to section 111(d), and both of those amendments were enacted into law.

The first amendment, which is the House amendment, is contained in section 108(g) of Public Law 101–549. That section amends section 111(d)(1)(A)(i) of the 1977 CAA by striking the words ''or 112(b)(1)(A)'' from the 1977 CAA and inserting in its place the following phrase: ''or emitted from a source category which is regulated under section 112.'' The second amendment to section 111(d), which is the Senate amendment, is labeled a ''conforming amendment'' and is set forth in section 302 of Public Law 101–549. That section amends CAA section 111(d)(1) of the 1977 CAA by striking the reference to ''112(b)(1)(A)'' and inserting in its place ''112(b).'' The two amendments are reflected in parentheses in the Statutes at Large as follows:

> The Administrator shall prescribe regulations which shall establish a procedure similar to that provided by section 7410 of this title under which each State shall submit to the Administrator a plan which (A) establishes standards of performance for any existing source for any air pollutant (i) for which air quality criteria have not been issued or which is not included on a list published under section 7408(a) *(or emitted from a source category which is regulated under section 112)* [House amendment,] *(or 112(b))* [Senate Amendment,] but (ii) to which a standard of performance under this section would apply if such existing source were a new source. * * *

The United States Code does not contain the parenthetical reference to the Senate amendment, as set forth in section 302 of Public Law 101–549. The codifier's notes to this section of the Official Committee Print of the executed law state that the Senate amendment ''could not be executed'' because of the other amendment to section 111(d) contained in the same Act. The United States Code does not control here, however. The Statutes at Large constitute the legal evidence of the laws, where, as here, Title 42 of the United States Code, which contains the CAA, has not been enacted into positive law. *See* 1 U.S.C. 204(a); *United States* v. *Welden,* 377 U.S. 95, 98 n.4 (1964); *Washington-Dulles Transportation Ltd.* v. *Metropolitan Washington Airports Auth.,* 263 F.3d 371, 378 (4th Cir. 2001). We did not receive any comments disputing either that the Statutes of Large constitute the legal evidence of the laws in this case, or that the 1990 Act contains two different amendments to the same statutory provision.[61]

2. Overview of Legislative History

As we indicated in the proposal, there is scant legislative history concerning the two amendments to section 111(d). The most persuasive legislative history that is relevant to our task of interpreting and reconciling the House and Senate amendments to section 111(d) is the final Senate and House bills. Those bills reflect significantly different treatment of Utility Units under section 112, as well as different amendments to section 111(d).

We begin our analysis with Senate bill 1630, as passed by the Senate on April 3, 1990. That bill included a provision concerning Utility Units. See generally Section 301 (hazardous air pollutants), A Legislative History of the Clean Air Act Amendments of 1990 (''Legislative History''), Vol III, at 4431–33 (Nov. 1993). Under that provision, EPA was to conduct a study on the health and environmental effects of utility HAP emissions within three years of enactment of the statute. The Senate Bill also required EPA to promulgate section 112(d) emissions standards for Utility Units within five years of enactment of the statute. The Senate bill further required EPA to place the study on utility HAP emissions in the docket for the section 112(d) rulemaking for Utility Units. Finally, the Senate bill, in a section labeled ''conforming amendments,'' amended section 111(d) by striking the reference to ''112(b)(1)(A)'' in the 1977 Act and replacing it with ''112(b).'' *See generally* Section 305 (conforming amendments), Legislative History, Vol III, at 4534.

The final bill that passed the House in May 1990 stands in stark contrast to the Senate Bill. The House Bill included section 112(l), entitled ''Electric Utilities.'' *See generally* Section 301 (hazardous air pollutants), Legislative History, Vol II, at 2148–49. That provision is identical to section 112(n)(1)(A). See 104 Stat. 2558. The House bill also amended section 111(d) by replacing the words ''or 112(b)(1)(A)'' with ''or emitted from a source category which is regulated under section 112.'' See Legislative History, Vol. II, at 179.

Finally, the House provision concerning Utility Units is the provision that was enacted into law as section 112(n)(1)(A). The Senate approach to

[61] Although the notes accompanying the Official Committee Print do not interpret with the force of law, their conclusion about the appropriate effect to give these conflicting amendments is evidence that EPA's conclusion is reasonable.

regulating Utility Units under section 112 did not prevail. *See* Legislative History, Vol. I at 1451.

3. EPA's Interpretation of the Two Amendments to Section 111(d)

Neither we, nor commenters, have identified a canon of statutory construction that addresses the specific situation with which we are now faced, which is how to interpret two different amendments to the exact same statutory provision in a final bill that has been signed by the President. The canon of statutory construction that calls for harmonizing conflicting statutory provisions, where possible, and adopting a reading that gives some effect to both provisions is not controlling here because that canon applies where two provisions of a statute are in conflict, not where two amendments to the same statutory provision are in conflict. Nevertheless, we have attempted to follow the general principles underlying this canon of construction. We also rely on the legislative history noted above as support for our interpretation of the two amendments to section 111(d).

Turning first to the House amendment, we noted at proposal that a literal reading of that amendment is that a standard of performance under section 111(d) cannot be established for any air pollutant—HAP and non-HAP—emitted from a source category regulated under section 112. See 69 FR 4685. Certain commenters disagreed with our reading. They argue instead that a literal reading of the House amendment is that EPA cannot regulate under section 111(d) any HAP that is emitted from any source category regulated under section 112. This reading modifies the plain language of section 111(d), as amended by the House in 1990, in significant respects. First, it changes the terms ''any pollutant'' to ''HAP,'' and second, it changes the phrase ''a source category,'' to ''any source category'' and therefore commenters'' reading of the amendment cannot be characterized as a ''literal' reading.

Section 111(d), as amended by the House, specifically provides:

> Each State shall submit to the Administrator a plan which (A) establishes standards of performance for any existing source *for any air pollutant * * * which is not emitted from a source category which is regulated under section 112.*

We interpret this language to mean that EPA cannot establish a standard of performance under CAA section 111(d) for any ''air pollutant''—including both HAP and non-HAP—that is emitted from a particular source category regulated under section 112. Thus, under our interpretation, if source category X is ''a source category'' regulated under section 112, EPA could not regulate HAP or non-HAP from that source category under section 111(d). This interpretation reflects the distinction drawn in section 111(d), as amended by the House, between ''any pollutant'' and ''a source category.'' The phrase ''any pollutant'' existed prior to the 1990 amendments and therefore it can be reasonably assumed that when the House amended section 111(d) in 1990, it intentionally chose the words ''a source category,'' as opposed to ''any source category. Although we recognize that the phrase ''a source category'' is susceptible to different interpretations, in that it could conceivably mean one or many source categories, we believe that our interpretation is a permissible construction given the juxtaposition of the phrases ''any pollutant'' and ''a source category'' in section 111(d), as amended by the House.

Moreover, consistent with our interpretation of the House amendment, we believe that the House sought to change the focus of section 111(d) by seeking to preclude regulation of those pollutants that are emitted from a particular source category that is actually regulated under section 112. The legislative history described above is instructive in this regard. At the same time the House substantively amended section 111(d), it passed a bill containing a provision (section 112(l)) that is identical to section 112(n)(1)(A) of the current act. Section 112(l) of the House bill calls for EPA to examine how the ''imposition of the requirements of th[e] Act'' would affect utility HAP emissions. This provision suggests that the House did not want to subject Utility Units to duplicative or overlapping regulation. In this regard, the House's amendment to section 111(d) could reasonably reflect its effort to expand EPA's authority under section 111(d) for regulating pollutants emitted from particular source categories that are not being regulated under section 112. Such a reading of the House language would authorize EPA to regulate under section 111(d) existing area sources which EPA determined did not meet the statutory criterion set forth in section 112(c)(3), as well as existing Utility Units (in the event EPA did not decide to regulate such units under section 112).

The Senate amendment provides that a section 111(d) standard of performance cannot be established for any HAP that is listed in section 112(b)(1), regardless of whether the source categories that emit such HAP are actually regulated under section 112. The Senate amendment reflects the Senate's intent to retain the pre-1990 approach of precluding regulation under CAA section 111(d) of any HAP listed under section 112(b). The Senate's intent in this regard is confirmed by the fact that its amendment is labeled a ''conforming amendment,'' which is generally a non-substantive amendment. By contrast, the House amendment is not a conforming amendment.[62]

Moreover, the Senate's conforming amendment is consistent with the Senate's treatment of Utility Units in the final Senate Bill. Unlike the House bill, the Senate bill did not call for an examination of the other requirements of the CAA. Nor did it provide EPA discretion to determine whether Utility Units should be regulated under section 112. Instead, the Senate bill included a provision that would have required EPA to establish section 112(d) emission standards for Utility Units by a date certain. This provision, which was never enacted into law, is consistent with the Senate's conforming amendment which provides that HAP listed under section 112(b) cannot be regulated under section 111(d).

Based on the legislative history described above, we believe that the House amendment, as we have interpreted it, is wholly consistent with section 112(l) of the House bill, which the conference committee adopted as the provision governing Utility Units (section 112(n)(1)(A). It is hard to conceive that Congress would have adopted section 112(n)(1)(A), yet retained the Senate amendment to section 111(d). While it appears that the Senate amendment to section 111(d) is a drafting error and therefore should not be considered, we must attempt to give effect to both the House and Senate amendments, as they are both part of the current law.

The House and Senate amendments conflict in that they provide different standards as to the scope of EPA's authority to regulate under section 111(d). As we explained at proposal, in an effort to give some effect to both amendments, we reasonably interpret the amendments as follows: Where a source category is being regulated under section 112, a section 111(d) standard of performance cannot be established to address any HAP listed under section 112(b) that may be emitted from that particular source category. Thus, if EPA is regulating source category X under section 112, section 111(d) could not be

[62] There is a section of the final House bill that includes conforming amendments. The House amendment to section 111(d) does not appear in that sectiono of the bill, however. *See* Legislative History, Vol. II, at 179, 1986.

used to regulate any HAP emissions from that particular source category. This is a reasonable interpretation of the amendments to section 111(d) because it gives some effect to both amendments. First, it gives effect to the Senate's desire to focus on HAP listed under section 112(b), rather than applying the section 111(d) exclusion to non-HAP emitted from a source category regulated under section 112, which a literal reading of the House amendment would do. Second, it gives effect to the House's desire to increase the scope of EPA's authority under section 111(d) and to avoid duplicative regulation of HAP for a particular source category. *See* 136 Cong. Rec. H12911, 12934 (daily ed. Oct. 26, 1990) (the conferees adopted section 112(n)(1)(A) ''because of the logic of basing any decision to regulate on the results of scientific study and because of the emission reductions that will be achieved and the extremely high costs that electric utilities will face under other provisions of the new Clean Air Act amendments.'').

We recognize that our proposed reconciliation of the two conflicting amendments does not give full effect to the House's language, because a literal reading of the House language would mean that EPA could not regulate HAP or non-HAP emitted from a source category regulated under section 112. Such a reading would be inconsistent with the general thrust of the 1990 amendments, which, on balance, reflects Congress' desire to require EPA to regulate more substances, not to eliminate EPA's ability to regulate large categories of pollutants like non-HAP. Furthermore, EPA has historically regulated non-HAP under section 111(d), even where those non-HAP were emitted from a source category actually regulated under section 112. *See, e.g.,* 40 CFR 62.1100 (California State Plan for Control of Fluoride Emissions from Existing Facilities at Phosphate Fertilizer Plants). We do not believe that Congress sought to eliminate regulation for a large category of sources in the 1990 Amendments and our proposed interpretation of the two amendments to section 111(d) avoids this result.[63]

Finally, in assessing whether to revise the December 2000 ''necessary'' finding, it is reasonable to look to whether CAA section 111 constituted a viable alternative authority for regulating utility HAP emissions prior to the December 2000 finding. The answer is yes and therefore under our proposed interpretation of the conflicting amendments, we could have regulated HAP from Utility Units under section 111(d). We listed coal- and oil-fired Utility Units under section 112(c) in December 2000 based solely on our appropriate and necessary finding. As explained above, that finding lacks foundation and recent information confirms that it is neither appropriate nor necessary to regulate Utility Units under CAA section 112. We should have recognized prior to the December 2000 finding that section 111 constituted a viable authority for regulating utility HAP emissions and therefore should have never listed Utility Units on the Section 112(c) list. In addition, as explained below, the December 2000 finding and associated listing is not a final agency action and EPA can therefore make revisions to that finding at any point prior to taking final action. Such revisions are particularly appropriate here, because the prior finding is incorrect and new information confirms this fact.

Some commenters argue that their reading of the House amendment and reconciliation of the amendments is reasonable, but the question is not whether commenters have identified a reasonable construction of section 112(d). Rather, the issue is whether our construction is a permissible one, and for the reasons set forth above, we believe that it is. *See Smiley* v. *Citibank,* N.A. 517 U.S. 735, 744–45 (1996) (a ''permissible'' interpretation is one that is ''reasonable''). Other commenters effectively ask us to ignore the House amendment because the Senate amendment reflects the law as of 1977. We cannot ignore the House amendment, as it is part of current law, and Congress substantially amended the law in 1990, by including, among other things, section 112(n)(1)(A).[64]

## VIII. Removal of Coal- and Oil-Fired Utility Units From the Section 112(C) List

Section 112(n)(1)(A) sets forth the criteria for regulating Utility Units under section 112. The criteria are: Whether regulation of Utility Units under section 112 of the CAA is ''appropriate'' and ''necessary.'' In December 2000, EPA added coal- and oil-fired Utility Units to the section 112(c) list in light of its positive appropriate and necessary finding for such units. *See* 65 FR 79831.

In the January 2004 proposed rule, EPA proposed removing coal- and oil-fired Utility Units from the section 112(c) list based on our proposed reversal of the December 2000 finding. Today, we conclude that the December 2000 finding lacked foundation and that regulation of coal- and oil-fired Utility Units under section 112 is not appropriate and necessary. Based on those decisions and our revision of the December 2000 finding, we remove coal- and oil-fired Utility Units from the section 112(c) list. We disagree with those commenters that argue that EPA cannot remove coal and oil-fired Utility Units from the section 112(c) list without satisfying the delisting criteria in section 112(c)(9).

EPA reasonably interprets section 112(n)(1)(A) as providing it authority to remove coal- and oil-fired units from the section 112(c) list at any time that it makes a negative appropriate and necessary finding under the section. Congress set up an entirely different structure and predicate for assessing whether Utility Units should be listed for regulation under section 112. Compare 112(c)(1) and (c)(3), with 112(n)(1)(A). Section 112(n)(1)(A)

[63] The first instance in which the Agency proposed an interpretation of the conflicting House and Senate amendments to CAA section 111(d) was in the January 2004 proposed rule. We recognize that we may have made statements concerning section 111(d), since the 1990 Amendments, but those statements did not recognize or account for the two different amendments to section 111(d), as enacted in 1990. We are also amending 40 CFR 60.21, as part of the final CAMR. That regulation, which was promulgated in 1975, interprets the 1970 CAA and defines a ''designated pollutant'' for purposes of section 111(d), as excluding any pollutant that is listed on the section 112(b)(1)(A) list. There is no section 112(b)(1)(A) in the current act, as amended in 1990. We are therefore revising 40 CFR 60.21 because it does not reflect the current language of section 111(d), as amended in 1990.

[64] Finally, some commenters argue that EPA's interpretation of the conflicting amendments was unreasonable, because it would give EPA discretion to regulate area sources, under section 111, as opposed to section 112. These commenters fail to recognize the listing criteria for area sources under section 112(c)(3). That section, for example, provides that EPA shall list a category or subcategory of area sources under section 112 if it finds that the category or subcategory presents a threat of adverse effects to human health or the environment in a manner ''that warrants regulation under section 112.'' Thus, EPA must determine whether the category or subcategory presents a threat that warrants regulation under section 112. If EPA determined that the listing criteria for a category of area sources were not met, nothing would preclude EPA from regulating HAP from that category under section 111(d), which contains different requirements for regulation. See General Overview of section 111 above.

Another commenter argued that EPA's interpretation of the two amendments is contrary to a canon of statutory construction that provides that where a conflict exists between two provisions of an act, the last provision in point of arrangement controls. This commenter argues that because the Senate conforming amendment is found in section 302 of Public Law 101–549, and the House amendment in section 108(g), the Senate amendment should control. As explained above, this canon of statutory construction is not directly relevant to situations where the conflict at issue is between two different amendments to the same statutory provision. Furthermore, application of this canon of construction would be contrary to the legislative history described above.

therefore occupies the field in section 112 with regard to Utility Units. Section 112(n)(1)(A) provides EPA significant discretion in making the appropriate and necessary finding and nothing in section 112(n)(1)(A) suggests that EPA cannot revise its finding, where, as here, it has both identified errors in its prior finding and determined that the finding lacked foundation, and where EPA has received new information that confirms that it is not appropriate or necessary to regulate coal- and oil-fired Utility Units under section 112.[65]

The section 112(c)(9) criteria also do not apply in two situations that are directly relevant here. First, the December 2000 appropriate and necessary finding and associated listing are not final agency actions. *UARG* v. *EPA,* 2001 WL 936363, No. 01–1074 (DC Cir. July 26, 2001). EPA therefore has inherent authority under the CAA to revise those actions at any time based on either identified errors in the December 2000 finding or on new information that bears upon that finding. Second, as explained in the proposed rule, the section 112(c)(9) criteria do not apply where, as here, the source category at issue did not meet the statutory criteria for listing at the time of listing. See 68 FR 28197, 28200 June 4, 1996; see also 69 FR 4689 (citing additional examples where EPA has removed a source category from the section 112(c) list without following the criteria in section 112(c)(9) due to an error at the time of listing). For all of the reasons noted above, EPA did not meet the statutory listing criteria at the time of listing for coal- and oil-fired Utility Units. Accordingly, coal- and oil-fired Utility Units should never have been listed under section 112(c) and therefore the criteria of section 112(c)(9) do not apply to today's action.

## IX. Statutory and Executive Order Reviews

### *A. Executive Order 12866: Regulatory Planning and Review*

Under Executive Order 12866 (58 FR 51735, October 4, 1993), the Agency must determine whether a regulatory action is ''significant'' and therefore subject to Office of Management and Budget (OMB) review and the requirements of the Executive Order. The Order defines ''significant regulatory action'' as one that is likely to result in a rule that may:

1. Have an annual effect on the economy of $100 million or more or adversely affect in a material way the economy, a sector of the economy, productivity, competition, jobs, the environment, public health or safety, or State, local, or Tribal governments or communities;

2. Create a serious inconsistency or otherwise interfere with an action taken or planned by another agency;

3. Materially alter the budgetary impact of entitlements, grants, user fees, or loan programs or the rights and obligations of recipients thereof; or

4. Raise novel legal or policy issues arising out of legal mandates, the President's priorities, or the principles set forth in the Executive Order.

Pursuant to the terms of Executive Order 12866, OMB has notified us that it considers this a ''significant regulatory action'' within the meaning of the Executive Order. We have submitted this action to OMB for review. However, EPA has determined that this rulemaking will not have a significant economic impact. Changes made in response to OMB suggestions or recommendations will be documented in the public record. All written comments from OMB to EPA and any written EPA response to any of those comments are included in the docket listed at the beginning of this notice under **ADDRESSES.**

### *B. Paperwork Reduction Act*

This action does not contain any information collection requirements and therefore is not subject to the Paperwork Reduction Act (44 U.S.C. 3501 *et seq.*).

### *C. Regulatory Flexibility Act*

The Regulatory Flexibility Act (5 U.S.C. 601 *et seq.*) (RFA), as amended by the Small Business Regulatory Enforcement Fairness Act (Pub. L. 104–121) (SBREFA), provides that whenever an agency is required to publish a general notice of rulemaking, it must prepare a regulatory flexibility analysis, unless it certifies that the rule, if promulgated, will not have ''a significant economic impact on a substantial number of small entities.'' 5 U.S.C. 605(b). Small entities include small businesses, small organizations, and small governmental jurisdictions.

As was discussed in the January 30, 2004 NPR, EPA determined that it was not necessary to prepare a regulatory flexibility analysis in conjunction with this rulemaking. We certify that this action will not have a significant impact on a substantial number of small entities because it imposes no regulatory requirements.

### *D. Unfunded Mandates Reform Act*

Title II of the Unfunded Mandates Reform Act of 1995 (Pub. L. 104–4) (UMRA), establishes requirements for Federal agencies to assess the effects of their regulatory actions on State, local, and Tribal governments and the private sector. Under UMRA section 202, 2 U.S.C. 1532, EPA generally must prepare a written statement, including a cost-benefit analysis, for any proposed or final rule that ''includes any Federal mandate that may result in the expenditure by State, local, and Tribal governments, in the aggregate, or by the private sector, of $100,000,000 or more * * * in any one year.'' A ''Federal mandate'' is defined under section 421(6), 2 U.S.C. 658(6), to include a ''Federal intergovernmental mandate'' and a ''Federal private sector mandate.'' A ''Federal intergovernmental mandate,'' in turn, is defined to include a regulation that ''would impose an enforceable duty upon State, local, or Tribal governments,'' section 421(5)(A)(i), 2 U.S.C. 658(5)(A)(i), except for, among other things, a duty that is ''a condition of Federal assistance,'' section 421(5)(A)(i)(I). A ''Federal private sector mandate'' includes a regulation that ''would impose an enforceable duty upon the private sector,'' with certain exceptions, section 421(7)(A), 2 U.S.C. 658(7)(A).

We have determined that the final rule does not contain a Federal mandate that may result in expenditures of $100 million or more for State, local, or tribal governments, in the aggregate, or the private sector in any 1 year. Thus, today's final rule is not subject to the requirements of sections 202 and 205 of the UMRA. In addition, we have determined that the final rule contains no regulatory requirements that might significantly or uniquely affect small governments because it contains no regulatory requirements that apply to such governments or impose obligations upon them. Therefore, the final rule is not subject to the requirements of section 203 of UMRA.

### *E. Executive Order 13132: Federalism*

Executive Order 13132, entitled ''Federalism'' (64 FR 43255, August 10, 1999), requires EPA to develop an accountable process to ensure ''meaningful and timely input by State and local officials in the development of regulatory policies that have federalism implications.'' ''Policies that have federalism implications'' is defined in the EO to include regulations that have

[65] Although not critical to our analysis, we do note that it is questionable whether we even had a legal obligation in December 2000 to list Utility Units under section 112(c) after making the positive appropriate and necessary finding. Section 112(n)(1)(A) makes no reference to CAA section 112(c) and the framework of section 112(c)(1) and (c)(3) does not expressly provide for the listing of Utility Units. Rather, those provisions speak to major and area sources, which Congress treated differently from Utility Units.

''substantial direct effects on the States, on the relationship between the national government and the States, or on the distribution of power and responsibilities among the various levels of government.''

This rule does not have federalism implications. It will not have substantial direct effects on the States, on the relationship between the national government and the States, or on the distribution of power and responsibilities among the various levels of government, as specified in EO 13132. The CAA establishes the relationship between the Federal government and the States, and this rule does not impact that relationship. Thus, EO 13132 does not apply to this rule. However, in the spirit of EO 13132, and consistent with EPA policy to promote communications between EPA and State and local governments, EPA specifically solicited comment on this rule from State and local officials.

*F. Executive Order 13175: Consultation and Coordination With Indian Tribal Governments*

EO 13175, entitled ''Consultation and Coordination with Indian Tribal Governments'' (65 FR 67249, November 9, 2000), requires EPA to develop an accountable process to ensure ''meaningful and timely input by Tribal officials in the development of regulatory policies that have Tribal implications.''

This rule does not have Tribal implications as defined by EO 13175. It does not have a substantial direct effect on one or more Indian Tribes, in that it is a determination not to regulate utilities under section 112, and therefore imposes no burdens on tribes. Furthermore, this rule does not affect the relationship or distribution of power and responsibilities between the Federal government and Indian Tribes. The CAA and the Tribal Authority Rule (TAR) establish the relationship of the Federal government and Tribes in implementing the Clean Air Act. Because this rule does not have Tribal implications, EO 13175 does not apply.

Although EO 13175 does not apply to this rule, EPA took several steps to consult with Tribal officials in developing this rule. EPA gave a presentation to a national meeting of the Tribal Environmental Council (NTEC) in April 2001, and encouraged Tribal input at an early stage. EPA then worked with NTEC to find a Tribal representative to participate in the workgroup developing the rule, and included a representative from the Navajo Nation as a member the official workgroup, with a representative from the Campo Band later added as an alternate. In March 2004, EPA provided a briefing for Tribal representatives and the newly formed National Tribal Air Association and NTEC. EPA received comments on this rule from a number of tribes, and has taken those comments and other input from Tribal representatives into consideration in development of this rule.

*G. Executive Order 13045: Protection of Children From Environmental Health and Safety Risks*

Executive Order 13045, ''Protection of Children from Environmental Health and Safety Risks'' (62 FR 19885, April 23, 1997) applies to any rule that (1) is determined to be ''economically significant'' as defined under EO 12866, and (2) concerns an environmental health or safety risk that EPA has reason to believe may have a disproportionate effect on children. If the regulatory action meets both criteria, section 5–501 of the EO directs the Agency to evaluate the environmental health or safety effects of the planned rule on children, and explain why the planned regulation is preferable to other potentially effective and reasonably feasible alternatives considered by the Agency.

The final rule is not subject to Executive Order 13045 because it is not an economically significant regulatory action as defined by Executive Order 12866. In addition, EPA interprets Executive Order 13045 as applying only to those regulatory actions that are based on health and safety risks, such that the analysis required under section 5–501 of the Executive Order has the potential to influence the regulations. The final rule is not subject to Executive Order 13045 because it does not include regulatory requirements based on health or safety risks.

Nonetheless, in making its determination as to whether it is ''appropriate and necessary'' to regulate Utility Units under section 112, EPA considered the effects of utility HAP emissions on both the general population and sensitive subpopulations, including children.

*H. Executive Order 13211: Actions Concerning Regulations That Significantly Affect Energy Supply, Distribution, or Use*

Executive Order 13211 (66 FR 28355, May 22, 2001) provides that agencies shall prepare and submit to the Administrator of the Office of Regulatory Affairs, OMB, a Statement of Energy Effects for certain actions identified as ''significant energy actions.'' Section 4(b) of EO 13211 defines ''significant energy actions'' as ''any action by an agency (normally published in the **Federal Register**) that promulgates or is expected to lead to the promulgation of a final rule or regulation, including notices of inquiry, advance notices of final rulemaking, and notices of final rulemaking: (1) (i) That is a significant regulatory action under EO 12866 or any successor order, and (ii) is likely to have a significant adverse effect on the supply, distribution, or use of energy; or (2) that is designated by the Administrator of the Office of Information and Regulatory Affairs as a ''significant energy action.'' Although this final rule is a significant regulatory action under EO 12866, it will not have a significant adverse effect on the supply, distribution, or use of energy.

*I. National Technology Transfer and Advancement Act*

Section 12(d) of the National Technology Transfer and Advancement Act (NTTAA) of 1995 (Pub. L. 104–113; Section 12(d), 15 U.S.C. 272 note) directs EPA to use voluntary consensus standards (VCS) in their regulatory and procurement activities unless to do so would be inconsistent with applicable law or otherwise impractical. Voluntary consensus standards are technical standards (*e.g.*, materials specifications, test methods, sampling procedures, business practices) developed or adopted by one or more voluntary consensus bodies. NTTAA directs EPA to provide Congress, through annual reports to OMB, with explanations when an agency does not use available and applicable VCS.

This action does not involve technical standards and therefore the NTTAA does not apply.

*J. Executive Order 12898: Federal Actions To Address Environmental Justice in Minority Populations and Low-Income Populations*

Executive Order 12898, ''Federal Actions to Address Environmental Justice in Minority Populations and Low-Income Populations,'' provides for Federal agencies to consider the impact of programs, policies, and activities on minority populations and low-income populations, including tribes.

As described above, in making its determination as to whether it is ''appropriate and necessary'' to regulate Utility Units under section 112, EPA considered the effects of utility HAP emissions on both the general population and sensitive subpopulations, including subsistence fish-eaters. EPA's analysis considered such subpopulations as the Chippewa in Minnesota, Wisconsin, and Michigan; and the Hmong in Minnesota and

Wisconsin. As explained above, the Agency has concluded that it is not ''appropriate and necessary'' to regulate Utility Units under section 112, in light of all available information, including information on subsistence fish-eaters. The Agency believes that implementation of the CAIR and, independently, the CAMR will remove the hazards to public health resulting from utility HAP emissions.

This action, however, does not actually regulate HAP emissions from utilities. The CAMR does regulate Hg emissions from utilities, and it is in the CAMR rulemaking that EPA has addressed the impacts of that regulation on the populations addressed by Executive Order 12898.

*K. Congressional Review Act*

The Congressional Review Act, 5 U.S.C. 801 *et seq.,* as added by SBREFA of 1996, generally provides that before a rule may take effect, the agency promulgating the rule must submit a rule report, which includes a copy of the rule, to each House of the Congress and to the Comptroller General of the U.S. The EPA will submit a report containing this rule and other required information to the U.S. Senate, the U.S. House of Representatives, and the Comptroller General of the U.S. prior to publication of the rule in the **Federal Register**. The final rule is not a ''major rule'' as defined by 5 U.S.C. 804(2). The final rule will be effective on March 29, 2005.

Dated: March 15, 2005.

**Stephen Johnson,**

*Acting Administrator.*

[FR Doc. 05–6037 Filed 3–28–05; 8:45 am]

BILLING CODE 6560–50–P

Federal Register

Tuesday,
March 29, 2005

# Part III

# Department of Defense

## Office of the Secretary

## 32 CFR Part 184

## Contractors' Safety for Ammunition and Explosives; Proposed Rule

**DEPARTMENT OF DEFENSE**

**Office of the Secretary**

**32 CFR Part 184**

**RIN 0790–AH76**

**[DoD 4145.26–M]**

## Contractors' Safety for Ammunition and Explosives

**AGENCY:** Office of the Secretary of Defense.

**ACTION:** Proposed rule for comment.

**SUMMARY:** The Department of Defense (DoD) is codifying its revised explosives safety standards for ammunition and explosives (A&E) work performed under DoD contracts. This proposed rule is necessary to minimize the potential for mishaps that could interrupt DoD operations, delay project completion dates, adversely impact DoD production base or capability, damage or destroy DoD-owned material/equipment, cause injury to DoD personnel, or endanger the general public. The benefits of this proposed rule in terms of the protection of the public and ensuring contract performance are expected to balance its potential cost or administrative impacts. Only provisions related to conventional AE operations have been included in this proposed rule. No attempt was made to encompass general industrial safety, occupational health concerns, chemical warfare agents, radiation, or over-the-road transportation requirements, because these are either the responsibility of other regulatory agencies (for example DOT, DOL/OSHA, or NRC) or may be addressed elsewhere in the contract by the procuring activity. Budgetary effects of this proposed rule are minimal since existing DoD Federal Acquisition Regulation Supplement coverage already requires compliance with safety requirements in AE solicitations and contracts. Finally, because this proposed rule is needed to minimize the potential for AE mishaps that could adversely impact DoD and the public, timely publication in the **Federal Register** is important.

**DATES:** Comments are to be received not later than May 31, 2005.

**FOR FURTHER INFORMATION CONTACT:** Dr. Jerry M. Ward, Director, Engineer Technical Programs Division, DDESB, telephone (703) 325–2525, fax: (703) 325–6227; e-mail: *Jerry.Ward@DDESB.OSD.mil*.

**SUPPLEMENTARY INFORMATION:** Pursuant to the authority vested in the Secretary of Defense in accordance with 10 U.S.C. 172, DoD Directive 6055.9 established the Department of Defense Explosives Safety Board as a joint activity of the Department of Defense subject to the direction, authority and control of the Secretary of Defense. The majority of the standards impacting upon the public were adopted prior to the enactment of the Administrative Procedure Act. This proposed rule is intended to ensure public awareness of the extent of the explosives safety standards as well as offer the public an opportunity to comment on the standards. The information addresses the HCSDS sometimes furnished with solicitations or contracts to provide an insight into potentially hazardous characteristics of the materials involved in the production of the item addressed in the solicitation. Contractors retain the ultimate responsibility for assuring the safety of their personnel and establishment. Information provided by the HCSDS is derived from other sources. Verification of such data as shipping and storage hazard division and storage compatibility group information must be done through the DoD Joint Hazard Classification System (JHCS) or Title 49, Code of Federal Regulations.

These classifications pertain to AE packaged for transportation or storage. Such hazard classification information may not be valid when applied to the hazards associated with manufacturing or loading processes. For such processes, the materials and processes must be analyzed on a case-by-case basis. Sources of information to support this analysis are available from service research and development organizations through contract channels and other sources.

### Executive Order 12866

This proposed rule does not:

(1) Have an annual effect of the economy of $100 million or more or adversely affect in a material way the economy, a sector of the economy, productivity, competition, jobs, the environment, public health or safety, or state, local, or tribal governments.

(2) Create a serious inconsistency or otherwise interfere with an action taken or planned by another agency.

(3) Materially alter the budgetary impact of entitlement, grants, user fees, or loan programs or the rights and obligations of recipients thereof; or

(4) Raise novel legal or policy issues arising out of legal mandates, the President's priorities, or the principles set forth in this Executive Order.

### Regulatory Flexibility Act of 1980 (5 U.S.C. 605(b))

Regulatory Flexibility Act. It has been certified that this proposed rule, if promulgated, shall be exempt from the requirements under 5 U.S.C. 601–612. This proposed rule does not have a significant economic impact on small entities as defined in the Act.

### Unfunded Mandates Act of 1995 (Sec. 202, Pub. L. 104–4)

This proposed regulatory action does not contain a Federal mandate that will result in the expenditure by State, local, and tribal governments, in aggregate, or by the private sector of $100 million or more in any one year.

### Paperwork Reduction Act of 1995 (44 U.S.C. Chapter 35)

Paperwork Reduction Act. The proposed rule imposes no obligatory information requirements beyond internal Department of Defense needs.

### Federalism (Executive Order 13132)

This proposed regulatory action does not have federalism implications, as set forth in Executive Order 13132. It will not have substantial direct effects on the States, on the relationship between the national government and the States, or on the distribution of power and responsibilities among the various levels of government.

### Section 202, Public Law 104–4, "Unfunded Mandates Reform Act"

It has been determined that this rule does not involve a Federal mandate that may result in the expenditure by State, local and tribal governments, in the aggregate, or by the private sector, of $100 million or more and that such rulemaking will not significantly or uniquely affect small governments.

### List of Subjects in 32 CFR Part 184

Ammunition and explosives, DoD contractors.

Accordingly, 32 CFR part 184 is proposed to be added to read as follows:

## PART 184—DOD CONTRACTORS' SAFETY MANUAL

Sec.

184.1 Introduction.
184.2 Mishap investigation and reporting.
184.3 General safety requirements.
184.4 Quantity-distance and siting.
184.5 Hazard classification, storage principles, and compatibility groups.
184.6 Electrical safety requirements for AE facilities.
184.7 Manufacturing and processing propellants.
184.8 Safety requirements for manufacturing and processing pyrotechnics.
184.9 Storage of ammunition and explosives.
184.10 Fire protection.
184.11 Risk identification and management.

184.12 AE building design and layout.
184.13 Safety requirements for specific AE and AE operations.
184.14 Test and testing requirements.
184.15 Collection and destruction requirements for AE.
184.16 Construction and siting criteria.
Appendix A to 32 CFR Part 184—Glossary

**Authority:** 10 U.S.C. 172.

**§ 184.1 Introduction.**

(a) *Purpose.* This part provides safety requirements, guidance and information to minimize potential mishaps which could interrupt Department of Defense (DoD) operations, delay production, damage DoD property, cause injury to DoD personnel, or endanger the public during contract work or services involving ammunition and explosives (AE). The part contains the minimum contractual safety requirements to support the objectives of DoD. These requirements are not a complete safety program and this part does not relieve a contractor from complying with Federal, State and local laws and regulations.

(b) *Applicability.* These safety requirements apply to contractors performing AE work or AE services on DoD contracts, subcontracts, purchase orders, or other procurement methods. The requirements also apply to non-DoD contractor operations to the extent necessary to protect DoD work or services.

(c) *Mandatory and advisory requirements.* The part uses the term ''shall'', or an affirmative statement, to indicate mandatory requirements. The terms ''should'' and ''may'' are advisory. When advisory provisions are not met, adverse consequences might develop and become proximate causes of AE mishaps.

(d) *Compliance with mandatory requirements.* (1) The Department of Defense requires compliance with mandatory provisions of this part and applicable portions of DoD 6055.9–STD.[1] Siting criteria for AE are provided in quantity distance (Q–D) standards contained in Chapter 9 of DoD 6055.9–STD. In order to provide consistent and current information to all DoD AE contractors, Q–D requirements of DoD 6055.9–STD are incorporated by reference in paragraph C317.

(2) *Waivers.* Procuring contracting officers (PCO) may grant contract-specific waivers to mandatory provisions of this part. Rationale for waiver of DoD pre-award safety surveys must be documented and provided to the cognizant ACO for transmittal to the cognizant DoD Component explosives safety office for their records. Military or commercial ammunition and explosives shall not be procured unless their use is authorized by the cognizant DoD Component explosives safety approval authority. Methods of addressing non-compliance with mandatory requirements and requests for waivers are different during the pre- and post-award phases of a contract.

(3) In the *pre-award phase*, the PCO will request a DoD pre-award safety survey to help determine contractor capability. During pre-award surveys, noncompliance with mandatory safety requirements normally results in a recommendation of ''no award.'' Any noncompliance should be resolved during the pre-award survey. Contractors may choose to correct the deficiencies immediately, may offer a letter of intent to correct the deficiencies (which will become binding upon award of contract), or may request that the PCO accept specifically identified existing conditions of facilities (contract-specific waiver).

(4) In the *post-award phase*, the contractor has 30 days from the date of notification by the administrative contracting officer (ACO) to correct the noncompliance and inform the ACO of the corrective actions taken. The contracting officer may direct a different time period for the correction of any noncompliance. If the contractor refuses or fails to correct any noncompliance within the time period specified by the ACO, the Government has the right to direct the contractor to cease performance on all or part of affected contracts. When the contractor cannot comply with the mandatory safety requirements of the contract, the contractor will develop and submit a request for a waiver through the ACO to the PCO for the final determination. The request will contain complete information concerning the requirements violated, actions planned to minimize the hazard, and a proposed date for correction of the deficiency.

(e) *Pre-award safety survey.* DoD safety personnel conduct pre-award surveys to evaluate each prospective contractor's ability to comply with contract safety requirements. The pre-award safety survey is also an opportunity for the contractor to request clarification of any safety requirement or other AE issue that may affect the contractor's ability to comply. During pre-award surveys, the contractor shall provide the following:

(1) Site plans conforming to paragraphs (h)(5)(i) through (h)(5)(iv) of this section for proposed facilities to be used in contract performance.

(2) Evidence of implementation of a safety program containing at least mandatory requirements described in § 184.3.

(3) General description of proposed contract facilities, including size, building layouts, construction details, and fire resistive capabilities.

(4) Fire prevention program and available firefighting resources including local agreements or other documentation demonstrating coordination.

(5) Copies of required licenses and permits or demonstration of the ability to obtain approvals necessary to support the proposed contract.

(6) A safety history including mishap experience, safety survey or audit reports by insurance carriers or Federal, State, and local authorities, and any variances, exemptions or waivers of safety or fire protection requirements issued by Federal, state or local authorities.

(7) Details of proposed operations and equipment to include process flow narrative/diagram, proposed facility or equipment changes, hazard analysis, and proposed procedures for all phases of AE operations.

(8) *Subcontractor information.* (i) Identification of all subcontractors proposed for the AE work.

(ii) Methods used to evaluate capability of subcontractor to comply with the requirements of this part.

(iii) Methods used to manage subcontractor compliance.

(f) *Preoperational safety survey.* The DoD reserves the right to conduct a preoperational survey after contract award of new items with limited contractor experience, after major new construction or major modifications, or after an AE mishap. When these situations occur, the contractor shall notify the ACO, sufficiently in advance, to provide the Department of Defense the opportunity to schedule and perform a preoperational survey.

(g) *Post-award contractor responsibilities.* The contractor shall:

(1) Comply with the requirements of this part and any other safety requirements contained within the contract.

(2) Develop and implement a demonstrable safety program, including operational procedures, intended to prevent AE-related mishaps.

(3) Designate qualified individuals to administer and implement this safety program.

(4) Prepare, and keep available for review, all hazard analyses used to justify alternative methods of hazards control that differ from those recommended in this part.

[1] Copies may be obtained via Internet at *http://www.dtic.mil/whs/directives.*

(5) Provide access to facilities and safety program documentation to Government safety representatives.

(6) Report and investigate AE mishaps in accordance with § 184.2.

(7) Provide identification and location of subcontractors to the ACO for notification or approval in accordance with terms of the contract.

(8) Establish and implement management controls to ensure AE subcontractors comply with paragraphs (g)(1) through (g)(7) of this section.

(h) *Site and construction plans.* (1) Contractors must prepare site and construction plans for support of the pre-award process, and for any change in layout or construction potentially affecting Q–D incident to the contract. Contractors shall also maintain a current site map depicting Q–D relationships for all AE locations within the facilities.

(2) When the place of performance of the contract is at a DoD-owned facility, site and construction plans shall be prepared and processed (content and staffing) in accordance with the requirements of DoD 6055.9–STD, as well as, appropriate military service regulations contained within the contract.

(3) For contractor-owned, contractor-operated (COCO) facilities, the contractor shall submit, through the ACO to the PCO, site and construction plans for all new construction or major modification of facilities for AE activities and for the facilities that may be exposed to AE hazards if improperly located. The contractor shall provide sufficient copies for the review process. The contractor shall not begin construction or modification of proposed facilities until receiving site and construction plan approval from the PCO through the ACO.

(4) Minor new construction, changes, and modifications of existing AE facilities involving Hazard Class/Division (HC/D) additions and deletions or that add or remove small portable operating buildings and magazines may not require formal site plan submission. Minor applies to all changes that involve only 1.4 HC/D materials. Minor also applies to changes of other HC/D materials that do not increase the existing maximum credible event (MCE) for an AE facility or do not extend any quantity distance arcs beyond existing fragment, inhabited building, and public traffic route distance arcs for other nearby potential explosion sites (PES). When the contractor thinks a modification/change is minor, he shall notify the ACO and request a determination. The ACO shall make the final determination as to whether a formal site plan submission is necessary.

(5) Site plans shall comply with the following:

(i) Plans shall include maps and drawings which are legible, accurate, and of a scale which permits easy determination of essential details. For general layout of buildings, this is normally a scale of 1 inch to 400 feet (or metric equivalent) or less. Site plans may require other-scaled drawings, which provide details of construction, structure relationships within the project area, barricades, or other unique details. Plans may also include pictures to illustrate details and videotapes of MCE testing data.

(ii) Maps and drawings shall identify distances between all PESs, all exposed sites (ESs) within the facility, the facility boundary, any additional property under contractor control, ESs on adjacent property when applicable, public railways and highways, power transmission lines and other utilities.

(iii) Plans shall identify and briefly describe all PESs and all ESs within any applicable fragmentation distance and/or inhabitable building distance of a PES. Site plans for major new construction or modification shall also identify and briefly describe all PESs whose inhabitable building distance are includes the proposed new or modified site.

(iv) Plans shall include the maximum net explosive weight(s) (NEW) and the HC/Ds of all PESs and, when applicable, shall include MCE information and maximum NEW for each room or bay. Plans shall also include engineering or test data when substituting construction or shielding for distance to protect from fragmentation or overpressure.

(v) Plans shall include a topographical map in sufficient detail to permit evaluation, when the contractor uses natural terrain for barricading to reduce fragment distance.

(6) Construction plans for proposed facilities shall contain the information required in paragraphs (h)(5)(i) through (h)(5)(v) of this section and construction details of dividing walls, venting surfaces, firewalls, roofs, operational shields, barricades, exits, ventilation systems and equipment, AE waste disposal systems, lightning protection systems, grounding systems, processing equipment auxiliary support structures, and, general materials of construction, as applicable.

**§ 184.2 Mishap investigation and reporting.**

(a) *General.* This section contains requirements for investigating and reporting mishaps involving AE.

(b) *Reporting criteria.* The contractor shall investigate and report to the ACO and cognizant Defense Contract Management Agency (DCMA) contract safety specialist all mishaps involving ammunition or explosives that result in one or more of the following:

(1) One or more fatalities.

(2) One or more lost-work day cases with days away from work as defined by 29 U.S.C. 651–678.

(3) Five or more non-fatal injuries (with or without lost workdays).

(4) Damage to government property exceeding $20,000.

(5) Delay in delivery schedule exceeding 24 hours. (This requirement does not constitute a waiver or amendment of any delivery schedule required by the contract.).

(6) Contractually required notifications of mishaps other than in paragraphs (b)(1) through (b)(5) of this section; or

(7) Any mishap that may degrade operational or production capability, or is likely to arouse media interest.

(c) *Mishap investigation requirements.* Paragraph (e) of this section contains the elements of information which a basic investigation shall produce. Based upon the seriousness of the mishap and impact on munitions or munitions systems involved, the ACO or PCO may require an additional, more comprehensive investigation. The PCO retains the right to participate in contractor investigations, or to perform an independent DoD investigation. In the event the PCO directs DoD participation, or an independent DoD investigation, the contractor shall preserve the mishap scene, taking only those actions necessary to protect life and health, preclude further damage, or prevent access by unauthorized persons in order to preserve investigative evidence. The contractor shall obtain the PCO's permission to disturb the evidence, with the exception of paragraph (b)(2) of this section. Nothing in the reporting requirements contained in this part relieve the contractor of making other notifications required by Federal, State, or local requirements.

(d) *Telephone report.* The contractor shall report any mishap described in paragraph (b) of this section by telephone to the ACO and cognizant DCMA contract safety specialist as soon as practicable, but not later than three hours after the mishap.

(e) *Written report.* (1) The contractor shall submit a written report to the ACO and cognizant DCMA contract safety specialist by the end of the second business day after mishap occurrence.

(i) Contractor's name and location.

(ii) Date, local time, and plant facility/location of the mishap.

(iii) Type of mishap (explosion, fire, loss, other).

(iv) Contract, subcontract, or purchase order.

(v) Item nomenclature, hazard classification, lot number.

(vi) Mishap narrative.

(vii) Number of injuries, fatalities, degree of injuries. (viii) Description of property damage and cost.

(ix) Quantity of energetic material involved (pounds, units, rounds).

(x) Probable cause(s).

(xi) Corrective action taken or planned.

(xii) Effect on production.

(xiii) Name, title or position, and phone number of person submitting the report.

(xiv) Remarks.

(2) The contractor shall provide to the ACO supplemental information to the initial report within 30 days of mishap occurrence.

(f) *Special technical mishap investigations and reports.* When warranted by the circumstances of a mishap, the PCO may require a special technical investigation conducted by DoD personnel. The PCO may also direct the contractor to conduct a special technical investigation. In either case, the investigation report shall provide details such as fragmentation maps, photographs, more detailed description of events of the mishap, effects on adjacent operations, structural and equipment damage, Q–D drawings, detailed description of occurrence and related events, findings and conclusions. If the contractor performs the special technical mishap investigation, the contractor shall forward the report through the ACO to the PCO within 60 days of the direction by the PCO to perform the investigation. Upon determination by the PCO that a DoD investigation is required, the PCO will immediately advise the contractor.

**§ 184.3 General safety requirements.**

(a) *General.* This section provides general safety requirements for all AE operations addressed in this part. When these practices exceed or differ from local or national codes or requirements, the more restrictive shall apply.

(b) *Personnel and material limits.* (1) Control of all locations or operations presenting real or potential hazards to personnel, property, or the environment is essential for safety and efficiency. Control measures include minimizing the number of personnel exposed, minimizing the duration of the exposure, and minimizing the amount of hazardous material consistent with safe and efficient operations.

(2) All buildings, cubicles, cells, rooms, and locations containing AE shall have AE and personnel limits prominently posted. Include supervisors, production workers, and transient personnel when determining personnel limits. Posted personnel limits are not required in storage magazines, magazine areas, or transfer points.

(3) All buildings, cubicles, cells, rooms or locations containing AE shall have prominently posted limits for the quantities of AE permitted. The posted limits shall not exceed the quantity stipulated in the site plan, and shall accurately reflect current process requirements. Post AE limits in storage magazines when the limit differs from that for other magazines in the block, or when circumstances prevent the limit from being readily apparent. It is not required to express AE limits in units of weight or in the number of items. Express limits in terms of trays, boxes, racks, or other units more easily observed and controlled.

(c) *Standard operating procedures (SOP).* (1) Clearly written procedures are essential to avoid operator errors and ensure process control. Therefore, before commencing manufacturing operations involving AE, qualified personnel shall develop, review, and approve written procedures.

(2) *Preparation.* The contractor shall prepare and implement written procedures which provide clear instructions for safely conducting AE activities. The use of controlled tests is an acceptable method for developing and validating SOPs. SOPs shall include the following:

(i) The specific hazards associated with the process.

(ii) Indicators for identifying abnormal process conditions.

(iii) Emergency procedures for abnormal process conditions or other conditions which could affect the safety of the process.

(iv) Personal protective clothing and equipment required by process personnel.

(v) Personnel and AE limits.

(vi) Specific tools permitted for use by the process operator.

(vii) The chronological sequence of job steps the operator is to follow in performing the work.

(viii) Procedures for disposing of any scrap and waste AE.

(3) *Dissemination.* Personnel involved with AE processes, and personnel who maintain AE equipment, shall have written operating procedures readily accessible.

(4) *Training.* Personnel shall receive appropriate training before performing work involving exposure to AE. The training shall include emphasis on the specific safety and health hazards, emergency operations including shutdown, and safe work practices applicable to the employee's job tasks. The contractor shall ascertain that each employee involved in an AE process has received and understood the training. The contractor shall prepare a record that contains the identity of the employee, the date of training, and the means used to verify that the employee understood the training.

(5) *Emergency procedures.* The contractor shall instruct employees on procedures to follow in the event of electrical storms, utility or mechanical failures, equipment failures, process abnormalities, and other emergencies occurring during the manufacturing, handling, or processing of AE.

(6) *Revalidation.* Qualified personnel shall review SOPs on a regular basis. The managing authority shall change and validate SOPs as often as necessary to reflect improved methods, equipment substitutions, facility modifications, or process revisions.

(d) *Storage in operating buildings.* (1) The contractor may store limited quantities of hazardous materials, other than AE materials, which are essential for current operations in an operating building.

(2) The contractor shall store AE materials that exceed minimum quantity necessary for sustained operations in a service magazine located no closer than the intraline distance (ILD) (based on the quantity in the magazine) from the operating building or area. If ILD distance is not available for a separate service magazine, the contractor may designate storage locations within the operating building. Designated storage locations shall preclude immediate propagation from the operational location to the storage location. The quantity of AE material in the internal storage location shall not exceed that needed for one half of a work shift. The contractor should consider personnel exposure, structural containment afforded, and the venting ability of the proposed storage location when determining where to locate a designated storage location. When storage containers completely contain all fragments, debris, and overpressure, AE material may be stored without regard to Q–D requirements.

(3) At the end of the workday, personnel should remove all AE material from processing equipment and store it in an appropriate magazine or designated storage location. If operationally required, personnel may store in-process AE materials in the

building during non-operating hours provided the physical characteristics and stability of the AE materials are not degraded, and the AE material would not compromise the safety of the process equipment or personnel when the process is restarted.

(4) The contractor may use a separate enclosed room or bay in an operating building specifically adapted for the interim storage of production items awaiting the results of testing before final pack-out. The room or bay must afford the equivalent of service magazine distance protection to other parts of the building, and ILD to other buildings. Such a room or bay is limited to its defined and designed function and items, but is not subject to the four-hour supply limitation for the building or the ultimate pack-out operation.

(e) *Housekeeping in hazardous areas.*

(1) The contractor shall keep structures containing AE clean and orderly.

(2) Explosives and explosive dusts shall not accumulate on structural members, radiators, heating coils, steam, gas, air or water supply pipes, or electrical fixtures.

(3) Written procedures shall include instructions for the removal of spilled material.

(4) Floor cleaning methods shall not create an ignition hazard or alter the conductive ability of floors in AE areas, nor should they result in an environmental contamination potential.

(5) Cleaning methods for AE processing equipment shall not result in any foreign material or AE remaining in the equipment.

(f) *Precautions for maintenance and repairs to equipment and buildings.* (1) The contractor shall examine and test all new or repaired AE processing equipment prior to placing the equipment in service in order to ensure that it is safe to operate.

(2) Before proceeding with maintenance or repairs to AE processing equipment, contractor personnel shall decontaminate the equipment to the degree necessary to perform the work safely. The contractor shall protect maintenance personnel from the effects of a reaction resulting from AE material in or on other parts of the equipment. Contractor personnel shall tag AE processing equipment before proceeding with repairs. The tag shall identify the decontaminated parts of the equipment, and those parts that contain AE.

(3) The contractor shall have SOPs for maintenance personnel performing work on AE equipment or performing building maintenance, repair, or modification activities in AE areas. The SOPs shall include a provision for inspecting equipment after maintenance work to ensure no tools or foreign materials remain in AE equipment. The SOPs shall identify the specific tools required to perform work on equipment which may contain explosive residues or areas which could have an explosive atmosphere.

(4) Before performing any building repair, modification or maintenance activity, the contractor shall ensure the removal of all AE materials from areas that may pose a hazard. The contractor shall also ensure the decontamination of all places where AE material could accumulate, such as, equipment, crevices, vents, ducts, wall cavities, pipes and fittings.

(g) *Operational shields.* (1) The purpose of operational shields is to prevent propagation of AE material from one AE operation or location to another, protect facilities and equipment, and provide personnel protection. Shields used for these purposes require an evaluation to determine their suitability for their intended purpose. All AE operations and processes require a hazard assessment prior to work performance to determine the type of hazard involved, the level of risk associated with the AE material or item, and the corresponding level of protection required.

(2) The primary hazards that accompany explosions and deflagrations are blast overpressure, fragmentation (primary and secondary) and thermal effects. The hazard assessment shall consider these hazards and the quantity of AE materials, initiation sensitivity, heat output, rate of burning, potential ignition and initiation sources, protection capabilities of shields, various types of protective clothing, fire protection systems, and the acute and chronic health hazards of vapors and combustion products on exposed personnel.

(3) When the hazard assessment indicates an unacceptable probability of explosion or deflagration, conduct operations or processes remotely. When an analysis of the hazard assessment indicates the hazards associated with an explosion or deflagration are controllable by using operational shields, the contractor shall design, install, and use shields which effectively protect personnel from the hazards. Shields complying with MIL–STD–398 are acceptable protection.

(4) The contractor shall test operational shields under conditions that simulate the operational environment. AE materials or items used in the test shall correspond to those that may be involved in a maximum credible event (MCE), plus 25 percent. The contractor shall maintain records of the test that demonstrate the shields will function as planned. Analysis rather than testing of shields may be acceptable on a case-by-case basis.

(5) When the doors of AE processing equipment function as operational shields, interlocking devices are required to prevent the operator from opening the door while the equipment is in operation.

(h) *Protective clothing.* (1) All AE operations require a hazard assessment to determine the need for protective clothing and personal protective equipment. The assessment shall include an evaluation of all hazards and factors contained in paragraph (g)(2) of this section.

(2) The contractor shall provide a changing area for employees who must remove their street clothes to wear protective clothing, such as explosive plant clothing, anti-contamination clothing, impervious clothing, and so forth. To avoid exposing personnel not involved in AE operations to unnecessary risks, employees shall not wear or remove protective clothing from the premises. Employees shall not wear any static producing clothing in areas where static electricity is a hazard.

(3) Explosives plant clothing, generally referred to as powder uniforms, shall have nonmetallic fasteners and be easily removable.

(4) When sending explosives-contaminated clothing to an off-plant laundry facility, the contractor is responsible for informing the laundry of the hazards associated with the contaminants and any special laundering or disposal requirements.

(i) *Material handling equipment.* (1) The contractor shall not refuel gasoline, diesel or liquefied petroleum gas (LPG) powered equipment inside buildings containing AE. Refueling shall take place at least 100 feet from structures or sites containing AE. Doors and windows through which vapors may enter the building shall not be open during refueling. Position refueling vehicles at least 100 feet from structures or sites containing AE during refueling.

(2) Gasoline-, diesel- or LPG-powered equipment shall not be stored in buildings, loading docks, or piers containing AE. The contractor shall store gasoline-, diesel-, and LPG-powered equipment at the appropriate fire protection distance from buildings containing AE.

(3) Gasoline, diesel, and LPG powered equipment shall have spark arrestors. The contractor shall perform and document inspections of the exhaust and electrical systems of the equipment

as necessary to ensure that the systems are functioning within the manufacture's specifications. The contractor shall maintain documentation of the inspections for a period of one year.

(j) *Parking of privately owned vehicles.* (1) Control of parking of privately owned vehicles within an AE establishment minimizes fire and explosion hazards and prevents congestion in an emergency.

(2) Parking lots serving multiple PESs shall not be closer than the ILD from each PES. Parking lots serving a single PES shall not be closer than 100 feet to the associated facility to protect it from vehicle fires, and shall be at least public traffic route distance from unassociated PESs. Parking lots for administration areas shall be located at public traffic route distance from all PESs.

(3) Vehicles shall not obstruct access to buildings by emergency equipment or personnel.

(k) *Ignition sources in hazardous areas.* The contractor shall not permit any nonessential ignition sources in operating buildings.

(l) *Operational explosives containers.* (1) Containers shall be compatible with the material they contain.

(2) Containers used for intraplant transportation or storage of process explosives and energetic materials shall not leak. Because of their fragility and potential for fragmentation, glass containers are not acceptable.

(m) *Intraplant rail transportation.* (1) The contractor shall develop written procedures to ensure safe and efficient rail movement of AE. The SOPs shall include information covering the inspection of the engine, car mover, and cars, normal and emergency operating procedures for the engine and car mover, AE loading and unloading procedures, and emergency procedures including fire fighting.

(2) Railcars positioned for loading shall have their brakes engaged to prevent movement. Contractor personnel shall inspect each railcar before loading to ensure it is suitable to carry the specific AE cargo. Contractor personnel shall check the cargo to ensure it is stable and secure, and close the railcar doors before car movement. If using an engine to move railcars, the contractor shall ensure that personnel have connected the air brakes of the railcars in sequence to the engine. If moving a railcar with a car mover the contractor shall station an individual at the hand brake of the railcar.

(3) A single parked railcar shall have the hand brakes set and the wheels chocked. When more than one railcar is parked, personnel shall set hand brakes on enough railcars to ensure the cars will not move. Personnel shall set hand brakes on the downgrade end of a group of parked railcars. Do not rely on the automatic air brakes to hold parked railcars.

(4) Contractor personnel shall avoid rough handling of railcars. Personnel shall not disconnect railcars containing AE from each other or a locomotive while in motion. Personnel shall couple railcars gently in order to avoid damaging the AE cargo or shipping containers. Disconnected railcars shall not strike railcars containing AE.

(5) The contractor shall maintain all rolling stock used for intraplant transportation of AE in a safe and good working condition.

(6) Portable transmitters and railroad locomotives equipped with two-way radios shall not transmit when passing AE operating buildings where electro-explosive devices are in use. The contractor shall determine minimum safe distances based on radio frequency and power output of the transmitter.

(n) *Intraplant motor vehicle transportation of AE.* (1) The contractor shall develop written procedures for the safe transportation of AE in motor vehicles. The SOP shall include procedures for vehicle inspection, vehicle operation, loading and unloading AE materials, and emergency procedures, including fire fighting.

(2) The operator responsible for transporting AE material shall perform a daily inspection of the vehicle before transporting materials. The operator shall verify that the fire extinguisher is charged and in working order, there are no fuels or other fluid leaks, and that brakes, tires, steering, and other equipment are in good operating condition. Before transporting AE, the operator shall inspect the cargo compartment to ensure it does not contain any residual AE material or any object which could present a hazard to the cargo.

(3) When loading or unloading AE, the operator shall shutoff the vehicle's engine, unless the engine is required to provide power to equipment for loading or unloading. The operator shall engage the emergency brake and use wheel chocks when the vehicle could move during loading or unloading. The operator shall stabilize and ensure the load is secure to prevent damage to containers or their contents. The operator shall not transport AE material in the passenger compartment of the vehicle.

(4) The vehicle operator shall understand and follow established procedures involving a vehicle fire, breakdown, accident, damaged or leaking containers, and spilled material.

(5) Transportation containers shall not allow the contents to leak or spill in transit.

(6) Non-sparking material shall cover the cargo compartment when transporting AE in containers capable of exposing their contents if damaged.

(7) Motor vehicles transporting AE within the establishment boundaries but outside the AE area shall bear at least two placards. Placards based on the fire division symbols discussed in § 184.10, ''Fire Protection,'' are acceptable. Motor vehicles or equipment with internal combustion engines, used near explosives scrap, waste, or items contaminated with explosives shall have exhaust system spark arresters and carburetor flame arresters (authorized air cleaners).

(8) The contractor shall maintain vehicles and material handling equipment used to load and transport AE in a safe operating condition.

(9) Batteries and wiring shall be located to prevent contact with containers of AE material.

(o) *Inspection of AE mixing equipment.* (1) The contractor shall establish a preventative maintenance program which includes the inspection of all AE mixing equipment on a periodic basis. The SOP for the inspection shall include criteria for inspecting the blades to bowl clearances, alignment of the blades and bowl, and detection of any distortion of the blades or bowl. The inspection procedures shall also include instructions for checking critical drive system components for wear, damage or misalignment. The procedures shall include criteria for determining that associated equipment used to control the mixer is functioning as designed. The contractor shall maintain a record of all inspections. After performing maintenance of the equipment, the contractor shall run the equipment under load to ensure it is safe to operate.

(2) The SOPs for operating mixing equipment shall include instructions for inspecting specific equipment components before each use.

(p) *Facility requirements.* (1) *Buildings.* The design, construction techniques, process layout, and siting of AE buildings are important considerations in explosives safety and directly influence quantity distance (Q–D) requirements and the degree of exposure to personnel, equipment, and facilities. Construction features which limit the amount of explosives involved, attenuate the resulting blast overpressure or thermal radiation, and reduce the quantity and range of

hazardous fragments and debris will help to minimize the effects of an explosion. Incorporating Q–D criteria, when locating an exposed site (ES) in relation to a potential explosive site (PES), will reduce the amount of damage and injuries in the event of an incident.

(2) *Building exteriors.* The contractor should design and erect AE buildings with the ability to allow for the venting of an internal explosion without collapsing. The use of lightweight materials in exterior wall and roof sections designed to vent the effects of an explosion will help reduce the number of large fragments. Exceptions from using lightweight materials include earth-covered magazines, containment type structures, firewalls, substantial dividing walls, special roof loadings, and walls and roofs used for external overpressure protection. Non-combustible exterior wall and roof coverings of operating buildings help prevent the spread of fire from one area of a building to another and from building to building.

(3) *Interior walls, roofs, and ceilings.* (i) Non-combustible material is preferred for the interior surfaces of buildings. The contractor should treat or cover exposed combustion supporting building materials with fire retardant material.

(ii) Where hazardous locations exist, interior surfaces shall be smooth, free from cracks, crevices and openings which may create a hazardous condition. This is important to prevent the accumulation or migration of explosive dust and vapors which could result in an incident. The National Fire Protection Association (NFPA), Standard 70 [2] provides criteria for determining if a location is hazardous.

(iii) The contractor should use hard gloss, easily cleanable, paint on painted surfaces.

(iv) Periodically clean any surface where explosive dust could accumulate. Establish cleaning schedules on information obtained from the job hazard analysis.

(v) Do not use suspended ceilings in hazardous locations.

(4) *Floors and work surfaces.* (i) Locations where exposed explosives or hazardous concentrations of flammable vapor or gas are present require non-sparking floors and work surfaces.

(ii) § 184.12 provides requirements for conductive non-sparking floors and work surfaces.

(iii) Floors and work surfaces require periodic cleaning to prevent the accumulation of energetic materials. In addition, all conductive and non-sparking floors and work surfaces require preventative maintenance to ensure their functional integrity.

(5) *Substantial dividing walls.* The contractor shall design and construct substantial dividing walls to prevent simultaneous detonation of explosives on opposite sides of the wall. The design and construction shall meet the criteria contained in Army TM 5–1300, Navy NAVFAC P–397, or Air Force AFR 88–22 (different designations for the same publication).

(6) *Exits and doors.* (i) All AE buildings require adequate exits and doors. NFPA Standard No. 101, ''Life Safety Code,'' provides information concerning exits and doors.

(ii) NFPA Standard No. 80, ''Standard for Fire Doors, Fire Windows,'' provides information on the selection and installation of fire doors and windows.

(iii) No AE hazards shall occupy space between an operator and an exit.

(7) *Safety chutes.* Multi-storied locations where rapid egress is vital and not otherwise possible require safety chutes.

(8) *Passageways.* (i) Weather-protected passageways and ramps for travel between buildings or magazines should include features to help prevent fire from spreading from one building to another. Fireproof construction materials, fire stops, fire doors, and fire suppression systems aid in preventing the spread of fire.

(ii) The incorporation of weak sections, openings, or abrupt change in direction of passageways will aid in the prevention of funneling the explosion forces from one building to another.

(9) *Roads and walkways.* (i) Only roads servicing a single magazine or AE processing building, including its service facilities, may dead end at the magazine or building.

(ii) Hard surfaced roads and walkways at the entrances to or between adjacent operating buildings containing AE will help reduce the amount of foreign material tracked into the building by personnel.

(iii) Avoid a road system which requires personnel to pass through an AE area when traveling from one area to another.

(10) *Windows and skylights.* (i) Inhabited building distances do not protect against glass breakage and the hazards of flying glass. Buildings separated by inhabited building distance should not have windows or other glass surfaces exposed to PESs.

(ii) Minimize personnel hazards from glass breakage by means such as building orientation and/or keeping the number of exposed glass panels and panel size to a minimum. When window panels are necessary and risk assessment determines a glass hazard will be present, blast resistant windows must be used. The framing and/or sash of such panels must be of sufficient strength to retain the panel in the structure.

(11) *Hardware.* (i) AE operations and hazardous locations require an evaluation to determine the safest type of hardware and fasteners to use in order to reduce the risk of an accidental ignition. Consider using non-sparking hardware and fasteners if they will meet the design parameters of the intended application. Depending on the potential hazard, a locking device or some other installation technique shall retain the hardware and fasteners securely in place. This will prevent the hardware and fasteners from becoming loose, entering process equipment and creating a spark or pinch point.

(ii) The contractor should avoid installing hardware, pipes, ducts, and other items on blowout panels in order to prevent the materials from becoming secondary fragments. If it is necessary to install items on blowout panels, select items made of materials which will not yield heavy fragments in an explosion.

(12) *Ventilation systems.* (i) Well-designed ventilation systems reduce personnel exposures to airborne contaminants and prevent the accumulation of flammable or explosive concentrations of gases, vapors or dusts. A local ventilation system, which removes the gases, vapors, or dusts at the source, is more effective than a general ventilation system.

(ii) A ventilation system is required in areas of buildings generating potentially explosive dusts, gases or vapors. Testing, inspection, and maintenance of ventilation systems used for contaminant control require documentation.

(iii) Exhaust fans through which combustible dust or flammable vapor pass shall have nonferrous blades or a casing lined with nonferrous material. The electrical wiring and equipment of the system should comply with provisions of NFPA Standard No. 70, ''National Electrical Code''. Bonding and grounding of the entire system is required.

(iv) A slight negative pressure is required in rooms where AE operations generate explosive dust.

(v) NFPA Standard No. 91, ''Standard for Exhaust Systems for Air Conveying of Vapors, Gases, Mists, and Noncombustible Particulate Solids,'' provides standards for exhaust systems.

[2] Obtain NFPA publications from the National Fire Protection Association at *http://www.nfpa.org/catalog/home/index.asp.*

(13) *Steam for processing and heating.* (i) Steam used to heat buildings containing explosives shall not exceed 228 °F (108.9 °C) or have a pressure greater than 5 psi (34.48 kPa).

(ii) Process steam shall not exceed 249.5 °F (120.8 °C), or exceed 15 psi (103.43 kPa). Steam pressure greater than 15 psi (103.43 kPa) requires procuring contracting officer (PCO) approval.

(iii) The surface temperature of steam and hot water pipes in contact with combustible materials shall not exceed 160 °F (71 °C). Pipes with an ambient temperature greater than 160 °F (71 °C) shall not contact combustible materials. An insulating pipe covering capable of reducing the surface temperature of the covering to 160 °F (71 °C) or less is acceptable.

(iv) In AE handling or storage locations where resistance to ground is high, ground steam and hot water lines where they enter the building.

(v) When using a reducing valve, consider installing a relief valve on the low-pressure piping. The throttling action of reducing valves requires a positive means to prevent the production of superheated steam.

(14) *Tunnels.* Tunnels between buildings that contain AE shall incorporate features that resist the shock wave of an explosion. This is important in order to minimize the possibility of an explosion in one building from affecting the operations in the other building. For further information on tunnels go to DoD 6055.9–STD.[3]

(q) *Quantity-distance (Q–D) requirements.* (1) Minimum Q–D requirements are contained in DoD 6055.9–STD, DoD Ammunition and Explosives Safety Standards.

(2) For AE work involving an MCE of 0.25 kg (0.55 lbs) or less of HD 1.1 materials, the use of the separation distances listed in Table 1 to § 184.3 are acceptable for meeting minimum Q–D requirements.

TABLE 1 TO § 184.3.—MINIMUM Q–D REQUIREMENTS FOR SMALL QUANTITIES OF HAZARD DIVISION 1.1 MATERIAL

| Net explosive weight | Inhabited building and fragment distance | Public traffic route and fragment distance | Intraline and fragment distance |
|---|---|---|---|
| Less than 0.003 kg (0.0066 lb) | 0 | 0 | 0. |
| 0.003 kg–0.01 kg (0.0066 lb–0.022 lb) | 5 m (16.5 ft) | 3 m (9.9 ft) | 2 m (6.6 ft). |
| 0.01 kg–0.25 kg (0.022 lb–0.55 lb) | 15 m (49.5 ft) | 9 m (29.7 ft) | 5 m (16.5 ft). |

**§ 184.4 Quantity-distance and siting.**

Refer to DoD 6055.9, Chapter 9 for guidance.

**§ 184.5 Hazard classification, storage principles, and compatibility groups.**

Please refer to DoD 6055.9, Chapter 3 for guidance.

**§ 184.6. Electrical safety requirements for AE facilities.**

(a) *General.* Initiation systems often use the controlled input of electrical energy to initiate explosive mixtures and compounds, which start an explosive train. The uncontrolled release of electrical energy in explosive atmospheres or near explosives and explosive-loaded articles can result in unintended initiation and serious mishaps. Electrical energy manifests itself in many forms (*e.g.*, standard electrical installations, lightning, electrostatic discharge, electrical testing) and with various intensities which require special precautions. This chapter contains minimum electrical safety requirements for existing, new, or modified explosives facilities and equipment.

(b) *Electrical installations.* (1) National Fire Protection Association (NFPA) Standard No. 70 and this section are minimum requirements for areas containing explosives. NFPA Standard No. 70 does not specifically address explosives, but it does establish standards for the design and installation of electrical equipment and wiring in atmospheres containing combustible dusts and flammable vapors and gasses which, in general, are comparably hazardous. NFPA Standard No. 70 (Article 500) defines ''hazardous locations'' according to the hazard presented by electrical equipment installed in environments where flammable gases or vapors, combustible dusts or flyings may exist. The presence of AE may or may not result in rating a particular location as a ''hazardous location.'' The following exceptions shall be used by DoD contractors when applying the NFPA Standard No. 70 definitions of Class I, Division 1, and Class II, Division 1 hazardous locations:

(i) Classify areas containing explosive dusts or explosive substances which may produce dust capable of suspension in the atmosphere as Class II, Division 1 hazardous locations.

(ii) Classify areas where explosive sublimation or condensation may occur as both Class I Division 1 and Class II Division 1 hazardous locations.

(iii) Exceptions are extraordinarily hazardous explosive substances, such as nitroglycerin (NG), which require special consideration, including physical isolation from electric motors, devices, lighting fixtures and the like.

(2) *Multiple classifications.* In some potential explosion sites (PES) (*e.g.*, powder blending with solvents), hazards resulting from both dusts and flammable vapors may exist. In these cases, it is necessary for that area to have a dual, or multiple, classification. Use only electrical equipment listed by Underwriters Laboratories (UL) or other recognized testing laboratory as suitable for use in all classes of hazardous locations.

(3) *Change of classification.* The specific processes performed in operating buildings and magazines dictate the requirements for electrical equipment installation. If functions performed in the facility change, responsible personnel shall inspect, approve, or reclassify the hazardous locations.

(4) *Alternate power source.* Facilities shall have an alternate power source for special processes and operations requiring a continuous supply of power, whenever the loss of power will result in a more hazardous condition.

(5) *Portable engine-driven generators.* The exposed, non-current-carrying, metallic frame and parts shall be electrically grounded. In addition, observe the following requirements when supplying power to magazines or explosives operating facilities.

(i) Place generating units at least 50 ft (15.2 m) from magazines or hazardous (classified) locations.

(ii) Keep the ground area between and around the generator and the NFPA Standard No. 70 hazardous (classified) location clear of debris and other combustible materials.

(iii) The exhaust from the generator shall not impinge on grass or any other combustible material.

(iv) Position the power cord connecting the generator to the load to

[3] See footnote 1 to § 184.1(d)(1).

prevent trucks or personnel from running over or otherwise damaging the cord.

(v) Do not use cable-to-cable splices within a magazine, explosive operating facility, or other NFPA Standard No. 70 hazardous (classified) location. Use only three-wire, three-prong, approved service type plugs and connectors.

(vi) Refer to § 184.3(i)(1) for refueling procedures.

(6) *Electric supply systems.* Electrical and explosives hazards may mutually exist when PES are in close proximity to electric supply lines. To protect these hazards from each other, the following separation requirements shall apply:

(i) Separate overhead service lines from a PES of combustible construction or a PES in the open by the distance between the poles or towers supporting the lines, unless an effective means is provided to ensure that energized lines cannot contact the facility or its appurtenances if they are severed. Four acceptable alternatives are cable trays and messenger lines, a ground-fault circuit-interrupter which causes a disconnecting means to open all ungrounded conductors of the faulted circuit, weighted triangle line separators or similar weights which ensure broken lines fall straight down away from PES, and constructed physical barriers.

(ii) Separate electric distribution lines carrying less than 69 kV, the tower or poles supporting those lines, and unmanned electrical substations from PES by public traffic route distance (PTRD).

(iii) Separate electric transmission lines carrying 69 kV or more and the tower or poles supporting them from PES by:

(A) Inhabited building distance (IBD) if the line in question is part of a grid system serving a large area off the establishment.

(B) PTRD if loss of the line does not create serious social or economic hardships. (**Note:** Base PTRD and IBD on airblast overpressure only. Fragment distances shall not apply.)

(C) Distances in accordance with paragraph (b)(6)(1) of this section when the line(s) in question can be interrupted without loss of power (*i.e.*, other lines or networks exist for rerouting power).

(iv) Avoid locating permanent electric installations in NFPA Standard No. 70 Class I or Class II hazardous locations. When practical operating reasons prevent locating permanent electrical installations outside of hazardous locations, or require the use of portable electrical equipment (*e.g.*, lighting equipment) in hazardous locations, contractors shall only install or use electrical equipment approved for the National Electric Code (NEC) defined ''hazardous location'' and listed by Underwriters Laboratories (UL) or other nationally recognized testing agencies.

(c) *Primary electric supply.* The primary electric supply to an entire explosives area should be arranged to allow cutting off the supply by remote switches located at one or more central points away from the area.

(d) *Ventilation.* Equip exhaust fans, through which combustible dust or flammable vapor pass, with nonferrous blades, or line the casing with nonferrous material. Motors shall meet the proper NEC class for the hazard (NFPA Standard No. 70). Clean and service exhaust systems on a regular schedule. Bond and ground the entire system.

(e) *Lightning protection.* When lightning protection systems are installed, the installation, inspection, and maintenance shall comply with the NFPA Standard No. 780, at a minimum. Typically, six month visual tests and 24-month electrical tests of installed systems are acceptable.

(f) *Static electricity and grounding.* (1) Two unlike materials (at least one of which is non-conductive) produce static electricity due to contact and separation. Contact creates a redistribution of charge across the area of contact and establishes an attractive force. Separation of the materials overcomes these attractive forces and sets up an electrostatic field between the two surfaces. If no conducting path is available to allow the charges to equalize on the surfaces, the voltage difference between the surfaces can easily reach several thousand volts as they separate.

(2) The potential hazard of static electricity arises when an accumulated electrical charge subsequently discharges as a spark in the presence of hazardous atmospheres, flammable vapors, dusts, exposed sensitive explosives, or electro-explosive device (EED). Electrostatic discharge (ESD) does not present a substantial hazard during the handling of most bulk explosive substances if the explosives are in approved containers. It also does not present a hazard near explosives totally contained and unexposed within loaded articles. It is not possible to prevent the generation of static electricity entirely. Elimination of potential ESD hazards requires proper grounding to dissipate static charges before they accumulate to dangerous levels. The NFPA, UL and the U.S. Department of Commerce publish detailed discussions of the hazards of static electricity and ways of reducing it. Where static spark discharge may be hazardous, NFPA Standard No. 77, shall apply, except as otherwise specified.

(3) *Static ground system.* A static ground system consists of one or more electrodes in contact with the earth and a conductor (*i.e.*, metal wire) bonded to the electrode and routed throughout the protected facility. The static ground system may use building structural steel (unless structural steel is used as lightning protection down conductor), metallic water pipes, ground cones, buried copper plates, and rods driven into the earth as electrodes. The ground system shall not use gas, steam, or air lines, dry pipe sprinkler systems, or air terminals and down conductors of lightning protection systems as earth electrodes. A static ground system provides a conductive path to earth from conductive floors, conductive work surfaces, and AE equipment and allows any generated static charges to dissipate.

(4) *Testing equipment grounds.* Trained personnel shall test ground systems after installation, after repairs, and at locally determined intervals and shall keep all records. Remove all exposed explosive or hazardous materials from the room or area before testing. The resistance of the electrode to earth shall not exceed 25 ohms. The electrical resistance from any point on the conductor to the electrode shall not exceed 1 ohm. The ground system design shall provide for interconnecting all ground electrodes of structures equipped with a lightning protection system.

(5) *Grounding of equipment.* Contractor maintenance personnel shall bond all AE equipment (*e.g.*, mixers, grinding mills, screening and sifting devices, assembly and disassembly machines, conveyors, elevators, steel work tables, presses, hoppers) to the ground system wherever ESD presents an ignition hazard. The resistance of the AE equipment to the grounding system shall not exceed 1 ohm. Trained personnel shall test this resistance initially at installation and at least semiannually thereafter, and shall keep all records. Exclude the resistance of conductive belting when testing for resistance of belt-driven machinery to the ground system. Bonding straps shall bridge contact points where oil, paint, or rust could disrupt electrical continuity. Permanent equipment in contact with conductive floors or tabletops does not meet the bonding requirement to the ground system. Maintain compatibility of metallic bonding and grounding cables, straps, or clamps with the explosives involved in the process.

(6) *Belts.* Use conductive belting wherever ESD is an ignition hazard. The resistance of conductive conveyor belts shall not exceed one million ohms as measured between two electrodes placed on the belt and as measured between an electrode placed on the conductive conveyor belt and an electrode attached to the ground system. Do not use static combs to drain off static charges generated from belts or pulleys used in hazardous locations.

(g) *Conductive floors, tabletops, and footwear.* Contractors shall use conductive tabletops and, shall use conductive floors and conductive shoes for grounding personnel at operations involving exposed explosives with electrostatic sensitivity of 0.1 J or less (*e.g.*, primer, initiator, detonator, igniter, tracer, and incendiary mixtures). Bonding wires or straps shall connect the tabletops and floors to the static ground system. Materials sensitive to initiation by ESD sparks include lead styphnate, lead azide, mercury fulminate, tetrazene, diazodinitrophenol, potassium chlorate-lead styphanate mixtures, igniter compositions, grade B magnesium powder, and exposed layers of black powder dust. Dust from solid propellants can be ignited from spark energy, making conductive floors and shoes necessary where such dust is present. Air and dust mixtures of ammonium picrate, tetryl, tetrytol, and solid propellants are also sensitive to initiation by ESD. Testing indicates mixtures of air with vapors from many flammable liquids (*e.g.*, ethyl ether, ethyl alcohol, ethyl acetate, acetone, and gasoline) may ignite by ESD from the human body. Therefore, contractors shall equip areas where personnel might contact these kinds of explosives or with conductive floors and tabletops, except when hazard analysis indicates adequate housekeeping, dust collection, ventilation, or solvent recovery methods eliminate the ignition hazard.

(1) Unless hazard analyses indicate otherwise, conductive tabletops, floors, and shoes shall also protect operations involving the following:

(i) Unpackaged detonators and primers and electro-explosive devices.

(ii) Electrically initiated items, such as rockets, with exposed circuit and

(iii) Hazardous materials capable of initiation by ESD from the human body.

(2) When a hazard remains localized, the contractor may use conductive mats or runners instead of conductive floors throughout an entire building or room. These mats and runners shall meet all the specifications and test requirements that apply to conductive floors. When justified by hazard analysis, contractors may use conductive wrist straps in place of conductive floors and shoes for grounding personnel at small scale and isolated operations. When using wrist straps, operators shall test wrist straps before each use (whenever removed and re-worn) and record test results. The resistance of the wrist strap while the operator is wearing the strap shall fall within a range of 25,000 ohms (minimum) and 1,200,000 ohms (maximum) when measured from opposite hand to ground. Use test equipment capable of testing 1,200,000 ohms + 10%. (**Note:** Operators with dry skin may use special contact creams to decrease the resistance to the required value.)

(3) *Conductive floor and tabletop specifications.* Conductive floors and tabletops, made of, or covered with non-sparking materials such as lead, conductive rubber, or conductive compositions, shall meet the following requirements:

(i) Provide a continuous electrical path to the static ground system and the electrical resistance shall not to exceed the limits specified in paragraph (g)(5)(i) of this section.

(ii) Provide a reasonably smooth surface which is free from cracks. and

(iii) Maintain compatibility of conductive floor and tabletop materials with the energetic materials present.

(4) *Conductive footwear.* Operators shall wear conductive shoes in areas requiring conductive mats, floors, or runners. Personnel visiting such areas shall wear conductive shoes, ankle straps, or similar devices, one on each leg. Prominent markings should identify conductive shoes to help supervisors ensure personnel compliance. Personnel required to work on electrical equipment in areas where conductive floors are installed shall not wear conductive shoes and shall not begin work until operators remove all AE.

(5) *Testing conductive footwear, floors, and tabletops.* (i) *Test criteria.* The maximum resistance of a body, plus the resistance of the conductive shoes, plus the resistance of the floor to the ground system shall not exceed 1 million ohms total. That is, if 500,000 ohms is the maximum resistance allowed from the floor to the ground system, then 500,000 ohms is the maximum combined resistance allowed for the person's body plus the resistance of the conductive shoes (*i.e.*, 500,000 + 500,000 does not exceed 1 million). The contractor can set the maximum resistance limits for the floor to the ground system and for the combined resistance of a person's body plus the shoes, as long as the total resistance does not exceed 1 million ohms.

(ii) To protect against electrocution, the minimum resistance of the floor to the ground system and the minimum resistance of the tabletop to the ground system shall exceed 11,000 ohms in areas with 110 volts service and 22,000 ohms in areas with 220 volts service. A ground fault interrupt (GFI) circuit also meets this requirement.

(iii) *Tabletop test criteria.* The maximum resistance of conductive tabletops to the ground system shall not exceed 1 million ohms.

(iv) *Conductive footwear.* All personnel shall test conductive footwear daily before use to ensure that the combined resistance of the person's body and the conductive shoes do not exceed the limit specified in paragraph (g)(5)(i) of this section. Supervisors shall keep documentation of all test results, including calibration of test equipment. The test voltage of the shoe tester shall not exceed 500 volts. The short circuit current across the shoe tester electrodes (plates) should be limited between 0.5 ma and 2.0 ma. The design of the test instrument shall include built-in safeguards to prevent the test subject from experiencing electric shock. Personnel shall not test shoes in rooms or areas with exposed explosives or flammable gas mixtures. Personnel shall not wear static generating stockings such as silk, wool, and synthetics; and shall not use foot powders, which have a drying action which can increase resistance. Dirt and grit increase resistance of conductive shoes. Personnel should avoid wearing conductive shoes outdoors and shall keep shoes clean.

(v) Trained personnel shall test conductive floors and tabletops upon installation and at least annually thereafter using test equipment specifically designed for this purpose and shall keep records of all test results for at least five years. Testing shall proceed only when the room or area is free from exposed explosives and flammable gas mixtures. The test procedure shall measure the resistance of the floor between an electrode attached to the ground system and an electrode placed at any point on the floor or tabletop and also as measured between two electrodes placed 3 ft (1 m) apart at any points on the floor or tabletop. Each electrode shall weigh 5 lb (2.3 kg) and shall have a dry, flat, circular contact area diameter of 2.5 in (64 mm). The contact area shall have a surface of aluminum or tin foil which is 0.0005 in to 0.001 in (0.013 mm to 0.025 mm) thick and is backed by a layer of rubber 0.25 in (6.4 mm) thick. The surface hardness shall measure between 40 and 60 Shore A when measured by

a Shore Type A Durometer (see American Society for Testing and Materials (ASTM) D–2240–68, Institute of Electrical and Electronics Engineers (IEEE) Standard 14 and NFPA Standard No. 99. Make both electrode-to-electrode and electrode-to-ground system measurements at five or more locations in each room with at least two of the points in heavily trafficked areas. If the resistance measurement changes appreciably with time, record the resistance at the 5-second interval. To prevent biased measurements, locate the electrodes for both the electrode-to-electrode and electrode-to-ground measurements a minimum of 3 ft (1 m) away from an earth ground or other grounded items such as a door frame, ordnance handling equipment, or any grounded item resting on a conductive floor. (**Note:** The size of the floor or tabletop may make it impractical to conduct five surface resistance (electrode-to-electrode) or resistance-to-ground measurements and still remain 3 ft (1 m) away from all grounded items. In such cases, take enough measurements to ensure adequate testing of all parts of the conductive surface and document the justification for a reduced number of electrode-to-electrode or electrode-to-ground measurements in the grounding system test plan.) Only trained personnel shall operate and maintain test instruments.

(h) *Handling low-energy initiators.* Supplement typical precautions, such as shielding and safety glasses, with the following measures, as appropriate, when manufacturing, processing, using, or testing low-energy initiators initiated by 0.1 J of energy or less.

(1) Electrically bond and ground all metal parts of equipment.

(2) Ensure personnel wear clothing which prevents generation of static electricity. Test conductive shoes with a resistance meter before entering an area where low-energy initiators are being processed.

(3) When low-energy initiators are being handled, ground personnel directly by wrist straps. The acceptable resistance reading, taken once daily when the operator is wearing the strap, shall be between 250,000 and one million ohms when measured from opposite hand to ground. Special contact creams may be used to decrease the resistance to the required value.

(4) Periodically coat glass, acrylic, or polycarbonate materials required for transparent shielding with an anti-static material to prevent buildup of static electricity, when static sensitivity is indicated to be a hazard.

(5) The sounding of a static electricity alarm, installed with the setting best able to provide ample warning, signals a work stoppage until the problem has been located and corrective action taken.

(6) Check relative humidity and temperature before starting operations and throughout the workday where such conditions are used to mitigate or prevent safety problems (*i.e.*, hydroscopicity or static control).

(7) Do not paint metal surfaces subjected to rubbing or friction. If a lubricant is necessary, use a composition which allows the metal's surface resistance to remain at or below 25 ohms.

(8) Work on or with low-energy initiators only in areas equipped with conductive floors and table tops. Exceptions may be made when the initiators are in their original packaging, or are part of a finished metallic end item affording them complete protection from electromagnetic or electrostatic energy.

(9) Do not work in the vicinity of actual or potential electromagnetic or electrostatic fields (*e.g.*, radio transmission, electrical storms, transformer stations, high voltage transmission lines, improperly grounded electric circuitry, rotating equipment, belts, etc.). Establish adequate lightning protection and grounding and adequate resistances for fixed sources of energy for locations with low-energy initiator operations. Shield these areas to afford protection against local mobile radio transmission.

(10) Locate electrical equipment out of the range of an operator working with a low-energy initiator. With soldering irons, it may be advisable to ground and limit energy to levels below initiating thresholds.

(11) When not part of an end item or end item subassembly, transport initiators only when packed according to the latest packing specifications for low-energy initiators.

(i) *Electrical test equipment.* Use the lowest possible power source for all electrical and electronics test equipment. When possible, use batteries in lieu of 110 Vac power sources. During testing, do not use power sources capable of initiating the AE. When test specifications require using electrical energy at or above the initiating threshold level of explosive devices, use test chambers or provide shielding capable of containing all hazards and apply energy remotely. Provide safeguards against the possibility of human error.

(j) *Humidification and ionization.* (1) Humidification which maintains relative humidity above 60 percent effectively prevents static electricity accumulations and subsequent discharges. This technique involves pre-operational checks and regular monitoring of the humidity levels throughout the day. Do not use humidification with metallic powders unless hazard analysis indicates the powders are not susceptible to spontaneous ignition in air with 60 percent relative humidity.

(2) Ionization is electrical neutralization and serves as an effective method of removing static charges from certain processes and operations. Methods of application can be found in NFPA Standard 77.

(3) Contractors may use ionization or humidification to augment their ESD control program but, may not use them in lieu of conductive floors and footwear (where required).

**§ 184.7 Manufacturing and processing propellants.**

(a) *General.* (1) These requirements apply to propellant manufacturing and augment other requirements contained in this part.

(2) The safety precautions for fabrication of propellants, propellant loaded items, gun ammunition, and rocket motors follow the generally accepted principles used for many types of explosives and energetic materials. Solid propellants can be divided into general categories such as single, double, and triple base, castable composite, and modified double base composite. (*e.g.*, castable composite propellant modified with explosive plasticizer such as nitroglycerin). Liquid propellants include a wide range of liquid fuels, liquid oxidizers and fuel-oxidizer monopropellants.

(3) Although processing safety considerations for finished propellant AE and loaded rocket motors are similar, each propellant type has its own characteristics for processing of raw materials, intermediate compositions, and final processing. Hazards data for intermediate and finished propellant can help to define the requirements that ensure safety in processing. Hazards data includes initiation thresholds to such stimuli as impact, friction, heat, and electrostatic discharge for specific processes and handling situations. In evaluating and properly applying the guidelines of this chapter, consider the response of the materials in terms of energy input sensitivity and magnitude of energy release. Follow the general requirements for manufacturing and processing of pyrotechnics given in Chapter 8 for safety precautions for ignition system fabrication. (**Note:** An exception to this requirement is processing of a

propellant grain igniter the same as motor propellant until the grain is mated with the initiator assembly.)

(4) In addition to generally accepted safety precautions for handling of explosives and other energetic materials, the following paragraphs provide general guidance pertinent to the manufacturing of propellants, propellant loaded items, gun ammunition and rocket motors.

(b) *Properties of propellants.* Knowledge of the properties and types of propellants is critical to the establishment of proper hazard controls. Propellants present a wide range of hazard characteristics even within the various types due to variations in grain size of ingredients and energy content of additives, both solid and liquid. As described below, test data is essential for determining the chemical, physical, physiological and explosive properties and hazards of raw materials, intermediate compositions, processing aids, and liquid or solid propellant, both uncured and cured.

(1) *Single base propellants.* Single base propellants have the principal explosive ingredient of nitrocellulose. Remaining ingredients include stabilizers as well as other additives. The mixture is shaped into tubes, perforated tubes, flakes, etc. by extrusion and cutting.

(2) *Double base propellants.* Double base propellants contain nitrocellulose and nitroglycerine (or other liquid nitrate ester) as the two main ingredients. Remaining ingredients include stabilizers as well as other additives. This propellant can be extruded/cut or cast into its final shape.

(3) *Triple base propellants.* Triple base propellants contain three main components: nitrocellulose, nitroglycerine (or other liquid nitric acid ester), and nitroguanidine. This propellant can be extruded, cut or cast into its final shape.

(4) *Composite propellants.* Composite propellants consist of finely divided oxidizers dispersed in fuel matrix with the binder normally being made of plastic material. Nitrates and perchlorates are commonly used as oxidizers. Common binders include: hydroxyl terminated polybutadiene, carboxyl terminated polybutadiene, polybutadiene-acrylonitrile, polyurethane, polybutadieneacrylic acid, and polysulfides. This propellant is typically cast into its final shape.

(5) *Composite modified double base propellants.* Composite modified double base propellants contain a dispersed phase of finely ground oxidizer and usually powdered fuel additive. This propellant is typically cast into its final shape.

(6) *Liquid propellants.* Liquid propellants include a wide range of liquid fuels, liquid oxidizers and fuel-oxidizer monopropellants. (**Note:** Refer to the DOD 6055.9–STD, 9.6 for more information and requirements associated with specific liquid propellants.

(c) *In-process hazards.* (1) During scale up from research and development of new propellants to an existing manufacturing process, determine the chemical, physical, physiological, explosive properties, and hazards of raw materials, intermediate compositions, processing aids, and liquid or solid propellant, both uncured and cured.

(2) Unless available from other sources, conduct testing to determine thermal stability, chemical compatibility of ingredients, exothermic reactions, and sensitivity to ignition or detonation from friction, impact, and electrostatic discharge. Additionally, deflagration-to-detonation and card gap test data can be valuable. Applicable tests are described in TB 700–2, Explosives Hazard Classification Procedures.

(3) Minimum testing may satisfy the classification requirements for several in-process operations. For example:

(i) If reliable data exist that indicate that the propellant mixing operations are H/D 1.1, no testing would be needed to adopt this classification.

(ii) If testing shows that uncured propellant will detonate, the casting and curing operations are HD 1.1 hazards.

(iii) If detonation tests show that the cured propellant will detonate, all operations with cured or curing propellant are HD 1.1 hazards.

(4) Make safety information for all materials used in the formulation available as required. Train personnel on the hazards involved in propellant process situations.

(d) *Q–D requirements.* Operate new manufacturing and support facilities for processing of propellants and propellant loaded items to conform to the latest QD requirements for the HD of the propellant in its in-process condition.

(e) *Separation of operations and buildings.* (1) Perform propellant and rocket motor manufacturing and processing in special areas (*i.e.*, operating lines) whose boundaries are separated from all other areas outside the line in accordance with applicable QD criteria. Table 1 to § 184.7 provides remote control and personnel protection requirements for certain propellant processing operations.

(2) Generally treat sequential operations on rocket motors as one process operation in one building.

(3) When the hazard classification of a propellant has not been established, classify the propellant during site and construction planning as the most hazardous class/division that might possibly apply during manufacturing and processing.

(4) Locate safety shelters, lunchrooms, convenience buildings, and private vehicle parking for personnel working in an operating building in accordance with applicable QD criteria.

TABLE 1 TO § 184.7.—CONTROL AND PERSONNEL PROTECTION REQUIREMENTS FOR CERTAIN PROPELLANT PROCESSING OPERATIONS

| Operation | Remote control | Personnel protected [1] |
|---|---|---|
| Blending and screening of ammonium perchlorate | Mandatory | Mandatory. |
| Blending, screening of nitramines and Mandatory perchlorates other than ammonium | Mandatory [2] | Mandatory.[2] |
| Grinding, and mechanized drying of perchlorates and nitramines | Mandatory | Mandatory. |
| Grinding, blending, screening, and mechanized drying of ammonium nitrates | Advisory | Advisory. |
| Rotating blade propellant mixing | Mandatory | Mandatory.[4] |
| Power-driven cutting, machining, sawing, planing, drilling, or other unconfined operations in which rocket motors or propellant of Hazard Division 1.1 and 1.3 are involved.[2] | Mandatory [3] | Mandatory.[3] |
| Mandrel break away removal from cured propellant | Mandatory [3] | Mandatory.[3] |
| Pressing, extruding, pelletizing or blending | Mandatory | Mandatory. |
| Casting Propellants | Mandatory [3] | Mandatory.[3] |

[1] Operating personnel shall be at K24 or in a control room that will limit overpressure to less than 2.3 psi.

[2] Attended screening of wet material may take place if shown acceptable by hazard analysis.
[3] Attended operation permitted if shown to be acceptable by hazard analysis.
[4] The attended operation may take place when a hazard analysis shows the MCE to only be fire hazard.

(f) *Equipment and facilities.* (1) Except as provided for in other applicable documentation, follow the mandatory requirements of this part for the design, layout, and operation of facilities and equipment for propellant operations. Where there is no guidance, govern operations by the results of hazard tests and analyses (see § 184.12) performed and documented to address specific operations. As some propellants can be sensitive to initiation by static electricity, consider bonding and grounding of equipment, tooling, and rocket motor conductive components along with other means of static elimination and control. Use conductive work surfaces and floors or floor mats for assembly of igniters and igniter subassemblies.

(2) Use non-sparking and non-rusting materials, which are chemically compatible with the propellant material, for equipment, tooling, and machinery that will come in contact with propellant or propellant ingredients.

(3) Certain propellant operations involve significant energy input that enhances the possibility of ignition. Examples are rolling mills, machining and drilling operations. In these situations, conduct complete hazard analysis and evaluation prior to starting the operation.

(4) Special requirements of this part apply to heat-conditioning equipment.

(5) Exposed radiant surfaces in the form of S-shaped smooth pipe or fin-type radiators are easy to clean. Other types of radiators are acceptable, but are less desirable because of cleaning difficulties.

(6) When mechanical ventilating equipment is used in operations involving potential concentrations of solvent vapors, dusts, and nitroester vapors, do not locate the electric motor and motor controls directly in the potentially contaminated air stream. Provide the ventilation system with a suitable means of collecting condensate.

(7) Design air conditioning and cure oven air-circulating equipment of the closed system type to prevent contaminated air from contacting the air motor and controls. Monitor recirculated air to ensure concentration of vapors and dusts do not reach flammable (or explosive), or personnel threshold limits. Use dustproof and vaporproof electric motors and controls. Preferably use air mover blades that are nonmetallic.

(8) Rigidly fix and stabilize the equipment during mixing to preclude contact between fixed and movable parts. Design mix bowl lift mechanisms (*i.e.*, elevators) to assure adequate blade-to-blade and blade-to-bowl clearances during the complete operation cycle.

(9) Provide positive controls to physically block or stop bowl or mixer head movement in case of drive mechanism malfunction. Assure maintenance of blade-to-blade and blade-to-bowl clearance at all times.

(10) Use rigid and strong mix blades and shaft to ensure minimum flex from viscosity of the mix and speed of the shaft.

(11) Use electrical components of all mixers that meet the appropriate electrical classification or remotely locate them or shroud and purge them with inert gas. Design purged systems to provide automatic warning upon loss of gas pressure.

(12) Equip mixer blade shafts with seals or packing glands that prevent migration of liquids or solvent vapors into bearings. Avoid submerged bearings and packing glands. However, if used periodically test them for contamination and clean them.

(13) Establish a program to detect significant changes in blade/shaft position relative to mixer head. Check clearances between mix blades and mixer bowls at regular intervals based on operating time and experience to make sure the clearance is adequate. Maintain a record of such checks, mixer blade adjustments, and any damage to the mixer blades and bowls.

(14) Electrically bond and ground mix bowl, blades, and drive unit.

(15) Inspect blades and other moving parts of new mixers and replacement parts for old mixers. Inspect (*i.e.*, magnaflux or X-ray) for cracks, crevices, and other flaws.

(16) Interlock electric service to propellant mixers with fire protection system controls so that the mixer cannot start when the fire protection system is inoperative.

(17) Regularly check and maintain all process equipment that applies energy to in-process propellant for wear and misalignment. Keep a record of these checks and any maintenance performed for the process equipment.

(18) Control equipment performing sequential operations on propellants (*e.g.*, extrusion and cutting) to prevent interference.

(g) *In-process quantities and storage.* (1) Allow only the quantity of propellant and loaded subassemblies needed to ensure a safe and efficient workflow, when conducting operations in an operating building. Short-term storage of larger quantities in an operating building is permissible when it is not in use for other operations.

(2) Completed assemblies with or without installed ignition system may be stored in operating buildings provided there are no other operations in progress and quantity/distance complies with requirements.

(3) Production igniters may be stored in designated areas within an assembly or disassembly facility.

(4) Indoor storage is preferable for all types of explosives and is mandatory for bulk HE, solid propellants, and pyrotechnics. Give priority of existing indoor storage to AE requiring the most protection from the weather (based on the method of packing). Protect propellant and propellant materials from overheating by exposure to direct sunlight when in transit or on temporary hold.

(5) Consider the propulsive characteristics and the ignition probability of AE (*e.g.*, propellant loaded devices, rocket motors, assist take-off units and missiles) during all logistical phases in order to obtain as much safety as possible under the circumstances. Because of the great number of types and sizes of propellant loaded devices and conditions of assembly encountered, only general safety guidance is provided in this part. Thus, the contractor should make every effort to prevent ignition of any units being manufactured, assembled, disassembled, handled, stored, transported or deployed. Use approved flight restraining devices (tie-downs) to the maximum extent possible. When doubt exists as to whether a given AE or configuration (state of assembly) is propulsive or nonpropulsive, treat the AE as propulsive until pertinent technical information can be obtained.

(h) *Ingredients processing.* (1) *Weighing, measuring, and handling raw materials.* (i) Electrically ground scales for weighing raw materials, where needed, to properly protect the operation. This grounding is especially important where flammable or combustible materials are involved.

(ii) Provide separate weight or measurement rooms, cubicles, or areas (dependent upon the quantity and sensitivity of the materials handled) provided. Separate oxidizer and metallic powder weighing from each

other and from other materials by physical barriers rather than distance.

(iii) It is important that containers, equipment, hand tools, scale pans, etc., used for weighing processes do not mix with those weighing or measuring oxidizers and fuels, particularly where distance rather than physical barriers separates these areas. Use positive measures to ensure the complete separation of such equipment and tools.

(iv) Do not change the designated use of space and equipment without a thorough cleaning and inspection to make sure that all traces of the previous material have been removed, if any possibility exists that materials are incompatible.

(2) *Oxidizer Processing.* Solid propellant oxidizing agents are perchlorates, nitrates, nitroesters, and nitramines used in solid rocket motor propellants.

(i) Avoid contaminating an oxidizer agent with any metal or chemical (fuel) which may result in a more sensitive composition.

(ii) Use closed systems as much as possible for dust, humidity, and tramp material control.

(iii) Use fire-retardant materials to make flexible connections (socks) in pipes or duct systems that convey oxidizer materials and dust socks in collectors or hoppers. Only use connection materials that are chemically compatible with the oxidizers.

(iv) Make the pipes and duct systems electrically continuous. Avoid threaded joints and fittings in contact with oxidizer. Preferably use quick clamp neuter end pipe joints.

(v) Use static electricity control measures to dissipate static charges to an acceptable level if transporting oxidizer by fluidization.

(3) *Oxidizer drying.* (i) Establish the safe temperature for drying each material and do not exceed that temperature at any point in the drying apparatus or drying room.

(ii) Use thermostatic controls to prevent exceeding the maximum safe temperature in the drying process. Install and use redundant temperature controls.

(iii) Do not use electrical heating elements that may contact the oxidizer or oxidizer dust.

(iv) Hold dust to a minimum in the drying process. Use a dust collection system if dusting can create a potential hazard.

(v) Exercise care to prevent drying of incompatible materials simultaneously in the same drying process. Do not dry oxidizers in an oven, drying room, etc., used for processing flammable or other incompatible materials until after cleaning and inspection shows it is free of any residual contamination.

(4) *Screening oxidizers.* (i) Construct screening equipment so it cannot subject oxidizer material to pinching, friction, or impact as a result of metal-to-metal contact. Keep rooms in which screening units are operated thoroughly clean to eliminate hazardous accumulations of dust.

(ii) Electrically ground oxidizer screens and bond them to the receiving vessel.

(5) *Blending oxidizers.* (i) If blending of oxidizers generates gases, design and install a suitable means of gas pressure relief into the blender.

(ii) Electrically bond the blender throughout.

(iii) Construct blending equipment so it cannot subject oxidizer material to pinching, friction, or impact between metal-to-metal surfaces.

(iv) When blending ammonium perchlorate using powered mechanical equipment, protect operating personnel. Use remote controls for mechanical blending.

(v) When using powered mechanical methods for blending HD 1.1 substances (such as RDX or HMX), use remote controls and personnel protection (See Note 1 to Table 1 to § 184.7).

(6) *Grinding oxidizers.* (i) When using impact type mills, provide sufficient clearance between stationary and moving parts to prevent metal-to-metal contact. Check clearances as often as needed to ensure they are adequate. Air purge mill bearings to prevent contamination. Do not use impact type grinders for HD 1.1 substances.

(ii) Pass oxidizer feed materials through a screen mesh with openings no greater than the clearance between hammer and plate. Use the smallest screen mesh size for ammonium nitrate that allows free flow of the prills. Use magnetic separators if screening is not possible.

(iii) Use only compatible lubricants in grinding equipment.

(iv) Install and use heat sensing devices for the bearing housing of grinding and conditioning equipment.

(v) Determine the optimum cleaning cycle and method for grinding equipment and include them in SOP.

(vi) Provide grinding operations with wet dust collection systems, where appropriate.

(vii) Thoroughly ground and bond pneumatic grinding operations to provide for electrostatic charge dissipation.

(7) *Preparation of fuel compositions.* (i) Determine the sensitivity characteristics of fuel compositions prior to production mixing operations.

(ii) Establish compatibility of materials. Develop procedures that preclude the formation of highly sensitive compositions or hazardous conditions during processing, such as, dry AP and powdered metal mixtures.

(iii) Preferably bond equipment, piping, and vessels used in fuel preparation to form a continuous electrical path with each other and to building ground. When pouring metallic powder or flammable liquids from one container to another, bond the containers together prior to the transfer.

(iv) Minimize the formation and accumulation of dust in all preparation operations.

(v) Use fume hoods, dust socks, closed systems, and dust/fume vacuum exhaust hoses, as appropriate, to prevent vapors and dust getting into the operating areas.

(8) *Transfer operations.* (i) Transfer finely divided powdered ingredients by methods that control flow rate and minimize electrostatic charge generation.

(ii) Before transferring flammable solvents, electrically bond the transfer and receiving vessels to eliminate electrostatic potential differences.

(i) *Mixing.* (1) Secure hardware and associated equipment to prevent loose items falling into mixers.

(2) Pass liquids and powders to be added to the mix vessels through a screen or orifice with an opening(s) less than the smallest clearance in the mixer. You may directly add smaller amounts of material, provided a positive means exists to ensure the material does not contain any foreign material.

(3) Use other means such as x-rays to examine materials that you cannot screen or that are opaque or not easily inspected.

(4) When consistent with the process system and requirements, cover the mixer bowl after completing charging or mixing to prevent the accidental introduction of foreign objects into the mixer and to prevent sunlight impinging directly on the materials in the bowl.

(5) Use only non-sparking devices for hand scrapping the sides and blades of mixers. Set up controls to prevent accidental introduction of these and other devices into the mixer.

(6) Account for all loose tools and equipment before starting or continuing mixing operations.

(7) Do not allow loose objects such as jewelry, pens and coins in the mixer operating area where accidental introduction into the mixers might occur. Pocketless coveralls should be used.

(8) Provide direct and unobstructed routes for personnel egress from mixer buildings or bays.

(9) Do not attempt to fight propellant fires.

(10) Preferably equip propellant mixers, inside and outside of the mixing vessel, with a high-speed deluge system.

(j) *Casting and curing.* (1) Personnel may attend cast operations if you first conduct a thorough safety review of the operation is conducted.

(2) Multiple or single production line type casting is permitted. However, when the survivability of the production facility is critical or the risk to the program is significant, the PCO may require the contractor to provide protection that prevents propagation of an incident from the casting operation to adjacent bells or pits.

(3) Use only smooth cast piping surfaces in contact with propellant. Use tooling free of cracks, pits crevices, and weld slag for propellant casting and curing operations. Avoid threaded joints as much as possible, especially at unions requiring disassembly for process operation or cleaning.

(4) Do not design or use cast tooling and mandrels that permit metal-to-metal friction or impact sites.

(5) Design and use propellant flow valves that prevent propellant pinching or compression between two metal surfaces.

(6) Design and use pressurized casting vessels capable of withstanding at least twice the maximum allowable working pressure.

(7) Secure lids to pressurized casting vessels so that they will withstand the rated pressures of the vessels.

(8) Do not exceed the working line pressure of casting vessels. Install a relief valve downstream of the regulator on pressure lines.

(9) Equip each vessel with a blowout disk (burst diaphragm) designed to blow out at less than 120% of the vessel's maximum allowable working pressure. Allow for the release of the potential rapid rise of pressure in the vessel should the propellant ignite.

(10) When curing or casting propellant under pressure, provide emergency pressure relief.

(11) Pressurize and depressurize propellant cure operations remotely.

(12) Physically and electrically disconnect casting vessels from lifting devices during cast operations.

(k) *Extrusion processes.* (1) Design solventless extrusion presses and compression molding equipment to remove air from the propellant before compaction and extrusion begin. Assure that procedures provide for checking operation of the vacuum system and for cleaning it of propellant residue and condensed vapors such as those generated from nitroglycerin volatilization.

(2) Check ramheads for alignment with the press bore to preclude metal-to-metal contact. Include flashing removal in the process procedures.

(3) Provide interlocks to preclude press operation during loading or other attended operations.

(l) *Propellant loaded AE.* (1) When performing operations on cured propellant contained in pressure vessels or rocket motor cases and there may be a risk of ignition due to energy inputs (*e.g.*, electrical check of pyrotechnic devices). In such cases, secure the unit in a fixture capable of withstanding 2.5 times the rated thrust of the assembly.

(2) Use remote control to apply mechanical force to ''breakaway'' the mandrel or other tooling embedded in propellant. However, see Table 1 to § 184.7 for exceptions.

(3) Avoid moving loaded rocket motors with cores in place. If loaded motors containing cores must be moved, however, support the core and motor case by or suspended from a common source or in some manner locked or tied together to prevent independent movement of either.

(4) When determining the safest method to use, evaluate and consider the hazard characteristics of individual propellants you will cut, machine, or contour.

(5) Design propellant machining equipment:

(i) To prevent contact of cutting tools or blades with motor cases and other metal objects.

(ii) To minimize generation of heat.

(iii) To facilitate removal of dust and chips, and to afford personnel protection. If there is a possibility that a metal or other foreign object may be in the propellant, x-ray the motor or grain prior to machining.

(6) Frequently remove propellant dust, chips and shavings from the work area during machining and contouring.

(7) Preferably position rocket motors in final assembly process to permit ready access to all sides of the motor. Keep aisles and exit doors clear and unobstructed. Install quick release hardware on all exit doors.

(8) Keep the number of items in the final assembly building at the minimum consistent with a safe and efficient operation.

(9) Grounding of propellant loaded assemblies in storage is optional, based on a case-by-case review.

(10) If the process requires removing an igniter-shorting clip, keep the igniter shorted until immediately before insertion. Minimize the time that the igniter remains unshorted.

(11) Provide means for controlled dissipation of static electrical charges during igniter insertion.

(12) Conduct operations that involve electrical continuity checking/testing of ignition systems installed in rocket motors according to thoroughly reviewed and approved procedures. Conduct these checks by remote control with the motor mounted in a test stand designed to withstand 2.5 times the thrust of the motor.

(m) *Disassembly.* (1) As much as possible, avoid metal-to-metal movement and trapping of explosive substance in process equipment or tooling that require disassembly in a process operation.

(2) Use clean, external clamp fittings on pipe assemblies for propellant transfer.

(3) Before starting non-routine disassembly of equipment or tooling (such as that necessary for equipment repair or for securing the process), evaluate potential hazards of trapped material or process residuals.

TABLE 1–1 TO § 184.7.—CONTROL AND PERSONNEL PROTECTION REQUIREMENTS FOR CERTAIN PROPELLANT PROCESSING OPERATIONS

| Operation | Remote controls | Personnel protected [1] |
|---|---|---|
| Blending and screening of ammonium perchlorate | Mandatory | Mandatory. |
| Blending, screening of nitramines and perchlorates other than ammonium | Mandatory [2] | Mandatory.[2] |
| Grinding, and mechanized drying of perchlorates and nitramines | Mandatory | Mandatory. |
| Grinding, blending, screening, and mechanized drying of ammonium nitrates | Advisory | Advisory. |
| Rotating blade propellant mixing | Mandatory | Mandatory.[4] |

TABLE 1–1 TO § 184.7.—CONTROL AND PERSONNEL PROTECTION REQUIREMENTS FOR CERTAIN PROPELLANT PROCESSING OPERATIONS—Continued

| Operation | Remote controls | Personnel protected [1] |
|---|---|---|
| Power-driven cutting, machining, sawing, planing, drilling, or other unconfined operations in which rocket motors or propellant of Hazard Division 1.1 and 1.3 are involved [2]. | Mandatory [3] | Mandatory.[3] |
| Mandrel break away removal from cured propellant | Mandatory [3] | Mandatory.[3] |
| Pressing, extruding, pelletizing or blending | Mandatory | Mandatory. |
| Casting propellants. | Mandatory [3] | Mandatory.[3] |

[1] Operating personnel shall be at K24 or in a control room that will limit overpressure to less than 2.3 psi.
[2] Attended screening of wet material may take place if shown acceptable by hazard analysis.
[3] Attended operation permitted if shown to be acceptable by hazard analysis.
[4] The attended operation may take place when a hazard analysis shows the maximum credible event (MCE) to only be fire hazard. For guidance on ENERGETIC (PROPELLANT) LIQUIDS, please refer to DoD 6055.9, Section 9.5.

**§ 184.8 Safety requirements for manufacturing and processing pyrotechnics.**

(a) *General.* (1) Pyrotechnics, as well as propellants and explosives, are chemical mixtures which release large amounts of energy. The amount of energy released, the speed of reaction, and the form of the output energy are the characteristics that distinguish between pyrotechnics and other forms of high-energy (HE) mixtures, and between types of pyrotechnics. The safety precautions for manufacturing and processing pyrotechnics parallel those of many types of explosives and propellants. However, incident mitigation techniques must recognize the unique characteristics of the particular mixtures, and not rely on techniques appropriate to other types of explosive substances (*e.g.*, HE). Rates of reaction of pyrotechnic mixtures vary greatly, from mixtures with very low rates of reaction to rates equivalent to high explosives. Energy output also varies from very low to very great. Process variables, such as ingredient particle size, can affect reaction rate and output to the extent that a change in process variables can negate protective measures. Complicating safety in pyrotechnics operations is the variety of highly flammable solvents often used as processing aides.

(2) Pyrotechnics are mixtures of fuels and oxidizers, typically held together by binders. Pyrotechnics display many different characteristics, because they are formulated for different purposes. General categories of pyrotechnics are: initiators (igniters); illuminants; smokes. gas generators; sound generators; heat producers; and timing compositions. Each has its own characteristics and attendant processing requirements.

(b) *Properties of pyrotechnic materials and mixtures.* Knowledge of the various pyrotechnic properties is critical to the establishment of proper hazard controls.

(1) *Oxidizers.* Oxidizers are oxygen rich substances which decompose to liberate oxygen gas, or substances which act as oxidizers with active metal fuels. Typical inorganic oxidizers are nitrates, chlorates, perchlorates, oxides, chromates, and dichromates. Fluorine and chlorine, as in hexachloroethane and Teflon (brand of fluorine containing compound) are examples of organic compounds used as oxidizers. All oxidizers, if not well controlled, tend to increase the risk of undesired reactions, particularly in the presence of organic materials (including wood). Potassium chlorate compositions are particularly susceptible to accidental ignition. Impurities in process materials, or introduced by poor process control (*e.g.*, oils, lubricants) can readily increase the sensitivity of mixtures or result in ignition. Some oxidizers with trace impurities, or by themselves (*i.e.*, ammonium perchlorate (AP)), can detonate when subjected to severe stimuli such as an adjacent explosion or thermal energy. Safety requires absolute control of oxidizers to prevent contamination, uncontrolled moisture absorption (many are hydroscopic), fires or explosions from accidental mixing with fuels.

(2) *Fuels.* Fuels react with the oxidizers to produce heat and an oxidized product. It is the proper pairing of the fuel with an appropriate oxidizer that determines the reaction characteristics, and the use for the mixtures. Metals, such as magnesium or aluminum, create high heat or light output. Fuels include an almost unlimited variety of organic (sugars and red gum) and a more limited variety of inorganic materials (*e.g.*, sulfur boron, phosphorus, and sulfides). Although generally more stable than oxidizers, fuels also have unique characteristics that contribute to risk. These include the liberation of hydrogen from magnesium and aluminum powders which become wetted. Again, storage and handling of fuels requires tight process controls which respect the characteristics of the specific materials and prevent contamination which may result in a reaction.

(3) *Binders.* Homogeneity of the mixtures governs the effectiveness of pyrotechnic compositions. Some pyrotechnics (*e.g.*, black powder) are self-bound by the manufacturing process to maintain the charcoal, sulfur, and potassium nitrate in the correct, proportionate, intimate mixture needed. Other mixtures, because of differences in particle size or weight of ingredients, require the use of a binder to retain the homogeneous blend. Other binders include lacquers, epoxies, and a variety of polymers activated by heat or solvents. Some solvents are similar in composition to fuels, and the binder may also be a fuel or burn rate modifier. Some binders are flammable, others require the use of a highly flammable solvent, and thus the ignition characteristics of these materials are important risk factors.

(4) *Types of pyrotechnic compositions.* Pyrotechnic compositions are usually grouped by the function of the end item. There is no universal single grouping, but typical major groupings are: heat and delay compositions (*e.g.*, ignition, delay, heat, and propellant), color and light compositions, smoke (*e.g.*, obscuring and signal smokes, noise). The range of sensitivity to initiation and the rate/amount of output energy varies greatly both within and between groups.

(i) *Heat and delay compositions.* Pyrotechnic fuzes, electric matches, first fires, primers, igniters, delay compositions are all members of this group. The end products must function with very little stimulus, and thus the mixtures, as well as individual ingredients, are sensitive to initiation. First fire, igniter and primer mixtures are generally the most sensitive to initiation stimuli (*i.e.*, heat, friction, impact, static electricity). (Note: Primer mixes containing initiating explosives such as lead azide or lead styphnate are properly classed as explosives.) These

mixtures often use black powder or potassium chlorate/metal combinations or potassium chlorate/phosphorous mixtures. This group also contains mixtures with high heat outputs for such purposes as document destroyers and welding. These high heat producers are generally metallic fuels and metallic oxidizers, as in the iron oxide/aluminum powder formulations for Thermite. Black powder, when used to launch or expel items is a propellant and is included in this group.

(ii) *Color or light producing compositions*. There are a wide variety of mixes and compositions which produce light, color, or both. Illuminant candles, photoflash, decoy flares all are part of this very broad category. Many of the compositions, notably the photoflash and decoy flare compositions, are characterized by very rapid reactions, and extreme temperature outputs. Both have resulted in fatal accidents. Metallic fuels are characteristic of the high light (visible, IR) output mixtures. Output temperatures exceeding 2000 °F (1093 °C) characterize many of the items in this category. Accidental initiation of large mix batches of some compositions may have a significant pressurization effect in addition to the heat, with resultant structural damage.

(iii) *Smoke and noise producing compositions*. Obscurants, colored markers, weapons simulators and weapons effects simulators comprise this category. Smoke compositions are characteristically slow burning in finished form, but must burn at a temperature high enough to vaporize the dye compound (usually organic). Chlorates are often the oxidizer in colored smoke mixes. ''Flash-bang compositions'' used in weapons simulators and weapons effects simulators are actually explosives in most instances, and will detonate with adequate stimulus in unconfined bulk form. ''Flash-bang'' compositions, particularly in display or commercial fireworks, but also in military items, were the cause of many injury-producing accidents. Similarly, ''whistle'' compositions are very sensitive to ignition and can detonate.

(c) *Process requirements.* Pyrotechnic operations, because of the sensitive nature of the ingredients and compositions, the dangerous effects of contamination, including cross contamination of oxidizers and fuels, and the amount of open or exposed ingredients and mixtures, require stringent housekeeping and cleanliness. Materials control and cleanliness are mandatory not only to reduce the likelihood of accidental initiations, but also to minimize the effects of a mishap.

(1) Do not allow ingredient or composition dusts to accumulate, whether on the exterior work surfaces or the interior of process equipment and ventilation systems. (Note: Accident investigations frequently identify dust buildups as the source of initiation when items are dropped on, or scraped across them.) Dust accumulations also provide a propagation path, which can follow from initiation to a significant source of material, causing an accident.

(2) Similarly, where flammable solvents are part of the process, positive vapor control is mandatory to prevent initiation of a solvent vapor cloud, which may be injurious in itself, or may be the propagation path which ignites a mixture. Just as dusts in ventilation systems may provide a propagation path for an event, solvent vapors in ventilation systems, hallways, conduits, or pipes may also provide a propagation path.

(3) As many pyrotechnic ingredients, mixtures or the solvents used in their production are highly susceptible to initiation by static electricity, static control systems (*i.e.*, conductive floors/mats, shoes, wrist straps, grounding of equipment, etc.) are mandatory where hazard analysis indicates a need for static control.

(4) For all pyrotechnic operations, a documented hazard analysis and risk assessment is mandatory to validate the layout of operations, selection of materials and equipment, and process control parameters. See § 184.11.

(5) *Weighing raw materials.* Positive means of separation of fuels and oxidizers is mandatory. The scale of the operation will dictate whether separate rooms, cubicles, areas, or other means for separation are required. It is important that equipment (*e.g.*, containers, hand tools, scale pans, etc.) used for weighing fuels or oxidizers are not interchanged or shared among incompatible operations, unless thoroughly cleaned between fuel and oxidizer use, particularly where distance rather than physical barriers separates these areas. A hazard analysis shall determine appropriate personnel protective equipment for personnel weighing or handling exposed oxidizers or fuels.

(6) *Drying materials.* Drying materials may result in the generation of flammable vapors or dust which have the potential to create an explosive atmosphere. The dust settling out of the atmosphere may increase in sensitivity. Operational hazard analysis must address these possibilities and the possibility of initiation by over-temperature or extended heating. Use the minimum temperature necessary for drying component and pyrotechnic materials. Dust and residue control is very important in drying operations, as elevated temperatures frequently results in increased sensitivity of materials. The requirements for drying apparatus are described in § 184.8.

(7) *Mixing and blending.* Mixing, blending, and cleanup of pyrotechnic compositions from equipment apparatus require attention because of the high potential for mishaps during these operations. As compositions vary, no single type of mixer or blender can be the exclusively approved equipment for pyrotechnic mixing and blending operations.

(i) Select the mixing equipment and methods appropriate for each composition. Hazard analysis or test shall determine the type of mixer or blender and batch size. Devices using a tumbling action eliminate many of the problems associated with rotating blade mixers, plows and scrapers. Rotating blade type mixers create points where frictional heat may develop or where accidentally introduced foreign material can create hot spots through friction or crushing of the composition. Equip enclosed mixers and blenders with pressure relief, to preclude a transition from burning to detonation. Minimize personnel exposure when charging and emptying mixers and blenders. Unless hazard analysis indicates otherwise, charge, operate and empty mixers and blenders remotely. Use appropriate interlocks, clutch brakes, and similar devices to preclude personnel exposure during mixer or blender operation, and to preclude the movement of mixer or blender parts during periods when operators are present.

(ii) Mixing and blending operations often present a high risk of explosion. Facility construction and procedural controls, guided by hazard analysis or test, must reflect this risk. Prevention of propagation, protection of production capability and personnel require separation and isolation of these operations. At least one wall or equivalent panel area in each bay shall be frangible to provide pressure relief in case of an incident. Preclude personnel exposure to pressure relief areas.

(iii) Flammable solvents used in mixing operations present a potential fire or explosion vapor hazard. When flammable solvents are used, install ventilation equipment, interlocked to the mixers. Design interlocks to preclude mixer operation without ventilation. Ventilation systems must operate in the presence of solvent vapors. Vapor sensors provide warning

of flammable vapor levels approaching the lower explosive limit. Design ventilation systems to prevent propagation of an incident from one bay to others served by the same system.

(iv) Prohibit direct viewing of blender or mixer operations. Use remote means such as television or mirrors, or interpose transparent shields.

(v) Prohibit part mixing, blending or scraping of pyrotechnic composition.

(vi) The following are the minimum criteria for rotating-blade mixing operations:

(A) Assure the stability of mixers, and platforms, to prevent distortion during operation and resultant contact between the bowl and blade.

(B) Provide positive controls to physically block or stop bowl or blender head movement in case of malfunction to assure maintenance of clearances between mixer bowl and blades.

(C) Mixer blades and shaft shall be rigid and structurally strong to ensure minimum flex from weight of the mix and speed of the shaft.

(D) All mixer electrical components shall meet the appropriate NFPA Standard No. 70 electrical classification.

(E) The mixer blade shaft shall include adequate and compatible seals or packing glands to prevent migration of mix or solvent vapor into bearings. Submerged bearings and packing glands should be avoided. If used, periodically test packing glands and bearings for contamination and clean them as necessary.

(F) Establish a maintenance program to monitor wear in the mixer blade shaft and bearings to avoid excess play. Maintain a record of such checks, mixer blade adjustments, and any damage to the mixer blades and bowls. Perform operational checks of blade/plow and bowl clearances prior to the introduction of materials.

(G) Procedures must exclude dry mixing. Starting the mix with dry pockets of materials has been the cause of several serious accidents. Unless adequate amounts of solvent are added in an appropriate sequence with dry ingredients, pockets of dry mix may remain after solvent addition.

(H) Interlock power to mixers with fire protection system controls so that the mixer cannot start when the fire protection system is inoperative.

(I) Maintain grounding during charging or discharging of mixes.

(J) Maintain torque limits or amperage overload protection.

(K) Maintain appropriate solvent traps for vacuum mixing.

(8) *Pressing, extruding, and pelleting.* (i) Few pressing, extruding, or pelleting operations are sufficiently safe to operate without personnel and facility protective features. Omit protective features only when documented hazard analysis supports direct personnel involvement. Use substantial dividing walls, barricades, operational shields or intraline distance (ILD) to protect personnel from pressing, extruding or pelleting operations. (**Note:** ILD alone does not provide adequate personnel protection. For personnel protection by separation alone, use public traffic route distance (PTRD).) When it is necessary to repair, adjust, or otherwise clear a jam on a press or extruder, remove the pyrotechnic material from the hopper and the bay or press room before making such repairs or adjustments. Only those adjustments of ram speed or conveyor speed routinely controlled by the operator may proceed with material in the bay. Under no circumstances shall repair or adjustment require the use of tools with pyrotechnic material in the bay.

(ii) Limit the quantity of composition at the pressing location behind the barricade to that required for the components undergoing the pressing operation. Separate all other quantities in the bay to prevent propagation from an event in the press. The quantity of composition in the remainder of the building at any one time shall not exceed the minimum required for a safe, efficient operation.

(iii) Each individual press, extruder, or loading device shall be located in a separate building, room, or cubicle, and be designed to limit an incident to that area and protect operators. Tests or a hazard analysis may be used to demonstrate that multiple operations in a bay or cubicle do not jeopardize personnel or the facility. Due to the difficulty in positively excluding propagation to feed hoppers or similar feeds to the equipment, designs for pressure relief in case of an incident must include the quantities in such hoppers when present.

(9) *Assembly operations.* Cleanliness and isolation are important safety requirements for assembly operations. Keep individual assembly operations separate from other assembly, mixing, blending, and consolidation operations. Use separate cubicles, bays, or buildings as dictated by hazard analysis. To reduce the possibility of accidental initiation, keep pyrotechnic compositions (including fuels and oxidizers) in closed or covered containers at all times, except during physical processing (*i.e.*, requiring access to the material). This is especially important when materials are accumulating or in transit between operations. Limit quantities of pyrotechnics, including those in components to the smallest quantity necessary for safe and efficient operations.

(10) *Granulation, grinding and screening.* Operations which reduce particle size are particularly hazardous due to the energy imparted to a material with an increasing surface area, including dusts. The materials are often in their most sensitive form during these operations.

(i) Remove foreign materials using mechanical or magnetic screening from compositions reduced in particle size both before and after the size reduction operation.

(ii) Provide positive personnel protection for the operation of ball mills, hammer mills, granulators, or screeners. It is highly desirable to fill and discharge grinding, granulating, and screening equipment remotely. Hazard analysis may dictate that the cleaning of such devices also requires operator protection.

(iii) Bond and ground working surfaces, containers, and hand tools.

(11) *Transportation.* Transport pyrotechnic compositions in closed containers only. Fabricate individual containers and the transport vehicle (*e.g.*, handcart, hand truck, etc.) of the lightest materials compatible with the composition and having the requisite strength. This minimizes fragment generation if an incident occurs. ''Dead man'' brakes are often desirable on transport vehicles. Transport vehicles require protection from the weather when loading or unloading. Provide racks or other support, suited to the size and shape of composition containers, to stabilize them in transport.

(12) *Rebowling.* These operations transfer materials, typically sensitive and in small quantities, from one container to another, to recover remains of small quantities of materials, or to subdivide large masses for processing. Rebowling of dry pyrotechnics compositions with characteristics similar to initiating explosives require operational shields to protect operators.

(13) *Machining of pyrotechnic material.* (i) Conduct machining of pyrotechnic materials remotely.

(ii) Drilling and facing operations must be done to minimize friction and heat build-up. Hazard analysis should address factors including feed rate, type of composition and tooling.

(iii) Perform hand trimming and cutting of pyrotechnic candles only when supported by results of a hazard analysis specific to that composition and candle configuration.

(iv) Sawing operations require particular care to prevent work from

plunging into the saw blade, and to ensure chip removal from saw teeth before subsequent cutting passes. Plunging can occur when thin sections are force fed into coarse pitch saw blades. To prevent this, the work feed rate shall be controlled. Chip accumulation in the saw teeth is a function of the material being sawed, rate of feed, blade speed, tooth design, and flushing arrangement.

(d) *Spill control.* Spills of pyrotechnic composition and energetic ingredients pose potential hazards. Notify the responsible supervisor before any action to clean or contain the spills. SOP for pyrotechnic operations shall cover spill cleanup, either as part of the various operations detailed or as a separate procedure. The procedures shall specify which actions are to be taken by whom and in what order. The procedures shall also address recovery of the spilled material and decontamination of the area.

(e) *Management of pyrotechnic scrap and rejects.* (1) At regular intervals, remove all pyrotechnic reject materials and scraps from all operating areas. Segregate such materials by type and compatibility, and keep it separate from common wastes. Use positive identification systems for containers of these materials. Place filled containers at designated collection points.

(2) To prevent undesired reactions, use special care to preclude the mixing of water with powdered or finely granulated metals. Plastic liners for waste containers facilitate cleaning. Liners should be conductive when contents are subject to initiation by static electrical discharge.

(f) *Cleaning of pyrotechnic processing equipment.* (1) Since pyrotechnic materials are sensitive to friction, impact, or static discharge, cleaning equipment contaminated with pyrotechnic materials poses hazards. Because personnel are near the equipment being cleaned, risks may exceed those of processing. Therefore, cleaning shall receive the same planning and SOP coverage as production.

(2) Cleaning procedures must satisfy environmental and safety concerns. The use of flammable solvent solutions for flushing may require remote control. Minimize the quantity of solvents used. Control possible run-off from cleaning operations to preclude the spread of contamination.

(3) Select personal protective equipment based on hazard analysis and test data. Protective equipment must withstand the maximum credible event (MCE) when personnel perform cleaning in the vicinity of equipment and contamination.

(g) *Personal protective equipment.* (1) Engineering controls remain the primary and preferred means of providing personnel protection. Unattended operations, remote controls, substitution of less hazardous materials, and reduced quantities are all more effective than personal protective equipment or apparel. Personal protective equipment shall not be relied upon as the primary means of operator protection. Operational shields and high-speed deluge systems may offer supplemental protection. Operators must use only the protective equipment and apparel prescribed by the SOP, and that apparel or equipment must be that prescribed by hazard analysis.

(2) The minimum protective apparel for personnel exposed to open containers of pyrotechnic or energetic raw materials shall consist of the following:

(i) Cotton socks.

(ii) Conductive-soled safety shoes.

(iii) Flame-retardant coveralls, and

(iv) Hair coverings.

(3) All employees exposed to hazardous quantities of pyrotechnic compositions shall wear:

(i) Aluminized, thermally protective suit with hood and faceplate.

(ii) Aluminized, thermally protective trousers. and

(iii) Aluminized, thermally protective gloves or equivalent.

(**Note:** The definition of hazardous quantities will depend on the composition's energy output and sensitivity (as determined by hazard analysis or tests) and the nature of the operation.)

(4) Required levels of protective apparel shall be specified in appropriate SOP steps.

(5) When the protective clothing described in paragraphs (g)(2) and (g)(3) of this section is required, the design and wearing shall ensure no exposure of any area of the body. Use appropriate seals or joints to preclude flame intrusion where apparel items overlap or join. Give particular attention to possible gaps in coverage provided by the hood in order to prevent flame or hot gas impingement on the face, head, or neck. Protection of the employee's throat and lungs may require use of a self-contained breathing apparatus or supplied-air respirator from the effects of a fireball.

(h) *Reworking pyrotechnic components.* (1) Perform all repair, reassembly, or similar operations on loaded pyrotechnic compositions in a separate bay used only for that purpose.

(2) Reworking and reusing pyrotechnic material is desirable from both an economic and environmental basis. However, all rework and reuse concepts require careful analysis to assure safety. Manage all unused materials in accordance with local, State and Federal requirement.

(i) *Fire protection.* When compatible with process materials, use deluge systems for the protection of mixing and blending operations, screening, granulation, drying, and pressing or extrusion operations. Select the response time of the deluge system to minimize the damage to process equipment and facilities. Hazard analysis of the operation may dictate other applications.

**§ 184.9 Storage of ammunition and explosives.**

(a) *General.* A properly sited storage area is mandatory for AE. Earth-covered magazines (ECM) offer the greatest protection for the stored AE, and provide some mitigation of fragments and over pressures from internal explosions. Such magazines are preferred for the storage of all AE.

(b) *Magazine operational regulations.* (1) Do not store unpackaged AE and ammunition components, packing materials, conveyors, skids, empty boxes, or other such items in magazines containing AE. Limited dunnage lumber may be stored in the magazines, if it does not block exits or aisles.

(2) All AE containers shall be marked with a DoD hazard classification/division, storage compatibility group and item nomenclature.

(3) While crews are working inside magazines, keep doors unlocked to permit rapid egress.

(4) Do not store flammable liquids in magazines containing AE, except as the chemical filler of ammunition, or as a prepackaged storable liquid propellant.

(c) *Stacking.* (1) Store AE in original shipping containers or equivalent. When stacking, group and identify AE according to lots, if practicable.

(2) Use dunnage to provide ventilation to all parts of the stack.

(3) Maintain aisles between each stack to allow inspection, inventory, and removal for shipment or surveillance tests. Block storage configuration is permitted, provided ventilation of stacks exists. Maintain unobstructed aisles to permit rapid egress.

(4) Avoid more than one light (partially filled) box or pallet per lot in storage. Stack light units to be readily visible and immediately accessible. Conspicuously mark incomplete boxes to identify contents and quantities.

(d) *Unpackaged AE items and damaged containers.* (1) When necessary, store unpackaged AE items in separate magazines.

(2) Do not store damaged containers of AE in a magazine with serviceable containers of AE. Repair such containers or transfer the contents to new or serviceable containers. Close and securely fasten covers on containers of AE allowed in magazines. Close containers that have been opened before storing them again. Keep stored containers free from loose dust and grit.

(3) Do not permit loose powder, grains, powder dust, or particles of explosive substances from broken AE or explosive substance containers in magazines. In addition, clean up any spilled explosive substance as soon as possible and suspend all other work in the magazine until accomplished. (**Note:** Manage explosive residue as a waste in accordance with § 184.15.)

(e) *Maintenance and repairs to magazines.* Perform and document a hazard analysis, and implement the recommendations resulting to support the plans for maintenance and repairs of magazines containing AE.

(f) *Open storage (outdoors).* Do not store AE outdoors.

(g) *Storage of bulk initiating explosives.* Bulk initiating explosives must neither be stored dry nor exposed to the direct rays of the sun. Containers of ample size to hold the double bag of explosives are used for normal storage. Types of AE range from highly sensitive, bulk explosive substances (*e.g.*, pyrotechnics, propellants and explosives) to less sensitive, metal-cased AE (*e.g.*, bombs, torpedoes and artillery projectiles). For appropriate guidance, refer to DoD 6055.9–STD or industry standards for specific storage requirements applicable to the various types of AE.

(h) *Hazards of long-term storage.* (1) AE may deteriorate in storage. The method of packaging, extremes of temperature and humidity during storage, the length of time the AE is stored, the nature of the deterioration, and the explosive substance compositions used are factors in the rate and criticality of the deterioration. Any deterioration that decreases the stability of the AE increases the risk of auto-ignition or a handling mishap due to friction, impact or electrostatic discharge. The longer that AE remains in storage, the greater the likelihood that stocks of AE for issue or use will deteriorate. Older unstable AE material should be tracked, identified and prioritized in the contractor inventory management programs.

(2) Dispose of unstable AE stock material in accordance with the procedures and requirements of § 184.15, Collection and Destruction Requirements for AE. Disposition of unserviceable AE will be under local procedures based on the latest available technical data. Unstable AE includes substances with totally depleted stabilizer, misfired ordnance, explosive devices rendered safe by explosive ordnance disposal and any similar items. Unstable AE material is incompatible with all other AE material in storage. When available store different types of unstable AE material in separate magazines.

(3) Treat AE with unknown stability as unstable. Examples of AE to treat as unstable include non-stock material, dropped or damaged material, material in substandard packaging, unidentified material and material not receipt inspected.

**§ 184.10 Fire protection.**

(a) *General.* This section provides:

(1) General requirements for developing and implementing AE fire protection and prevention programs, and

(2) Standard fire fighting hazard identification measures to ensure a minimum practicable risk in fighting fires involving AE.

(b) *Fire plan.* (1) A written fire plan shall be prepared which itemizes the emergency functions of each department or outside agency and indicates responsible individuals and alternates.

(2) When the contractor has an internal fire department or brigade, plant officials have the responsibility for firefighting procedures, training of firefighting personnel, the use and maintenance of firefighting equipment and vehicles, the provision of water supply and alarm systems and first aid measures required in firefighting.

(3) *Firefighting agreements.* Voluntary and mutual agreements with local municipalities or industrial centers shall include AE firefighting guidelines (see paragraph (i) of this section). Contractor officials are responsible for informing the firefighters of AE hazards.

(c) *Smoking.* Smoking may take place only in safe, specifically designated and posted ''smoking locations.'' Personnel shall not wear clothing contaminated with explosives or other dangerous material in smoking locations.

(d) *Hot work permits.* A written permit shall be required for the temporary use of heat-producing equipment or devices when explosives or highly flammable materials are involved.

(e) *Portable fire extinguishers.* Hand extinguishers within buildings can extinguish fires before major damage is done. Portable equipment may prove similarly valuable outside aboveground magazines (AGM) and other buildings with AE. Portable fire extinguishers will be maintained in accordance with NFPA Standard No. 10.

(f) *Fire hazard identification system.*

(1) The contractor shall establish a fire hazard identification system. This system shall assess the relative dangers, up to the most hazardous material stored. The system must include placards on AE buildings.

(2) One such system is the DoD Fire Identification System, which consists of six fire divisions (1–6) which correspond to Hazard Division (HD) 1.1 through HD 1.6. Fire Division 1 indicates the greatest hazard. The hazard decreases with ascending fire division numbers from 1 to 4. Fire Divisions 5 and 6 refer to explosion hazards from less sensitive substances and extremely insensitive articles.

(3) *Fire division symbols.*

(i) The six fire divisions are indicated by four distinctive symbols (see Table 1 to § 184.10 and Figure 1 to § 184.10) in order to be visually recognized by the firefighting personnel from a distance. The number is shown on each symbol indicating the type of AE present. Reflecting or luminous symbols should be used. For application on doors or lockers inside buildings, half-sized symbols may be used.

(ii) The symbols are orange and each number identifying the fire division is black.

TABLE 1 TO § 184.10—FIRE DIVISION MARKINGS

| Fire division | Hazard involved | Shape |
|---|---|---|
| 1 | Mass detonation | Octagon. |
| 2 | Explosion with fragment hazard | Cross. |
| 3 | Mass fire | Inverted triangle. |
| 4 | Moderate fire | Diamond. |
| 5 | Mass Explosion (blasting agents) | Octagon. |

TABLE 1 TO § 184.10—FIRE DIVISION MARKINGS—Continued

| Fire division | Hazard involved | Shape |
|---|---|---|
| 6 | Nonmass explosion (EIDS article) | Cross. |

Figure 1 to §184.10 - Fire Division Symbols

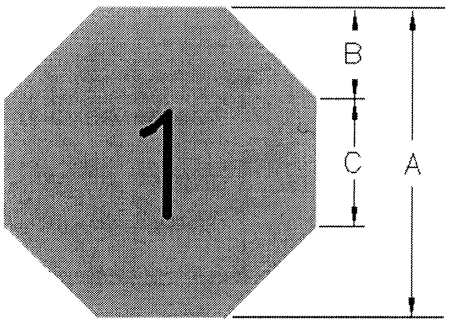


Fire Division 1 or 5

24-inch: NSN 7690-01-082-0290
12-inch: NSN 7690-01-081-9581

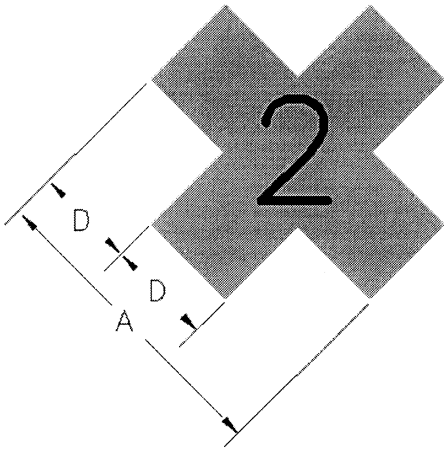


Fire Division 2 or 6

24-inch: NSN 7690-01-082-0289
12-inch: NSN 7690-01-087-7340

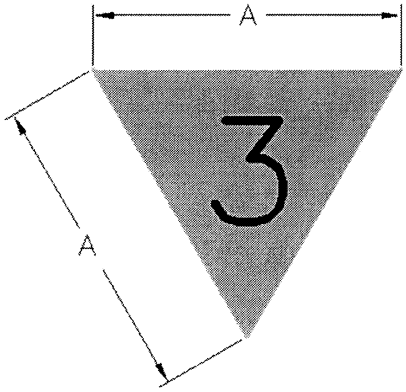


Fire Division 3

24-inch: NSN 7690-01-081-9583
12-inch: NSN 7690-01-081-9582

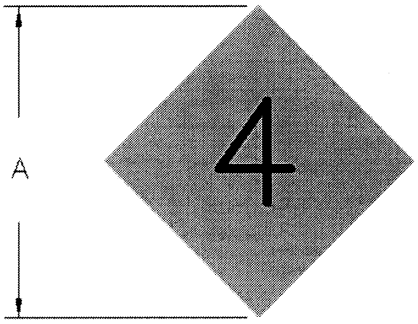


Fire Division 4

24-inch: NSN 7690-01-082-6709
12-inch: NSN 7690-01-081-9584

| Dimensions | Large Symbol | | Small Symbol | |
|---|---|---|---|---|
| | inches | metric (mm) | inches | metric (mm) |
| A | 24 | 610 | 12 | 305 |
| B | 7 | 178 | 3.5 | 89 |
| C | 10 | 254 | 5 | 127 |
| D | 8 | 203 | 4 | 102 |
| Letters (height) | 10 | 254 | 5 | 127 |
| Letters (thickness) | 2 | 51 | 1 | 25 |

COLORS (per Federal Standard 595A or GSA Catalog):

Background: Orange #12246
Letters: Black #17038

(g) *NFPA Standard no. 704 standard system for the identification of the hazards of materials for emergency response.* NFPA Standard No. 704 provides a simple, readily recognized and understood system of marking which many fire departments prefer for response. This system identifies the hazard and severity of materials and may be used in lieu of the DoD fire hazard symbols. The system identifies the hazards of a material in terms of three categories: Health, flammability and stability. This system indicates the degree of severity by a numerical rating

which ranges from four (4), indicating severe hazard, to zero (0), indicating minimal hazard. The system is based on relative rather than absolute values. For assignment of hazards, see NFPA Standard No. 49 and NFPA Standard No. 325.[4] Figure 2 to § 184.10 through Figure 4 to § 184.10. present an overview of the NFPA marking system.

Figure 2 to §184.10. - Alternate Arrangements for Display of NFPA Hazard Identification System

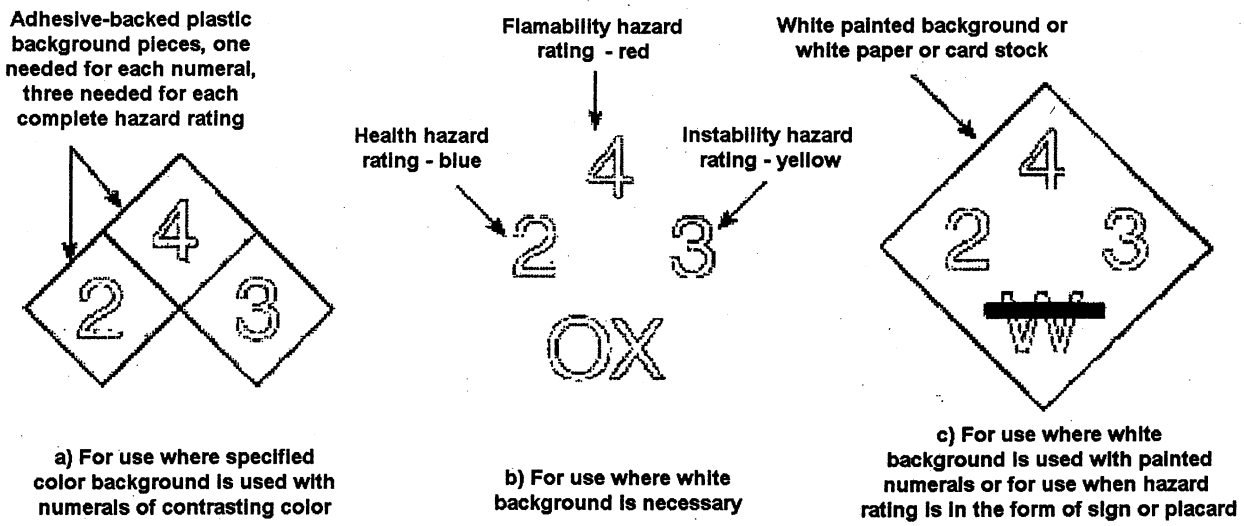


[4] NFPA Standard No. 704, NFPA Standard No. 49 and NFPA Standard No. 325 are all contained in "Fire Protection Guide to Hazardous Materials," 2001 Edition, ISBN# 087765435, available at *http://www.nfpa.org/catalog/home/index.asp.*

Figure 3 to §184.10 - Dimensions of NFPA Standard No. 704 Placards and Numerals

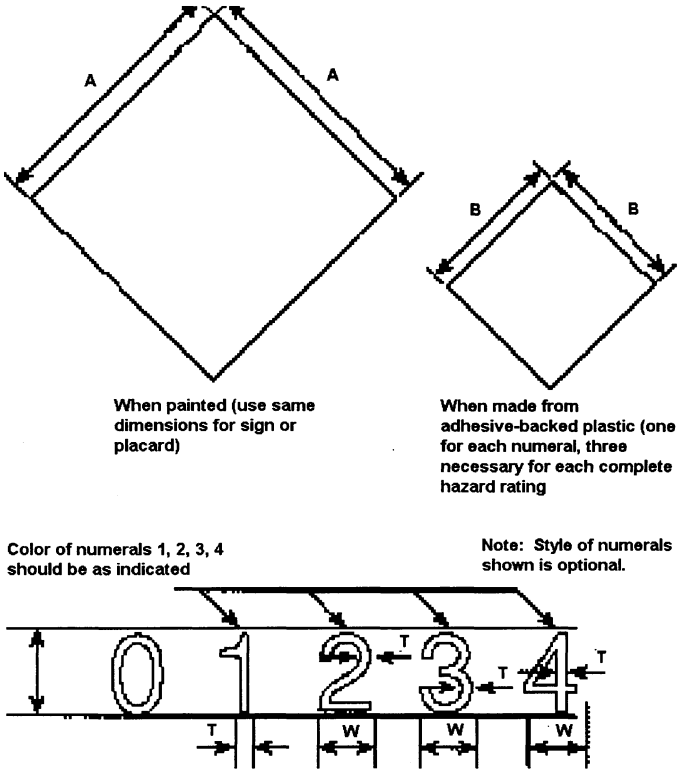


| Minimum dimensions of white background for hazard ratings (white background is optional) | | | | |
|---|---|---|---|---|
| Size of hazard ratings (in (mm)) | | | | |
| H | W | T | A | B |
| 1 (25) | 0.7 (18) | 5/32 (4) | 2.5 (64) | 1.25 (32) |
| 2 (51) | 1.4 (36) | 5/16 (8) | 5 (127) | 2.5 (64) |
| 3 (76) | 2.1 (53) | 15/32 (12) | 7.5 (191) | 3.75 (95) |
| 4 (102) | 2.8 (71) | 5/8 (16) | 10 (254) | 5 (127) |
| 6 (152) | 4.2 (107) | 15/16 (24) | 15 (381) | 7.5 (191) |

Exception: For containers with a capacity of one gallon or less, symbols may be reduced in size, provided:
This reduction is proportional.
The color-coding is retained.
The vertical and horizontal dimensions of the diamond are not less than 1 in (25 mm).
The individual numbers are no smaller than 1/8 in (3 mm).

(h) *Firefighting procedures.* (1) *General.* (i) Firefighters of AE fires must have a thorough knowledge of the specific reactions of AE exposed to heat or to fire. The firefighting forces and other essential personnel shall be briefed before approaching the scene of the fire. They shall be informed of the known hazards and conditions existing at the scene of the fire before proceeding to its location.

(ii) Fire involving AE shall be fought according to the appropriate response for hazard or fire division and the stage of the fire.

(iii) All fires starting in the vicinity of AE should be reported and should be fought immediately with all available means. However, if the fire involves explosive substance, is supplying heat to them, or if the fire is so large that it cannot be extinguished with the equipment at hand, the personnel involved shall evacuate and seek safety.

Figure 4 to §184.10 - Minimum Size of Numerals and Legibility at Distance

Arrangement and order of hazard ratings – optional form of application

| Distance at which hazard ratings must be legible (ft (m)) | Minimum size of hazard ratings required (in (mm)) |
|---|---|
| 50 (15) | 1 (25) |
| 75 (23) | 2 (51) |
| 100 (30) | 3 (76) |
| 200 (61) | 4 (10) |
| 300 (91) | 6 (152) |

Note: This shows the correct spatial arrangement and order of hazard ratings used for identification of materials by hazard.

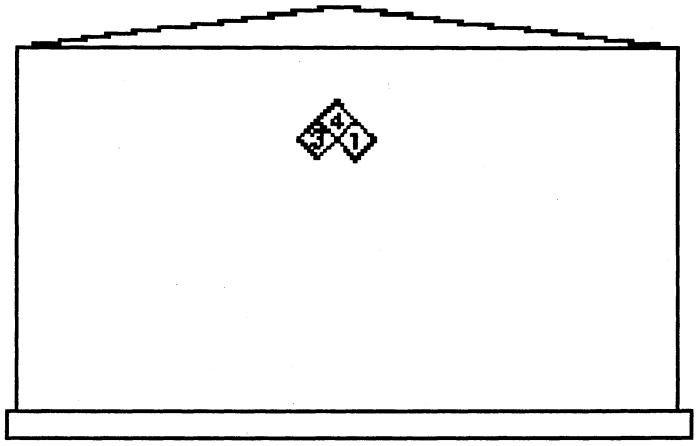


(iv) Emergency withdrawal distances for non-essential personnel are intended for application in emergency situations only and not facility siting. Emergency withdrawal distances depend on fire involvement and on whether fire division and net explosive weight (NEW) are known. Emergency authorities shall determine the withdrawal distance for essential personnel at the fire. Emergency authorities shall determine who are essential personnel.

(v) If a fire involves explosive substance, the initial withdrawal distance applied shall be at least to the inhabited building distance (IBD). See Table 2 to § 184.10. If fire does not involve explosive substances, emergency authorities shall determine the withdrawal distance based on the situation at hand.

(vi) Structures or protected locations offering equivalent protection for the distances listed in Table 2 to § 184.10 may be used in lieu of relocating personnel from the structure and/or location to the specified emergency withdrawal distance.

(vii) Contractors should develop evacuation plans for their facilities which reference the appropriate withdrawal distances as part of the emergency response plan. Contractor personnel are responsible for alerting local authorities of any imminent explosive accident on the facility which may affect the local community and for providing local authorities with the appropriate emergency withdrawal distances.

(2) *Specific.* (i) Contractors shall train operational personnel on the characteristics of explosive substances, including their reactions to heat and fire, as well as what to do in case of fire. Personnel shall not attempt to fight fires involving Hazard Division (HD) 1.1 and HD 1.2 AE. These AE detonate with a fragmentation hazard, and personnel shall evacuate immediately, using protective cover where available and activating deluge systems and fire alarms while escaping. Individuals remain in danger until they reach shelter, although reaching IBD in the open affords some safety. Exit drills should be conducted annually and during exit drills, employees shall be advised of the safest escape routes and evacuation points.

TABLE 2 TO § 184.10.—EMERGENCY WITHDRAWAL DISTANCES FOR NONESSENTIAL PERSONNEL

| Hazard division | | Unknown quantity | Known quantity |
|---|---|---|---|
| Unknown, located in facility, truck and or tractor trailer | | 4,000 ft (1,220 m) | 4,000 ft (1,220 m). |
| Unknown, located in railcar | | 5,000 ft (1,524 m) | 5,000 ft (1,524 m). |
| 1.1 and 1.5 [1] | Same as unknown facility, truck trailer or railcar as appropriate | For transportation, use 2,500 ft (762 m) minimum distance for 500 lb (227 kg) and below. Above 500 lb (227 kg), for rail cars use 5,000 ft (1,524 m) minimum distance, otherwise use 4,000 ft (1,220 m) minimum distance. Use 4,000 ft (1,220 m) minimum distance for bombs and projectiles with caliber 5 in (127 mm) or greater.<br>For facilities, use 2,500 ft (762 m) minimum distance for 15,000 lb (6,804 kg) and below. Use 4,000 ft (1,220 m) minimum distance for net explosive weights above 15,000 lb (6,804 kg) and less than or equal to 50,000 lb (22,680 kg). Above 50,000 lb (22,680 kg), use<br>$d = 105\ W^{1/3}$. | |

TABLE 2 TO § 184.10.—EMERGENCY WITHDRAWAL DISTANCES FOR NONESSENTIAL PERSONNEL—Continued

| | | |
|---|---|---|
| 1.2 (1.2.1, 1.2.2, and 1.2.3) 1.6 [1] | 2,500 ft (762 m) | 2,500 ft (762 m). |
| 1.3 [2] | 600 ft (183 m) | Twice the IBD (Table C9.T10.) with a 600 ft (183 m) minimum range. |
| 1.4 | 300 ft (91 m) | 300 ft (91 m). |

[1] For HD 1.1 and HE 1.2 AE, if known, the maximum range fragments and debris will be thrown (including the interaction effects of stacks of items, but excluding lugs, strongbacks, or nose and tail plates) may be used to replace the minimum range.
[2] For accidents involving propulsion units, it is not required to specify emergency withdrawal distances based upon the potential flight ranges of these items.
[3] This is the quantity-distance formula. 105 is the K-factor, a constant, and respresents the degree of damage which is acceptable in this situation. The distance d is in feet and W is the net explosive weight in pounds.

(ii) If the fire in a HD 1.1 or HD 1.2 building does not directly involve explosive substances and is small or in a segregated container, an attempt should be made to extinguish the fire. After summoning firefighters, responsible contractor personnel shall meet them as they approach the facility to brief them. When HD 1.1 or HD 1.2 AE is directly involved, firefighting forces should maintain IBD from the fire. The safety of personnel fighting a HD 1.1 or HD 1.2 fire depends on the accuracy of the information made available to all firefighting forces. No person shall re-enter a burning building containing HD 1.1 or HD 1.2 AE.

(iii) Personnel in the immediate vicinity of HD 1.3 AE should activate deluge systems and alarms. Unless the fire is minor, involves no explosive, and appears controllable, firefighters shall confine their efforts to prevent it from spreading to other buildings. Fire in HD 1.3 AE creates a wide area of intense radiant heat, dangerous to personnel and equipment. The firefighters should exercise extreme caution.

(iv) HD 1.4 AE presents a moderate fire hazard. Fires involving this material shall be fought until extinguished unless emergency authorities determine to evacuate.

(i) *Emergency planning.* Contractors shall develop procedures or plans to provide safety, security, and environmental protection. Plans shall be coordinated with the applicable Federal, state, and local emergency response authorities (*e.g.*, law enforcement, fire departments, and hospitals, etc.). At a minimum, those procedures or plans shall include provisions for complying with Section 301–312 of the Emergency Planning Community Right to Know Act (EPCRA).

(j) *Automatic sprinkler systems.* Properly installed and maintained automatic sprinklers reduce fire losses. They are particularly useful for load lines, AE manufacturing, receiving, shipping, inspection, and workshops, and demilitarization.

(k) *Deluge systems.* (1) Contractors may use deluge systems to supplement sprinklers, when the hazards are high, such as in powder hoppers and cutters. Rate of rise, light actuating, ultraviolet, or other quick-action devices for automatic control of deluge systems are recommended. Part controls should serve as backup.

(2) To ensure immediate drenching of AE material, the distribution outlets (nozzles, sprays, heads, etc.) should be as near the explosive's exposed surface as permitted by the outlet discharge pattern. When explosives are under tight hoods or covers inside machines, distributing outlets belong inside the enclosed space.

(3) Nonmetallic, internally-spring-held caps should protect outlets exposed to explosive vapors, gases, or dust. Upon exertion of pressure within the outlet, the cap shall immediately pop. Caps should be attached to outlets to prevent their dropping into equipment during a deluge.

(4) Water flow and pressure should be determined for the hazard.

(5) Periodic inspections of deluge systems shall ensure that they are in proper operating condition.

(6) The deluge valve should allow for automatic and part activation. Part activation devices shall be placed at the operator station or at exits in explosive operating buildings as determine by a hazard analysis.

(7) NFPA Standard No. 13 and NFPA Standard No. 15 contain basic installation rules.

(l) *Firebreaks.* A firebreak is an area of bare ground or vegetation intended to limit the probability of fires causing a hazard to AE areas. A firebreak, at least 50 ft (15 m) wide shall be maintained in all directions around magazine and AE operating buildings or locations. Barricades and other sloping ground, within the firebreak area, should retain enough vegetation to prevent significant erosion. Growth of vegetation within a firebreak shall be controlled to prevent rapid transmission of fire. Relatively long vegetation of 6 to 8 in (152 to 203 mm) in length, which is green or sparsely spread, is acceptable. Do not allow vegetation to become dry or dense. This could allow rapid transmission of fire.

**§ 184.11 Risk identification and management.**

(a) *General.* AE operations involve many hazards and risks. These include the type of hazards associated with any industrial enterprise (*e.g.*, lifting, slipping, tool use, toxic chemicals, potential exposures to environmental extremes, etc.).

(1) The evaluation of hazards and risk of mishap addressed in this section relate to processes not end products. The safety of operations is a contractor responsibility. Only the Government can accept risk for the AE it acquires and uses.

(2) A basic risk identification and management system is a necessary element of a comprehensive AE safety program. The purpose of this chapter is to address risk identification and management for all AE operations.

(b) *Risk management system.* Contractors shall have a risk identification and management system, which, as a minimum, results in the analysis of materials, equipment, and personnel capabilities. This analysis will aide in the development of a written SOP for AE contract operations. The contractor shall document the analysis and keep it as long as the SOP is active.

The analysis shall include such factors as: Initiation sensitivity, quantity of materials, heat output, rate of burning, potential ignition and initiation sources, protection capabilities of shields, various types of clothing, fire protection systems, and personnel exposure with special considerations (such as toxic or corrosive chemicals).

(1) The contractor shall perform risk analysis using personnel knowledgeable in the process, materials, equipment and relevant safety requirements.

(2) *Hazard and risk.* (i) A hazard is any condition, which, by itself or by interacting with other variables, may result in death or injury to personnel or damage to property. Controls only reduce the likelihood or severity of hazards. They do not eliminate them.

(ii) After identifying a hazard, qualified contractor personnel shall determine the associated risk. The risk analysis shall address both the severity of a resulting mishap and the probability of occurrence of a mishap. A risk deals with the mishap which arises from a hazard, considering both the severity of its potential consequences, and its likelihood of occurrence over time.

(iii) Evaluation of the hazard provides information useful for ranking the degree of risk associated with a hazard. The degree of risk indicates which hazardous conditions should receive priority for corrective action when compared to other hazardous conditions. One technique for ranking hazardous conditions is the assignment of a Risk Assessment Code (RAC). Table 1 to § 184.11 is an example of a risk matrix. The evaluation of the hazard results in the assignment of a narrative or numerical risk assessment such which management can judge the seriousness of the risk before and after action is taken to control it. Table 1 to § 184.11 shows one risk matrix used by the Department of Defense. Definitions of the code numbers and letters are contained in Table 2 to § 184.11.

TABLE 1 TO § 184.11.—SAMPLE RISK MATRIX FORMAT

| Mishap severity | Mishap probability | | | |
|---|---|---|---|---|
| | A | B | C | D |
| I | 1 | 1 | 2 | 4 |
| II | 1 | 2 | 3 | 4 |
| III | 2 | 3 | 4 | 5 |
| IV | 4 | 4 | 5 | 5 |

TABLE 2 TO § 184.11.—RISK ASSESSMENT DEFINITIONS

| Mishap severity | Mishap probability | Risk assessment codes (RAC) |
|---|---|---|
| I. A mishap which could result in the death or permanent disability, or result in the inability to deliver the contract item. | A. Likely to occur immediately | 1. Critical. |
| II. A mishap which could result in permanent partial disability or temporary total disability, in excess of three months, or result in late delivery, 30 days or more, of the contract item. | B. Probably will occur in time | 2. Serious. |
| III. A mishap which could result in lost workdays or compensation for employees, or result in the late delivery, less that 30 days, of the contract item. | C. Possible to occur in time | 3. Moderate. |
| IV. A mishap which could result in first aid or minor supportive medical treatment, or damage to process equipment or product but would not affect the delivery of the contract item. | D. Unlikely to occur | 4. Minor<br>5. Negligible. |

(c) *Analytical methods.* There are a number of analytical methods or approaches to the performance of hazard/risk analyses. The complexity of the process involved, the number of variables, and the severity of the consequences of failure should determine the level and methodology of the analysis used. The contractor shall select the level and best method for performing the analysis.

(1) As a minimum, contractors shall break the total process into successive steps and assess the hazards and risks for each process step. A sample format for conducting such an analysis is contained in Table 1 to § 184.11. Any format, which provides essentially the same information, is acceptable.

(2) A significant percentage of accidents occur during intermittent operations such as setup, startup, maintenance, repair, response to out-of-tolerance operation, and shut down/clean-up. Therefore analyses must consider intermittent operations as well as normal operations.

(3) Risk decisions must not only consider the severity and probability of a process change failure, but also recognize the criticality of operations (*e.g.*, dollar value, lead time to procure, significance to end item or process, etc.).

(d) *Information for analysis.* (1) Contractors shall develop and use a methodology to address any change to an AE operation which may present a new hazard or increase the risk of a present hazard before incorporating the change into an operation.

(2) Before introducing a change to an AE operation, contractors shall perform a hazard analysis. Contractors shall maintain documentation explaining how they will control the hazard or hazards if the analysis indicates the change will result in any new hazards, or increase the risk of present hazards. Contractors shall validate the hazard controls for the changed operation, and maintain documentation of the validation.

(3) Contractors shall use the information acquired from the hazard analysis and validation process to revise SOPs and retrain employees.

**§ 184.12 AE building design and layout.**

(a) *General.* The design and layout of AE buildings are critical considerations in explosive safety and directly impact Q–D requirements and hazardous exposures to operating personnel and valuable equipment. Preplanning and proper design can significantly reduce risk of injury and property loss.

(b) *Building exteriors.* Fire, fragment generation, venting, and evacuation are critical design parameters. Exterior wall and roof coverings of AE operating buildings shall be designed with noncombustible and, whenever possible, frangible (breakaway) construction. AE buildings should be one story, except to meet process requirements. Basements should not be used, since they expose personnel above and make evacuation difficult.

(c) *Interior walls, roofs and ceilings.* Roofs and walls of AE buildings shall be as light as practicable to vent an internal explosion and produce the smallest number of fragments. Firewalls and dividing walls constitute exceptions. AE buildings which might house loose, finely divided explosive substances require smooth, fire resistive walls and ceilings which are free from cracks and crevices. When appropriate, paint walls and ceilings with high gloss paint to minimize dust accumulation and facilitate cleaning. Avoid ledges that collect dust. Bevel and keep clean all existing ledges. Seal all wall joints and openings for wiring and plumbing against dust. Do not install suspended ceilings or construct hollow walls in Class II Hazardous Locations as defined by the NFPA Standard No. 70. Install

insulation and covering directly on the underside of the roof deck.

(d) *Floors and work surfaces.* Construct and finish floors and work surfaces to facilitate cleaning, with no cracks or crevices in which explosives could lodge and no exposed nails, screws, or bolts. Cove bases at the junctions of walls and floors should be used. All locations where exposed explosives or hazardous concentrations of flammable vapor or gas are present require non-sparking floors and work surfaces.

(e) *Substantial dividing wall.* (1) Substantial dividing walls, constructed in accordance with the requirements of Army TM 5–1300, Navy NAVFAC P–397, or Air Force AFR 88–22 (different designations for the same publication), separate independent quantities of HE so they do not need to be added when determining Q–D requirements.

(2) Avoid openings in dividing walls for conveyors, pass-through boxes, or other uses when possible. When operationally necessary, design closures with equivalent wall-strength characteristics.

(f) *Exits and doors.* Facility design and operational flow shall eliminate all explosive hazards between an operator and an exit. AE building design should include casement-type exit doors glazed with non-shattering plastic material. All interior doors should open in the direction of the flow of material through the building and should open onto unobstructed passageways.

(g) *Emergency egress.* When hazard analysis determines that standard exits and fire escapes are inadequate from work levels above the ground floor, other means of emergency egress (*e.g.*, safety chutes) shall aid evacuation.

(h) *Passageways.* Design of weather-protected passageways between buildings or magazines should include noncombustible construction and fire stops.

(i) *Roads and walkways.* The road system should provide alternate routes between inert locations without entering AE areas. Roads in AE areas shall not dead end unless they dead end at, and serve a single AE location. Facility design should provide hard-surface walkways and roads at the entrance to or between AE buildings to prevent employees from tracking such potential hazards as stones, grit, and other foreign material into operating buildings.

(j) *Windows and skylights.* The use of conventional glass in areas with a potential blast overpressure hazard creates a serious secondary fragmentation hazard. Use safety glass or non-shattering plastic materials (*e.g.*, Lexan, Plexiglas) when practical. When glazing with conventional glass is used, properly fixed plastic or wire mesh screening may reduce the hazard.

(k) *Drains and sumps.* (1) All drain lines handling explosive wastes shall have sumps or basins of sufficient capacity for the removal of explosives by settling. The drains shall have adequate capacity. be free of pockets. and have slopes of at least 0.25 in/ft (21 mm/m) to prevent explosives settling-out in the drain line. Design of sumps shall prevent suspended and settleable solid explosive material from passing beyond the sumps in the wash water, and prevent overflow from disturbing any floating solids. The settling rate of the material and the usual rate of flow shall determine the sump capacity. The design shall also permit easy removal of collected explosives, and shall allow for retention of those that float on water until they can be removed. Sump tanks or other types of construction (*e.g.*, bolted) that permit the explosives to settle in obscure or hidden spaces are not acceptable.

(2) Care shall be taken to preclude deposition of explosives from sump effluent due to drying, temperature changes, or interaction with other industrial contaminations. Sweeping and other dry collecting measures should be used to keep appreciably water-soluble explosives out of the drainage system.

(3) Drains between the source of explosive and the sump shall have troughs with rounded bottoms and with removable ventilated covers to facilitate inspection for accumulation of explosives. Waste liquids shall not run into closed drains and sewers. Inspect and clean out drains periodically to prevent the excessive buildup of explosives. Drains and sewers containing explosive waste materials shall not connect into the normal sewage systems.

(l) *Hardware.* (1) Facility design shall provide for non-sparking hardware in AE areas when hazard analyses determine sparks provide sufficient energy to initiate exposed explosive materials, explosive dusts, or flammable vapors. Avoid installing hardware (*e.g.*, piping and ducts) on blowout panels or walls

(2) Some fasteners (*e.g.*, nuts and bolts) on or near operating equipment can fall into explosives or explosive constituents and cause friction, heat, and initiation. Operating personnel shall secure such fasteners using safety wire or other methods.

(m) *Ventilation.* Exhaust fans through which combustible dust or flammable vapor pass shall use nonferrous blades, or a casting lined with nonferrous material. Motors shall meet NFPA Standard No. 70 rating for the hazard classification of its location. Maintenance personnel shall electrically bond and ground the entire exhaust system and clean and service it on a regular schedule.

(n) *Steam for processing and heating.* Process steam is that which is in direct contact with explosives, used directly in their manufacture, or which, in case of equipment failure, would exhaust directly into contact with explosives or explosive fumes. Avoid steam or hot water pipes contacting wood, paper, or other combustible materials.

(1) *Steam temperature.* The exterior of pipes shall not exceed 160 °F (71 °C). Maximum steam temperature should not exceed 228 °F (109 °C). When steam temperature must exceed 228 °F (109 °C) in hazardous locations, cover and paint the steam lines with an impervious material or otherwise protect them against contact with explosives.

(2) *Steam pressure.* Steam used for heating AE operating buildings should have a maximum pressure of 5 psi (34.5 kPa). Steam pressure shall not exceed 15 psi (103.4 kPa). When a reducing valve is used, never bypass the relief valve in a manner permitting circumvention of the pressure reduction equipment. Positive means shall prevent the production of superheated steam caused by the throttling action of reducing valves. The use of a ''water leg'' or water column is recommend to control steam pressure of 5 psi (34.5 kPa) or less. When close control of steam temperature is necessary, install indicating and recording pressure or temperature gauges. Maintenance personnel should test such devices periodically and record the test results. When electrical resistance to ground is high, properly ground steam lines where they enter buildings.

(o) *Tunnels.* The design and construction of tunnels between AE buildings requires special consideration due to possible communication of an explosion by shockwave and blast.

**§ 184.13 Safety requirements for specific AE and AE operations.**

(a) *General.* This section provides the minimum safety requirements necessary for the prevention of mishaps involving specific AE and AE operations. The contractor is responsible for analyzing each operation and developing procedures to control or eliminate hazards.

(b) *Properties of explosives.* Knowledge of properties of specific types of explosives is critical to the establishment of proper hazard controls.

(1) *Primary (initiating) explosives.* Initiating explosives include lead azide, lead styphnate, and tetracene. They are extremely sensitive to friction, heat, electrostatic discharge and impact. When involved in a fire, they may detonate.

(i) In storage, initiating explosives shall be kept wet with water or water/alcohol mixtures to reduce sensitivity. Take every precaution to prevent the liquid from freezing since this increases sensitivity. Handling of frozen initiating explosives is prohibited. Assure the water used for storage is free of bacteria forming impurities which could react to form gases and rupture containers.

(ii) Operators shall keep work areas and equipment clean and maintain good housekeeping to prevent contamination of these explosives with foreign, particularly gritty, material markedly increases their sensitivity.

(iii) Do not allow lead azide to contact copper, zinc, or alloys containing any concentration of such metals because of the likely formation of other azides that are more sensitive than the original. Similar hazards exist for other explosives.

(2) *Secondary (boostering and bursting) explosives.* Boostering and bursting explosives include tetryl, RDX, PETN, HMX and compositions manufactured with these explosives. These explosives have sensitivities between initiating explosives and those of explosives used as main charges such as TNT. They may be ignited by heat, friction, or impact and may detonate when burned in large quantities or at too great a depth. Some of these materials are toxic when taken internally or by skin contact and special precautions are necessary to protect personnel. Use local exhaust ventilation, enclosed process systems, automatic handling systems, etc., to minimize dust in the employee's breathing zone.

(3) *Main charge explosives.* Main charge explosives include TNT, tritonal, RDX , HMX, CL–20, and compositions manufactured with these explosives. Use process hazard analysis to evaluate the safety of the processing methodology, (*e.g.*, melt-cast, extrusion, press and machine, and mix-cast-cure versus sensitivity characteristics). Do not permit alkaline cleaning agents or other alkaline products in buildings where large quantities of these explosives are handled.

(4) *Other explosives.* Other common military explosives encountered include black powder and nitroglycerin (NG). Black powder is a mixture of potassium or sodium nitrate, charcoal, and sulfur, which is highly sensitive to friction, heat, and impact. It deteriorates rapidly after absorption of moisture, but retains its explosive properties indefinitely if kept dry. NG's extreme sensitivity to impact and friction is such that it is manufactured only as needed. Frozen nitroglycerin, while less sensitive than liquid, may undergo internal changes upon thawing and, if enough heat is generated, may detonate.

(5) *Research of additional properties.* Contractors must investigate pertinent properties before handling other explosive substances. Sensitivity data for the same characteristic, generated on different types of equipment, are not necessarily comparable. Contractors must thoroughly understand the sensitivity test method employed, the unit of measure in which data are presented, and the relative ranking of the explosive verses other similar explosives.

(c) *Laboratory operations.* (1) Research and development laboratories and testing facilities constitute a separate category involving guidance, restrictions, and relief from certain requirements prescribed in this part.

(2) Review each operation at facilities designed for blast and fragment confinement to ensure that the explosives limits are within the laboratory or test area capability. Decrease explosives limits and increase safe separation distances as the capability to confine fragment and blast decreases.

(3) Inspect a total confinement facility after a detonation to ensure structural integrity. It may become necessary to reduce the explosives limits to prevent future blasts from exceeding the retention capability.

(4) Review each proposed program for the laboratory or test facility to determine all potential hazards including the following considerations:

(i) Structural limitations of the facility.

(ii) Remote control viewing and operating equipment, if required.

(iii) Special safety precautions for personnel elsewhere in the building.

(iv) Safe separation distances.

(v) Required deviations from other sections of this part.

(vi) SOP, which shall, at a minimum, include the following:

(A) Protective clothing.

(B) Warning signals.

(C) Fire and other emergency procedures.

(D) Special testing of equipment needed before operations (*e.g.*, stray voltage and calibration checks).

(E) Removal of all explosives not needed for the operation.

(F) Arrangements for overnight storage of necessary explosives.

(G) Inspection and cleanup procedures after a test or detonation.

(5) Use no more explosives than absolutely required for a given operation. Perform particularly hazardous laboratory operations involving new or relatively unknown explosives by remote control. Use operational shields in these operations and in new or untested applications of explosives.

(6) When laboratories and testing facilities are shielded properly to prevent the release of fragments, the minimum incremental safe separation distances shown in Table 1 to § 184.13 apply to operations, facilities, and personnel.

(7) If the proposed storage facilities will confine the blast and fragments, or if the incremental safe separation distances are as indicated in paragraph (c)(6) of this section, up to 15 lbs (6.8 kg) of explosive substance may be stored without consideration of storage compatibility. Review the operation to determine all potential hazards prior to use as outlined in paragraph (c)(6) of this section.

TABLE 1 TO § 184.13—LABORATORY Q–D REQUIREMENTS

| Quantity (lbs) | | Distance (ft) [1] | | |
|---|---|---|---|---|
| Over | Not over | IBD | PTRD | ILD |
| **Hazard Division 1.1** | | | | |
| 0 | 1 | 40 | 25 | 20 |
| 1 | 2 | 50 | 30 | 25 |
| 2 | 5 | 70 | 40 | 30 |
| 5 | 10 | 90 | 55 | 35 |

TABLE 1 TO § 184.13—LABORATORY Q–D REQUIREMENTS—Continued

| Quantity (lbs) | | Distance (ft) [1] | | |
|---|---|---|---|---|
| Over | Not over | IBD | PTRD | ILD |
| 10 | 20 | 110 | 65 | 45 |
| 20 | 30 | 125 | 75 | 50 |
| 30 | 40 | 140 | 85 | 55 |
| 40 | 50 | 150 | 90 | 60 |
| Quantity (lbs) | | Distance (ft) | | |
| Over | Not over | IBD | PTRD | ILD |
| **Hazard Division 1.3** | | | | |
| 0 | 5 | 10 | 10 | 10 |
| 5 | 10 | 15 | 15 | 15 |
| 10 | 20 | 20 | 20 | 20 |
| 20 | 30 | 25 | 25 | 25 |
| 30 | 50 | 30 | 30 | 30 |
| 50 | 80 | 35 | 35 | 35 |
| 80 | 100 | 40 | 40 | 40 |
| 100 | 150 | 45 | 45 | 45 |
| 150 | 200 | 50 | 50 | 50 |

[1] The distance above may be used only when structures, blast mats, and so forth, can completely contain fragments and debris. If fragments cannot be contained or the quantity of high explosives exceeds 50 pounds, then the distances shall be obtained from the Q/D tables of DoD 6055.9 (reference (a)).

(d) *Heat conditioning of AE.* (1) All ovens, conditioning chambers, dry houses and other devices and facilities which are capable, in ordinary service, of heating AE to temperatures in excess of 90° F (32° C) are heat-conditioning devices. Provide heat-conditioning devices with dual independent fail-safe heat controls. For devices or facilities heated by steam only, the requirement for dual heat controls is satisfied if the steam pressure is controlled by a reducing valve (maximum pressure of 5 psi, (34.45 kPa), unless otherwise authorized) on the main building steam supply, and a thermostat.

(2) Ensure heat-conditioning devices are able to discharge overpressure from an internal explosion. Use barriers or catching devices to restrain blowout panels, doors, and other venting apparatus and prevent excessive displacement during an accidental explosion.

(3) Heat-conditioning devices must be vented to allow any gases produced to escape.

(4) Steam heat conditioning devices are preferred. However, when using electrical heating elements, locate them where there is no possibility of contact with explosives or flammable materials.

(5) Ensure the blades of a fan in a heat-conditioning device are non-sparking and install its electric motor externally. Do not re-circulate the air if the heating surfaces exceed 228° F (109° C) or if the air contains materials which could collect on the heating coils.

(6) Permit only electrical equipment and fixtures approved for use in the hazardous atmosphere in question in or on a heat-conditioning device used for explosives or flammable material.

(7) Ensure the interior of a heat-conditioning device is free of crevices, openings, and other protuberances not easily cleaned, where dust or flammable material could lodge.

(8) Interconnect and electrically ground all non-current-carrying metal parts of a heat-conditioning device.

(9) Install heat-conditioning devices in isolated locations, set up to give personnel maximum protection from the effects of an explosion. Use operational shields and other personnel protection measures when warranted.

(10) Safe separation distances or protective construction ensures against an explosives accident in one heat-conditioning device from propagating to others. Do not place hazardous materials in a room or cubicle containing a heat-conditioning device, unless it can be shown that a mishap in the conditioning device would not involve the other materials.

(11) Operating procedures for heat-conditioning devices must:

(i) Limit the explosive materials in the device to the type and quantity authorized for the specific device.

(ii) Address the critical parameters of explosives compositions before processing in a heat-conditioning device. Ensure the device does not exceed limits established for the hazardous composition being conditioned.

(iii) Check heat-conditioning device temperatures at specified intervals during operation.

(iv) Clean the conditioning devices, ducts, vacuum lines, and other parts of the equipment subject to contamination by hazardous materials, before introducing a different item or composition for conditioning.

(e) *Spray painting.* (1) Do not electrostatically spray paint loaded AE.

(2) Use water wash or dry filter-type spray booths for loaded AE.

(3) Interlock controls for ventilating fan motors for spray painting booths with the controls for the paint sprayer. With this arrangement, failure of the ventilating system will shut off power to the paint sprayer.

(4) Install high-voltage, electrically-powered, paint-spraying equipment in accordance with the requirements of NFPA Standard No. 33 as applicable.

(5) Ensure conventional equipment used for spray painting in standard spray booths meets the requirements of NFPA Standard No. 33. Electrically ground the nozzles of all spray guns to suppress static electricity.

(f) *Drying AE.* Use ovens which comply with the NFPA Standard No. 70 to dry loaded AE. Other requirements include the following:

(1) Ensure automatic thermostatic controls regulate temperatures once they reach a maximum determined by the AE involved.

(2) Equip each oven with automatic internal sprinkler systems which conform with NFPA Standard No. 13. Approved electrical heat actuated

devices, installed as required for NFPA Standard No. 70, Class I, Division 1, Group D, hazardous locations may be used for automatic operation of the system.

(3) Hot air or other means may supply heat, provided AE does not contact coils, radiators, and heating elements.

(4) In case of power failure, the heat supply for any conveyor system must automatically stop.

(5) Design electric drying units not approved for use in Class I hazardous locations so that solvent vapor concentration in the oven is kept below 25% of its lower explosive limit.

(g) *Rework, disassembly, renovation, and maintenance.* (1) Avoid conducting AE rework and disassembly operations with other AE or inert operations. When concurrent scheduling cannot be avoided, operations shall be sufficiently separated from one another to protect adjacent personnel and equipment, and prevent propagation to adjacent AE. Separation may be accomplished with Q–D, operational shielding, or the remote control of operations.

(2) Protect the worker and all other personnel from possible initiation when the force applied during rework or disassembly is known or expected to exceed assembly force.

(3) Personnel protection required during assembly operations is normally also required during disassembly or rework operations. Use lesser protection only if fully supported by a risk assessment. Verify that assembly was within specification, the surfaces are not corroded and whether sealant is present.

(4) Request specific safety guidance through contract channels when renovation or maintenance is not adequately addressed in the contract.

(h) *AE loading and associated operations.* (1) *Screening and blending HE.* Screen or visually inspect and pass over a magnetic separator bulk HE intended for processing to detect extraneous material. Do not subject HE to pinching, friction or impact in screening equipment. Thoroughly clean HE screening units without exhaust ventilation as necessary and after every shift, to prevent hazardous accumulations of explosives dusts.

(2) *Screening and blending initiating explosives.* Provide suitable operational shields for screening and blending operations involving initiating explosives. As an alternative, locate operators at barricaded ILD from screening and blending facilities.

(3) *Explosives melting.* (i) Do not exceed 228 °F (109 °F) when melting explosives and keeping explosives molten. It is permissible to use steam pressures up to 15 psi (103.35 kPa) (250 °F (121 °C) to melt or maintain TNT-based explosives in a molten state.

(ii) Construct and maintain melt unit valves and melt mix draw-off or other lines carrying molten explosives to prevent friction or impact capable of igniting the explosives. Disassemble and regularly inspect diaphragm type valves. Replace damaged or old diaphragms before cracks develop to prevent metal-to-metal contact. Construct draw-off lines to prevent exposure of threads, fastening screws, and bolts, both outside and between the flanges. Use a sealing compound to prevent explosives seepage or vapor condensation on the contacting surfaces of the bolts, flanges, screws, and nuts. Electrically bond melt mix kettle draw-off pipes to items being filled during draw-off operations. Individually ground AE unless tests indicate that contact ground is adequate.

(iii) Wet-type collectors remove dust and vapors from exhausted air, and are effective for melt mix exhausting systems. Do not re-circulate water in the wet collector unless the system removes hazardous suspensions. Discharge water retaining explosives to a containment unit designed to keep them wet. Regularly inspect and flush the exhaust and collecting equipment of explosives accumulations. Equip each kettle with a complete dust and vapor collection system when protective construction prevents propagation of a detonation between melt kettles.

(4) *Agitation.* Equip agitation nitrators, washers, and other machines with at least two means of agitation, each operating from an independent power source. A loss of power if using only one power source could result in material decomposition.

(5) *Explosives machining.* Awareness of the friction sensitivity of explosives to be machined is required. Friction sensitivity values of explosives listed in paragraphs (h)(5)(ii) and (h)(5)(iii) of this section are available for comparison. Compare sensitivity values only for identical test, methods and equipment.

(i) HE, cased or uncased, may be machined without special personnel protection and without coolant, if no metal-to-metal contact is involved, include: TNT, composition B with RDX at or below 60%, RDX compositions containing 60% or less RDX and HMX compositions containing 60% or less HMX.

(ii) HE, cased or uncased, may be machined without special personnel protection provided a coolant is directed on the tool and explosives at their point of contact and no metal-to-metal contact is involved, include: Octol, Pentolite (50–50 and 10–90), HMX compositions with greater than 60% HMX, Cyclotols, Composition B and RDX compositions with concentrations of RDX greater than 60%.

(iii) Machine other HE by remote control, and protect the operators by a suitable operational shield. Do not machine primary explosives if you can obtain desired shapes or sizes by other means (*e.g.*, forming).

(iv) Use only a single drill bit with a diameter greater than 0.25 in (0.064 cm) when an unprotected operator is involved in drilling.

(v) Permit machining of cased explosives in an operation requiring removal of metal before or after tool contact with the explosives filler. Protect operators with operational shields and machine by remote control.

(vi) Where wet machining is performed, use automatic interlocking devices to prevent machining unless coolant is flowing. Establish controls capable of stopping the machining if the coolant flow is interrupted. When coolant flow must stop for adjustment of machining tools, provide positive means to ensure that flow of coolant is restored and all automatic control devices are operating before machining resumes.

(vii) Maintain the lineal and rotational speeds of tools used for the machining of explosives at the minimum required to perform the operation safely and efficiently. The rate of feed should be consistent with the hazard analysis.

(viii) Use pneumatically-or hydraulically-driven machine tools whenever possible for machining operations on HE. Install control mechanisms for hydraulic and pneumatic equipment to prevent unauthorized personnel from tampering with speeds.

(ix) In all machining operations on cased or uncased HE, ensure tool adjustments prevent contact between moving parts of the machining equipment and metallic parts of the case or holding fixtures.

(x) Use machining tools compatible with the HE being processed. Remove dull or damaged tools from HE machining operations.

(xi) Remove explosives products resulting from machining operations with an exhaust system meeting NFPA Standard No. 70 requirements or by immersion in a stream of water flowing away from the operation.

(xii) Machine HE with unknown physical or chemical characteristics, by remote control with operators protected by operational shields during AE operations.

(i) *Assembly and crimping of complete rounds.* Separate each

assembly and crimping operation from other operations by structures or shielding sufficient to contain any fragments produced by an accidental detonation.

(j) *Pressing explosives.* (1) Conduct each pelleting operation involving black powder, tetryl, TNT, or other explosives of similar sensitivity and each operation involving the pressing or reconsolidation of explosives in a separate room or cubicle having walls of sufficient strength to withstand an explosion of all explosives present.

(2) Perform pressing or reconsolidating of explosives in small caliber rounds, tracer bodies, tetryl lead-ins, detonators, and similar items on machines having consolidating stations designed to preclude propagation between stations and provide adequate operator protection. Ensure operators stay behind tested protective barriers during such operations.

(3) Only use punches and dies in matched sets which have passed inspection and are calibrated. Regularly inspect and test by magnaflux, X-ray or similar means, all punches and dies used in explosives pressing operations.

(k) *Protection of primers.* Design equipment, transportation, and operations to protect loose primers or primers in components from accidental impact or pressure. When feasible, use a protecting cap to cover the primer.

(l) *Explosives washout and flashing facilities.* Separate washout operations in operating buildings or other locations from other operations by operational shields or proper distances. Inspect AE subjected to washout operations to ensure against residual explosives contamination. When contamination is confirmed, decontaminate prior to disposal.

(m) *Heat-sealing equipment.* Separate electric heat-sealing machines from other operations. Establish temperature limits for heat-sealing equipment with a safety factor below the ignition temperature of the explosives, propellants, or pyrotechnics involved.

(n) *Rebowling operations.* Perform rebowling operations involving primary explosives or primer mixes by remote control, with the operator protected by an operational shield.

(o) *Thread cleaning.* (1) Use nonferrous picks for thread cleaning. Stainless steel brushes are acceptable or use to clean threads of explosives-loaded projectiles if a fuze seat liner separates the thread cleaning operation from the explosive charge. Operators may use operational shields or quantity distance separation to protect them from unrelated operations.

(2) Power-actuated, thread-chasing tools may be used to clean loaded projectiles when threads are imperfect because of previously applied sealers. However, the operation must be performed within a separate cubicle and by remote control. Hand-operated thread-chasing tools may be used when no explosives are present in the threads.

(3) Do not cut threads or correct cross threads on projectiles containing explosives. Straightening crossed threads is considered thread cutting.

(p) *Profile and alignment gaging operations.* (1) Use operational shields to enclose each profile and alignment gauging operation, excluding small arms ammunition, to protect adjacent operations. Develop the layout of equipment and operational procedures to minimize personnel injury and property damage in case of an accident.

(2) When chamber gauging large caliber fixed ammunition, point the gauge toward a dividing wall or other barrier. Use the same operator to insert and remove each round. Never leave a round in the gauge. Gauge rounds of mortar ammunition before attaching propellant increments and, unless prohibited by the design characteristics, before assembly of the ignition system.

**§ 184.14 Test and testing requirements.**

(a) *General.* The contractor is responsible for the safety of testing programs. Test programs include any and all tests, evaluations, quality assurance functions tests, or similar situations where AE response to stimulus is the objective.

(b) *Basic principles for test operations.* The following safety precautions apply where pertinent:

(1) Conduct all test operations in accordance with procedures developed in accordance with § 184.3 (c) and § 184.6(i), using a hazard analysis as the basis for the procedures.

(2) Wherever possible, substitute inert materials for live AE. When only live AE will meet test objectives, protect test personnel. Use remote control of operations, barricades, shields, remote methods of shutting down the test operation, or other appropriate methods of eliminating exposure to personnel. By definition, all tests involve some level of uncertainty. Therefore test methods and procedures must address all credible malfunctions, or non-function potentials and the appropriate reaction to them.

(3) Assembly and testing requirements specific to each ammunition and weapon system are contained in the appropriate technical part and end-item specifications which should be incorporated into procedures. The hazard analysis process should identify specific hazards of assembly and test. It is particularly important to develop procedures for the guidance of unique tests (*e.g.,* fuze function, fragmentation, thermal effects, barricade test) which do not duplicate assembly, disassembly, or test requirements described in technical parts or other government publications. Include disposal procedures for damaged energetic materials and ordnance items. The following are general assembly and testing safety requirements.

(4) Do not allow test conditions to compromise basic AE safety considerations, for example, compatibility of materials, quantity control, quantity distance, exposure of personnel to blast (including hazardous noise levels), fragments and thermal effects, bonding and grounding, and personal protective equipment.

(5) Recognize and plan for the mitigation of overpressure (including sound), fumes, dust, fragments, thermal effects and catastrophic failure of test equipment or barricades which can occur during or as the result of testing.

(6) Clearly identify expended ordnance contaminated with residual energetic or other hazardous materials. Include decontamination steps in the test operations procedure.

(7) Some testing, such as electrical continuity, built-in-test, or weapon functionality on components or all-up-rounds will require remote operations. Perform this testing with approved test equipment at a facility site-approved for the operation. When this is the case, the following requirements apply:

(i) Do not expose any test personnel to operations that have a high probability of resulting in a detonation, or to test operations that involve intentional detonations. Protecting personnel from all fragments and from overpressures exceeding 2.3 psi (overpressure at k24) meets that requirement. Distance, operational shields (see paragraph § 184.3(g) of this part), or structural design of buildings and bays involved, or a combination of these, can provide this protection.

(ii) Protection by distance must include consideration of fragments as well as overpressure. For many test operations involving relatively small quantities of explosives, the distance at which the blast over pressure drops to the 2.3-psi level is less than the minimum fragment distance. When this occurs, the minimum distance between the operation and any personnel is the fragmentation distance. Use of barricades, earth covered shelters, or structural elements to control the fragmentation hazard are acceptable when it is possible to demonstrate this

protection by test or engineering design. Tests normally require an overcharge of 25% NEW greater than the maximum expected charge weight for testing, when testing is the sole proof of protection.

(iii) Provision of protection by structural design, whether by itself or in conjunction with distance, requires specialized structural designs. Army TM 5–1300, Navy NAVFAC P–397, or Air Force AFR 88–22 (different designations for the same publication, provides assistance for these designs. When using this publication, Protection Category 1 is the level of design for personnel protection. Designs based on lesser levels of protection are acceptable, depending upon the level of risk to contract performance deemed acceptable by the PCO when personnel exposure is not an issue.

(iv) Spalling and other phenomena of structural failure are part of the design considerations when using the referenced part for protection. Spalling is the ejection of material from the back face of a slab or beam as the result of an explosion adjacent to the front face. When not using the part for structural designs, spalling protection must be part of the design and test of structural elements. When test cell walls do not extend through the ceiling of the structure, it is possible for overpressure and debris from an explosion to escape over the top of the cell and injure personnel near the cells. Designs must provide protection from such an eventuality. Similarly, when cell walls extend through ceilings and roofs, these structural elements must be strong enough to resist the effects of overpressure and fragments, protecting personnel below.

(v) Install interlocks to prevent operator exposure to operations when doors on any equipment or cells used for explosives processing function as operational shields. Do not install door closure controls within cells. Design cell door release devices to prevent personnel from being stuck by a closing door and to allow egress from the cell. These may require designs to become inoperative to prevent the overpressure of an explosion from opening the door. Ensure that any pass-throughs between cells prevent the transmission of fragments or damaging overpressures. Typically, such pass-throughs have doors interconnected so that only one door can open at a time.

(vi) Establish a warning system of flags, lights or sound signals during testing operations. Provide personnel who are not familiar with the warning system in test areas, and equipped test areas with a telephone and/or radio to permit communication during testing operations.

**§ 184.15 Collection and destruction requirements for AE.**

(a) *General.* This section provides safety requirements for the collection and destruction of AE. *It contains more detailed information than other portions of this part due to the higher risks of these operations.* The Environmental Protection Agency (EPA) has developed regulations which apply to contractors and may impose requirements beyond those in this part. Contractors shall avoid compromising explosive safety for environmental considerations.

(b) *Protection during disposal operations.* (1) Operational shields or special clothing shall protect personnel during disposal operations. Fragmentation hazards require, at a minimum, overhead and frontal protection for personnel. Contractors detonating AE may locate personnel shelters at the appropriate IBD for the AE NEW. Personnel shall use protective structures when destroying AE by detonation and when burning AE that may detonate. Personnel shall not approach the burning site, but shall observe an appropriate waiting period after the fire is out.

(2) Personnel shall never work alone during disposal and destruction operations. Warning signs or lights, roadblocks, or other effective means shall restrict the area. One person, available in an emergency, should observe from a safe distance while another performs the operations.

(c) *Collection of AE.* (1) *Water-soluble materials.* Use sufficient water to neutralize ammonium picrate (Explosive D), black powder, and other soluble materials to ensure their complete dissolution. Dissolve as little material as practicable at one time. Sweeping floors before washing them down reduces the amount of dissolved material in the wash water. Consult experts when uncertainty exists concerning the purity and composition of wash water.

(2) *Solid wastes.* Collect explosives-contaminated solid waste material, place in closed containers, and promptly deliver to buildings for treatment or holding, or to the burning ground for destruction.

(3) *Explosives dusts.* (i) The contractor may use a vacuum system to remove HE dusts such as TNT, tetryl, Explosive D, Composition B, and Pentolite. The preferred removal method for explosives is a ''wet collector'' which moistens the dust near the point of intake and keeps it wet until disposal. Collect Explosive D in a dry system.

(ii) The contractor may collect more sensitive explosives such as black powder, lead azide, lead styphnate, tracer, igniter, incendiary compositions, and pyrotechnic materials by vacuum, provided they are kept wet close to the point of intake. Collect each type representing a different hazard separately so that black powder, for example, cannot mix with lead azide. The vacuum system should release any build up of gases. Confine the use of vacuum systems for collection of sensitive explosive substances to operations involving small quantities of explosives, that is, operations with fuzes, detonators, small-arms ammunition, and black powder igniters. To minimize the fire and explosion hazard, collect scrap pyrotechnic, tracer, flare, and similar mixtures in No. 10 mineral oil or equivalent. Collect dry explosive dust in an oil-filled receptacle available at each operation throughout the shift. The oil level shall maintained at least 1 inch above the level of any pyrotechnic mixture in the container. Some pyrotechnic compositions float on oil. If it occurs use a wooden plunger to submerge the material. Remove containers of scrap explosive for disposal from the operating buildings at least once per shift. When using oil, use the appropriate rated Class B firefighting equipment.

(d) *Design and operation of collection systems.* (1) Design collection systems and chambers to prevent pinching thin layers of explosives or explosives dust between metal parts. Pipes or ducts used to convey dusts require flanged, welded, or rubber connections. The contractor shall not use threaded connections. The system shall prevent explosive dusts from accumulating in parts outside the collection chamber. Pipes or ducts conveying high explosives shall have long radius bends. Systems for propellant powder may use short radius bends, provided they are stainless steel, with polished interiors. Minimize the number of vacuum application points. Use wet primary collectors when possible. The design of the vacuum collection system should provide a separate exhaust line to the primary collection chamber from each room. If this is not possible, a common header shall service no more than two bays. Keep short lengths of vacuum lines from the application points to the wet collectors. A single secondary collector shall service as few primary collectors as possible. The contractor shall connect not more than two dry primary collectors to a single secondary collector (wet or dry type). Vacuum systems that are permanently attached

to the explosive dust-producing machine may increase the likelihood of detonation propagation through the collection system. Recommend using partly operated vacuum systems unless dust concentrations pose an explosion or health hazard. Partly operated hose connections to explosive dust-producing machines should not interconnect.

(2) Install two collection chambers in series ahead of the pump or exhauster to prevent explosives dust from entering the vacuum producer in a dry vacuum collection system.

(3) There shall be no metal-to-metal contact on slide valves for vacuum collection systems. An aluminum slide operating between two ebonite spacer bars or similar compatible materials will eliminate unacceptable metal-to-metal contact.

(4) Install dry-type portable vacuum collectors, limited to 5 lbs (2.3 kg) of explosives, in a separate cubicle having substantial dividing walls, or outside the building. Never install type of collector in the bay or cubicle with the explosives. The contractor may use wet-type portable vacuum collectors in explosives operating bays or cubicles, provided limited quantities of explosives in the collector meet the requirements of paragraphs (e)(1) through (e)(3) of this section. For dry collection over 5 lbs (2.3 kg) or wet collection over 8 lbs (3.64 kg) of explosives, the provisions of paragraphs (e)(1) through (e)(3) of this section also apply.

(5) The design of wet collectors shall provide for:

(i) Proper immersion of explosives.

(ii) Breaking up of air bubbles to prevent release of airborne particles, and

(iii) Prevent moistened particles of explosives from entering the small piping between the collector and the exhauster or pump

(6) At least once every shift, remove the explosives dust from the collection chamber to eliminate unnecessary and hazardous concentrations of explosives. Clean entire system on a regular basis to remove residual contamination, with parts dismantled as necessary.

(7) Electrically bond the entire explosives dust collection system to the grounding system. Test the electrical bonding/grounding system in accordance with § 184.6(f)(5).

(8) Shield personnel workstations from vacuum systems.

(e) *Location of collection chambers.* (1) Whenever practicable, locate dry-type explosives dust collection chambers, except portable units, in the open, outside operating buildings, or in buildings set-aside for that purpose. Provide a barricade or operational shield appropriate for the NEW involved to protect operating personnel from blast (2.3 psi) and fragments from the collection chamber. At least 3 ft (1 m) should separate the collection chamber from the barricade or operational shield.

(2) When locating dry-type collection chambers outside the operating building is not feasible, set aside a separate room for this purpose in the building. The contractor shall not allow personnel to work or pass through the dry-type collection chamber room. Walls separating the room from other portions of the operating building shall meet the requirements for operational shields for the NEW in the collection chamber. Subdivide rooms with multiple collection chambers into cubicles with only one collection chamber per cubicle.

(3) Stationary and portable wet-type collectors in operating bays or cubicles shall not exceed 5 lbs (2.3 kg) NEW. When placed in separate cubicles, quantities may increase to 8 lbs (3.64 kg). See paragraphs (e)(1) and (e)(2) of this section for location requirements of wet collectors, containing more than 8 lbs (3.64 kg),

(f) *AE awaiting destruction.* Maintain IBD from AE destruction sites and explosives stored in the open. If adequately protected from frontal and overhead hazards, ILD separation between AE material awaiting destruction and AE destruction sites is acceptable. Protect all AE awaiting destruction from accidental ignition or explosion from fragments, grass fires, burning embers, or blast originating from the destruction site.

(g) *Containers for waste explosives.* Use appropriate containers for AE waste to prevent leakage and spillage of contents. The contractor shall not pinch or rub explosives during container closing and opening. Clearly mark containers to identify contents. Do not use containers constructed of spark-producing or easily ignited material.

(h) *Destruction sites.* (1) *Site criteria.* (i) Locate AE destruction sites as far as possible from magazines, inhabited buildings, public highways, runways, taxiways, and operating buildings. The minimum separation distance is 1,250 ft (381 m) or the applicable fragmentation distance, unless pits or similar aids (*e.g.,* natural barricades) limit the range of fragments. Since burning explosives may detonate, contractor shall use appropriate protective barriers or separation distances for the safety of personnel and property. To prevent secondary fragments, do not burn or detonate AE on concrete, or in areas having large stones or crevices.

(ii) For separation distances less than 1250 ft (381 m), use DoD approved documentation to determine fragment and debris throw in calculating the appropriate IBD based on the maximum NEW of AE present.

(iii) Recommend keeping firefighting equipment available to extinguish grass fires and to wet down the area between burnings and at the close of operations.

(iv) The contractor should not dispose of ordinary combustible rubbish near AE and AE-contaminated material destruction sites.

(2) *Materials and equipment for detonating explosives.* (i) Contractor should initiate detonations of AE with electric blasting caps and blasting machines or permanently installed electric circuits energized by storage batteries or conventional power lines. When covering AE for disposal with earth, do not bury the blasting cap. Prime the initiating explosives with sufficient primacord to allow connecting the blasting cap above ground level.

(ii) Special requirements for using electric blasting caps and electric blasting circuits follow.

(A) Never hold a blasting cap at the explosive (output) end. Hold the wire lead end of the cap between the thumb and the index finger. Whenever possible, point the explosive end of a hand-held cap down, away from the body, and to the rear.

(B) Do not remove the shunt from the lead wires of the blasting cap until ready to connect them to the blasting circuit, except during electrical continuity test of the blasting cap and lead wires.

(C) Carefully hold the lead wires so that there is no tension where they connect to the cap and partly straighten the lead wires. Do not throw, wave through the air, or uncoil by snapping as a whip.

(D) Use blasting circuit wires in twisted pairs. Operators shall keep blasting circuit wires twisted together and connected to ground at the power source and twisted at the opposite end at all times except when actually firing the charge or testing circuit for continuity and extraneous electricity. Never connect the blasting cap to the blasting circuit wires unless the blasting circuit wires are shorted and grounded at the ends near the power source.

(E) Maintain safe distances between radio frequency (RF) energy transmitters and electric blasting, demolition operations, and unshielded electric blasting caps.

(F) Transport blasting caps in closed metal boxes wherever exposure to RF energy and extraneous electricity is possible (*i.e.,* vehicles equipped with two-way radios).

(G) Operators should follow these procedures when connecting electric blasting cap lead wires to the blasting circuit wires.

(*1*) Test the blasting circuit wires for electrical continuity.

(*2*) Test the blasting circuit for extraneous electricity. To test, arrange a dummy test circuit similar to the actual blasting circuit, except substitute a radio pilot lamp of suitable voltage for the blasting cap. If the pilot lamp glows, indicating potentially dangerous amounts of RF energy, stop blasting operations using electric blasting caps. Blasting operations may resume using non-electric blasting caps and safety fuse. The contractor may substitute other test instruments (*e.g.* the DuPont ''Dectect-A-Meter'' or ''Voltohmeter,'') for the radio pilot lamp. If the potential source of extraneous electricity is radar, television, or microwave transmitters, test the actual blasting circuit, including the blasting cap but without other explosives, for extraneous electricity. Protect personnel performing such tests from the effects of an exploding blasting cap.

(*3*) Test the blasting cap and its lead wires for electrical continuity. The individual who removes the shunt should ground himself or herself by grasping the blasting circuit wire prior to performing the operation in order to prevent accumulated static electricity from firing the blasting cap.

(*4*) Assure the blasting circuit wires are shorted and grounded at the power source and connect the blasting cap lead wires to the blasting circuit wires.

(*5*) Evacuate all but two persons from the area. One person shall partially retreat and act as safety observer. The other person shall maintain physical possession of a safety device that locks out the blasting circuit (*e.g.,* plug, key, pigtail, etc.) and shall place blasting cap onto charge. Both persons will then retreat to personnel shelter.

(*6*) Untwist blasting circuit wires at power source and test for continuity. A galvanometer shall be used to test the firing circuit for electric continuity before connection to the blasting machine.

(*7*) The individual assigned to make the connections shall confirm that everyone in the vicinity is in a safe place before connecting the blasting circuit wires to the power source and signaling for detonation. This individual shall not leave the blasting machine or its actuating device for any reason and when using a panel, shall lock the switch in the open position until ready to fire, retaining the only key. Connect blasting circuit wires to power source and fire the charge.

(*8*) After firing, disconnect blasting circuit wires from power source, twist the wires together, and connect to ground.

(*9*) Suspend blasting and demolition operations when electrical storms are in the vicinity. At the first sign of an electrical storm, short-circuit the blasting cap lead wires and the blasting circuit wires, and evacuate all personnel from the demolition area to a safe location.

(H) Use non-electric blasting caps and safety fuses when conditions prevent the use of electrical initiators for detonation. At the beginning of each day's operation and whenever using a new coil, test the safety fuse's burning rate. The fuse shall be long enough for personnel to evacuate to a safe distance. Under no circumstances shall the fuse length be less than that required for a 2-minute burn time. Use appropriately designed crimpers to affix fuses to detonators. Use only fuses small enough in diameter to enter the blasting cap without forcing. All personnel, except the fuse-actuator, shall move to the personnel shelter or leave the demolition area before ignition.

(3) *Servicing of destruction site.* (i) Vehicles transporting AE to burning or demolition grounds shall meet the requirements of this part. No more than two persons shall ride in the cab. No one shall ride in the truck bed.

(ii) The contractor should unload vehicles immediately then move the vehicle from the burning or demolition area until completion of destruction operations. The contractor should not open AE containers before the vehicle departs.

(iii) The contractor shall place and open all AE containers set for destruction at least 10 ft (3.1 m) from each other and from explosives material previously set out to prevent rapid transmission of fire if premature ignition occurs.

(iv) Close and move empty containers to prevent charring or damage during destruction of AE. Delivery vehicles shall pick up and remove empty containers on the next trip.

(i) *Destruction by burning.* (1) No mixing of an explosive with extraneous material, other explosives, metal powders, detonators, or similar items shall occur without authorization.

(2) Because of the danger of detonation, do not burn AE in large quantities or in containers.

(3) *Beds for burning explosives.* (i) A bed of easily combustible material at least two inches thick should be positioned under the explosive bed to ensure complete consumption of wet explosives. The combustible material should extend at least two inches beyond the edges of the explosive bed. If necessary, the thickness and extent of the combustible material may be adjusted, based on actual experience at the site.

(ii) The explosive bed shall be no more than 3 in (76 mm) deep.

(iii) The ignition train of combustible material leading to the explosives bed shall be positioned so that both it and the explosive bed can burn in a controlled fashion and not propagate to any other explosive treatment areas.

(iv) No burning shall take place when wind velocity exceeds 15 mph (24 km/h).

(v) For direct ignition of a combustible train, use either a safety fuse long enough to permit personnel to reach protective shelter or a black powder squib initiated by an electric current controlled from a distance or protective structure. Tying two or more squibs together may be necessary to ensure ignition of the combustible train.

(vi) Burning solid propellants ignited by squibs do not require combustible materials.

(vii) Evacuate sites of misfires for at least 30 minutes, after which two qualified persons shall approach the position of the explosives. One shall examine the misfire and the other shall act as backup. The backup shall watch the examination from a safe distance, behind natural or artificial barriers or other obstructions for protection. The backup shall follow contractor procedures should an accident occur.

(4) Burn loose, dry explosives without combustible material, if the ground can remain uncontaminated. Check the ground for residual unburned explosive for the safety of personnel and operations. Do not pour volatile flammable liquids, at any stage, over explosives or the underlying combustible material to accelerate burning.

(5) Always burn wet explosives on beds of non-explosive materials.

(6) Burn explosive powders (*e.g.,* RDX, HMX, etc.) in desensitized form to promote safe handling and prevent detonation.

(7) Empty oil-covered pyrotechnic materials from containers into shallow metal pans before burning. The contractor may burn explosives in the open containers.

(8) Prepare separate parallel beds of explosives for burning by not less than

150 ft (46 m). Take care to prevent material igniting from smoldering residue or from heat retained in the ground from previous burning operations. Saturate a burned-over plot with water, then check for hot spots, or allow 24 hours to elapse before the next burn.

(j) *Destruction by detonation.* (1) Detonation of AE should occur in a pit of at least 4 ft (1.3 m) deep and be covered by at least of 2 ft (0.6 m) of earth. Place the components on their sides or in a fashion to enhance complete destruction. Place demolition blocks on top of the AE and secure them with earth packed over them. Under certain circumstances, the contractor may substitute bangalore torpedoes or bulk HE for the demolition blocks. (**Note:** Detonations do not require a pit at remote demolition areas.)

(2) Local regulations, atmospheric conditions, earth strata, etc. shall dictate quantities destroyed at one time, both in pits and open sites. Considering these variables, determine the acceptable NEW based on criteria in Chapter 9, DoD 6055.9–STD. The contractor should use this procedure for destruction of fragmentation grenades, HE projectiles, mines, mortar shells, bombs, photoflash munitions, and HE rocket heads separated from their motors.

(3) Search the surrounding area for unexploded AE after each detonation.

(4) In cases of misfires, follow established procedures. Wait a minimum of 30 minutes before approaching the site.

(k) *Destruction by neutralization.* Methods of neutralization include dissolving in water-soluble material or chemical decomposition. The contractor is responsible for investigating which of these is most appropriate. The contractor shall comply with all applicable local, state, and Federal requirements.

(l) *Destruction chambers and incinerators.* (1) *General.* The contractor should destroy small, loaded AE components (*e.g.,* primers, fuzes, boosters, detonators, activators, relays, delays, and all types of small-arms ammunition) in destruction chambers or deactivation furnaces. The contractor should use explosives scrap incinerators for burning tracer and igniter compositions, small quantities of solid propellant, magnesium powder, sump cleanings, absorbent cleaning materials, and similar materials. The contractor should equip destruction chambers and incinerators with suitable pollution control devices (*e.g.,* multiple chamber incinerators with thermal incinerator afterburners) and concrete barricades. The final incineration should take place at 1400 °F (760 °C), minimum.

(2) *Operation of incinerators.* (i) The contractor shall not operate the feeding conveyor until the incinerator temperature is high enough to ensure complete destruction. The contractor should install temperature recording devices.

(ii) To remove accumulated residue, shut down and thoroughly cool the incinerators. Make repairs only during shutdown. Personnel entering the incinerator to clean it shall wear respiratory protection to prevent inhalation of toxic dusts or fumes (*e.g.,* mercury from tracers or lead from small-arms ammunition).

(3) *Operation of destruction chambers and deactivation furnaces.* (i) Operation of destruction chambers and deactivation furnaces requires remote control.

(ii) Operators shall not approach the unprotected side of the concrete barricade, for any other reason, until enough time has elapsed for explosives in the chamber to react. Perform regular inspections to keep the feed-pipe chute or conveyor obstruction free.

(iii) Feed components into the chamber a few at a time. Post the exact number permitted at one time for each type of component in a place easily seen from the operator's working position.

(iv) Install guards on conveyor-feeding mechanisms to facilitate feeding and to prevent items from jamming or falling.

(m) *Support in disposal of waste.* The contractor shall request instructions from the responsible ACO if, at end of contract, there is excess or residual Government-owned AE and the contract does not address disposition. A contractor having difficulty safely disposing of residual (scrap) AE related to contractual operations may request help from the ACO.

### § 184.16 Construction and siting criteria.

Please refer to DoD 6055.9, Chapter 5 for guidance on facilities construction and siting.

## Appendix A to 32 CFR Part 184—Glossary

This appendix defines terms and phrases used in this part, which are associated with ammunition, explosives, and other dangerous materials. For those terms that are not found in this glossary please refer to DoD 6055.9–STD for Q–D terminology. Because of contractual reasons some terms of this part may be define differently.

(a) *Aboveground magazine.* Any open area or any structure not meeting the requirements of an ECM which is used for explosives storage.

(b) *Administration area.* The area encompassing administrative buildings which serve the entire installation. This excludes offices located near and directly serving explosives storage and operating areas.

(c) *Aircraft passenger transport operations.* Passenger transport operations for the purpose of applying explosives Q–D tables are defined as follows: Passenger transport traffic involving military dependents and civilians other than those employed or working directly for DoD Components. The following are not considered passenger transport operations.

(1) Infrequent flights of base and command administrative aircraft that may on occasion, provide some space available travel to authorized personnel.

(2) Travel of direct hire appropriated funds personnel employed by any DoD Component.

(d) *Ammunition and explosives.* Includes (but is not necessarily limited to) all items of U.S.-titled (owned by the U.S. Government through DoD Components) ammunition: propellants, liquid and solid. pyrotechnics. high explosives. guided missiles. warheads. devices. devices, and chemical agent substances and components presenting real or potential hazards to life, property and the environment. Excluded are wholly inert items and nuclear warheads and devices, except for considerations of storage and stowage compatibility, blast, fire, and non-nuclear fragment hazards associated with the explosives.

(e) *Ammunition and explosives aircraft cargo area.* Any area specifically designated for:

(1) Aircraft loading or unloading of transportation configured ammunition and explosives.

(2) Parking aircraft loaded with transportation configured ammunition and explosives.

(f) *Ammunition and explosives area.* An area specifically designated and set aside from other portions of an installation for the development, manufacture, testing, maintenance, storage or handling of ammunition and explosives.

(g) *Auxiliary building.* Any building accessory to or maintained and operated to serve an operating building line, plant, or pier area. Explosive materials are not present in an auxiliary building, such as powerplants, change houses, paint and solvent lockers, and similar facilities.

(h) *Barricade.* An intervening barrier, natural or artificial, of such type, size, and construction as to limit in a prescribed manner the effect of an explosion on nearby buildings or exposures.

(i) *Blast impulse.* The product of the overpressure from the blast wave of an explosion and the time during which it acts at a given point (that is, the area under the positive phase of the overpressure-time curve).

(j) *Blast overpressure.* The pressure, exceeding the ambient pressure, manifested in the shock wave of an explosion.

(k) *Cavern storage site.* A natural cavern or former mining excavation adapted for the storage of ammunition and explosives.

(l) *Chamber storage site.* An excavated chamber or series or excavated chambers especially suited to the storage of

ammunition and explosives. A cavern may be subdivided or otherwise structurally modified for use as a chamber storage site.

(m) *Change house.* A building provide with facilities for employees to change to and from work clothes. Such buildings may be provided with sanitary facilities, drinking fountains, lockers and eating facilities.

(n) *Classification yard.* A railroad yard used for receiving, dispatching, classifying, and switching of cars.

(o) *Closure block.* A protective constructive feature designed to seal the entrance tunnel to an underground storage chamber in the event of an explosion within the chamber. Magae blocks are passive closures that are driven by the blast from a normally open to a closed position. Klotz blocks area active closures, operated by a hydraulic system to move from normally closed to an open position (for access).

(p) *Compatibility.* Ammunition or explosives which may be stored or transported together without significantly increasing either the probability of an accident or, for a given quantity, the magnitude of the effects of such as accident.

(q) *Debris.* Any solid particle thrown by an explosion or other strong energetic reaction. For aboveground detonations, debris usually refers to secondary fragments, which are transported by a strong flow of detonation gasses.

(r) *Debris trap.* A protective construction feature in an underground storage facility which is designed to capture fragments and debris from a detonation within the facility. This usually accomplished by using the inertia of the material to separate from the detonation gas stream.

(s) *Deflagration.* A rapid chemical reaction in which the output of heat is enough to enable the reaction to proceed and be accelerated without input of heat from another source. Deflagration is a surface phenomenon with the reaction products flowing away from the unreacted material along the surface at subsonic velocity. The effect of a true deflagration under confinement is an explosion. Confinement of the reaction increases pressure, rate of reaction and temperature, and may cause transition into a detonation.

(t) *Demilitarize.* Any disarming, neutralizing, and any other action rendering ammunition and explosives innocuous or ineffectual for military use.

(u) *Detonation.* A violent chemical reaction with a chemical compound or mechanical mixture evolving heat and pressure. A detonation which proceeds through the reacted material toward the unreacted material at a supersonic velocity. The result of the chemical reaction is exertion of extremely high pressure on the surrounding medium forming a propagating shock wave which is initially of supersonic velocity. A detonation, when the material is located on or near the surface of the found, is characterized normally by a crater.

(v) *Dividing wall.* A wall designed to prevent, control, or delay propagation of an explosion between quantities of explosives on opposite sides of the wall.

(w) *DoD mishap.* An unplanned event or series of events which results in damage to DoD property, occupational illness to DoD military or civilian personnel, injury to DoD military personnel on or off duty, injury to on-duty civilian personnel, damage to public and private property, or injury and illness to non-DoD personnel as a result of DoD operations.

(x) *Donor/Acceptor.* A total quantity of stored ammunition may be subdivided into separate storage units in order to reduce the MCE, and, consequently, the Q–D of an accidental detonation. The separation distances, with or without an intervening barrier, should be sufficient to ensure that a detonation does not propagate from one unit to another. For convenience, the storage unit, which detonates, is termed the donor and nearby units, which may be endangered, are termed acceptors. The locations of the donor and acceptor define the PES and ES, respectively.

(y) *Earth-Covered Magazine (ECM).* Any earth-covered structure that meets soil cover depth and soil requirements of DoD 6055.9–STD. ECM has three possible structural strength designations (''7-Bar'', ''3-Bar'', or ''Undefined''). The strength of an ECM's headwall and door(s) determines its designation.

(z) *Energetic liquid.* A liquid, slurry, or gel, consisting of or containing an explosive, oxidizer, fuel, or combination of the above, may undergo, contribute to, or cause rapid exothermic decomposition, deflagration, or detonation.

(aa) *Engineering controls.* Regulation of facility operations through the use of prudent engineering principles, such as facility design, operation sequencing, equipment selection, and process limitations.

(bb) *Expansion chambers.* A protective construction feature in an underground storage facility which is designed to reduce the blast shock and overpressure exiting the facility by increasing the total volume of the complex. It may also function as a operating area within the underground facility, as well as a debris trap.

(cc) *Explosion.* A reaction of any chemical compound or mechanical mixture, which, when initiated, undergoes a very rapid combustion or decomposition releasing large volumes of highly heated gases that exert pressure on the surrounding medium. In addition, a mechanical reaction in which failure of the container causes the sudden release of pressure from within a pressure vessel, for example, pressure rupture of a steam boiler. Depending on the rate of energy release, an explosion can be categorized as a deflagration, a detonation, or pressure rupture.

(dd) *Explosive.* Any chemical compound or mechanical mixture that, when subjected to heat, impact, friction, detonation, or other suitable initiation, undergoes a very rapid chemical change with the evolution of large volumes of highly heated gases which exert pressures in the surrounding medium. The term applies to materials which either detonate or deflagrate.

(ee) *Explosives facility.* Any structure or location containing ammunition and explosives excluding combat aircraft parking areas or ammunition and explosives aircraft cargo areas.

(ff) *Exposed Site (ES).* A location exposed to the potential hazardous effects (blast, fragments, debris, and heat flux) from an explosion at a potential site (PES). The distance to a PES and the level of protection required for an ES determine the quantity of ammunition or explosives permitted in a PES.

(gg) *Firebrand.* A projected burning or hot fragment whose thermal energy is transferred to a receptor.

(hh) *Fire-resistive.* Combustible materials or structures that have been treated or have surface coverings designed to retard ignition of fire spread.

(ii) *Flame-resistant.* Combustible materials, such as clothing, which have been treated or coated to decrease their burning characteristics.

(jj) *Flammable.* A material which ignites easily and burns readily.

(kk) *Fragmentation.* The breaking up of the confining material of a chemical compound or mechanical mixture when an explosion takes place. Fragments may be complete items, subassemblies, pieces thereof, or pieces of equipment or buildings containing items.

(ll) *General public.* Persons not associated with the DoD installation's mission or operations such as visitors, to include guests of personnel assigned to the installation, or persons not employed or contracted by DoD or the installation.

(mm) *Hazardous fragment.* A hazardous fragment is one having an impact energy of 58 ft-lb or greater.

(nn) *Hazardous fragment density.* A density of hazardous fragments exceeding one per 600 sq ft.

(oo) *High explosive equivalent or explosive equivalent.* The amount of a standard explosive that, when detonated, will produce a blast effect comparable to that which results at the same distances from the detonation or explosion of a given amount of the material or which performance is being evaluated. It usually is expressed as a percentage of the total net weight of all reactive materials contained in the item or systems. For the purpose of these standards, TNT is used for comparison.

(pp) *Hazard analysis.* The logical, systematic examination of an item, process, condition, facility, or system to identify and analyze the probability, causes, and consequences of potential or real hazards.

(qq) *Holding yard.* A location for groups of railcars, trucks, or trailers used to hold ammunition, explosives, and dangerous materials for interim periods before storage or shipment.

(rr) *Hybrid propellants.* A propellant charge using a combination of physically separated solid and liquid (or jelled) substances as fuel and oxidizer.

(ss) *Hygroscopic.* A tendency of material to absorb moisture from its surroundings.

(tt) *Hypergolic.* A property of various combinations of chemical to self-ignite upon contact with each other without a spark or other external initiation.

(uu) *Inhabited buildings.* Buildings or structures, other than operating buildings occupied in whole or in part by human beings, both within and outside DoD

establishments. They include but are not limited to schools, churches, residences (quarters), service clubs, aircraft passenger terminals, stores, shops, factories, hospitals, theaters, mess halls, post offices, and post exchanges.

(vv) *Inspection station.* A designated location at which trucks and railcars containing ammunition and explosives are inspected.

(ww) *Installation related personnel.* Military personnel (to include family members), DoD employees, DoD contractor personnel, and other personnel having either a direct operational (military or other Federal personnel undergoing training at an installation) or logistical support (*e.g.,* vendors) relationship with installation activities.

(xx) *Interchange yard.* An area set aside for the exchange of railroad cars or vehicles between the common carrier and DoD activities.

(yy) *Intraline distance.* The distance to be maintained between any two operating buildings and sites within an operating line, of which at least one contains or is designed to contain explosives, except that the distance from a service magazine for the line to the nearest operating building may be not be less than the intraline distance required for the quantity of explosives contained in the service magazine.

(zz) *K-Factor.* The factor in the formula $D = kW^{1/3}$ used in quantity-distance determinations where D represents distance in feet and W is the net explosive weight in pounds. The K-factor is a constant and represents the degree of damage that is acceptable. Typical constants range from 1.25 to 50. the lower the factor, the greater the damage that is accepted.

(aaa) *Launch pads.* The load-bearing base, apron, or platform upon which a rocket, missile, or space vehicle and its launcher rest during launching.

(bbb) *Liquid propellants.* Substances in fluid form (including cryogenics) used for propulsion for operating power for missiles, rockets, ammunition and other related devices (See DoD 6055.9–STD. For purposes of this part, liquid fuels and oxidizers are considered propellants even when stored and handled separately.

(ccc) *Loading density.* Quantity of explosive per unit volume usually expressed as either pounds per cubic foot (lbs/ft$^3$). As applied to underground storage facilities, there are two types of loading densities used in Q–D calculations:

(1) Chamber loading density is based on the NEW within an individual storage chamber and the volume of the chamber ($V_{ch}$).

(2) The calculations of air blast peak pressures and IBD's for explosions in underground storage facilities is based on the shock-engulfed volume ($V_e$) of the facility. This is the total volume filled by the expanding gases at the time the blast front reaches the point of interest (*e.g.,* the entrance to an adjacent chamber). It includes volumes in any direction that the gases can enter, to a distance from the explosion source that equals the distance from the source to the point of interest. For IBD, the point of interest is the tunnel opening.

(ddd) *Loading docks.* Facilities, structures, or paved areas, designed and installed for transferring ammunition and explosives between any two modes of transportation.

(eee) *Lunchrooms.* Facilities where food is prepared or brought for distribution by food service personnel. It may serve more than one PES. A breakroom in an operating building may be used by personnel assigned to the PES to eat meals.

(fff) *Magazine.* Any building or structure, except an operating building, used for the storage of ammunition and explosives.

(ggg) *Mass-detonating explosives.* HE, black powder, certain propellants, certain pyrotechnics, and other similar explosives, alone or in combination, or loaded into various types of ammunition or containers, most of the entire quantity of which can be expected to explode virtually instantaneously when a small portion is subjected to fire, to severe concussion or impact, to the impulse of an initiating agent, or to the effect of a considerable discharge of energy from without. Such an explosion normally will cause severe structural damage to adjacent objects. Explosion propagation may occur immediately to other items of ammunition and explosives stored sufficiently close to and not adequately protected from the initially exploding pile with a time interval short enough so that two or more quantities must be considered as one for Q–D purposes.

(hhh) *Maximum Credible Event (MCE).* In hazards evaluation, the MCE from a hypothesized accidental explosion, fire, or agent release is the worst single event that is likely to occur from a quantity and disposition of ammunition and explosives. The event must be realistic with a reasonable probability of occurrence considering the explosion propagation, burning rate characteristics, and physical protection given to the involved. The MCE evaluated on this basis may then be used as a basis for effects calculations and casualty predictions.

(iii) *Module.* A barricaded area comprised of a series of connected cells with hard surface storage pads separated from each other by barricades.

(jjj) *Military munitions.* All ammunition products and components produced or used by for the U.S. Department of Defense or the U.S. Armed Services for national defense and security, including military munitions under the control of the Department of Defense, the U.S. Coast Guard, the U.S. Department of Energy, and the National Guard personnel. The term ''military munitions'' includes confined gaseous, liquid, and solid propellants, explosives, pyrotechnics, chemical and riot control agents, smokes, incendiaries used by the DoD Components, including bulk explosives and chemical warfare, mortar rounds, artillery ammunition, small arms ammunition, grenades, mines, torpedoes, depth charges, cluster munitions and dispensers, demolition charges, and devices and components thereof. ''Military munitions'' do not include wholly inert items, improvised explosive devices, and nuclear weapons, nuclear devices, and nuclear components thereof. However, that term does include non-nuclear components of nuclear devices, managed under the DoE's nuclear weapons program, after all required sanitizing operations under the ''Atomic Energy Act of 1954,'' as amended, have been completed (40 CFR 260.10).

(kkk) *Navigable streams.* Those parts of streams, channels, or canals capable of being used in their ordinary or maintained condition as highways of commerce over which trade and travel are or may be conducted in the customary modes, not including streams that are not capable of navigation by barges, tugboats, and other large vessels unless they are used extensively and regularly for the operation of pleasure boats.

(lll) *NEQ.* Net explosive quantity expressed in kilograms.

(mmm) *NEW.* Net explosive weight expressed in pounds.

(nnn) *Nitrogen padding (or Blanket).* Used to fill the void or ullage of a closed container with nitrogen gas to prevent oxidation of the chemical contained therein and to avoid formation of a flammable mixture, or to maintain a nitrogen atmosphere in or around an operation of a piece of equipment.

(ooo) *Non-combustible.* Not burnable.

(ppp) *Non-DoD Components.* Any entity (government, private, or corporate) that is not a part of the Department of Defense.

(qqq) *Operating building.* Any structure, except a magazine, in which operations pertaining to manufacturing, processing, handling, loading, or assembling of ammunition and explosives are performed.

(rrr) *Operating line.* A group of buildings, facilities or related work stations so arranged as to permit performance of the consecutive steps in the manufacture of an explosive, or in the loading, assembly, modification, and maintenance of ammunition. Parallel operating lines are adjacent buildings or other facilities that process the same or comparable ammunition or explosives, presenting parallel operating lines but may require physical separation or other control measures to ensure inventory control and management of explosives limits.

(sss) *Operational shield.* A barrier constructed at a particular location or around a particular machine or operating station to protect personnel, material, or equipment from the effects of a possible localized fire or explosion.

(ttt) *Parallel operating lines.* Adjacent buildings or other facilities that process the same or comparable ammunition. or explosives presenting the same or comparable hazards and using the same or comparable process methods. Such ammunition or explosives processed at related work stations in the same building or facility are not parallel operating lines but may require physical separation or other control measures to ensure inventory control and management of explosives limits.

(uuu) *Passenger railroad.* Any steam, diesel, electric, or other railroad which carries passengers for hire.

(vvv) *Potential Explosive Site (PES).* The location of a quantity of explosives that will create a blast, fragment, thermal, or debris hazard in the event of an accidental explosion of its contents. Quantity limits for ammunition and explosives at a PES are determined by the distance to an ES.

(www) *Prohibited area.* A specifically designated area at airfields, seadromes, or

heliports in which all ammunition and explosives facilities are prohibited.

(xxx) *Propellant.* Explosives compositions used for propelling projectiles and rockets and to generate gases for powering auxiliary devices.

(yyy) *Public highway.* Any street, road, or highway used by the general public for any type of vehicular travel.

(zzz) *Public traffic route.* Any public street, road, highway, navigable stream, or passenger railroad (includes roads on a military reservation that are used routinely by the general public for through traffic).

(aaaa) *Pyrotechnic material.* The explosive or chemical ingredients, including powdered metals, used in the manufacture of military pyrotechnics.

(bbbb) *Quantity-Distance (Q–D).* The quantity of explosive material and distance separation relationships that provide defined types of protection. These relationships are based on levels of risk considered acceptable for the stipulated exposures and are tabulated in the appropriate Q–D tables. Separation distances are not absolute safe distances but are relative protective or safe distances. Greater distances than those shown in the tables shall be used whenever practicable. Tables are contained in DoD 6055.9–STD and form a part.

(cccc) *Ready ammunition storage.* A location where ammunition is stored for near-term tactical or training use. Generally, ready ammunition storage will supply one or more armament pads.

(dddd) *Renovation.* The work performed on ammunition, missiles, or rockets to restore them to a completely serviceable condition. this usually involves the replacement of unserviceable or outmoded parts.

(eeee) *Risk.* The product of the probability or frequency an accident will occur within a certain time and the accident's consequences to people, property or the environment.

(ffff) *Robust munitions.* These are munitions that meet two of the following three criteria:

(1) Have a ratio of the explosive weight to empty case weight less than 1.00;

(2) Have a normal wall thickness of at least 0.4 inches; and

(3) Have a case thickness/NEW$^{1/3}$>0.05 in/lb$^{1/3}$. The following cartridges are by definition, robust: 20mm, 25mm, and 30mm. Other examples of robust ammunition include MK 80 series bombs, M107 projectiles, Tomahawk and Harpoon penetration warheads. (Changed at 319th Board Meeting).

(gggg) *Rock strength.* Strong, moderately strong, and weak rock are designators which provide a general classification of a rock body into one of these rankings is based on the rock impedance factor:

Rock impedance factor = p.c.10–6
and p = y/g

where

y is the rock density, lbs/ft$^3$

g is the gravitational acceleration, ft/sec$^2$

p is mass density of the rock, lbs-sec$^2$/ft$^4$

c seismic velocity of the rock, ft/sec.

(1) The rock impedance factor will be 0.75 or more for strong rock. Between 0.75 and 0.5 for moderately strong rock. and less than 0.5 for weak rock.

(2) Values of these parameters can usually be estimated based on examinations of exposed rock outcrops or core samples from an exploratory drill hole. For the detailed design of an underground storage facility (maximum) span width, rock reinforcement, etc.), standard rock mechanics classification systems should be used.

(hhhh) *Runway.* Any surface on land designated for aircraft takeoff and landing operations, or a designated lane of water for takeoff and landing operations of seaplanes.

(iiii) *Secure explosives holding area.* An area designated for the temporary parking of commercial carriers' motor vehicles transporting DoD-owned Arms, Ammunition, Explosives (AA&E).

(jjjj) *Secure non-explosives holding area.* An area designated for the temporary parking of commercial carriers' motor vehicles transporting Categorized DoD Arms, classified (SECRET or CONFIDENTIAL) materials, and Controlled Cryptographic Items (CCI).

(kkkk) *Service magazine.* A building of an operating line used for the intermediate storage of explosives materials.

(llll) *Single-chamber storage site.* An excavated chamber with its own access to the natural ground surface, not connected to any other storage chamber.

(mmmm) *Spall.* Pieces of a material (and the process by which they are formed) that are broken lose from the surface of a parent body by tensile forces created when a compression shock wave travels through the body and reflects from the surface. For underground storage, spall normally refers to the rock broken loose from the wall of an acceptor chamber by the shock wave transmitted through the rock from an explosion in a nearby donor chamber.

(nnnn) *Static missile battery.* Deployed ground-based missiles meant to be employed in a non-mobile mission for offensive or defensive purposes.

(oooo) *Static test stand.* Locations on which liquid propellant engines or solid propellant motors are tested in place.

(pppp) *Substantial dividing wall.* An interior wall designed to prevent simultaneous detonation of explosives on opposite sides of the wall. however, such walls may not prevent propagation (depending on quantities and types of explosives involved).

(1) Substantial dividing walls are one way of separating explosives into smaller groups to minimize the results of an explosion and allow a reduction in Q–D. These walls do not protect personnel near the wall from high explosives because the spalling of wall surface opposite the explosion source may form dangerous secondary fragments.

(2) Reinforced concrete-type walls may vary in thickness, but will be at least 12 in (305 mm) thick. At a minimum, both will be reinforced with rods at ½ in (12.7 mm) in diameter. The rods will be spaced not more than 12 in (305 mm) on centers horizontally and vertically, interlocked with footing rods and secured to prevent overturning. Rods on one face will be staggered with regard to rods on the opposite face and should be approximately 2 in (50.8 mm) from each face. Concrete should have a design compressive strength on 2,500 psi (17.24 MPa) or more. The capability to prevent simultaneous detonation is based on a limit of 425 net lb (193 kg) of mass-detonating explosives. All storage plans and Q–D calculations shall be based on the total quantity of mass-detonating explosives on both sides of a dividing wall when the quantity of either side exceeds 425 lb (193 kg). Explosives should be 3 ft (0.91 m) or more from the wall.

(3) Retaining walls filled with earth or sand must be at least 5 ft (1.5 m) wide, with earth or sand packed between concrete, masonry, or wooden retaining walls.

(qqqq) *Support facilities.* Ammunition and explosives storage or operations that support solely the functions of tactical or using units as distinguished from storage depots or manufacturing facilities.

(rrrr) *Suspect truck and car site.* A designated location for placing trucks and railcars containing ammunition and explosives that are suspected of being in a hazardous condition. These sites area also used for trucks and railcars that may be in a condition that is hazardous to their contents.

(ssss) *Taxiway or taxilane.* Any surface designated as such in the basic airfield clearance criteria specified by a DoD Component publication or Federal Aviation Regulation.

(tttt) *Toxic area.* A defined area in which CG K or Class 6 chemical agents are handled or stored.

(uuuu) *Ufer ground.* A Ufer Ground is an earth electrode system which consists of solid conductors encased along the bottom of a concrete foundation footing or floor indirect contact with the earth.

(vvvv) *Unexploded ordnance.* Explosive ordnance which has been primed, fuzed, armed or otherwise prepared for action, and which has been fired, dropped, launched, projected or placed in such. a. manner as to constitute a hazard to operations, installations, personnel or material and remains unexploded either by malfunction or design for any other cause.

(wwww) *Unit risk.* The risk to personnel and/or facilities that is associated with debris, fragment and/or blast hazards that is result of the detonation of a single round of ammunition.

(xxxx) *Waste military munitions.* Military munitions are waste when they are solid or hazardous waste under the regulations (42 U.S.C. 9601, *et seq.* implementing the Resource Conservation and Recovery Act (RCRA) subpart EE of part 264 of 40 CFR), or defined as a waste under a DoD Component's written procedures. Waste military munitions are defined in §266.202 of 40 CFR). (**Note:** Decision about whether specific munitions are or are not waste should be made with reference to §260.10 and §§266.200 through 266.206 of 40 CFR).

(1) An unused military munition is a solid waste when any of the following occurs:

(A) The munition is abandoned by being disposed of, burned, detonated (except during intended use), incinerated, or treated before disposal.

(B) The munition is removed from storage in a military magazine or other storage area for the purpose of being disposed of, burned, or incinerated, or treated prior to disposal.

(C) The munition is deteriorated or damaged (*e.g.*< the integrity of the munition is compromised by cracks, leaks, or other damage) to the point that it cannot be put into serviceable condition, and cannot reasonably be recycled or used for other purposes. or,

(D) An authorized military official has declared the munition a solid waste. (Note: Declaration by and ''authorized military official'' that munitions are waste (Section 266.202(b)(4) of 40 CFR) has a very limited meaning and applicability. The only example is a declaration by the Army in 1984 that M55 rockets are waste. The environmental Protection Agency expects that such a declaration would be in writing. A decision that munitions are unserviceable, or that they are to be transferred into a demilitarization account does not, by itself, constitute a decision that the munitions are solid waste).

(2) A used or fired military munition is a solid waste, it follows:

(A) When transported off range or from the site of use, where the site of use is not a range, for the purposes of storage, reclamation, treatment, disposal, or treatment before disposal. or,

(B) If recovered, collected, and then disposed of by burial, or land filling either on or off a range.

(C) For the RCRA (section 1004(27) of 40 CFR), a used or fired military munition is a solid waste, and therefore, is potentially subject to RCRA corrective action authorities under Section 3004(u) and 3004(v), and 3008(h) of 40 CFR, the munition lands off-range and is not promptly rendered safe and/or retrieved. Any imminent and substantial threats associated with any remaining material must be addressed. If remedial action is not possible, the operator of the range must maintain a record of the event for as long as any threat remains. The record must include the type of munition and its location (to the extent the location is known). (For further clarification see 40 CFR 266.202 under ''Definition of Solid Waste.'').

(yyyy) *Waiver.* A written authority that provides a temporary exception, permitting deviation from mandatory requirements of this Part. It generally is granted for short periods of time pending cancellation as a result of termination of scheduled work commitment or correction of the waived conditions.

(zzzz) *Wharf.* A landing place or platform built into the water or along the shore for the berthing of vessels.

(aaaaa) *Wharf yard.* A yard that is close to piers or wharves in which railcars or trucks are held for short periods of time before delivery to the piers or wharves.

Dated: March 15, 2005.

**Jeannette Owings-Ballard,**

*OSD Federal Register Liaison Officer, Department of Defense.*

[FR Doc. 05–5429 Filed 3–28–05; 8:45 am]

BILLING CODE 5001–06–P

Federal Register

Tuesday,
March 29, 2005

# Part IV

# Department of Housing and Urban Development

## 24 CFR Part 203

## Eligibility of Adjustable Rate Mortgages; Interim Final Rule

## DEPARTMENT OF HOUSING AND URBAN DEVELOPMENT

### 24 CFR Part 203

**[Docket No. FR–4946–I–01; HUD 2005–0004]**

**RIN 2502–AI26**

## Eligibility of Adjustable Rate Mortgages

**AGENCY:** Office of the Assistant Secretary of Housing—Federal Housing Commissioner, HUD.

**ACTION:** Interim rule.

**SUMMARY:** This rule makes available a new adjustable rate mortgage (ARM) product. In accordance with statutory authority, this rule enables the Secretary to insure five-year hybrid ARMs with interest rates adjustable up to two percentage points annually (this type of mortgage is known as a 5/1 ARM). The lifetime cap on annual interest rate adjustments for five-year ARMs is set at six percentage points.

**DATES:** *Effective Date:* April 28, 2005.

*Comment Due Date:* May 31, 2005.

**ADDRESSES:** Interested persons are invited to submit comments regarding this rule to the Regulations Division, Office of General Counsel, Room 10276, Department of Housing and Urban Development, 451 Seventh Street, SW., Washington, DC 20410–0500. Electronic comments may be submitted through either:

- The Federal eRulemaking Portal at *http://www.regulations.gov*; or
- The HUD electronic Web site at *http://www.epa.gov/feddocket.* Follow the link entitled ''View Open HUD Dockets.'' Commenters should follow the instructions provided on that site to submit comments electronically.

Facsimile (FAX) comments are not acceptable. In all cases, communications must refer to the docket number and title. All comments and communications submitted will be available for public inspection and copying between 8 a.m. and 5 p.m. weekdays at the above address. Copies are also available for inspection and downloading at *http://www.epa.gov/feddocket.*

**FOR FURTHER INFORMATION CONTACT:** Vance T. Morris, Director, Office of Single Family Program Development, Office of Insured Single Family Housing, Room 9266, Department of Housing and Urban Development, 451 Seventh Street, SW., Washington, DC 20410–8000; telephone (202) 708–2121 (this is not a toll-free number). Persons with hearing or speech impairments may access this number through TTY by calling the toll-free Federal Information Relay Service at (800) 877–8339.

**SUPPLEMENTARY INFORMATION:**

### I. Background

Section 251 of the National Housing Act (12 U.S.C. 1715z–16) authorizes the Secretary to insure adjustable rate mortgages (ARMs). ARMs are mortgages that remain at a fixed interest rate for a certain period of time, but then provide for periodic adjustments in the interest rate charged on the mortgage. An ARM may be attractive to a potential homebuyer because it offers a lower initial interest rate than most fixed rate mortgage loans.

Section 251 of the National Housing Act limits the amount of the annual interest rate adjustments on ARMs insured by HUD—Federal Housing Administration (FHA) depending on the duration of the initial fixed interest rate term. Section 301 of Public Law 108–186 (approved December 16, 2003) (2003 Act), amended section 251(d) of the National Housing Act to provide for greater flexibility in this regard. Prior to enactment of the 2003 Act, section 251 of the National Housing Act limited annual interest rate adjustments on FHA-insured ARMs to one percentage point only if the initial fixed interest rate term was for a period of five years or less. Section 301 amended section 251(d)(1)(C) of the National Housing Act to reduce this period to three years or less. In other words, the annual adjustment of one percent only applies to ARMs with a fixed term for the first three or fewer years. For five-, seven- and ten-year ARMs, the mortgagee may make an annual adjustment that exceeds one percent.

HUD's regulations implementing section 251 of the National Housing Act are located at 24 CFR 203.49 (entitled ''Eligibility for adjustable rate mortgages''). Under § 203.49, the types of ARMs that are insurable are those for which the interest rate may be adjusted annually by the mortgagee beginning after one, three, five, seven, or ten years from the date of the mortgagor's first debt service payment. The provisions of § 203.49 governing the amount of annual interest rate adjustments are consistent with section 251 of the National Housing Act prior to the amendments made by the 2003 Act. In the case of one-, three-, and five-year ARMs, § 203.49(f)(1) authorizes the mortgagee to annually adjust the interest rate by no more than one percentage point. For seven- and ten-year ARMs, the mortgagee may annually adjust the interest rate by two percentage points (see § 203.49(f)(2)). Adjustments in the effective rate of interest over the entire term of the mortgage may not result in a change in either direction of more than five percentage points (for one-, three-, and five-year ARMs) and six percentage points (for seven- and ten-year ARMs) from the initial contract interest rate (see § 203.49(f)(1) and (2)).

### II. This Interim Rule

This interim rule revises 24 CFR 203.49 to implement the flexibility provided under section 301 of the 2003 Act for FHA-insured five-year ARMs. As noted above, section 301 permits annual interest adjustments of greater than one percent on ARMs with an initial fixed interest rate period of at least five years. In the case of seven- and ten-year ARMs, the current regulations already reflect this flexibility by authorizing annual interest rate adjustments of two percentage points. However, § 203.49(f)(1) limits the annual interest rate adjustment for five-year ARMs to a single percentage point. Consistent with section 301 of the 2003 Act, this interim rule provides for annual interest rate adjustments of two percentage points for five-year ARMs.

HUD has become aware of concerns among mortgage lenders and borrowers regarding the current one percentage point limitation on annual interest rate adjustments for five-year ARMs. For example, three of the four public commenters on HUD's March 11, 2003, (68 FR 11730) proposed rule implementing seven- and ten-year ARMs expressed support for enactment of section 301 of the 2003 Act, which at the time was pending approval by Congress, and urged HUD to remove the one percentage point cap on adjustments for five-year ARMs as soon as feasible.

These concerns are based primarily on the fact that the one percentage point limitation on FHA-insured five-year ARMs does not accurately reflect the realities of the mortgage market. Conventional mortgage lenders do not offer five-year ARMs with a one percentage point cap on annual interest rate adjustments. A maximum annual increase of one percentage point does not provide lenders with sufficient interest rate flexibility to offer five-year ARMs at an interest rate below the traditional 30-year fixed rate mortgage. This inability reduces the attractiveness of FHA-insured five-year ARMs to both borrowers and lenders since, as noted above in this preamble, the appeal of ARMs is based on their lower initial interest rate. Accordingly, the one percentage point limitation undercuts HUD's ability to offer mortgage insurance for a full range of ARM loans with standing initial interest rates lower

than those on conventional 30-year fixed rate mortgages.

This interim rule addresses these concerns by providing for annual interest rate adjustments of two percentage points for five-year ARMs. This is consistent with the annual rate adjustment authorized under the current regulations for seven- and ten-year ARMs. The additional flexibility provided by this interim rule will make FHA-insured five-year ARMs more attractive to homebuyers and more closely adhere to the conditions of the mortgage lending market.

In addition, the interim rule raises the lifetime cap on interest rate adjustments for five-year ARMs to six percentage points. As noted above, five-year ARMs are currently limited to a maximum lifetime-interest rate adjustment of five percentage points. This change will conform the lifetime cap for five-year ARMs to those applicable to seven- and ten-year ARMs.

## III. Justification for Interim Rulemaking

HUD generally publishes a rule for public comment before issuing a rule for effect, in accordance with its own regulations on rulemaking in 24 CFR part 10. However, part 10 provides for exceptions to the general rule if the agency finds good cause to omit advanced notice and public participation. The good cause requirement is satisfied when prior public procedure is ''impractical, unnecessary, or contrary to the public interest'' (see 24 CFR 10.1). HUD finds that good cause exists to publish this rule for effect without first soliciting public comment in that prior public comment is contrary to the public interest. The reasons for HUD's determination are as follows.

This interim rule does not impose any new regulatory burdens, but rather benefits lenders and potential homebuyers by expanding the number of available insured mortgage options. Specifically, the interim rule updates the requirements for FHA-insured five-year ARMs to more accurately reflect market conditions and conform to the statutory language of the 2003 Act. Further, as noted above in this preamble, the changes made by this interim rule address concerns raised to HUD by the public, including the majority of the public commenters on HUD's March 11, 2003, proposed rule on ARMs. The current one percentage point cap on annual interest rate adjustments prevents lenders from offering FHA-insured five-year ARMs at interest rates below those offered on conventional fixed rate 30-year mortgages. This undercuts the appeal of FHA-insured five-years ARMs, and denies HUD's ability to offer mortgage insurance for a full range of ARM loans. The additional flexibility provided by this interim rule will allow lenders to offer these five-year ARMs thus providing potential homeowners with more options for insured mortgage products. Delaying the effectiveness of this interim rule to solicit prior public comment would unnecessarily perpetuate the inability of lenders to offer a competitive and viable FHA mortgage insurance product to potential homebuyers. Accordingly, HUD has determined that it would be contrary to the public interest to delay the effectiveness of this amendment to solicit prior public comment.

Although HUD has determined that good cause exists to publish this rule for effect without prior public comment, HUD recognizes the value of public comment in the development of its regulations. HUD, therefore, is issuing these regulations on an interim basis and is providing the public with a 60-day comment period. HUD welcomes comments on the regulatory amendments made by this interim rule. The public comments will be addressed in the final rule.

## IV. Findings and Certifications

### *Regulatory Flexibility Act*

The Regulatory Flexibility Act (RFA) (5 U.S.C. 601 *et seq.*), generally requires an agency to conduct a regulatory flexibility analysis on any rule subject to notice and comment rulemaking requirements unless the agency certifies that the rule will not have a significant economic impact on a substantial number of small entities. This rule permits greater flexibility for all lenders, regardless of size, to offer a revised mortgage product that is eligible for FHA insurance. This rule imposes no additional economic or monetary requirements on businesses. Therefore, the undersigned certifies that this interim rule will not have a significant economic impact on a substantial number of small entities. Notwithstanding HUD's determination that this rule will not have a significant economic effect on a substantial number of small entities, HUD specifically invites comments regarding any less burdensome alternatives to this rule that will meet HUD's objectives as described in this preamble.

### *Environmental Impact*

A Finding of No Significant Impact with respect to the environment has been made in accordance with HUD regulations at 24 CFR part 50, which implements Section 102(2)(C) of the National Environmental Policy Act of 1969 (42 U.S.C. 4332(2)(C)). This finding is available for public inspection between 8 a.m. and 5 p.m. weekdays in the Regulations Division, Room 10276, Office of General Counsel, Department of Housing and Urban Development, 451 Seventh Street, SW., Washington, DC 10240–0500.

### *Executive Order 13132, Federalism*

Executive Order 13132 (entitled ''Federalism'') prohibits, to the extent practicable and permitted by law, an agency from publishing any rule that has federalism implications and either imposes substantial direct compliance costs on state and local governments and is not required by statute, or the rule preempts state law, unless the agency meets the consultation and funding requirements of section 6 of the Executive Order. This rule does not have federalism implications and does not impose substantial direct compliance costs on state and local governments or preempt state law within the meaning of the Executive Order.

### *Unfunded Mandates Reform Act*

Title II of the Unfunded Mandates Reform Act of 1995 (UMRA) (2 U.S.C. 1531–1538) establishes requirements for federal agencies to assess the effects of their regulatory actions on state, local, and tribal governments and the private sector. This final rule does not impose any federal mandates on any state, local, or tribal government or the private sector within the meaning of UMRA.

### *Executive Order 12866, Regulatory Planning and Review*

The Office of Management and Budget (OMB) reviewed this rule under Executive Order 12866 (entitled ''Regulatory Planning and Review''). OMB determined that this rule is a ''significant regulatory action'' as defined in section 3(f) of the Executive Order (although not economically significant, as provided in section 3(f)(1) of the Executive Order). Any changes made to the rule subsequent to its submission to OMB are identified in the docket file, which is available for public inspection between 8 a.m. and 5 p.m. weekdays in the Regulations Division, Room 10276, Office of General Counsel, Department of Housing and Urban Development, 451 Seventh Street, SW., Washington, DC 20410–0500.

*Catalog of Federal Domestic Assistance*

The Catalog of Federal Domestic Assistance numbers applicable to this rule are 14.108, 14.117, and 14.119.

**List of Subjects in 24 CFR Part 203**

Hawaiian Natives, Home improvement, Indians—lands, Loan programs—housing and community development, Mortgage insurance, Reporting and recordkeeping requirements, Solar energy.

■ For the reasons stated in the preamble, HUD amends 24 CFR part 203 as follows:

## PART 203—SINGLE FAMILY MORTGAGE INSURANCE

■ 1. The authority citation for 24 CFR part 203 continues to read as follows:

**Authority:** 12 U.S.C. 1709, 1710, 1715b, 1715z–16, and 1715u; 42 U.S.C. 3535(d).

■ 2. Revise § 203.49 (f)(1) and (2) to read as follows:

### § 203.49 Eligibility of adjustable rate mortgages.

* * * * *

(1) For one- and three-year adjustable rate mortgages, no single adjustment to the interest rate shall result in a change in either direction of more than one percentage point from the interest rate in effect for the period immediately preceding that adjustment. Index changes in excess of one percentage point may not be carried over for inclusion in an adjustment for a subsequent year. Adjustments in the effective rate of interest over the entire term of the mortgage may not result in a change in either direction of more than five percentage points from the initial contract interest rate.

(2) For five-, seven-, and ten-year adjustable rate mortgages, no single adjustment to the interest rate shall result in a change in either direction of more than two percentage points from the interest rate in effect for the period immediately preceding that adjustment. Index changes in excess of two percentage points may not be carried over for inclusion in an adjustment in a subsequent year. Adjustments in the effective rate of interest over the entire term of the mortgage may not result in a change in either direction of more than six percentage points from the initial contract rate.

* * * * *

Dated: March 3, 2005.

**John C. Weicher,**

*Assistant Secretary for Housing—Federal Housing Commissioner.*

[FR Doc. 05–6061 Filed 3–28–05; 8:45 am]

BILLING CODE 4210–27–P

Federal Register

Tuesday,
March 29, 2005

# Part V

# Department of Transportation

## Federal Aviation Administration

## 14 CFR Part 93

## Noise Limitations for Aircraft Operations in the Vicinity of Grand Canyon National Park; Rule

**DEPARTMENT OF TRANSPORTATION**

**Federal Aviation Administration**

**14 CFR Part 93**

**[Docket No. FAA–2003–14715; Amendment No. 93–83]**

**RIN 2120–AG34**

## Noise Limitations for Aircraft Operations in the Vicinity of Grand Canyon National Park

**AGENCY:** Federal Aviation Administration (FAA), Department of Transportation (DOT).

**ACTION:** Final rule.

**SUMMARY:** This action classifies aircraft used in commercial sightseeing flight operations over Grand Canyon National Park (GCNP) by the noise they produce. This amendment of 14 CFR part 93 is necessary to establish reasonably achievable requirements for aircraft operating in the GCNP to be considered as employing quiet aircraft technology. The FAA now refers to the designation as ''GCNP quiet aircraft technology'' rather than ''quiet technology'' to clarify that the scope of this rule is limited to aircraft operating in the GCNP. The FAA and NPS will use the GCNP quiet aircraft technology designation to consider establishing routes and corridors and in future actions to achieve substantial restoration of natural quiet and visitor experience in the GNCP. This rule does not require any action by commercial air tour operators, as it simply identifies which aircraft meet or do not meet the GCNP quiet aircraft technology designation. Further, this rule does not relieve GCNP commercial air tour operators of their operational limitations. Section 804(b) of the National Parks Air Tour Management Act directs the FAA, in consultation with the NPS and the Advisory Group (now known as the National Park Overflights Advisory Group Aviation Rulemaking Committee or NPOAG ARC) to consider establishing the GCNP quiet aircraft technology aircraft routes and corridors consistent with certain requirements.

**EFFECTIVE DATE:** March 29, 2005.

**FOR FURTHER INFORMATION CONTACT:** Thomas L. Connor; (AEE–100); Office of Environment and Energy; Federal Aviation Administration, 800 Independence Ave., SW., Washington, DC 20591, (202) 267–8933.

**SUPPLEMENTARY INFORMATION:**

### Availability of Rulemaking Documents

You can get an electronic copy using the Internet by:

(1) Searching the Department of Transportation's electronic Docket Management System (DMS) Web page (*http://dms.dot.gov/search*);

(2) Visiting the Office of Rulemaking Web page at *http://www.faa.gov/avr/arm/index.cfm;* or

(3) Accessing the Government Printing Office's Web page at *http://www.gpoaccess.gov/fr/index.html.*

You can also get a copy by submitting a request to the Federal Aviation Administration, Office of Rulemaking, ARM–1, 800 Independence Ave., SW., Washington, DC 20591, or by calling (202) 267–9680. Make sure to identify the amendment number or docket number of this rulemaking.

Anyone is able to search the electronic form of all comments received into any of our dockets by the name of the individual submitting the comment (or signing the comment, if submitted on behalf of an association, business, labor union, etc.). You may review DOT's complete Privacy Act statement in the **Federal Register** published on April 11, 2000 (Volume 65, Number 70; Pages 19477–78) or you may visit *http://dms.dot.gov.*

### Small Business Regulatory Enforcement Fairness Act

The Small Business Regulatory Enforcement Fairness Act (SBREFA) of 1996 requires the FAA to comply with small entity requests for information or advice about compliance with statutes and regulations within its jurisdiction. If you are a small entity and have a question regarding this document, you may contact your local FAA official, or the person listed under **FOR FURTHER INFORMATION CONTACT**. You can find out more about SBREFA on the Internet at *http://www.faa.gov/avr/arm/sbrefa.cfm.*

### Background

*Regulatory History*

On December 31, 1996, the FAA published a notice of proposed rulemaking (NPRM) on Noise Limitations for Aircraft Operations in the Vicinity of Grand Canyon National Park (61 FR 69334; Notice 96–15), and a Notice of Availability of Proposed Commercial Air Tour Routes in the **Federal Register** (61 FR 69356). The FAA proposed to establish noise limitations for certain aircraft operating in the vicinity of GCNP. The proposed aircraft noise limitations rule generally would have categorized air tour aircraft according to each aircraft's noise efficiency and mandated a conversion date to aircraft meeting the GCNP quiet aircraft technology designation. Additionally, the FAA proposed an incentive flight corridor through Grand Canyon for quiet technology/noise efficient aircraft. The NPRM sought to reduce the impact of air tour aircraft noise on GCNP and to make progress in achieving substantial restoration of natural quiet in GCNP. The FAA received many comments in opposition to this NPRM, primarily because of the impact of the mandatory conversion date. After the comment period closed on the 1996 NPRM, the FAA and NPS began reconsidering GCNP quiet aircraft technology requirements and reaching consensus upon other steps that should be initiated to achieve the statutorily mandated goal of substantial restoration of natural quiet and to improve visitor experience in the GCNP. The FAA and NPS agreed to proceed with rulemakings to limit the number of commercial air tours in the GCNP and to modify the airspace and route system in the area. The agencies realized that the achievement of substantial restoration of natural quiet requires a multi-phased regulatory plan to control noise. Implementation of GCNP quiet aircraft technology alone would not suffice.

The agencies concentrated their efforts upon resolving issues presented in comments on the 1996 NPRM and finalizing the GCNP quiet aircraft technology rulemaking, once the FAA issued the airspace and operations limitation final rules in April 2000.

On April 5, 2000, the Wendell H. Ford Aviation Investment and Reform Act for the 21st Century was signed into law as Public Law 106–181. Among other provisions the law enacted the National Parks Air Tour Management Act of 2000 (the Air Tour Act). Section 804(a) of the Air Tour Act directed the FAA Administrator to designate reasonably achievable quiet technology requirements for fixed-wing airplanes and helicopters for purposes of commercial air tour operations over the GCNP. If the FAA determined that it would not be able to make the designation within twelve months of the enactment of the Air Tour Act, then the FAA was required to transmit a report to Congress stating the reasons the FAA would not be able to make such a designation within that period and the expected date of such designation.

Section 804(b) of the Air Tour Act also directed the FAA Administrator, in consultation with the NPS Director and the NPOAG ARC, to establish GCNP quiet aircraft technology routes or corridors for commercial air tour operations at GCNP, provided that such routes or corridors will not negatively impact tribal lands, safety, or the substantial restoration of natural quiet.

Recommendations and requirements for use of GCNP quiet aircraft technology in air tour management plans for national parks other than the GCNP pursuant to other provisions of the Air Tour Act will be subject to separate rulemaking and are not addressed by this final rule for GCNP. For example, Section 805 of the Air Tour Act requires the NPOAG ARC to provide advice, information, and recommendations to the FAA and NPS on commonly accepted quiet aircraft technology for use in commercial air tour operations over a national park or tribal lands, which will receive preferential treatment in air tour management plans. While the NPOAG ARC may consider this final rule in making recommendations on commonly accepted quiet aircraft technology for use at other national parks, pursuant to Section 805 of the Air Tour Act, this final rule is limited to fulfilling the requirements under Section 804 of the Air Tour Act for the GCNP.

In October 2001, the FAA submitted a report to Congress on Quiet Aircraft Technology for the Grand Canyon, as required under Section 804 of the Air Tour Act. The report indicated that, while substantive progress had been made on the GCNP quiet aircraft technology rulemaking, the FAA would not be able to make a designation within the 12 months of enactment of the Air Tour Act because of the need to resolve some key technical issues. These issues included the then-ongoing GCNP Noise Model Validation project, a study regarding the correlation between aircraft certification noise levels and aircraft audibility, and how changes to the GCNP SFRA affected substantial restoration of natural quiet. The report also stated that the FAA planned to issue a supplemental notice of proposed rulemaking (SNPRM) in early 2002. The FAA and the NPS required more time than expected to resolve the technical issues, which delayed the publication of the SNPRM for another year.

On March 24, 2003, the FAA published the SNPRM Notice No. 03–05 entitled ''Noise Limitations for Aircraft Operations in the Vicinity of Grand Canyon National Park'' (68 FR 14276). The FAA solicited comments on the proposal, which are discussed in the following section. This final rule is based on the SNPRM Notice No. 03–05.

**Discussion of Comments**

Seventeen commenters responded to the supplemental Notice No. 03–05 regarding the proposed designation for quiet technology aircraft operating in the GCNP (hereinafter GCNP quiet aircraft technology designation). While one commenter believes that the FAA should scrap the whole project, the other commenters offered a range of opinions and recommendations on the proposal. These comments and the FAA responses are discussed below. The docket also contains 111 comments that had been submitted to the original 1996 NPRM Notice No. 96–15. The FAA responded to these comments on the 1996 NPRM in the 2003 SNPRM.

*Noise Efficiency*

Lighter than Air Solar International, LLC and an anonymous commenter recommended that the GCNP quiet aircraft technology designation should be based upon an absolute noise limit rather than a noise value as a function of the number of passenger seats. Operators should not be given an ''efficiency bonus'' for aircraft that are capable of carrying more passengers.

*FAA Response*

The FAA finds that the noise efficiency concept (larger aircraft with more passenger seats are allowed to generate more noise per aircraft, but less noise per passenger) exhibits all of the desired attributes for the designation of reasonably achievable requirements for aircraft to be considered as employing GCNP quiet aircraft technology for purposes of Section 804(a) of the Air Tour Act. The concept is technically sound, as it takes into account aircraft design, flight configuration, acoustic characteristics, productivity, and economic reasonableness. The FAA believes that this GCNP quiet aircraft technology standard, used in conjunction with other future actions, will contribute towards substantial restoration of natural quiet at GCNP.

*Helicopter Noise Annoyance*

The Sierra Club contends that helicopter noise is more annoying than noise from fixed-wing aircraft and recommends that such noise effects be considered.

*FAA Response*

Given that the objective is not to have audible aircraft noise in large areas of the GCNP, the FAA finds the GCNP quiet aircraft technology designation appropriately reflects the audibility of commercial sightseeing operations using the different aircraft types. For example, low frequency pressure pulses created by the spinning motion of the rotor blades characterize helicopter noise. Audibility is the ability of the human observer to detect an acoustic signal in the presence of noise. For the GCNP setting, audibility is quantified by the summation of the signal-to-noise ratios over the entire bandwidth representing the range of human hearing. Thus, the method used to measure advancement towards the goal of substantial restoration of natural quiet is already very sensitive to the distinctive acoustic characteristics of different aircraft types.

*Airships*

Lighter than Air Solar International, LLC recommends that the definition for ''quiet technology aircraft'' be expanded to include airships. An airship is defined in 14 CFR part 1 is ''an engine-driven lighter than air aircraft that can be steered.'' This commenter asks the FAA to afford airship operators the same opportunities as heavier-than-air operators by enacting a more flexible and inclusive definition of GCNP quiet aircraft technology.

*FAA Response*

The FAA sees no need to expand the definition, since it now simply refers to ''aircraft subject to § 93.301'', which includes airships. Introducing airships for commercial air tour operations would raise issues related to both noise characterization and operational compatibility.

While there are presently no airship tour operations being conducted over the Grand Canyon, the FAA does not intend to prohibit this category of aircraft from due consideration, provided such operations could be accommodated safely within the SFRA. As a matter of policy, the FAA encourages industry to pursue research and development of newer, innovative technology applications where possible. With regard to this proposal, the FAA acknowledges that the application of certain airship technologies might conceivably contribute toward the goal of restoring natural quiet in the Grand Canyon. Although special operational protocols would have to be developed to integrate airship operations in the GCNP SFRA, it is feasible that such operations could be safely accommodated in much the same manner as in other high-density environments.

The FAA does not have noise certification requirements for airships. Thus, FAA-approved noise data for these aircraft types do not exist. The FAA has provided for this contingency both in the rule and in an Advisory Circular (AC) that will accompany the promulgation of this rule. The draft FAA AC–GCNP–1, ''Noise Levels for Aircraft used for Commercial Operations in Grand Canyon National Park Special Flight Rules Areas,'' states that where noise certification under 14 CFR part 36 was not required due to applicability, the noise level could be provided to the FAA by the operator or

owner and considered to be an estimated noise certification level, as long as the FAA can sufficiently substantiate that the noise level is representative of the subject aircraft.

The scope of this rule does not include issues associated with any potential change to commercial sightseeing flight protocols in the SFRA with the introduction of airships. The FAA would thoroughly investigate those operational issues if and when it receives an application for operational specifications for an airship.

*Relationship Between Audibility and Certificated Noise Levels*

The NPS recommends that the FAA perform an analysis to ensure that aircraft that the FAA has classified as GCNP quiet aircraft technology based upon certificated noise levels are less audible than aircraft not so classified. The NPS included with its comment a technical memorandum, ''Relationship Between Audibility of Tour Aircraft and Certification Data,'' prepared by the aviation environmental consulting firm, Harris Miller Miller & Hanson, Inc. (HMM&H).

*FAA Response*

To address the NPS concern, the FAA performed a comprehensive assessment of the subject relationship utilizing the capabilities of the FAA's Integrated Noise Model (INM) Version 6.2. The FAA finds that the designation of reasonably achievable GCNP quiet aircraft technology correlates sufficiently with audibility to assist the FAA and NPS in fulfilling the National Park Overflights Act (Pub. L. 100–91).

INM 6.2 is the latest advancement in the FAA standard tool for the calculation of aircraft noise. The shortcomings of the previous INM version in predicting audibility became the impetus behind its development. These shortcomings were discovered in the joint FAA and NPS GCNP noise model validation study (''Aircraft Noise Validation Study,'' HMM&H Report No. 295860.29, January 2003). The validation study was described in the SNPRM Notice No. 03–05, and an electronic copy is available through the NPS Web page at *http://www.nps.gov/grca/overflights/documents/anmvs/index.htm*. The model improvements include: (1) More aircraft types that are used in commercial sightseeing operations; (2) spectral-based method for signal detection prediction; and (3) a high-resolution terrain database to better address the effect of terrain features on sound propagation. All of these improvements are intended to improve the accuracy of the audibility calculations.

Audibility is defined as the ability for an attentive listener to hear aircraft noise. Detectability is based on signal detection theory, and depends on both the actual aircraft sound level (''signal'') and the ambient sound level (background or ''noise''). As such, audibility is based on many factors, including the listening environment one is in. Conversely, detectability is a theoretical formulation based on a significant body of research. For the purposes of INM modeling the terms ''audibility'' and ''detectability'' are used interchangeably. The detectability level (d') calculated in INM 6.2 is based on the signal-to-noise ratio within one-third octave-band spectra for both the signal and noise, using a 10log(d') value of 7 dB. There are three parts to the calculation of audibility in INM 6.2: (1) Calculate the detectability level for each one-third octave band of the signal for a single contributing flight path segment; (2) Calculate the detectability level for the overall signal for a single contributing flight path segment; and (3) Calculate absolute or percentage of time a signal is audible for a flight path.

In addition to using the improved INM 6.2, this assessment used the aircraft operations from the aforementioned GCNP aircraft noise model validation study. Time audible predictions were generated for all aircraft types measured during the validation study, using operations and one-third octave band spectral data consistent with the validation study. The aircraft taken from the original validation study include the Aerospatiale AS350, Bell B206B and Bell B206L helicopters, as well as the Cessna C182, Cessna C207, and Vistaliner (DHC–6QP) propeller-driven aircraft. For the purposes of this assessment, operational and acoustic data were added for some GCNP quiet aircraft technology designation helicopters not operating at the time of the model validation study. These include the MD600, MD900 and Eurocopter EC–130. Predictions were summarized for all validation study measurement sites and relationships between predicted time audible and noise certification levels derived.

Just as was done by the consultant (HMM&H) for the preparation of the NPS comment to the SNPRM Notice No. 03–05, the FAA evaluated the ranking of aircraft audibility duration per available passenger seat against the ranking of the noise certification level in A-weighted decibels per available passenger seat. The FAA performed this evaluation at the 39 measurement sites in the GCNP noise model validation study (labeled as '1A', '2A', * * * to '9F' in the study). Similar to what the NPS's consultant had done, the FAA generated figures that compare the aircraft's margin of compliance with the GCNP quiet aircraft technology designation to the length of time the aircraft is audible, adjusting for the number of available passenger seats.

The margin of compliance is the difference in decibels between the aircraft's certificated noise level and the GCNP quiet aircraft technology designation noise limit, using the appropriate equation in the proposed rule. A negative margin of compliance means that the certificated noise level is below the noise limit designating that aircraft as GCNP quiet aircraft technology. In this evaluation, the Vistaliner, EC–130, MD600 and MD900 all have negative margins of compliance (GCNP quiet aircraft technology designation); while the C182, C207, AS350, B206B, and B206L all have positive margins of compliance (not GCNP quiet aircraft technology designation).

Figure 1 compares the margins of compliance to the average length of time audible for the sample of aircraft at validation measurement Site 7. While Site 7 has been singled out for display, the findings are comparable to the other validation measurement sites. Site 7 included 6 microphone locations along Tanner Trail in the GCNP. The average audibility duration value at the 6 microphone locations is plotted for each of the aircraft types. The helicopters and fixed wing aircraft that meet the GCNP quiet aircraft technology designation are less audible than those aircraft that do not meet the designation.

**Figure 1.** Comparison of GCNP Quiet Aircraft Technology Designation with Audibility

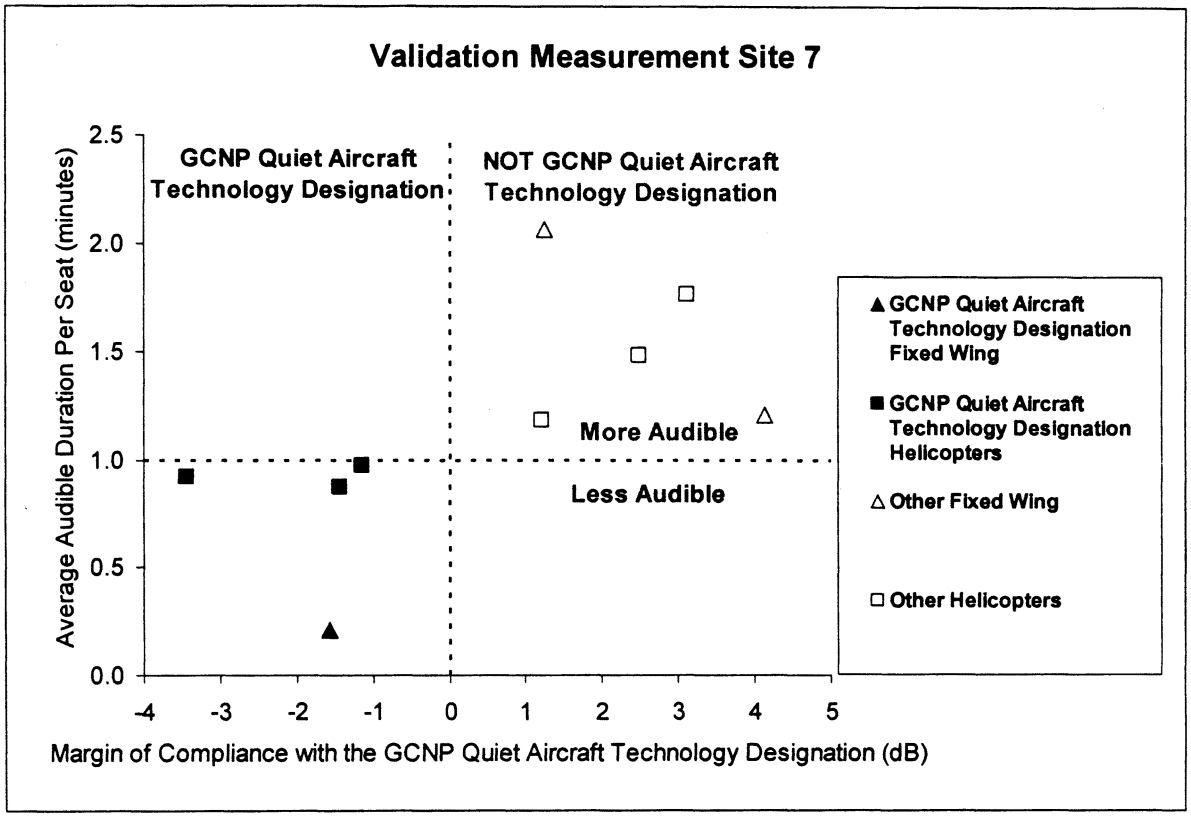


The FAA analysis found that the GCNP quiet aircraft technology designation aircraft are less audible at all of the other model validation measurements sites. Table 1 summarizes the findings. The column on the far left of Table 1 contains the identity of the site groups used in the model validation study. That study grouped the 39 microphone locations according to common geographic characteristics that could lead to common levels of aircraft noise exposure. The remaining columns group the average time audible values by aircraft category (fixed wing or helicopter) and by compliance with the GCNP quiet aircraft technology designation. A range of average audible duration values is given when there is more than one aircraft model in that specific category. For example, this analysis includes 2 fixed wing aircraft that would not meet the GCNP quiet aircraft technology designation (C182 and C207), 3 helicopters that would not meet the designation (AS350, B206B, and B206L), 3 GCNP quiet aircraft technology designation helicopters (EC130, MD600, and MD900), and one GCNP quiet aircraft technology designation fixed wing aircraft (Vistaliner or DHC6QP).

TABLE 1.—COMPARISON OF AVERAGE TIME AUDIBLE PER SEAT (MINUTES, MINIMUM–MAXIMUM)

| Site group | Fixed wing | | Helicopters | |
|---|---|---|---|---|
| | GCNP quiet aircraft technology designation | Other | GCNP quiet aircraft technology designation | Other |
| 1All | No aircraft audible | | | |
| 2All | No aircraft audible | | | |
| 3North | 0.0 | 0.5–0.8 | 0.0–0.0 | 0.0–0.1 |
| 3South | 0.0 | 0.3–0.5 | 0.0–0.1 | 0.0–0.2 |
| 4North | 0.1 | 0.7–1.4 | 0.5–0.6 | 0.6–1.0 |
| 4South | 0.0 | 0.6–1.1 | 0.3–0.4 | 0.4–1.1 |
| 5Rim | 0.3 | 1.9–3.6 | 1.1–1.4 | 1.4–2.6 |
| 5Interior | 0.1 | 1.0–2.0 | 0.2–0.5 | 0.2–1.4 |
| 6All | 0.2 | 1.2–2.2 | 0.9–1.0 | 1.2–1.6 |
| 7All | 0.2 | 1.2–2.1 | 0.9–1.0 | 1.2–1.8 |
| 8Mtn | 0.1 | 1.3–2.3 | 0.8–0.9 | 0.9–1.7 |
| 8Ridge | 0.2 | 0.9–1.6 | 0.6–0.6 | 0.8–1.3 |

TABLE 1.—COMPARISON OF AVERAGE TIME AUDIBLE PER SEAT (MINUTES, MINIMUM–MAXIMUM)—Continued

| Site group | Fixed wing | | Helicopters | |
|---|---|---|---|---|
| | GCNP quiet aircraft technology designation | Other | GCNP quiet aircraft technology designation | Other |
| 9Far | No aircraft audible | | | |
| 9Near | 0.3 | 1.8–3.2 | 1.0–1.2 | 1.4–2.2 |

The NPS's consultant also expressed concern that the A-weighting used for the certification and the GCNP quiet aircraft technology designation may not correlate with time audible. The FAA examination indicates there is some validity to this concern. In particular, the Cessna 182 aircraft (C182), which has a relatively low certification level but a high audible duration, seems to be an exception to the relationships derived between time audible and certification level. This is especially the case when considering the time audible on a per seat basis. A possible reason for this is that the C182 has a lower Blade Passage Frequency (BPF) than the other fixed wing aircraft. The BPF of the C182 is 80 Hz, the BPF of the C207 is 125 Hz, and the BPF of the DHC–6QP is 100 Hz. These low frequency tones have little influence on the A-weighted levels, but propagate through the atmosphere without significant reduction from atmospheric attenuation.

Since the helicopters in this evaluation have dominant main rotor BPF tones even lower in frequency than does the C182, one would expect to find a lack of correlation between the A-weighted noise levels for these helicopters and their values of audibility duration. However this does not seem the case as shown in the linear relationships derived by the NPS's consultant. The reason is likely the auditory masking of these lower frequency tones by the threshold of human hearing, which slopes up significantly in the lower frequencies. Thus, even though the helicopters generate a substantial amount of energy at the very low frequencies, a large amount of that energy is below the threshold of hearing.

The FAA concludes that while the correlation between ranking of certification noise levels and ranking of audibility duration is inexact, aircraft that meet the GCNP quiet aircraft technology designation are consistently less audible than those that do not. Therefore it is reasonable to expect that replacing non-compliant aircraft with larger, GCNP quiet aircraft technology designation aircraft (*e.g.*, replace a Cessna 207 with a Vistaliner or replace a B206L with an EC–130) should produce marked improvement toward substantial restoration of natural quiet.

*Addressing Selectable Noise Reduction Technologies*

The Aerospace Industries Association (AIA) raised concerns that since the FAA first proposed basing the GCNP quiet aircraft technology designation upon noise certification data, manufacturers have introduced new selectable (or automated) helicopter noise reduction technologies. AIA is concerned that exclusive use of only the reference noise conditions will discourage the application of helicopter noise reduction innovations gained through these new selectable technologies.

*FAA Response*

The FAA envisions that it could accept noise levels derived from selectable noise reduction technologies in the event that the noise certification regulations are amended to accommodate such a concept. The noise certification regulations, 14 CFR part 36, are based on standard reference conditions designed to acquire noise levels representing the noisiest flight configurations. Technical procedures do not currently exist that address selectable noise reduction technologies. A technical working group on aircraft noise under the International Civil Aviation Organization (ICAO) is addressing selectable noise reduction technology. This technical group, which is made up of international regulators, aircraft manufactures and the airline industry, will explore concepts that may lead to changes in the noise certification scheme. The work program for such an activity under ICAO usually takes 3–6 years to bring to fruition.

*Economic Consequences to Indirect Entities*

AIA and the Helicopter Association International (HAI) expressed a concern that the proposed rule applies to a very narrow application of commercialized air tour operators in the GCNP, but that it has broader implications upon helicopter manufacturing and operating industries. AIA and HAI claims that local jurisdictions, both domestic and foreign, could attempt to apply the quiet technology designation as criteria for use restriction. Such restrictions could result in significant costs to aircraft operators not linked in any way to the air tour industry. AIA and HAI recommend that the FAA should assess these costs. Alternatively, AIA and HAI recommend that the FAA adopt terminology that specifically narrows the quiet technology designation to that subset of aircraft for which it is intended. Both recommend replacing ''quiet technology designation'' with ''GCNP aircraft quiet air tour designation.'' AIA suggests that without this terminology change the potential for economic implications could be ''both substantial and adverse to the helicopter manufacturing and operating industries.''

*FAA Response*

The FAA appreciates the concerns expressed by AIA and HAI, but questions the likelihood that non-airport proprietor State and local governments would assert such authority. It is well settled that the FAA has exclusive sovereignty over and authority to regulate use of the navigable air space. Actions by State and local governments to use their police powers to regulate aircraft overflights would be federally preempted. Nonetheless, to minimize any possible unintended adverse consequences that could result from the proposed ''quiet technology designation'' terminology the FAA has changed the phrase ''quiet technology designation'' to ''GCNP quiet aircraft technology designation'' in all places that it is used in the rule. This terminology change will correctly limit the scope of the rule to air tour aircraft operating over GCNP, in accordance with the plain language of Section 804 of the Air Tour Act, and eliminate any need to analyze the costs of possible unintended adverse consequences. This more precise terminology will also help to emphasize the scope of this final rule

and its relationship to quiet technology requirements at other national parks under other provisions of the Air Tour Act.

*Helicopter Quiet Air Tour Designation Correspondence to the Flyover Condition*

AIA states that the U.S. helicopter industry is disadvantaged by the exclusive use of the flyover certification condition as the flight profile for gauging the GCNP quiet aircraft technology. AIA claims that U.S. noise research has not concentrated on this flight condition for achieving noise reduction and thus makes this approach inappropriate.

*FAA Response*

The FAA finds the use of the flyover condition from noise certification best matches the primary flight operation by helicopters in commercial sightseeing operations in the Grand Canyon. The flyover condition is the most basic reference flight profile for helicopters as defined in both 14 CFR part 36 Appendix H and Appendix J (equivalent to ICAO Annex 16 Chapters 8 and 11 helicopter noise certification standards, respectively). Since the establishment of the Appendix J (Chapter 11) noise certification procedures for helicopters under 7000 pounds, numerous helicopters have been certificated at only the flyover condition, including most U.S. manufactured small helicopters. Therefore, the FAA believes it is appropriate that such an openly available and highly reliable noise data source be utilized and incorporated into the GCNP quiet aircraft technology designation helicopter limits.

*Definition of ''Passenger Seat''*

AIA and HAI find that the proposed rule does not define ''number of passenger seats.'' These commenters recommend that FAA define the number of passenger seats to mean the maximum number of passenger seats for which the individual aircraft is certified.

*FAA Response*

The FAA agrees to define the number of passenger seats as the ''number of passenger seats for which an individual aircraft is configured.''

*Helicopter Weight Scaling*

AIA, HAI, and AgustaWestland state that the proposed helicopter noise limit does not appropriately reflect the scaling of noise levels with weight when considering helicopter technology that is reasonably achievable. These commenters recommend that the slope of 12 log should be incorporated rather than the 10 log to account for higher seating capacity and growth versions of existing helicopter designs.

*FAA Response*

The FAA finds the proposed GCNP quiet aircraft technology designation for helicopters to be appropriate. It was derived from the generally accepted common scaling with maximum gross weight, such that noise level increases 3 decibels for every doubling of aircraft weight (equating to 10 log slope). For example, the ICAO and FAA helicopter noise certification requirements for the takeoff, flyover, and approach noise conditions all use 3 decibels per doubling of weight to define the noise limits. The commenters' proposal to change it to 12 log seems designed to classify a certain helicopter, which is not currently used for commercial sightseeing, as meeting the GCNP quiet aircraft technology designation. Although the AgustaWestland EH–101 helicopter may have been built with some noise reduction technology, there is no evidence to show that it was built with the aim of meeting the rigorous standard needed to assist in the substantial restoration of natural quiet in GCNP. As such, the FAA rejects the recommendation, as it would weaken the effort towards the restoration of natural quiet.

*Noise Limits for Fixed Wing Aircraft*

AIA noted that the GCNP quiet aircraft technology limits for fixed wing aircraft do not account for changes to the small propeller-driven airplane noise certification scheme as found in the latest amendments to Appendix F and Appendix G of 14 CFR part 36.

*FAA Response*

The FAA agrees with AIA to update the appropriate rule language to reflect the technical changes made in 14 CFR part 36 amendment 22 (October 13, 1999). Amendment 22 replaced the 4-foot height microphone with a ground plane installation for small propeller-driven airplane noise certification tests. The change in microphone height affects the signal received. As such, the rule language of Part 93, Appendix A should be revised to account for the part 36 amendment noise level and to read as follows (added text is underlined):

''D. In the event that a flyover noise level is not available in accordance with Appendix F of 14 CFR part 36, the noise limit for propeller-driven airplanes with a takeoff noise level obtained in accordance with the measurement procedures prescribed in Appendix G is 74 dB *or 77 dB, depending on the 14 CFR part 36 amendment noise level*, for airplanes having two or fewer passenger seats, increasing at 3 dB per doubling of the number of passenger seats for airplanes having three or more passenger seats. The noise limit for propeller-driven airplanes with three or more passenger seats can be calculated by the formula:

LAmax(G) = 74 + 10log(# PAX seats/2) dB *for certifications obtained under 14 CFR part 36 Amendment 21 or earlier;*

LAmax(G) = 77 + 10log(# PAX seats/2) *dB for certifications obtained under 14 CFR part 36 Amendment 22 or later.''*

**Comments on Implementation**

Through this action, the FAA designates a standard for GCNP quiet aircraft technology that applies to certain aircraft in commercial air tour operations over GCNP. Under the provisions of Section 804 of the Air Tour Act, the FAA will address the establishment of routes or corridors for commercial air tour operations that employ quiet aircraft technology in subsequent rulemaking in consultation with the NPS and the NPOAG ARC. Since the ultimate objective is to determine the role of the GCNP quiet aircraft technology designation in achieving substantial restoration of natural quiet, the FAA requested specific comments to six questions. This section summarizes the specific comments made in response to each question below. These comments will be considered in subsequent rulemaking in consultation with the NPS and the NPOAG ARC, as provided in Section 804.

1. How reasonable is the noise efficiency approach (larger aircraft with more passenger seats are allowed to generate proportionally more noise) to define quiet technology and how appropriate is the use of certificated noise level as the basis?

The NPS believes that the implementation of noise efficient aircraft alone will not achieve substantial restoration of natural quiet. Achieving the goal will require some type of use restriction. Since audibility is the measure of natural quiet in GCNP, the NPS recommends that the sound levels produced by quiet technology aircraft be analyzed in terms of audibility, rather than certificated noise levels, to ensure that the aircraft is less audible than non-quiet technology aircraft.

Lighter Than Air Solar International, LLC suggests that an absolute noise level be used rather than noise efficiency.

AIA, HAI, and the United States Air Tour Association (USATA) support the proposed noise efficiency approach and the use of certificated noise levels. AIA and HAI also recommended some technical changes to this aspect of the rule. The FAA addressed these technical recommendations in the previous section of this document.

The Sierra Club acknowledges that the noise efficiency approach makes sense, *i.e.* to allow aircraft that give more passengers tour rides to make more noise, as long as larger quieter aircraft lead to fewer flights. The Sierra Club also acknowledges that certificated noise levels are the most readily available substantiated data but questions whether the ranking of certification noise data will give the same results in the rank of audibility.

The Friends of Grand Canyon support the proposed noise efficiency approach only if it will substantially reduce the number of flights.

2. What provisions should be made for changes in technology that result in source noise reduction and/or increased noise efficient aircraft designs?

Lighter Than Air Solar International, LLC suggests that the definition of quiet technology aircraft be expanded to include airships to accommodate for future innovations in both noise reduction technology and noise efficient aircraft designs.

AIA, HAI, and USATA recommend that incentives for research and development into source noise reduction technologies be made available to both manufacturers and others for developing Supplemental Type Certificates (STC). The incentives could take the form of research grants or directed appropriations to the National Aeronautics and Space Administration (NASA). As modifications and STCs are developed that reduce source noise and/or increase noise efficient aircraft designs, operators of the modified aircraft would be allowed increased operations within the GCNP.

The Sierra Club comments that some incentive is appropriate for retrofitting existing aircraft if it does not compromise the restoration of natural quiet.

3. What economic and operational incentives should be considered in order to achieve the transition to quieter aircraft and how should be the quiet technology designation be used in the establishment of incentives?

AIA favors direct U.S. government support for research and development of flyover source noise reduction technologies to assist U.S. manufacturers in developing new helicopters or modifying current helicopters.

HAI recommends tax incentive to operators who purchased quiet technology equipment, exemption to all caps and curfews, and route expansions for all quiet technology aircraft. Similarly, USATA and Lighter Than Air Solar International, LL recommend relief from all caps and curfews, incentive routes, low-cost federal loans, over fee rebates or investment tax credits or elimination of overflight fees altogether.

The Sierra Club opposes opening incentive routes through existing flight free zones. This commenter supports operational incentives that allocate larger numbers of flights to aircraft that have lower noise signatures without increasing the overall number of flights, unless the flights are substantially quieter.

The Grand Canyon National Park Service (GCNPS) opposes any increase in the total number of operations as an incentive for conversion to noise-efficient aircraft. Such an incentive would be counterproductive to the efforts to achieve the mandate of substantial restoration of natural quiet.

4. Should incentives include a ''flexible'' cap that would permit increasing operations of aircraft based upon the acquisition of leading-edge noise efficient technology by operators?

USATA and Lighter Than Air Solar International, LLC support a ''flexible'' cap that would include no cap for quiet technology designation aircraft. USATA also suggests that the cap should be raised for operators who use approved noise abatement flight procedures.

The Sierra Club objects to the idea of ''flexible'' cap that may allow an increase in number of flights with the introduction of quiet technology designation aircraft. This commenter does not believe there is any reason to treat the GCNP overflights differently from other park limits, such as number of rooms, parking places, modes of transportation, access to trails, and boating permits, which are all capped.

The GCNPS endorses noise budgets as one form of ''flexible'' cap. Under a noise budget, operators would be allocated a quantity of noise (''decibel-minutes'') equivalent to the amount and duration of noise each operation created during the 1997–98 base year, which they can use according to their operational needs.

One commenter suggested that rather than phasing out louder aircraft, the FAA should let the operators phase in the quieter ones.

5. Should growth be tied to an incentive system for existing operators to convert their fleet to quiet technology?

Grand Canyon Trust (The Trust) and Friends of the Grand Canyon do not support the use of incentives, nor do they believe that there should be any allowances for air tour operational growth. The Trust opposes duplicate routes connecting the same two points (with one incentive route and one non-incentive route), as this would spread the noise over a wider area.

Sierra Club supports growth tied to conversion to quiet aircraft as long as aircraft noise continues to fall below the 1975 levels.

HAI and USATA believe that the mechanisms they had suggested in response to Question 4 should provide the affected operators with the necessary incentives to convert to quieter aircraft.

Lighter Than Air Solar International, LLC favors incentives for operators' investment in quiet technology in the form of expanded operational rewards (allocations). The criteria for such rewards should also be based on decreased noise levels and not other, non-related criteria, such as seniority or company size.

The NPS and GCNPS both believe that growth incentives at the expense of substantial restoration of natural quiet are contrary to the mandate. Some limited growth in number of operations might be possible under a system of partial redistribution of reverted allocations.

6. What operational limitations (phase-out, expanded curfews, noise budgets, quota system, etc.) should be considered, and how should the quiet technology designation be used in the setting of the limitations?

The Trust and the Sierra Club support phase-out, expanded curfews, and an added noise cap approach for operational limitations. The Trust recommends that the caps for the number of aircraft should also apply to the number of flights. The Trust suggests that the annual number of flights decline until they are stabilized at the 1975 levels. This could be achieved by a 5% decline in flights per year over the next 15 or 20 years in the Dragon Corridor. The Trust supports the quiet technology designation as the noise standard to be applied to all commercial tour aircraft at the Grand Canyon. The Trust wants it instituted for the east end of the GCNP by 2007 and the entire GCNP by 2010. The Trust seeks to abolish the Dragon Corridor and asks that the Zuni Corridor become ''quiet aircraft only.'' In addition, the Sierra Club suggests a sliding scale

incentive to reward incremental noise reduction efforts.

The Friends of the Grand Canyon seek a cap on the number of passengers to assure the noise benefit and gains from reduced flights materialize. Such visitor caps have existed for 3 decades for ground visitors.

HAI and USATA endorse the elimination of all caps and curfews for quiet technology operators. HAI finds that a phase-out is unnecessary, as other operational incentives will cause an increase in quiet technology aircraft. HAI supports tax relief for the development of noise abatement techniques and low noise operational techniques that can be incorporated into the aircraft flight manual.

Lighter Than Air Solar International, LLC (11) support a ''gradual'' phase-out and continuing periodic FAA noise reviews.

The NPS and GCNPS have concluded that substantial restoration of natural quiet requires supplemental operational limitations, *i.e.,* reduced flights, quieter equipment for the total passenger carrying capability and accountability for number of flights. The NPS and GCNPS support a market-based flight allocation system for the benefit of natural quiet.

**Economic Summary**

Proposed changes to Federal regulations must undergo several economic analyses. First, Executive Order 12866 directs that each Federal agency shall propose or adopt a regulation only upon a reasoned determination that the benefits of the intended regulation justify its costs. Second, the Regulatory Flexibility Act of 1980 requires agencies to analyze the economic impact of regulatory changes on small entities. Third, the Trade Agreements Act (19 U.S.C. section 2531–2533) prohibits agencies from setting standards that create unnecessary obstacles to the foreign commerce of the United States. In developing U.S. standards, this Trade Act requires agencies to consider international standards and, where appropriate, that they be the basis of U.S. standards. Fourth, the Unfunded Mandates Reform Act of 1995 requires agencies to prepare a written assessment of the costs, benefits and other effects of proposed or final rules that include a Federal mandate likely to result in the expenditure by State, local or tribal governments, in the aggregate, or by the private sector, of $100 million or more, in any one year (adjusted for inflation).

In conducting these analyses, FAA has determined that this rule: (1) Has benefits that justify its costs, is not economically significant under Executive Order 12866, and is significant as defined in DOT's Regulatory Policies and Procedures; (2) will not have a significant economic impact on a substantial number of small entities; (3) will not reduce barriers to international trade; and (4) does not impose an unfunded mandate on State, local, or tribal governments, or on the private sector.

However, for regulations with an expected minimal impact the above-specified analyses are not required. The Department of Transportation Order DOT 2100.5 prescribes policies and procedures for simplification, analysis, and review of regulations. If it is determined that the expected impact is so minimal that the proposal does not warrant a full evaluation, a statement to that effect and the basis for it is included in the regulation.

This final rule does not require any action by operators, as it simply identifies which aircraft meet or do not meet the GCNP quiet aircraft technology designation. Further, this rule does not relieve operators of the currently established operational limitations. The expected outcome is to have a minimal impact.

*Comments*

Two commenters, AIA and HAI, submitted comments on the economic consequences to the proposal that have been discussed earlier in this final rule.

The FAA agrees with AIA and HAI and has changed the phrase ''quiet technology designation'' to ''GCNP quiet aircraft technology designation'' in all places that it is used in the rule. This change will eliminate any need to analyze the costs of possible unintended adverse consequences to entities not subject to this action and clarify how this final rule relates to quiet technology requirements under Section 805 and other sections of the Air Tour Act applicable to national parks other than GCNP.

*Regulatory Flexibility Determination*

The Regulatory Flexibility Act of 1980 (RFA) establishes ''as a principle of regulatory issuance that agencies shall endeavor, consistent with the objective of the rule and of applicable statutes, to fit regulatory and informational requirements to the scale of the business, organizations, and governmental jurisdictions subject to regulation.'' To achieve that principle, the RFA requires agencies to solicit and consider flexible regulatory proposals and to explain the rationale for their actions. The RFA covers a wide-range of small entities, including small businesses, not-for-profit organizations and small governmental jurisdictions.

Agencies must perform a review to determine whether a proposed or final rule will have a significant economic impact on a substantial number of small entities. If the determination is that it will, the agency must prepare a regulatory flexibility analysis as described in the RFA.

However, if an agency determines that a proposed or final rule is not expected to have a significant economic impact on a substantial number of small entities, Section 605(b) of the RFA provides that the head of the agency may so certify, and a regulatory flexibility analysis is not required. The certification must include a statement providing the factual basis for this determination, and the reasoning should be clear.

This action merely defines quiet technology designation for aircraft use in GCNP air tour operations but does not impose any requirements. This action does not impose any requirements to use aircraft that meet the GCNP quiet aircraft technology designation. This action does not grant any relief from current GCNP air tour requirements if an operator uses aircraft that meets the designation. Therefore, the FAA does not expect this rule to have any cost impact on small entities that provide GCNP air tours. Consequently, the FAA certifies that the rule will not have a significant economic impact on a substantial number of small entity GCNP air tour operators.

*International Trade Impact Analysis*

The Trade Agreement Act of 1979 prohibits Federal agencies from engaging in any standards or related activities that create unnecessary obstacles to the foreign commerce of the United States. Legitimate domestic objectives, such as safety, are not considered unnecessary obstacles. The statute also requires consideration of international standards and, where appropriate, that they be the basis for U.S. standards.

In accordance with the above statute, the FAA has determined that this action will have a minimal impact and, therefore, has determined that this rule will not result in any unnecessary obstacles to the foreign commerce of the United States.

*Unfunded Mandates Reform Act*

The Unfunded Mandates Reform Act of 1995 (the Act), enacted as Public Law 104–4 on March 22, 1995, is intended, among other things, to curb the practice of imposing unfunded Federal mandates

on State, local, and tribal governments. Title II of the Act requires each Federal agency to prepare a written statement assessing the effects of any Federal mandate in a proposed or final agency rule that may result in an expenditure of $100 million or more (adjusted annually for inflation) in any one year by State, local, and tribal governments, in the aggregate, or by the private sector; such a mandate is deemed to be a ''significant regulatory action.'' The FAA currently uses an inflation-adjusted value of $120.7 million in lieu of $100 million.

This action does not contain such a mandate. Therefore, the requirements of Title II of the Unfunded Mandates Reform Act of 1995 do not apply.

**Federalism Implications**

The regulations herein would not have substantial direct effects on the States, on the relationship between the National Government and the States, or on the distribution of power and responsibilities among the various levels of government. Therefore, in accordance with Executive Order 13132, it is determined that this rule does not have sufficient federalism implications to warrant the preparation of a federalism assessment.

**Environmental Review**

In accordance with FAA Order 1050.1E, the FAA has determined that this action is categorically excluded from environmental review under section 102(2)(C) of the National Environmental Policy Act (NEPA). This action was categorically excluded under FAA Order 1050.1D, Appendix 4, Paragraph 4.j (now Paragraph 312d in FAA Order 1050.1E), which covers regulations ''excluding those which if implemented may cause a significant impact on the human environment.'' This rule establishes quiet technology designations for aircraft operating in GCNP. It does not impose a phase-out or any alteration of any air tour operator's fleet of aircraft. It does not lift the operations limitation, alter any flight corridors through the park, or make any change to the SFRA. Finally, the FAA notes that this action alone has no impact on substantial restoration of natural quiet in the GCNP. Any environmental and economic impacts will depend on other future actions yet to be defined. Accordingly, this action will not individually or cumulatively have a significant effect on the human environment. In addition, the FAA has determined that there are no ''extraordinary circumstances'' associated with the proposed action that would otherwise require the preparation of an EA or EIS.

**Consultation With Tribal Governments**

Executive Order 13084 provides for consultation and coordination with Indian tribal governments in certain circumstances that are set forth in the executive order. The SNPRM Notice No. 03–05 described consultations with Indian tribal governments about this rule and taken their concerns into account. The FAA determined that additional consultations were not necessary because this action is required by statute and would not impose any substantial direct compliance costs on the communities of Indian tribal governments.

**Paperwork Reduction Act**

In accordance with the Paperwork Reduction Act of 1995 (Pub. L. 104–13), there are no requirements for information collection associated with this action. An agency may not conduct or sponsor and a person is not required to respond to a collection of information unless it displays a currently valid Office of Management and Budget (OMB) control number.

**List of Subjects in 14 CFR Part 93**

Air traffic control, Airports, Navigation (Air), Reporting and recordkeeping requirements.

**The Amendment**

■ For reasons set forth above, the Federal Aviation Administration amends part 93, in chapter I of Title 14, Code of Federal Regulations, as follows:

## PART 93—SPECIAL AIR TRAFFIC RULES AND AIRPORT TRAFFIC PATTERNS

■ 1. The authority citation for part 93 continues to read as follows:

**Authority:** 49 U.S.C. 106(g), 40103, 40106, 40109, 40113, 44502, 44514, 44701, 44719, 46301.

■ 2. Section 93.303 is amended to add the definitions in alphabetical order to read as follows:

**§ 93.303 Definitions.**

* * * * *

*GCNP quiet aircraft technology designation* means an aircraft that is subject to § 93.301 and has been shown to comply with the noise limit specified in appendix A of this part.

*Number of passenger seats* means the number of passenger seats for which an individual aircraft is configured.

* * * * *

■ 3. Appendix A is added to read as follows:

**Appendix A to Subpart U of Part 93—GCNP Quiet Aircraft Technology Designation**

This appendix contains procedures for determining the GCNP quiet aircraft technology designation status for each aircraft subject to § 93.301 determined during the noise certification process as prescribed under part 36 of this chapter. Where no certificated noise level is available, the Administrator may approve an alternative measurement procedure.

*Aircraft Noise Limit for GCNP Quiet Aircraft Technology Designation*

A. For helicopters with a flyover noise level obtained in accordance with the measurement procedures prescribed in Appendix H of 14 CFR part 36, the limit is 80 dB for helicopters having a seating configuration of two or fewer passenger seats, increasing at 3 dB per doubling of the number of passenger seats for helicopters having a seating configuration of three or more passenger seats. The noise limit for helicopters with three or more passenger seats can be calculated by the formula:

EPNL(H) = 80 +10log(# PAX seats/2) dB

B. For helicopters with a flyover noise level obtained in accordance with the measurement procedures prescribed in Appendix J of 14 CFR part 36, the limit is 77 dB for helicopters having a seating configuration of two or fewer passenger seats, increasing at 3 dB per doubling of the number of passenger seats for helicopters having a seating configuration of three or more passenger seats. The noise limit for helicopters with three or more passenger seats can be calculated by the formula:

SEL(J) = 77 + 10log(# PAX seats/2) dB

C. For propeller-driven airplanes with a measured flyover noise level obtained in accordance with the measurement procedures prescribed in Appendix F of 14 CFR part 36 without the performance correction defined in Sec. F35.201(c), the limit is 69 dB for airplanes having a seating configuration of two or fewer passenger seats, increasing at 3 dB per doubling of the number of passenger seats for airplanes having a seating configuration of three or more passenger seats. The noise limit for propeller-driven airplanes with three or more passenger seats can be calculated by the formula:

LAmax(F) = 69 + 10log(# PAX seats/2) dB

D. In the event that a flyover noise level is not available in accordance with Appendix F of 14 CFR part 36, the noise limit for propeller-driven airplanes with a takeoff noise level obtained in accordance with the measurement procedures prescribed in Appendix G is 74 dB or 77 dB, depending on 14 CFR part 36 amendment level, for airplanes having a seating configuration of two or fewer passenger seats, increasing at 3 dB per doubling of the number of passenger seats for airplanes having a seating configuration of three or more passenger seats. The noise limit for propeller-driven airplanes with three or more passenger seats can be calculated by the formula:

LAmax(G) = 74 + 10log(# PAX seats/2) dB for certifications obtained under 14 CFR part 36, Amendment 21 or earlier;

LAmax(G) = 77 + 10log(# PAX seats/2) dB for certifications obtained under 14 CFR part 36, Amendment 22 or later.

Issued in Washington, DC on March 22, 2005.

**Marion C. Blakey,**

*Administrator.*

[FR Doc. 05–6074 Filed 3–28–05; 8:45 am]

BILLING CODE 4910–13–P

# Reader Aids

**Federal Register**

Vol. 70, No. 59

Tuesday, March 29, 2005

## CUSTOMER SERVICE AND INFORMATION

| | |
|---|---|
| **Federal Register/Code of Federal Regulations** | |
| General Information, indexes and other finding aids | **202–741–6000** |
| **Laws** | **741–6000** |
| **Presidential Documents** | |
| Executive orders and proclamations | **741–6000** |
| **The United States Government Manual** | **741–6000** |
| **Other Services** | |
| Electronic and on-line services (voice) | **741–6020** |
| Privacy Act Compilation | **741–6064** |
| Public Laws Update Service (numbers, dates, etc.) | **741–6043** |
| TTY for the deaf-and-hard-of-hearing | **741–6086** |

## ELECTRONIC RESEARCH

### World Wide Web

Full text of the daily Federal Register, CFR and other publications is located at: **http://www.gpoaccess.gov/nara/index.html**

Federal Register information and research tools, including Public Inspection List, indexes, and links to GPO Access are located at: **http://www.archives.gov/federal_register/**

### E-mail

**FEDREGTOC-L** (Federal Register Table of Contents LISTSERV) is an open e-mail service that provides subscribers with a digital form of the Federal Register Table of Contents. The digital form of the Federal Register Table of Contents includes HTML and PDF links to the full text of each document.

To join or leave, go to **http://listserv.access.gpo.gov** and select *Online mailing list archives, FEDREGTOC-L, Join or leave the list (or change settings);* then follow the instructions.

**PENS** (Public Law Electronic Notification Service) is an e-mail service that notifies subscribers of recently enacted laws.

To subscribe, go to **http://listserv.gsa.gov/archives/publaws-l.html** and select *Join or leave the list (or change settings);* then follow the instructions.

**FEDREGTOC-L** and **PENS** are mailing lists only. We cannot respond to specific inquiries.

**Reference questions.** Send questions and comments about the Federal Register system to: **fedreg.info@nara.gov**

The Federal Register staff cannot interpret specific documents or regulations.

## FEDERAL REGISTER PAGES AND DATE, MARCH

9843–10020 ..... 1
10021–10312 ..... 2
10313–10484 ..... 3
10485–10860 ..... 4
10861–11108 ..... 7
11109–11530 ..... 8
11531–11826 ..... 9
11827–12110 ..... 10
12111–12400 ..... 11
12401–12582 ..... 14
12585–12786 ..... 15
12787–12960 ..... 16
12961–13088 ..... 17
13089–13342 ..... 18
13343–14384 ..... 21
14385–14522 ..... 22
14523–14966 ..... 23
14967–15198 ..... 24
15199–15552 ..... 25
15553–15722 ..... 28
15723–16094 ..... 29

## CFR PARTS AFFECTED DURING MARCH

At the end of each month, the Office of the Federal Register publishes separately a List of CFR Sections Affected (LSA), which lists parts and sections affected by documents published since the revision date of each title.

**3 CFR**

**Proclamations:**
7871 ..... 10483
7872 ..... 10857
7873 ..... 11531
7874 ..... 11533
7875 ..... 14965
7876 ..... 15723

**Executive Orders:**
11926 (Amended by EO 13373) ..... 12579
12293 (Amended by 13374) ..... 12961
12957 (See Notice of March 10, 2005) ..... 12581
12959 (See Notice of March 10, 2005) ..... 12581
13059 (See Notice of March 10, 2005) ..... 12581
13286 (See EO 13373) ..... 12579
13288 (See Notice of March 2, 2005) ..... 10859
13325 (Revoked by 13374) ..... 12961
13373 ..... 12579
13374 ..... 12961

**Administrative Orders:**
Memorandums:
Memorandum of February 18, 2005 ..... 11109
Memorandum of March 14, 2005 ..... 14967
Notices:
Notice of March 2, 2005 ..... 10859
Notice of March 10, 2005 ..... 12581
Presidential Determinations:
No 2005–21 of February 15, 2005 ..... 10313

**5 CFR**

630 ..... 13343
2634 ..... 12111
2635 ..... 12111
Ch. XIV ..... 11535, 12583

**Proposed Rules:**
213 ..... 12812
950 ..... 15783

**6 CFR**

**Proposed Rules:**
5 ..... 14427, 15602

**7 CFR**

301 ..... 10315, 10861, 11111, 15553
331 ..... 13242
925 ..... 11112
955 ..... 11114
959 ..... 15199
983 ..... 9843
985 ..... 14969, 15557
987 ..... 11117
993 ..... 15560
1131 ..... 9846
1160 ..... 11535, 14974
1469 ..... 15201
1479 ..... 15725
1924 ..... 10862

**Proposed Rules:**
56 ..... 9883
70 ..... 9883
319 ..... 11886
800 ..... 13411
927 ..... 11155
983 ..... 15602
1033 ..... 10337
1466 ..... 14578

**8 CFR**

**Proposed Rules:**
214 ..... 11585

**9 CFR**

94 ..... 12112, 15563
95 ..... 12112
121 ..... 13242

**Proposed Rules:**
113 ..... 12813, 12814
301 ..... 15017
303 ..... 15017
317 ..... 15017
318 ..... 15017
319 ..... 15017
320 ..... 15017
325 ..... 15017
331 ..... 15017
381 ..... 12420, 15017
417 ..... 15017
430 ..... 15017

**10 CFR**

300 ..... 15164, 15169

**Proposed Rules:**
50 ..... 10901
727 ..... 12974

**11 CFR**

100 ..... 13089
104 ..... 13089
300 ..... 12787

**12 CFR**

25 ..... 15570
30 ..... 15736
208 ..... 11827, 15736
225 ..... 11827, 15736
228 ..... 15570
345 ..... 15570
364 ..... 15736
509 ..... 10021

563e.....10023, 15570
568.....15736
570.....15736
622.....12583
**Proposed Rules:**
25.....12148
210.....10509
228.....12148
229.....10509
Ch. III.....13413
345.....12148
712.....14579
1731.....15018

**13 CFR**

125.....14523

**14 CFR**

13.....13345
23.....11838, 11841
39 .....9848, 9851, 9853, 10030, 10032, 10034, 10035, 10485, 11536, 11844, 11846, 11848, 12113, 12115, 12117, 12119, 12120, 12124, 12125, 12401, 12402, 12404, 12406, 12408, 12410, 12790, 12791, 12963, 13074, 13092, 13094, 13345, 13347, 13349, 13353, 13356, 13359, 13362, 13365, 13368, 15228, 15574, 15577
71 .....10318, 10862, 11850, 11851, 11852, 11853, 11854, 11855, 11857, 12127, 12128, 12129, 12130, 12412, 12414, 13240, 13370, 14529, 14976, 15580, 15754
93.....16084
97.....12131, 13095
121.....15194
145.....15580
158.....14928
1214.....12966
1310.....10037
**Proposed Rules:**
39 .....10337, 10339, 10342, 10344, 10513, 10517, 11165, 11166, 11168, 11170, 11172, 11585, 11588, 12421, 12612, 12614, 12616, 12618, 12815, 12816, 12819, 12978, 12981, 12982, 12986, 14428, 14430, 14432, 14580, 14585, 14587, 14589, 14592, 14594, 14597, 14599, 15019, 15784
71 .....10346, 10917, 11886, 12161, 12162, 12423, 12428, 12619, 14601, 15022, 15693
73.....15606
93.....15520
413.....9885
415.....9885
417.....9885

**15 CFR**

700.....10864
730.....14385
738.....14387
740.....11858, 14387
742.....14387
744.....10865, 11858
764.....14387
772.....11858
774.....11858, 14387
902 .....9856, 10174, 13097
**Proposed Rules:**
734.....15607
772.....15607

**16 CFR**

801.....11502
802.....11502
803.....11502
**Proposed Rules:**
320.....12823

**17 CFR**

210.....11528
228.....11528
229.....11528
240.....11528
249.....11528
270.....13328
**Proposed Rules:**
150.....12621
239.....10521
240.....10521
274.....10521

**18 CFR**

381.....14393

**19 CFR**

10.....10868
12.....11539
24.....10868
162.....10868
163.....10868
178.....10868
191.....10868
360.....12133

**20 CFR**

404 .....11863, 14977, 15227
422.....14977
1002.....12106
**Proposed Rules:**
418.....10558
498.....14603
655.....11592

**21 CFR**

1.....14978
25.....14978
26.....14978
80.....15755
99.....14978
101.....12414
172.....15756
179.....15583
184.....14530
201.....14978
203.....14978
206.....14978
310.....14978
312.....14978
314.....14978
510.....11120, 13098
520.....13098
556.....15758
573.....13099
600.....14978
601.....14978
606.....14978
607.....14978
610.....14978
640.....14978
660.....14978
680.....14978
807.....14978
822.....14978
862.....11865, 11867
866.....14532
**Proposed Rules:**
864.....11887
1310.....9889

**24 CFR**

203.....16080

**25 CFR**

11.....15759
15.....11804
**Proposed Rules:**
542.....11893

**26 CFR**

1 ...9869, 10037, 10319, 10488, 11121, 12439, 12793, 13100, 14394, 14395, 14494, 15227
301.....10885, 12140
602.....10319
**Proposed Rules:**
1 .....10062, 10349, 11903
31.....12164
301.....10572, 12166

**27 CFR**

**Proposed Rules:**
9.....11174, 11178

**28 CFR**

28.....10886
67.....12141
83.....12141

**29 CFR**

1915.....13370
4000.....11540
4010.....11540
4022.....12585
4044.....12585
**Proposed Rules:**
2200.....10574
2204.....10574
2520.....12046
2550.....12046
2578.....12046
4000.....11592
4007.....11592
4044.....12429

**30 CFR**

206.....11869
906.....14986
917.....11121
**Proposed Rules:**
250 .....12626, 14607, 15246
256.....12626
816.....13076
817.....13076

**31 CFR**

315.....14940
316.....14940
351.....14940
353.....14940
359.....14940
360.....14940
363.....14940
535.....15761
550.....15761
560.....15583
575.....15761

**32 CFR**

189.....15762
199.....12798
725.....12966
**Proposed Rules:**
184.....16038

**33 CFR**

100 .....10887, 10889, 15763
117 .....12805, 13101, 15763, 15765, 15767
165 .....11546, 11549, 12416, 15585, 15767
166.....11551
174.....13102, 15587
334.....15228
401.....12967
**Proposed Rules:**
Ch. I.....11912
100 .....13122, 15786, 15788
110.....9892
117.....9895, 10349
147.....14612, 14614
165.....11595, 11598
168.....15609
334.....15247
402.....15029

**34 CFR**

225.....14999
606.....13371
607.....13371
611.....13371
637.....13371
648.....13371
656.....13371
657.....13371
658.....13371
660.....13371
661.....13371
662.....13371
663.....13371
664.....13371
669.....13371

**36 CFR**

242.....13377
**Proposed Rules:**
7.....12988
1195.....14435

**37 CFR**

1.....10488
102.....10488
104.....10488
150.....10488
202.....15587
**Proposed Rules:**
270.....12631

**38 CFR**

3.....15590

**39 CFR**

111.....14534

**40 CFR**

52 .....11123, 11125, 11552, 11553, 11879, 11882, 12416, 12587, 13105, 15592, 15769, 15774
61.....13396
62 .....9872, 10490, 10891, 12591
63.....13108, 15994
81.....11553, 11882
122.....11560

180 .....11563, 11572, 14535, 14546, 14551
228.....10041
260.....10776
261.....10776
262.....10776
263.....10776
264.....10776
265.....10776
271 .....10776, 12416, 12593, 12973, 14556, 15594
272.....11132
**Proposed Rules:**
51.....9897
52 .....11179, 11913, 12632, 13124, 13125, 13425, 14616, 15790, 15791
62 .....9901, 10581, 10918
63.....13127, 15250
70.....15250
71.....15250
78.....9897
81.....13425
97.....9897
152.....12276
158.....12276
180.....14618
194.....11913
228.....12632
271 .....12435, 12634, 13127, 14623, 15611
372.....10919
721.....9902

**41 CFR**

105.....14559
302-17 .....12598, 14560
**Proposed Rules:**
101-48.....15792
102-41.....15792

**42 CFR**

72.....13294
73.....13294
400.....13397
401.....11420
403.....13397, 15229
405.....11420
411.....13397
416.....15229
417.....13397, 13401
418.....15229
422.....13401
423.....13397
460.....15229
482.....15229
483.....15229
485.....15229
1003.....13294
**Proposed Rules:**
405.....15264
413.....15265
414.....10746
441.....15265
482.....15264, 15266
486.....15265
488.....15264
498.....15265

**43 CFR**

4.....11804
423.....15778
1600.....14561

**44 CFR**

64.....12600
**Proposed Rules:**
67.....10582, 10583

**45 CFR**

1611.....10327
**Proposed Rules:**
1801.....12436

**46 CFR**

401 .....12083, 13574, 15779
502.....10328
503.....10328
515.....10328
520.....10328
530.....10328
535.....10328
540.....10328
550.....10328
555.....10328
560.....10328

**47 CFR**

Ch. I.....12601
54.....10057
64 .....9875, 10894, 12605, 14567, 14568
73 .....9876, 10895, 10896, 12807, 13116, 14570, 14571
76.....14412, 14572
90.....15005
**Proposed Rules:**
Ch. I.....12828, 15030
15.....13139
22.....11916
64.....10930
73 .....10351, 10352, 12832, 12833, 12834, 13001, 13002, 13003, 13004, 13139, 15044, 15045, 15046, 15047
76.....11314, 15048
90.....13143

**48 CFR**

Ch. 1.....11736, 11764, 14950, 14962
2.....11737
4.....14950
5.....14950
6.....11739
8.....11737
13.....11740, 14950
15.....14950
16.....11737
19.....11740, 14950
25.....11742
28.....11763
30.....11743
31.....11763
36.....11737
42.....11763, 14950
44 .....11761, 11762, 14950
52 .....11740, 11743, 11761, 11763
53.....14950
207.....14572
209.....14573
219.....14574
234.....14574
237.....14576
242.....14574
252.....14574
501.....15779
Ch. 3.....11583
**Proposed Rules:**
Ch. 2.....14623
207.....14623
215.....14624
225.....14625, 14628
243.....14629
546.....12167, 13005
252.....14625, 14628
552.....12167, 13005
904.....12974
952.....12974

**49 CFR**

23.....14495
190.....11135
191.....11135
192.....10332, 11135
193.....11135
194.....11135
195.....10332, 11135
198.....11135
199.....11135
209.....11052
222.....13117
229.....13117
234.....11052
236.....11052
571.....14420, 15596
1540.....9877
**Proposed Rules:**
Subtitle A .....15797
23.....14520
107.....11768
171.....11768
172.....11768
173.....11768
178.....11768
180.....11768
222.....15274
229.....15274
541.....10066
544.....12635
571.....11184, 11186
572.....11189

**50 CFR**

17 .....10493, 11140, 15239, 15780
100.....13377
622.....9879, 13117
635.....10896, 12142
648 .....11584, 12808, 13402, 13406
660.....13118
679 ...9856, 9880, 9881, 10174, 10507, 10508, 11884, 12143, 12808, 12809, 12810, 12811, 13119, 13120, 14577, 14756, 15010, 15600, 15782
680.....10174
**Proposed Rules:**
15.....15798
17.....15052
222.....15800
223.....13151
224.....13151
622 .....10931, 10933, 11600, 13152
635 .....11190, 11922, 14630
648 .....10585, 12168, 12639, 13156, 15803
679.....15063

## REMINDERS

The items in this list were editorially compiled as an aid to Federal Register users. Inclusion or exclusion from this list has no legal significance.

## RULES GOING INTO EFFECT MARCH 29, 2005

**AGRICULTURE DEPARTMENT**

**Agricultural Marketing Service**

Prunes (dried) produced in—
California; published 3-28-05

**COMMERCE DEPARTMENT**

**National Oceanic and Atmospheric Administration**

Fishery conservation and management:
Alaska; fisheries of Exclusive Economic Zone—
Pacific cod; published 3-29-05

**DEFENSE DEPARTMENT**

Mineral exploration and extraction on DOD lands; CFR part removed; published 3-29-05

**ENVIRONMENTAL PROTECTION AGENCY**

Air pollutants, hazardous; national emission standards:
Electric utility steam generating units and removal of coal- and oil-fired electric utility steam generating units from Section 112(c) list; published 3-29-05

Air quality implementation plans; approval and promulgation; various States:
Michigan; published 1-28-05

**FEDERAL DEPOSIT INSURANCE CORPORATION**

Response programs for unauthorized access to customer information and customer notice; interagency guidance; published 3-29-05

**FEDERAL RESERVE SYSTEM**

Response programs for unauthorized access to customer information and customer notice; interagency guidance; published 3-29-05

**GENERAL SERVICES ADMINISTRATION**

Acquisition regulations:
General Services Administration Aquisition Regulation; deviations; published 3-29-05

**HEALTH AND HUMAN SERVICES DEPARTMENT**

**Food and Drug Administration**

Animal drugs, feeds, and related products:
Zeranol; published 3-29-05

Food additives:
Glycerol ester of gum rosin; published 3-29-05

**HOMELAND SECURITY DEPARTMENT**

**Coast Guard**

Great Lakes pilotage regulations:
Rate adjustments; correction; published 3-29-05

**INTERIOR DEPARTMENT**

**Indian Affairs Bureau**

Law and order on Indian reservations:
Winnemucca Reservation and Colony, NV; Courts of Indian Offenses; published 3-29-05

**INTERIOR DEPARTMENT**

**Fish and Wildlife Service**

Endangered and threatened species:
Vicuna (various populations in South America); reclassification; published 3-29-05

**INTERIOR DEPARTMENT**

**Reclamation Bureau**

Public conduct on Reclamation lands and projects; published 3-29-05

**TRANSPORTATION DEPARTMENT**

**Federal Aviation Administration**

Air traffic operating and flight rules, etc.:
Grand Canyon National Park; special flight rules in vicinity—
Noise limitations; published 3-29-05

Airworthiness directives:
Cessna; published 3-25-05
General Electric Co.; published 2-22-05
Hartzell Propeller Inc.; published 2-22-05

**TREASURY DEPARTMENT**

**Comptroller of the Currency**

Response programs for unauthorized access to customer information and customer notice; interagency guidance; published 3-29-05

**TREASURY DEPARTMENT**

**Foreign Assets Control Office**

Iranian assets control, Libyan sanctions, and Iraqi sanctions regulations:
Civil penalties; administrative collection; published 3-29-05

**TREASURY DEPARTMENT**

**Thrift Supervision Office**

Response programs for unauthorized access to customer information and customer notice; interagency guidance; published 3-29-05

## COMMENTS DUE NEXT WEEK

**AGRICULTURE DEPARTMENT**

**Agricultural Marketing Service**

Cotton classing, testing and standards:
Classification services to growers; 2004 user fees; Open for comments until further notice; published 5-28-04 [FR 04-12138]

**AGRICULTURE DEPARTMENT**

**Animal and Plant Health Inspection Service**

Exportation and importation of animals and animal products:
Highly pathogenic avian influenza; list of affected regions—
Malaysia; comments due by 4-4-05; published 2-1-05 [FR 05-01796]

**COMMERCE DEPARTMENT**

**National Oceanic and Atmospheric Administration**

Fishery conservation and management:
Northeastern United States fisheries—
Monkfish; comments due by 4-4-05; published 3-18-05 [FR 05-05348]

International fisheries regulations:
Atlantic highly migratory species—
Bluefin tuna, bigeye tuna, and swordfish; comments due by 4-7-05; published 3-8-05 [FR 05-04477]

**COMMERCE DEPARTMENT**

**Patent and Trademark Office**

Patent cases:
Patent Cooperation Treaty applications entering the national stage; fees; comments due by 4-4-05; published 2-1-05 [FR 05-01850]

**COURT SERVICES AND OFFENDER SUPERVISION AGENCY FOR THE DISTRICT OF COLUMBIA**

Semi-annual agenda; Open for comments until further notice; published 12-22-03 [FR 03-25121]

**DEFENSE DEPARTMENT**

Acquisition regulations:
Extraordinary contractual actions; comments due by 4-8-05; published 2-7-05 [FR 05-02173]
Pilot Mentor-Protege Program; Open for comments until further notice; published 12-15-04 [FR 04-27351]

**EDUCATION DEPARTMENT**

Grants and cooperative agreements; availability, etc.:
Vocational and adult education—
Smaller Learning Communities Program; Open for comments until further notice; published 2-25-05 [FR E5-00767]

**ENERGY DEPARTMENT**

Meetings:
Environmental Management Site-Specific Advisory Board—
Oak Ridge Reservation, TN; Open for comments until further notice; published 11-19-04 [FR 04-25693]

**ENERGY DEPARTMENT**

**Energy Efficiency and Renewable Energy Office**

Commercial and industrial equipment; energy efficiency program:
Test procedures and efficiency standards—
Commercial packaged boilers; Open for comments until further notice; published 10-21-04 [FR 04-17730]

**ENERGY DEPARTMENT**

**Federal Energy Regulatory Commission**

Electric rate and corporate regulation filings:
Virginia Electric & Power Co. et al.; Open for comments until further notice; published 10-1-03 [FR 03-24818]

**ENVIRONMENTAL PROTECTION AGENCY**

Air programs; approval and promulgation; State plans for designated facilities and pollutants:
Pennsylvania; comments due by 4-4-05; published 3-4-05 [FR 05-04270]
Tennessee; comments due by 4-6-05; published 3-7-05 [FR 05-04336]

Air quality implementation plans; approval and

promulgation; various States:
California; comments due by 4-7-05; published 3-8-05 [FR 05-04340]
Washington; comments due by 4-7-05; published 3-8-05 [FR 05-04470]
Environmental statements; availability, etc.:
Coastal nonpoint pollution control program—
Minnesota and Texas; Open for comments until further notice; published 10-16-03 [FR 03-26087]
Water pollution control:
National Pollutant Discharge Elimination System—
Concentrated animal feeding operations in New Mexico and Oklahoma; general permit for discharges; Open for comments until further notice; published 12-7-04 [FR 04-26817]
Water pollution; effluent guidelines for point source categories:
Meat and poultry products processing facilities; Open for comments until further notice; published 9-8-04 [FR 04-12017]
Transportation equipment cleaning operations; correction; comments due by 4-4-05; published 2-1-05 [FR 05-01861]
Water programs:
Federal Insecticide, Fungicide, and Rodenticide Act; implementation—
Pesticides applied to U.S. waters; statement and guidance; comments due by 4-4-05; published 2-1-05 [FR 05-01868]

**FEDERAL COMMUNICATIONS COMMISSION**

Committees; establishment, renewal, termination, etc.:
Technological Advisory Council; Open for comments until further notice; published 3-18-05 [FR 05-05403]
Common carrier services:
Federal-State Joint Board on Universal Service—
Rural health care support mechanism; comments due by 4-8-05; published 2-7-05 [FR 05-02268]
Interconnection—
Incumbent local exchange carriers unbounding obligations; local competition provisions; wireline services offering advanced telecommunications capability; Open for comments until further notice; published 12-29-04 [FR 04-28531]
Radio stations; table of assignments:
Pennsylvania; comments due by 4-4-05; published 3-3-05 [FR 05-04113]
Television broadcasting:
Cable television systems—
Satellite Home Viewer Extension and Reauthorization Act; Communications Act Section 340; implementation; comments due by 4-8-05; published 3-8-05 [FR 05-03847]

**HEALTH AND HUMAN SERVICES DEPARTMENT**

**Centers for Medicare & Medicaid Services**

Medicare:
Electronic Prescription Drug Program; voluntary Medicare prescription drug benefit; comments due by 4-5-05; published 2-4-05 [FR 05-01773]
Organ procurement organizations; conditions for coverage; comments due by 4-5-05; published 2-4-05 [FR 05-01695]
Organ transplant centers; hospital participation conditions; approval requirements; comments due by 4-5-05; published 2-4-05 [FR 05-01696]

**HEALTH AND HUMAN SERVICES DEPARTMENT**

**Food and Drug Administration**

Human drugs:
Orally administered drug products; symptoms associated with overindulgence in food and drink, relief (OTC); tentative final monograph; comments due by 4-5-05; published 1-5-05 [FR 05-00154]
Reports and guidance documents; availability, etc.:
Evaluating safety of antimicrobial new animal drugs with regard to their microbiological effects on bacteria of human health concern; Open for comments until further notice; published 10-27-03 [FR 03-27113]
Medical devices—
Dental noble metal alloys and base metal alloys; Class II special controls; Open for comments until further notice; published 8-23-04 [FR 04-19179]

**HEALTH AND HUMAN SERVICES DEPARTMENT**

Supplemental standards of ethical conduct and financial disclosure requirements for department employees; comments due by 4-4-05; published 2-3-05 [FR 05-02029]

**HOMELAND SECURITY DEPARTMENT**

**Coast Guard**

Anchorage regulations:
Maryland; Open for comments until further notice; published 1-14-04 [FR 04-00749]
Ports and waterways safety:
Alaska; high capacity passenger vessels protection; regulated navigation area and security zones; comments due by 4-8-05; published 3-9-05 [FR 05-04598]
Fifth Coast Guard District waters; safety and security zones; comments due by 4-8-05; published 3-9-05 [FR 05-04602]

**HOMELAND SECURITY DEPARTMENT**

Nonimmigrant classes:
Aliens—
H-2B Program; one-step application process for U.S. employers seeking workers to perform temporary labor or services; comments due by 4-8-05; published 3-9-05 [FR 05-04514]

**HOUSING AND URBAN DEVELOPMENT DEPARTMENT**

**Federal Housing Enterprise Oversight Office**

Safety and soundness:
Mortgage fraud reporting; comments due by 4-4-05; published 3-24-05 [FR 05-05776]

**INTERIOR DEPARTMENT**

**Fish and Wildlife Service**

Endangered and threatened species permit applications
Recovery plans—
Paiute cutthroat trout; Open for comments until further notice; published 9-10-04 [FR 04-20517]
Endangered and threatened species:
Salt Creek tiger beetle; comments due by 4-4-05; published 2-1-05 [FR 05-01669]
Scimitar-horned oryx, addax, and dama gazelle; comments due by 4-4-05; published 2-1-05 [FR 05-01698]

**LABOR DEPARTMENT**

**Employment and Training Administration**

Aliens; temporary employment in U.S.:
H-2B petitions in all occupations other than excepted occupations; post-adjudication audits; comments due by 4-8-05; published 3-9-05 [FR 05-04534]

**NATIONAL ARCHIVES AND RECORDS ADMINISTRATION**

NARA facilities:
Locations and hours; comments due by 4-8-05; published 2-7-05 [FR 05-02256]

**NUCLEAR REGULATORY COMMISSION**

Environmental statements; availability, etc.:
Fort Wayne State Developmental Center; Open for comments until further notice; published 5-10-04 [FR 04-10516]

**OCCUPATIONAL SAFETY AND HEALTH REVIEW COMMISSION**

Practice and procedure:
Practice before Commission; procedural rules; revisions; comments due by 4-4-05; published 3-4-05 [FR 05-04257]

**SECURITIES AND EXCHANGE COMMISSION**

Securities:
Mutual funds and other securities; point of sale disclosure and transaction confirmation requirements; comments due by 4-4-05; published 3-4-05 [FR 05-04215]

**SMALL BUSINESS ADMINISTRATION**

Disaster loan areas:
Maine; Open for comments until further notice; published 2-17-04 [FR 04-03374]
Small business size standards:
Size standards for most industries and SBA

programs; restructuring; comments due by 4-3-05; published 1-19-05 [FR 05-01035]

**STATE DEPARTMENT**

Passports:

Electronic passport; definitions, validity, replacement, and expedited processing; comments due by 4-4-05; published 2-18-05 [FR 05-03080]

**OFFICE OF UNITED STATES TRADE REPRESENTATIVE**

**Trade Representative, Office of United States**

Generalized System of Preferences:

2003 Annual Product Review, 2002 Annual Country Practices Review, and previously deferred product decisions; petitions disposition; Open for comments until further notice; published 7-6-04 [FR 04-15361]

**TRANSPORTATION DEPARTMENT**

Navigation of foreign civil aircraft within the United States; policy determination request; comments due by 4-8-05; published 2-7-05 [FR 05-02035]

**TRANSPORTATION DEPARTMENT**

**Federal Aviation Administration**

Airworthiness directives:

Air Tractor, Inc.; comments due by 4-5-05; published 2-9-05 [FR 05-02507]

Airbus; comments due by 4-4-05; published 3-3-05 [FR 05-04078]

Boeing; Open for comments until further notice; published 8-16-04 [FR 04-18641]

Bombardier; comments due by 4-7-05; published 3-8-05 [FR 05-04407]

Empresa Brasileria de Aeronautica, S.A.; comments due by 4-7-05; published 3-8-05 [FR 05-04409]

Kelly Aerospace Power Systems; comments due by 4-7-05; published 3-9-05 [FR 05-04556]

McDonnell Douglas; comments due by 4-5-05; published 2-4-05 [FR 05-01931]

Rolls-Royce plc; comments due by 4-4-05; published 2-2-05 [FR 05-01799]

**TREASURY DEPARTMENT**

**Internal Revenue Service**

Employment taxes and collection of income taxes at source:

Flat rate supplemental wage withholding; comments due by 4-5-05; published 1-5-05 [FR 05-00071]

**TREASURY DEPARTMENT**

**Alcohol and Tobacco Tax and Trade Bureau**

Alcohol; viticultural area designations:

Covelo, Mendocino County, CA; comments due by 4-4-05; published 2-2-05 [FR 05-01875]

## LIST OF PUBLIC LAWS

This is a continuing list of public bills from the current session of Congress which have become Federal laws. It may be used in conjunction with "P L U S" (Public Laws Update Service) on 202–741–6043. This list is also available online at *http://www.archives.gov/federal_register/public_laws/public_laws.html*.

The text of laws is not published in the **Federal Register** but may be ordered in "slip law" (individual pamphlet) form from the Superintendent of Documents, U.S. Government Printing Office, Washington, DC 20402 (phone, 202–512–1808). The text will also be made available on the Internet from GPO Access at *http://www.gpoaccess.gov/plaws/index.html*. Some laws may not yet be available.

**S. 686/P.L. 109–3**

For the relief of the parents of Theresa Marie Schiavo. (Mar. 21, 2005; 119 Stat. 15)

**Last List January 23, 2005**

## Public Laws Electronic Notification Service (PENS)

**PENS** is a free electronic mail notification service of newly enacted public laws. To subscribe, go to *http://listserv.gsa.gov/archives/publaws-l.html*

**Note:** This service is strictly for E-mail notification of new laws. The text of laws is not available through this service. **PENS** cannot respond to specific inquiries sent to this address.