AUTHENTICATED U.S. GOVERNMENT INFORMATION GPO

Federal Register

1–13–05 Thursday
Vol. 70 No. 9 Jan. 13, 2005

Pages 2325–2560

The **FEDERAL REGISTER** (ISSN 0097–6326) is published daily, Monday through Friday, except official holidays, by the Office of the Federal Register, National Archives and Records Administration, Washington, DC 20408, under the Federal Register Act (44 U.S.C. Ch. 15) and the regulations of the Administrative Committee of the Federal Register (1 CFR Ch. I). The Superintendent of Documents, U.S. Government Printing Office, Washington, DC 20402 is the exclusive distributor of the official edition. Periodicals postage is paid at Washington, DC.

The **FEDERAL REGISTER** provides a uniform system for making available to the public regulations and legal notices issued by Federal agencies. These include Presidential proclamations and Executive Orders, Federal agency documents having general applicability and legal effect, documents required to be published by act of Congress, and other Federal agency documents of public interest.

Documents are on file for public inspection in the Office of the Federal Register the day before they are published, unless the issuing agency requests earlier filing. For a list of documents currently on file for public inspection, see *www.archives.gov.*

The seal of the National Archives and Records Administration authenticates the Federal Register as the official serial publication established under the Federal Register Act. Under 44 U.S.C. 1507, the contents of the **Federal Register** shall be judicially noticed.

The **Federal Register** is published in paper and on 24x microfiche. It is also available online at no charge as one of the databases on GPO Access, a service of the U.S. Government Printing Office.

The online edition of the **Federal Register** *www.gpoaccess.gov/nara,* available through GPO Access, is issued under the authority of the Administrative Committee of the Federal Register as the official legal equivalent of the paper and microfiche editions (44 U.S.C. 4101 and 1 CFR 5.10). It is updated by 6 a.m. each day the **Federal Register** is published and includes both text and graphics from Volume 59, Number 1 (January 2, 1994) forward.

For more information about GPO Access, contact the GPO Access User Support Team, call toll free 1-888-293-6498; DC area 202-512-1530; fax at 202-512-1262; or via e-mail at *gpoaccess@gpo.gov.* The Support Team is available between 7:00 a.m. and 9:00 p.m. Eastern Time, Monday–Friday, except official holidays.

The annual subscription price for the **Federal Register** paper edition is $749 plus postage, or $808, plus postage, for a combined **Federal Register, Federal Register** Index and List of CFR Sections Affected (LSA) subscription; the microfiche edition of the **Federal Register** including the **Federal Register** Index and LSA is $165, plus postage. Six month subscriptions are available for one-half the annual rate. The prevailing postal rates will be applied to orders according to the delivery method requested. The price of a single copy of the daily **Federal Register,** including postage, is based on the number of pages: $11 for an issue containing less than 200 pages; $22 for an issue containing 200 to 400 pages; and $33 for an issue containing more than 400 pages. Single issues of the microfiche edition may be purchased for $3 per copy, including postage. Remit check or money order, made payable to the Superintendent of Documents, or charge to your GPO Deposit Account, VISA, MasterCard, American Express, or Discover. Mail to: New Orders, Superintendent of Documents, P.O. Box 371954, Pittsburgh, PA 15250-7954; or call toll free 1-866-512-1800, DC area 202-512-1800; or go to the U.S. Government Online Bookstore site, see *bookstore.gpo.gov.*

There are no restrictions on the republication of material appearing in the **Federal Register.**

How To Cite This Publication: Use the volume number and the page number. Example: 70 FR 12345.

Postmaster: Send address changes to the Superintendent of Documents, Federal Register, U.S. Government Printing Office, Washington DC 20402, along with the entire mailing label from the last issue received.

SUBSCRIPTIONS AND COPIES

PUBLIC

Subscriptions:

Paper or fiche	**202–512–1800**
Assistance with public subscriptions	**202–512–1806**

General online information **202–512–1530; 1–888–293–6498**

Single copies/back copies:

Paper or fiche	**202–512–1800**
Assistance with public single copies	**1–866–512–1800 (Toll-Free)**

FEDERAL AGENCIES

Subscriptions:

Paper or fiche	**202–741–6005**
Assistance with Federal agency subscriptions	**202–741–6005**

What's NEW!

Federal Register Table of Contents via e-mail

Subscribe to FEDREGTOC, to receive the **Federal Register** Table of Contents in your e-mail every day.

If you get the HTML version, you can click directly to any document in the issue.

To subscribe, go to **http://listserv.access.gpo.gov** and select:

Online mailing list archives
FEDREGTOC-L
Join or leave the list

Then follow the instructions.

What's NEW!

Regulations.gov, the award-winning Federal eRulemaking Portal

Regulations.gov is the one-stop U.S. Government web site that makes it easy to participate in the regulatory process.

Try this fast and reliable resource to find all rules published in the *Federal Register* that are currently open for public comment. Submit comments to agencies by filling out a simple web form, or use available e-mail addresses and web sites.

The Regulations.gov e-democracy initiative is brought to you by NARA, GPO, EPA and their eRulemaking partners.

Visit the web site at: **http://www.regulations.gov**

Printed on recycled paper.

Contents

Federal Register

Vol. 70, No. 9

Thursday, January 13, 2005

Agricultural Marketing Service
PROPOSED RULES
Pears (winter) grown in—
Oregon and Washington, 2519–2540

Agriculture Department
See Agricultural Marketing Service
See Commodity Credit Corporation
See Forest Service
NOTICES
Committees; establishment, renewal, termination, etc.:
National Sheep Industry Improvement Center Board of Directors, 2376

Architectural and Transportation Barriers Compliance Board
NOTICES
Meetings:
Courthouse Access Advisory Committee, 2389–2390

Army Department
NOTICES
Patent licenses; non-exclusive, exclusive, or partially exclusive:
Identification of small molecules of inhibitors anthrax factor, 2396

Centers for Disease Control and Prevention
NOTICES
Grants and cooperative agreements; availability, etc.:
National Cancer Prevention and Control Program, 2407–2410

Children and Families Administration
NOTICES
Agency information collection activities; proposals, submissions, and approvals, 2410–2411

Coast Guard
RULES
Anchorage regulations:
Massachusetts, 2353–2355
Drawbridge operations:
Louisiana, 2355
Ports and waterways safety:
Bering Sea, Aleutian Islands, and Unalaska Island, AK; safety zone, 2355–2357
Puget Sound, WA, Captain of Port Zone; security zone, 2357

Commerce Department
See Industry and Security Bureau
See International Trade Administration
See National Oceanic and Atmospheric Administration

Commodity Credit Corporation
NOTICES
Grants and cooperative agreements; availability, etc.:
Emerging Markets Program, 2376–2380
Foreign Market Development Cooperator Program, 2380–2382
Market Access Program, 2382–2384
Quality Samples Program, 2384–2386
Technical Assistance for Specialty Crops Program, 2386–2388

Commodity Futures Trading Commission
RULES
National Futures Association; review of disciplinary, membership denial, registration, and member responsibility actions decisions; amendments, 2350–2352

Consumer Product Safety Commission
PROPOSED RULES
Flammable Fabrics Act:
Bedclothes; flammability (open flame ignition) standard, 2513–2517
Mattresses and mattress and foundation sets; flammability (open flame) standard, 2469–2514

Defense Department
See Army Department
RULES
Acquisition regulations:
Australia and Morocco; free trade agreements, 2361–2366
Competition requirements; correction, 2361
NOTICES
Meetings:
Defense Acquisition University Board of Visitors, 2395
Servicemembers Civil Relief Act:
Housing price inflation adjustment, 2395–2396

Education Department
NOTICES
Agency information collection activities; proposals, submissions, and approvals, 2396
Grants and cooperative agreements; availability, etc.:
Advanced Placement Test Fee Program, 2397
Arts in Education Model Development and Dissemination Program; proposed priority, requirements, and definitions, 2397–2399
Professional Development for Arts Educators Program, 2399–2401
Meetings:
Special Education and Rehabilitative Services Office, 2401–2402

Energy Department
NOTICES
Natural gas exportation and importation:
Amerada Hess Corp. et al., 2402–2403

Environmental Protection Agency
RULES
Air quality implementation plans; approval and promulgation; various States:
New York, 2358–2360
NOTICES
Toxic and hazardous substances control:
Neurotoxicity test guideline development and harmonized test guideline; revocation and withdrawal requests; agency response, 2403–2404

Farm Credit System Insurance Corporation
NOTICES
Meetings, 2404

Federal Aviation Administration
RULES
Aircraft products and parts; certification procedures:
Armed Forces surplus aircraft; large reciprocating-engine powered airplanes; type certification; correction, 2325
Airworthiness directives:
Boeing, 2330–2333, 2339–2342
Rolls-Royce plc, 2333–2339
Airworthiness standards:
Special conditions—
Boeing Model 767-300 airplane, 2325–2330
Class E airspace, 2342–2348
PROPOSED RULES
Airworthiness directives:
Cirrus Design Corp., 2370–2372
NOTICES
Airport noise compatibility program:
Noise exposure maps—
Missoula International Airport, MT, 2451–2452
Exemption petitions; summary and disposition, 2453–2454
Meetings:
Aviation Rulemaking Advisory Committee, 2454

Federal Communications Commission
RULES
Common carrier services:
Individuals with hearing and speech disabilities; telecommunications relay and speech-to-speech services; three-way calling requirement; waiver expiration, 2360–2361
NOTICES
Agency information collection activities; proposals, submissions, and approvals, 2404–2405
Common carrier services:
Enhanced 911 capabilities for multi-line telephone systems; States deployment actions, 2405–2406

Federal Election Commission
NOTICES
Meetings; Sunshine Act, 2406

Federal Motor Carrier Safety Administration
NOTICES
Motor carrier safety standards:
Commercial Driver's License Information System; information availability policy, 2454–2455

Federal Railroad Administration
NOTICES
Safety advisories, bulletins, and directives:
Position of switches in non-signaled territory, 2455–2456

Federal Reserve System
NOTICES
Banks and bank holding companies:
Permissible nonbanking activities, 2406–2407

Food and Drug Administration
RULES
Animal drugs, feeds, and related products:
Levamisole powder for oral solution, 2352–2353
Sponsor name and address changes—
Alstoe, Ltd., 2352
NOTICES
Agency information collection activities; proposals, submissions, and approvals, 2411–2415
Food additive petitions:
Alltech, Inc., 2415
Reports and guidance documents; availability, etc.:
Labeling over-the-counter human drug products-questions and answers, 2415–2416

Forest Service
NOTICES
Appealable decisions; legal notice:
Northern Region, 2388
Meetings:
Resource Advisory Committees—
Madison-Beaverhead, 2389
North Central Idaho, 2388–2389
Siskiyou County, 2389
Shasta-Trinity National Forest, CA; collaborative off-highway vehicle route designation process, 2389

Government Ethics Office
NOTICES
Intelligence Reform and Terrorism Prevention Act:
Executive branch employees; financial disclosure process; recommendations and evaluation study, 2407

Health and Human Services Department
See Centers for Disease Control and Prevention
See Children and Families Administration
See Food and Drug Administration
See Health Resources and Services Administration

Health Resources and Services Administration
NOTICES
Agency information collection activities; proposals, submissions, and approvals, 2416–2417
Meetings:
Interdisciplinary, Community-Based Linkages Advisory Committee, 2417

Homeland Security Department
See Coast Guard
See Transportation Security Administration

Indian Affairs Bureau
NOTICES
Committees; establishment, renewal, termination, etc.:
Exceptional Education Advisory Board, 2417–2421
Indian Reservation Roads Program Coordinating Committee, 2422–2423
Land acquisitions into trust:
White Earth Chippewa Reservation of Minnesota, 2423–2425

Industry and Security Bureau
RULES
Export administration regulations:
Commerce Control List—
Australia Group understandings and intersessional decision; clarifications, corrections, and Chemical Weapons Convention membership additions; correction, 2348–2350

Interior Department
See Indian Affairs Bureau
See Land Management Bureau

Internal Revenue Service
NOTICES
Meetings:
Taxpayer Advocacy Panels, 2465
Privacy Act:
Systems of records, 2465–2466

International Trade Administration
NOTICES
North American Free Trade Agreement (NAFTA); binational panel reviews:
Carbon and alloy steel wire rod from—
Canada; correction, 2390

International Trade Commission
NOTICES
Import investigations:
Potassium permanganate from—
China, 2428
U.S.-Central America Free Trade Agreement; potential economywide and selected sectoral effects; investigation terminated, 2429

Land Management Bureau
NOTICES
Meetings:
McInnis Canyons National Conservation Area Advisory Council, 2425
Pinedale Anticline Working Group task groups, 2425–2426
Resource Advisory Councils—
Southeast Oregon, 2426
Oil and gas leases:
Wyoming, 2426–2427
Recreation management restrictions, etc.:
La Paz County, AZ; temporary closure of selected public lands during operation of Parker 425 Desert Race, 2427–2428

Maritime Administration
NOTICES
Agency information collection activities; proposals, submissions, and approvals, 2457

National Highway Traffic Safety Administration
NOTICES
Grants and cooperative agreements; availability, etc.:
Crash Injury Research and Engineering Network; Level One Trauma Centers; responses to questions, 2457–2462
Motor vehicle safety standards; exemption petitions, etc.:
Morgan Motor Co. Ltd., 2462–2464

National Oceanic and Atmospheric Administration
RULES
Marine mammals:
Commercial fishing authorizations—
Atlantic Large Whale Take Reduction Plan, 2367–2369
NOTICES
Endangered and threatened species:
Andromous fish take—
Washington County, OR; Routine Road Maintenance Program; availability, 2390–2391
Meetings:
Gray's Reef National Marine Sanctuary Advisory Council, 2391–2392
Marine Protected Areas Federal Advisory Committee, 2392
Mid-Atlantic Fishery Management Council; correction, 2392
New England Fishery Management Council, 2392–2393
Western Pacific Fishery Management Council, 2393–2394
Permits:
Marine mammals, 2394–2395
Scientific research, 2395

National Science Foundation
NOTICES
Meetings; Sunshine Act, 2429

Nuclear Regulatory Commission
NOTICES
Applications, hearings, determinations, etc.:
Louisiana Energy Services, L.P., 2429–2430
Safety Light Corp., 2430–2431

Research and Special Programs Administration
RULES
Hazardous materials:
Transportation—
Primary lithium batteries and cells; prohibition aboard passenger aircraft; public meeting, 2367

Securities and Exchange Commission
NOTICES
Options Price Reporting Authority:
Consolidated Options Last Sale Reports and Quotation Information; Reporting Plan; amendments, 2432
Self-regulatory organizations; proposed rule changes:
American Stock Exchange LLC, 2432–2435
American Stock Exchange LLC; correction, 2467
Boston Stock Exchange, Inc.; correction, 2467
Chicago Board Options Exchange, Inc., 2435–2439
International Securities Exchange LLC, 2439–2440
National Association of Securities Dealers, Inc., 2440–2441
Options Clearing Corp., 2442
Pacific Exchange, Inc., 2443–2444
Philadelphia Stock Exchange, Inc., 2444–2447
Applications, hearings, determinations, etc.:
Premier Farnell Plc, 2431

Social Security Administration
NOTICES
Social Security Protection Act; implementation:
Direct payment to non-attorney representatives; demonstration project, 2447–2450

State Department
NOTICES
Art objects; importation for exhibition:
Kingdom of Siam: Art of Central Thailand (1350-1800), 2450
Meetings:
International Telecommunication Advisory Committee, 2450
Shipping Coordinating Committee, 2450–2451

Surface Transportation Board
NOTICES
Motor carriers:
Control applications—
Pacific Coast Sightseeing Tours & Charters, 2464–2465

Transportation Department
See Federal Aviation Administration

See Federal Motor Carrier Safety Administration
See Federal Railroad Administration
See Maritime Administration
See National Highway Traffic Safety Administration
See Research and Special Programs Administration
See Surface Transportation Board
PROPOSED RULES
Aviation economic regulations:
Print advertisements of scheduled passenger services; code-sharing arrangements and long-term wet leases; disclosure, 2372–2375

Transportation Security Administration
RULES
Maritime and land transportation security:
Hazardous materials drivers; security threat assessments; fees, 2541–2560

Treasury Department
See Internal Revenue Service

Separate Parts In This Issue

Part II
Consumer Product Safety Commission, 2469–2517

Part III
Agriculture Department, Agricultural Marketing Service, 2519–2540

Part IV
Homeland Security Department, Transportation Security Administration, 2541–2560

Reader Aids

Consult the Reader Aids section at the end of this issue for phone numbers, online resources, finding aids, reminders, and notice of recently enacted public laws.

To subscribe to the Federal Register Table of Contents LISTSERV electronic mailing list, go to http://listserv.access.gpo.gov and select Online mailing list archives, FEDREGTOC-L, Join or leave the list (or change settings); then follow the instructions.

CFR PARTS AFFECTED IN THIS ISSUE

A cumulative list of the parts affected this month can be found in the Reader Aids section at the end of this issue.

7 CFR

Proposed Rules:

927 2520

14 CFR

21 2325
25 2325
39 (4 documents) ...2330, 2333, 2336, 2339
71 (7 documents) ...2342, 2343, 2344, 2345, 2346, 2347, 2348

Proposed Rules:

39 2370
257 2372

15 CFR

742 2348
774 2348

16 CFR

Proposed Rules:

1633 2470
1634 2514

17 CFR

171 2350

21 CFR

510 2352
520 2352

33 CFR

110 2353
117 2355
165 (2 documents) 2355, 2357

40 CFR

52 2358

47 CFR

64 2360

48 CFR

206 2361
225 2361
252 2361

49 CFR

171 2367
172 2367
173 2367
175 2367
1572 2542

50 CFR

229 2367

Rules and Regulations

Federal Register

Vol. 70, No. 9

Thursday, January 13, 2005

This section of the FEDERAL REGISTER contains regulatory documents having general applicability and legal effect, most of which are keyed to and codified in the Code of Federal Regulations, which is published under 50 titles pursuant to 44 U.S.C. 1510.

The Code of Federal Regulations is sold by the Superintendent of Documents. Prices of new books are listed in the first FEDERAL REGISTER issue of each week.

DEPARTMENT OF TRANSPORTATION

Federal Aviation Administration

14 CFR Part 21

Certification Procedures for Products and Parts: Type Certificates; Issue of Type Certificate: Surplus Aircraft of the Armed Forces; Correction

AGENCY: Federal Aviation Administration (FAA), DOT.

ACTION: Correcting amendment.

SUMMARY: This document corrects an error that appears in the Code of Federal Regulations (CFR), title 14, as of January 1, 2004. The regulation relates to type certification of large reciprocating-engine powered airplanes that are surplus from the Armed Forces of the United States.

DATES: Effective on January 13, 2005.

FOR FURTHER INFORMATION CONTACT: Brian Yanez, phone (202) 267–5864.

SUPPLEMENTARY INFORMATION:

Need for Correction

As published in the CFR, this regulation contains an error in which the date ''Aug. 25, 1959'' was incorrectly substituted for the date ''Aug. 25, 1955''.

List of Subjects in 14 CFR Part 21, Subpart B

Type certificates.

■ Accordingly, 14 CFR part 21 is corrected by making the following correcting amendments:

PART 21—CERTIFICATION PROCEDURES FOR PRODUCTS AND PARTS

■ (1) The authority citation for part 21 continues to read as follows:

Authority: 42 U.S.C. 7572; 49 U.S.C. 106(g), 40105, 40113, 44701–44702, 44707, 44709, 44711, 44713, 44715, 45303.

■ (2) In § 21.27, amend paragraph (f) by revising the dates in the table for the entry ''Large reciprocating-engine powered airplanes'' to read as follows:

§ 21.27 Issue of type certificate: surplus aircraft of the Armed Forces.

* * * * *

(b) * * *

* * *

Large reciprocating-engine powered airplanes: Before Aug. 26, 1955. After Aug. 25, 1955.

* * * * *

Issued in Washington, DC, on January 7, 2005.

Anthony F. Fazio,

Director, Office of Rulemaking.

[FR Doc. 05–754 Filed 1–12–05; 8:45 am]

BILLING CODE 4910–13–P

DEPARTMENT OF TRANSPORTATION

Federal Aviation Administration

14 CFR Part 25

[Docket No. NM299; Special Conditions No. 25–283–SC]

Special Conditions: Boeing Model 767–300 Airplane; Forward Lower Deck Service/Cargo Compartment

AGENCY: Federal Aviation Administration (FAA), DOT.

ACTION: Final special conditions; request for comments.

SUMMARY: These special conditions are issued for a Boeing Model 767–300 airplane modified by Jet Aviation Engineering Services (JAES), Spring Branch, Texas. This modified airplane will have a novel or unusual design feature when compared to the state of technology envisioned in the airworthiness standards for transport category airplanes. The modification is associated with a forward lower deck compartment that will serve as both a service compartment and a Class C cargo compartment. The applicable airworthiness regulations do not contain adequate or appropriate safety standards for this design feature. These special conditions contain the additional safety standards that the Administrator considers necessary to establish a level of safety equivalent to that established by the existing airworthiness standards.

DATES: The effective date of these special conditions is February 14, 2005.

Comments must be received on or before February 28, 2005.

ADDRESSES: Comments on these special conditions may be mailed in duplicate to: Federal Aviation Administration, Transport Airplane Directorate, Attention: Rules Docket (ANM–113), Docket No. NM299, 1601 Lind Avenue SW., Renton, Washington 98055–4056; or delivered in duplicate to the Transport Airplane Directorate at the above address. All comments must be marked: Docket No. NM299.

FOR FURTHER INFORMATION CONTACT: Gerald Lakin, FAA, Standardization, ANM–113, Transport Airplane Directorate, 1601 Lind Avenue SW., Renton, Washington, 98055–4056; telephone (425) 227–1187; facsimile (425) 227–1149.

SUPPLEMENTARY INFORMATION: The FAA has determined that notice and opportunity for prior public comment hereon are impracticable, because those procedures would significantly delay issuance of the approval design and thus delivery of the affected aircraft. The FAA, therefore, finds that good cause exists for making these special conditions effective upon issuance.

Comments Invited

Interested persons are invited to submit such written data, views, or arguments as they may desire. Comments should identify the rules docket number and be submitted in duplicate to the address specified above. The Administrator will consider all comments received on or before the closing date for comments. The special conditions may be changed in light of the comments received. All comments received will be available in the Rules Docket for examination by interested persons, both before and after the closing date for comments. A report summarizing each substantive public contact with FAA personnel concerning this rulemaking will be filed in the docket. Persons wishing the FAA to acknowledge receipt of their comments submitted in response to these special conditions must include with those comments a self-addressed postcard on which the following statement is made: ''Comments to Docket No. NM299. The postcard will be date stamped and returned to the commenter.

Background

On December 4, 2003, Jet Aviation Engineering Services (JAES) applied for a supplemental type certificate that would allow modification of a Boeing Model 767–300 airplane interior to an executive jet interior configuration. Boeing Model 767–300 series airplanes, currently approved under Type Certificate A1NM, are large transport category airplanes with a main passenger deck limited to 290 passengers or fewer, depending on the interior configuration. As part of the type design, certified Class C cargo compartments are installed below the main deck.

Jet Aviation Engineering Services proposes to include as part of the interior STC modification, access to the forward lower deck Class C cargo compartment and to convert that compartment for use as a combined service compartment and Class C cargo compartment (service/cargo compartment). Access will be provided by two hatches installed in the cabin floor, a primary hatch in the galley and a secondary hatch located in the crew rest area. A ladder will be installed at each hatch to provide access from the hatch to the forward lower deck service compartment floor.

Access would be limited to one trained crewmember and would be allowed during level flight, but would not be allowed during taxi, takeoff and landing or during a fire.

As part of the safety enhancement necessary to allow occupancy of the forward lower deck service/cargo compartment by a crewmember, JAES proposes the installation of warning and emergency equipment, as defined for a lower lobe service compartment in 14 CFR 25.819. Speakers, warning lights, and buzzers will be installed in the forward lower deck service/cargo compartment to warn an occupant of turbulent conditions, the presence of smoke or fire, or the need to leave the area. A crew interphone will be provided for communications with the flightdeck.

Jet Aviation Engineering Services indicates that the forward lower deck service/cargo compartment will meet the Class C cargo requirements of §§ 25.855 and 25.857. The compartment will be built using materials meeting the flammability standards for Class C cargo compartments and will have a smoke detection system. The compartment will be equipped with an approved built-in fire suppression system, which is controllable from the cockpit to eliminate the need to send someone into the compartment to fight a fire. In the event of a fire, the forward lower deck service/cargo compartment will be evacuated, and the pilot will activate the built-in fire suppression system. A means will be provided to prevent inadvertent access to the compartment when the fire suppression system has been activated.

Current regulations specify the requirements for a forward lower deck service compartment (§ 25.819) and a Class C cargo compartment (§§ 25.855 and 25.857) but the regulations did not envision a dual-purpose compartment. Currently, § 25.819 specifies that a service compartment may be occupied and does not need to be evacuated under certain normal conditions or under certain unsafe conditions (*e.g.*, in the case of fire, the occupant could function as a firefighter). The fire control system of a service compartment, however, would not utilize a flood-type fire suppressant, since the compartment might be occupied. Section 25.857, however, specifies that a Class C cargo compartment have a fire detection system and a built-in fire suppression system, *i.e.*, a total flood system. The applicant intends to use the compartment as a dual-purpose service/cargo compartment and intends for the operator to use the built-in systems to fight fires in every instance.

The concept of a multi-use compartment, which JAES proposes, would be acceptable if the FAA could be assured that whether the compartment is used as a service compartment or as a Class C cargo compartment, the level of safety would be equivalent to that of a separate service compartment or a separate Class C cargo compartment. Therefore, special conditions that provide an equivalent level of safety are being required. These special conditions pertain to visible and audible warnings, placards and limitations, equipment, evacuation routes, training, and the use of ladders between the main deck and the forward lower deck service/cargo compartment.

Type Certification Basis

Under the provisions of 14 CFR 21.101, Jet Aviation Engineering Services must show that the Boeing Model 767–300 airplane, as modified, continues to meet the applicable provisions of the regulations incorporated by reference in Type Certificate A1NM or the applicable regulations in effect on the date of application for the change.

The regulations incorporated by reference in the type certificate are commonly referred to as the ''original type certification basis.'' The regulations incorporated by reference in Type Certificate A1NM for the Boeing Model 767–300 series airplanes include 14 CFR part 25, as amended by Amendments 25–1 through 25–37 with certain additions and special conditions as listed in the type certificate data sheet. The U.S. type certification basis for the Boeing Model 767–300 series airplane is established in accordance with §§ 21.17 and 21.21 and the type certification application date.

The type certification basis listed in Type Certificate Data Sheet No. A1NM, for the Boeing Model 767–300 does not include § 25.819, which was introduced in Amendment 25–53. In this case, § 25.819 does provide appropriate safety standards for that portion of this STC's design considered a service compartment. Therefore, in lieu of applying the requirements of § 25.819 as a special condition, § 25.819 (Amendment 25–110) will be added as a requirement to this STC's certification basis.

If the Administrator finds that the applicable airworthiness regulations (*i.e.*, 14 CFR part 25) do not contain adequate or appropriate safety standards for a Boeing Model 767–300 series airplane because of a novel or unusual design feature, special conditions are prescribed under the provisions of § 21.16.

In addition to the applicable airworthiness regulations and special conditions, the Boeing Model 767–300 must comply with the fuel vent and exhaust emission requirements of 14 CFR part 34 and the noise certification requirements of 14 CFR part 36.

Special conditions, as defined in 14 CFR 11.19, are issued in accordance with § 11.38 and become part of the type certification basis in accordance with § 21.101.

Special conditions are initially applicable to the model for which they are issued. Should the applicant apply for a supplemental type certificate to modify any other model included on the same type certificate to incorporate the same novel or unusual design feature, the special conditions would also apply to the other model under the provisions of § 21.101.

Novel or Unusual Design Features

The Boeing Model 767–300 airplane will incorporate a novel or unusual design feature; specifically, the forward lower deck compartment will be used as a combined service compartment and Class C cargo compartment.

Discussion

To allow the use of a dual-purposed service/cargo compartment, these

special conditions require certain visible and audible warnings, placards and limitations, equipment, and training. The applicant has not proposed a means of satisfying regulatory requirements governing occupancy of the forward lower deck service/cargo compartment during taxi, takeoff, and landing. Therefore, the FAA will specify appropriate limitations for such occupancy. A discussion of each specific special condition follows but is limited where the specific special condition is self-explanatory:

Special Condition 1—Visible and Audible Warnings

To maintain the advantages of both a service compartment and a Class C cargo compartment, certain warnings need to be provided.

Special Condition 1a requires a visible advisory in the cockpit to notify the flightcrew when the forward lower deck service/cargo compartment is occupied. The potential exists that the forward lower deck service/cargo compartment may inadvertently be occupied when it should not be, such as during taxi, takeoff or landing or during certain emergencies. Special Condition 1a also ensures that the flightcrew is aware that the forward lower deck service/cargo compartment is occupied in order that the flightcrew can take appropriate action to evacuate the compartment before flooding it with fire suppressant. There must be a placard or sign adjacent to the warning light which indicates that the light means that the compartment is occupied.

Special Condition 1b requires an ''on/off'' visible warning placard stating ''Do Not Enter'' (or similar words) placard to be located on or near each hatch. The location should be on the main deck side of the hatch. The warning is to be controlled from the flightdeck to prevent someone from entering the forward lower deck service/cargo compartment when it should not be occupied; such as during taxi, takeoff or landing, or when smoke or fire has been detected. Opening the door during a fire would degrade the effectiveness of the fire suppressant and allow smoke, flame, and/or fire suppressant into the cabin.

Special Condition 1c requires a visible and audible warning in the forward lower deck service/cargo compartment to notify an occupant that he or she must leave the compartment. This warning must be one which can be seen and heard from any part of the compartment. The visible and audible warning is to be controlled from the flightdeck. Because the forward lower deck service/cargo compartment may be occupied on the ground or in the air, a warning must be provided to notify an occupant to leave the compartment prior to taxi, takeoff or landing or during certain emergencies (other than fire, which is dealt with under Special Condition 1e). A visible warning is required, in case the audible warning becomes masked or distorted by engine, equipment, or ground noises.

Special condition 1d requires a visible and audible warning in the forward lower deck service/cargo compartment to notify an occupant of the need to use a portable oxygen bottle in the event of decompression. This warning must be one which can be seen and heard from any part of the compartment and must be distinct from other warnings in the compartment to prevent confusion and to elicit correct action. The decompression warning must be automatic (*i.e.*, not require separate crew action) to ensure that an occupant of the forward lower deck service/cargo compartment does not delay putting on the mask attached to the portable oxygen bottle. This section of the special conditions is partially in lieu of the visible effect provided by the automatic presentation feature required by § 25.1447.

Special Condition 1e requires a visible and audible warning in the forward lower deck service/cargo compartment when a fire is detected to notify an occupant that he or she must evacuate the compartment. The warning must be one which can be seen and heard from any part of the compartment and must be distinct from other warnings in the compartment in order to prevent confusion and to elicit the correct actions. The fire or smoke detection warning must be automatic (*i.e.*, not require or depend on separate crew action) to ensure that an occupant of the forward lower deck service/cargo compartment leaves before the flightdeck crew releases fire suppressant in the compartment.

Special Condition 2—Placards and Limitations

The forward lower deck service/cargo compartment must be evacuated if a fire occurs. In addition, there must be a way to prevent access into the compartment during taxi, takeoff or landing or in the event of a fire. Placards and limitations are specified for these situations.

Special Condition 2a requires a placard to be located outside each hatch to the forward lower deck service/cargo compartment, indicating that access is limited to one crewmember trained in evacuation procedures.

Special Condition 2b requires placards to be located inside and outside each hatch of the forward lower deck service/cargo compartment, indicating that the compartment hatch must remain closed, except when someone is entering or leaving the compartment. The hatches should remain closed except for entering or leaving the compartment so as to not degrade the fire detection and suppression systems, which are tested and certified with the compartment hatches closed. Further, with this limitation there is less chance someone will accidentally step through an open hatch.

Special Condition 2c requires a limitation to be placed in the airplane flight manual (AFM) and placards to be posted inside and outside the hatches of the forward lower deck service/cargo compartment, all stating that (1) the compartment may not be occupied during taxi, takeoff, or landing or during a fire and (2) only authorized personnel are permitted access. These placards are being required, because the compartment is not being certified for occupancy during taxi, takeoff, or landing and because the compartment must not be occupied during a fire so that an occupant is not exposed to fire or to fire suppressant. These placards are somewhat redundant, given the warning required under Special Conditions 1b and 1c but would provide information to an occupant, if the flightcrew failed to activate the warnings of Special Conditions 1b and 1c.

Special Condition 2d requires in the AFM (or AFM supplement) instructions for the flightcrew to follow regarding—

(1) Permissible access and occupancy;

(2) The need to exit (or evacuate in the event of an incapacitated person) and discharge (flood) extinguishing agent in the compartment; and

(3) The need, after decompression warning, to immediately don the oxygen mask and exit the compartment.

These requirements are to ensure that a single member of the crew could access the cargo compartment safely during flight and exit safely during failure conditions.

Special Condition 2e. Because access is being provided to the forward lower deck service/cargo compartment, there is concern that during flight, passengers may retrieve hazardous materials or weapons stored in luggage. Access could be prevented by locking the forward lower deck service/cargo compartment, and that is being specified as one solution (in Special Condition 2e(1)). However, this airplane is being designed for use by a head-of-state, it will have limited access, and it will have placards limiting access.

Furthermore, there will be notification to the flightcrew when the forward lower deck service/cargo compartment is occupied (in Special Condition 1a). Special Condition 2e(2), therefore, would prohibit the airplane from being operated for hire or offered for common carriage.

Special Condition 3—Equipment

In addition to that required by § 25.819, Special Condition 3 requires the following equipment:

Special Condition 3a requires that two portable oxygen bottles be readily available at all times and that each be sufficient to supply a member of the crew who is occupying the forward lower deck service/cargo compartment (except during taxi, takeoff, or landing, or during a fire). The supply of oxygen must be compatible with the emergency descent profile following a decompression. Because it would not be advisable to provide drop-down masks in a cargo compartment or to store a portable oxygen bottle in the compartment, the FAA is requiring that a portable oxygen bottles be mounted outside and near the main deck entrance of the forward lower deck service/cargo compartment. A member of the crew must carry the portable oxygen bottle, when he or she enters the compartment. The second bottle is for a second crewmember's use who must evacuate an incapacitated crewmember.

Special Condition 3b requires supplemental handheld lighting (with locator light) when an occupant enters the forward lower deck service/cargo compartment and any of the following three conditions exist: (1) Power to the compartment is off, (2) the emergency escape path lighting is off or lost, or (3) visibility is poor. At least two flashlights are required. One flashlight would be located adjacent to each emergency exit in the forward lower deck service/cargo compartment at the foot of the stairs in the compartment. Note that this requirement is in addition to the automatic emergency lighting system required by § 25.819(a).

Special Condition 4—Evacuation Routes

To allow the forward lower deck service/cargo compartment to be utilized as a service compartment, Special Condition 4 requires a limitation to keep the two evacuation routes required under § 25.819(a) clear for evacuation. The cargo in the compartment must be restrained to ensure that the crewmember's paths to the exits are clear. Further, all entrances and exits (hatches) from the forward lower deck service/cargo compartment must be capable of being opened and closed, without obstruction. This allows exiting under emergency conditions. Further, the hatches must be able to be closed to maintain the integrity of the compartment with respect to fire detection and with respect to smoke, fire and extinguishing agent containment requirements applicable to the Class C cargo compartment, including §§ 25.855, 25.857, and 25.858. Also see Special Condition 2b.

Special Condition 5—Training

Because the design features required by these special conditions can fulfill their safety objectives only if crewmembers are properly trained in their use, these special conditions require the applicant to develop the following training materials:

Special Condition 5a requires training materials about use of the forward lower deck service/cargo compartment and actions associated with the warnings and placards required by these special conditions.

Special Condition 5b requires training materials about entering and exiting the forward lower deck service/cargo compartment, including emergency exiting, (associated with Special Conditions 1b, 1c, 1d, 1e, 2a, 2b, 2c, 2d, and 3a).

Special Condition 5c requires training materials about checking the pressure of the portable oxygen bottle prior to entering the forward lower deck service/cargo compartment (associated with Special Condition 3a).

Special Condition 5d requires training materials about carrying a portable oxygen bottle when entering the forward lower deck service/cargo compartment (associated with Special Condition 3a).

Special Condition 5e requires training materials about maintaining an exit aisle and access to the evacuation routes from the lower lobe service/cargo compartment (associated with Special Condition 2f and 4).

Special Condition 5f requires a limitation in the AFM (or AFM supplement) stating all personnel accessing the forward lower deck service/cargo compartment must be trained in the procedures specified above. Special Condition 5f also states there should be at least two crewmembers (not the pilot or co-pilot) trained in emergency evacuation procedures. The second person is to aid the evacuation of an incapacitated crewmember should that occur.

Special Condition 6—Ladders

The ladders between the forward lower deck service/cargo compartment and the main deck must meet the following requirements:

Special Condition 6a requires that each ladder consist of a single segment (to minimize potential errors of use).

Special Condition 6b requires that the ladders have essentially rectangular treads (to reduce the potential to slip).

Special Condition 6c requires that general illumination of at least 0.05 foot-candle, when measured along the centerlines of each tread, be provided, when the ladders are to be used (to facilitate evacuation and reduce miss-steps).

Applicability

As discussed above, these special conditions are applicable to the Boeing Model 767–300 airplane. Should JAES apply at a later date for a supplemental type certificate to modify any other model included on Type Certificate A1NM to incorporate the same novel or unusual design feature, the special conditions would apply to that model as well under the provisions of § 21.101.

Conclusion

This action affects only certain novel or unusual design features on one model of airplane. It is not a rule of general applicability, and it affects only the applicant which applied to the FAA for approval of these features on the airplane.

Under standard practice, the effective date of final special conditions would be 30 days after the date of publication in the **Federal Register**. However, as the certification date for the Boeing Model 767–300, as modified by JAES, is imminent, the FAA finds, that good cause exists to make these special conditions effective upon issuance.

List of Subjects in 14 CFR Part 25

Aircraft, Aviation safety, Reporting and recordkeeping requirements.

■ The authority citation for these special conditions is as follows:

Authority: 49 U.S.C. 106(g), 40113, 44701, 44702, 44704.

The Special Conditions

■ Accordingly, pursuant to the authority delegated to me by the Administrator, the following special conditions are issued as part of the type certification basis for the Boeing Model 767–300 airplane, modified by Jet Aviation Engineering Services, to include a forward lower deck compartment configured for use as both a service compartment and a Class C cargo compartment.

1. Visible and Audible Warnings

In addition to the audible warnings (fire/smoke detection and

decompression) required by § 25.819(c), the following warnings are required:

a. A visible advisory in the cockpit to notify the flightcrew when the forward lower deck service/cargo compartment is occupied. The advisory light must be accompanied by a placard or message indicating that the compartment is occupied.

b. A (on/off) visible warning placard stating ''Do Not Enter'' (or similar words) to be located on or near each hatch. The location should be on the main deck side of the hatch. The warning is to be controlled from the flightdeck.

c. A visible and audible warning in the forward lower deck service/cargo compartment to notify an occupant when he or she must evacuate the compartment. The warning must be one which can be seen and heard from any part of the compartment. The warning is to be controlled from the flightdeck.

d. A visible and audible warning in the forward lower deck service/cargo compartment, which in the event of decompression, warns an occupant of the need to use a portable oxygen bottle. This warning must be one which can be seen and heard from any part of the compartment and must be distinct from other warnings in the compartment. The decompression warning must be automatic (*i.e.*, not require separate crew action), to ensure that an occupant of the forward lower deck service/cargo compartment does not delay using a portable oxygen bottle. This section of the special conditions is partially in lieu of the visible effect provided by the automatic presentation feature required by § 25.1447.

e. A visible and audible warning in the forward lower deck service/cargo compartment, which in the event of a fire, warns an occupant of the need to evacuate the compartment. This warning must be one which can be seen and heard from any part of the compartment and should be distinct from other warnings in the compartment. The fire or smoke detection warning must be automatic (*i.e.*, not require a separate crew action) to ensure that an occupant of the forward lower deck service/cargo compartment leaves before the flightdeck crew releases fire suppressant.

2. Placards and Limitations

In addition to those required in part 25, the following placards and limitations are required:

a. A placard located outside each hatch to the forward lower deck service/cargo compartment, indicating that access to the compartment is limited to one crewmember trained in evacuation procedures.

b. A placard located inside and outside each hatch to the forward lower deck service/cargo compartment, indicating that the compartment hatches must remain closed, except when someone is entering or leaving the compartment.

c. A limitation in the AFM and a placard located inside and outside each hatch to the forward lower deck service/cargo compartment, all stating that (1) the forward lower deck service/cargo compartment must not be occupied during taxi, takeoff, or landing or during a fire, and (2) only authorized personnel are permitted access.

d. Instructions in the AFM (or AFM supplement) for the flightcrew to follow regarding—

(1) Permissible access and occupancy of the forward lower deck service/cargo compartment;

(2) The need to exit (or evacuate in the event of an incapacitated person) and discharge (flood) extinguishing agent in the compartment; and

(3) The need, after decompression warning, to immediately don the oxygen mask and exit the compartment.

e. A Limitation in the AFM supplement stating that:

''Carriage of hazardous material and/or weapons in the forward lower deck service/cargo compartment is prohibited unless the following conditions are met:

(1) The forward lower deck service compartment is locked during flight, and the key remains with the flightcrew, or

(2) The airplane is not operated for hire or offered for common carriage. This provision does not preclude the operator from receiving remuneration to the extent consistent with 14 CFR part 125, and 14 CFR part 91, and subpart F, as applicable.''

3. Equipment

In addition to that required by §§ 25.819, the following equipment is required:

a. Two portable oxygen bottles with masks must be readily available outside and near the primary main deck entrance (hatch) of the forward lower deck service/cargo compartment. Either portable oxygen bottle must be sufficient to supply a member of the crew who is occupying the forward lower deck service/cargo compartment and a bottle with mask attached must be carried by the crewmember when in the compartment. The second bottle is for the crewmember's use who must evacuate an incapacitated crewmember.

b. Flashlights or other supplemental handheld lighting, in addition to the emergency illumination required by § 25.819(a). At least two flashlights, each equipped with a locator light, must be provided. A flashlight must be located adjacent to each emergency exit (hatch) at the foot of the ladder in the forward lower deck service/cargo compartment.

4. Evacuation Routes

A limitation must be placed in the AFM (or AFM supplement) stating that:

When the forward lower deck service/cargo compartment is operated as a service compartment, the two evacuation routes must be kept clear, the special storage pallets/containers must be installed, no loose storage is permitted, and all items stored in the compartment must be stored in appropriate pallets/containers (or similar words).

Similar loading restrictions should be placed in the weight and balance manual.

5. Training

Training manuals must be provided for authorized crewmembers that may enter the forward lower deck service/cargo compartment and the manuals and training shall include:

a. Use of the forward lower deck service/service compartment and actions indicated by the warnings and placards specified herein.

b. Entering and exiting the forward lower deck service/cargo compartment, including emergency exiting.

c. Checking the pressure of the portable oxygen bottle prior to entering the forward lower deck service/cargo compartment.

d. Carrying a portable oxygen bottle when entering the forward lower deck service/ cargo compartment.

e. Maintaining an exit aisle and access to evacuation routes from the forward lower deck service/cargo compartment. Training must address how to keep the evacuation routes clear, *i.e.*, how to restrain cargo in the compartment to ensure that the paths to the exits (hatches) are clear.

f. A limitation in the AFM supplement stating that all personnel accessing the forward lower deck service/cargo compartment must be trained in the procedures listed above. To facilitate the evacuation of an incapacitated person, there should be at least two crewmembers (not the pilot or co-pilot) trained in the emergency procedures for the forward lower deck service/cargo compartment.

6. Ladders

The following requirements must be met for ladders installed between the

main deck and the forward lower deck service/cargo compartment:

a. Each ladder must consist of a single segment.

b. The ladders must have essentially rectangular treads.

c. General illumination of at least 0.05 foot-candle, when measured along the centerlines of each ladder tread, must be provided when the ladders are to be used.

Issued in Renton, Washington, on January 5, 2005.

Ali Bahrami,

Manager, Transport Airplane Directorate, Aircraft Certification Service.

[FR Doc. 05–660 Filed 1–12–05; 8:45 am]

BILLING CODE 4910–13–P

DEPARTMENT OF TRANSPORTATION

Federal Aviation Administration

14 CFR Part 39

[Docket No. FAA–2005–20009; Directorate Identifier 2003–NM–220–AD; Amendment 39–13937; AD 94–01–10 R2]

RIN 2120–AA64

Airworthiness Directives; Boeing Model 757–200 and –200PF Series Airplanes

AGENCY: Federal Aviation Administration (FAA), DOT.

ACTION: Final rule; request for comments.

SUMMARY: The FAA is revising an existing airworthiness directive (AD) for certain Boeing Model 757–200 and –200PF series airplanes. That AD currently requires inspections, adjustments, and functional checks of the engine thrust reverser system; and modification of the engine thrust reverser directional control valve. That AD also requires installation of an additional thrust reverser locking feature and periodic functional tests of the locking feature following installation. This new AD retains the requirements of the existing AD, but removes certain tests and inspections for certain airplanes. This AD is prompted by a determination of an error in the existing AD. We are issuing this AD to prevent deployment of a thrust reverser in flight and subsequent reduced controllability of the airplane.

DATES: Effective January 28, 2005.

The incorporation by reference of certain publications, as listed in the regulations, was approved by the Director of the Federal Register as of March 3, 1994 (59 FR 4558, February 1, 1994).

The incorporation by reference of certain other publications, as listed in the regulations, was approved previously by the Director of the Federal Register as of September 16, 1991 (56 FR 46725, September 16, 1991).

We must receive comments on this AD by March 14, 2005.

ADDRESSES: Use one of the following addresses to submit comments on this AD.

- DOT Docket Web site: Go to *http://dms.dot.gov* and follow the instructions for sending your comments electronically.
- Government-wide rulemaking Web site: Go to *http://www.regulations.gov* and follow the instructions for sending your comments electronically.
- Mail: Docket Management Facility; U.S. Department of Transportation, 400 Seventh Street SW., Nassif Building, Room PL–401, Washington, DC 20590.
- Fax: (202) 493–2251.
- Hand Delivery: Room PL–401 on the plaza level of the Nassif Building, 400 Seventh Street SW., Washington, DC, between 9 a.m. and 5 p.m., Monday through Friday, except Federal holidays.

For service information identified in this AD, contact Boeing Commercial Airplanes, P.O. Box 3707, Seattle, Washington 98124–2207. You can examine this information at the National Archives and Records Administration (NARA). For information on the availability of this material at NARA, call (202) 741–6030, or go to *http://www.archives.gov/federal_register/code_of_federal_regulations/ibr_locations.html.*

You can examine the contents of this AD docket on the Internet at *http://dms.dot.gov,* or in person at the Docket Management Facility, U.S. Department of Transportation, 400 Seventh Street SW., room PL–401, on the plaza level of the Nassif Building, Washington, DC. This docket number is FAA–2005–20009; the directorate identifier for this docket is 2003–NM–220–AD.

Examining the Docket

You can examine the AD docket on the Internet at *http://dms.dot.gov,* or in person at the Docket Management Facility office between 9 a.m. and 5 p.m., Monday through Friday, except Federal holidays. The Docket Management Facility office (telephone (800) 647–5227) is located on the plaza level of the Nassif Building at the DOT street address stated in the **ADDRESSES** section. Comments will be available in the AD docket shortly after the DMS receives them.

FOR FURTHER INFORMATION CONTACT: Thomas S. Thorson, Aerospace Engineer, Propulsion Branch, ANM–140S, FAA, Seattle Aircraft Certification Office, 1601 Lind Avenue, SW., Renton, Washington 98055–4056; telephone (425) 917–6508; fax (425) 917–6590.

SUPPLEMENTARY INFORMATION: On August 7, 2003, we issued AD 94–01–10 R1, amendment 39–13247 (68 FR 48546, August 14, 2003). That AD applies to certain Boeing Model 757–200 and –200PF series airplanes. That AD requires inspections, adjustments, and functional checks of the engine thrust reverser system; and modification of the engine thrust reverser directional control valve. That AD also requires installation of an additional thrust reverser locking feature and periodic functional tests of the locking feature following installation. That AD was prompted by a determination that the applicability of AD 94–01–10, amendment 39–8792 (59 FR 4558, February 1, 1994), should be limited to Boeing Model 757–200 and –200PF series airplanes equipped with Pratt and Whitney PW2000 series engines. The actions specified in the AD are intended to prevent deployment of a thrust reverser in flight and subsequent reduced controllability of the airplane.

Actions Since AD Was Issued

We have since determined that paragraph (c) of AD 94–01–10 R1 should be revised to apply only to airplanes with line numbers 441 and lower. That AD applies to Boeing Model 757 series airplanes with Pratt & Whitney PW2000 series engines. The airplanes in that AD are divided into two groups:

- Airplanes without a thrust reverser sync lock (airplane line numbers 1 through 441 inclusive); and
- Airplanes with changes to the sync lock installation done in production (airplane line numbers 442 and subsequent).

When we issued that AD, we made changes as a result of comments we received. One of the changes was to change paragraph (d) to apply only to airplanes without a thrust reverser sync lock installed in production. The action in paragraph (d) (installing the thrust reverser sync lock) is terminating action for paragraphs (a) through (c). We intended for the repetitive tests and inspections in paragraph (c) to apply only to airplanes without a thrust reverser sync lock installed during production. Unlike paragraph (d), however, paragraph (c) of that AD incorrectly applies to all line numbers of airplanes, including those with changes to the sync lock installation done in production.

Therefore, we have changed paragraph (c) of this final rule to clarify

that the paragraph applies to all airplanes affected by paragraph (d). For the same reasons, we have changed paragraph (e) to clarify that its requirements apply to all airplanes. We have also changed the paragraph identifiers in this final rule to the new identifiers that are discussed under ''Changes to the Existing AD.''

FAA's Determination and Requirements of This AD

The unsafe condition described previously is likely to exist or develop on other airplanes of the same type design that may be registered in the U.S. at some time in the future. For this reason, we are issuing this AD to revise AD 94–01–10 R1. This new AD retains the requirements of AD 94–01–10 R1 but removes certain test and inspection requirements for certain airplanes.

Changes to the Existing AD

This AD retains certain requirements of AD 94–01–10 R1. Since that AD was issued, the AD format has been revised, and certain paragraphs have been rearranged. As a result, the corresponding paragraph identifiers have changed in this AD, as listed in the following table:

REVISED PARAGRAPH IDENTIFIERS

Requirement in AD 94–01–10 R1	Corresponding requirement in this new AD
Paragraph (a)	Paragraph (f).
Paragraph (b)	Paragraph (g).
Paragraph (c)	Paragraph (h).
Paragraph (d)	Paragraph (i).
Paragraph (e)	Paragraph (j).
Paragraph (f)	Paragraph (k).
Paragraph (g)	Paragraph (l).

After AD 94–01–10 R1 was issued, we reviewed the figures we have used over the past several years to calculate AD costs to operators. To account for various inflationary costs in the airline industry, we find it necessary to increase the labor rate used in these calculations from $60 per work hour to $65 per work hour. The cost impact information, below, reflects this increase in the specified hourly labor rate.

Costs of Compliance

The following table provides the estimated costs for U.S. operators to comply with this AD for any affected airplane that might be imported and placed on the U.S. Register in the future.

ESTIMATED COSTS

Action	Work hours	Average hourly labor rate	Parts cost	Cost per airplane	Number of U.S.-registered airplanes	Fleet cost
Modification	624	$65	Provided at no cost to operators.	$40,560	270	$10,951,200.
Functional test	1	65	None required	$65, per test	270	$17,550, per test.

The airplanes that are added to the applicability of this new AD are not on the U.S. Register and are currently operated by non-U.S. operators under foreign registry; therefore, they are not directly affected by this AD. However, we consider this AD necessary to ensure that the unsafe condition is addressed if a newly affected airplane is imported and placed on the U.S. Register in the future; in that case, the costs identified in the Estimated Costs table above would apply.

FAA's Determination of the Effective Date

The newly added airplanes affected by this AD are currently not on the U.S. Register. Therefore, providing notice and opportunity for public comment is unnecessary before this AD is issued, and this AD may be made effective in less than 30 days after it is published in the **Federal Register**.

Comments Invited

Although this is a final rule that was not preceded by notice and an opportunity for public comment, we invite you to submit any relevant written data, views, or arguments regarding this AD. Send your comments to an address listed under **ADDRESSES.** Include ''Docket No. FAA–2005–20009; Directorate Identifier 2003–NM–220–AD'' at the beginning of your comments. We specifically invite comments on the overall regulatory, economic, environmental, and energy aspects of the AD. We will consider all comments received by the closing date and may amend the AD in light of those comments.

We will post all comments we receive, without change, to *http://dms.dot.gov*, including any personal information you provide. We will also post a report summarizing each substantive verbal contact with FAA personnel concerning this AD. Using the search function of our docket Web site, anyone can find and read the comments in any of our dockets, including the name of the individual who sent the comment (or signed the comment on behalf of an association, business, labor union, etc.). You can review the DOT's complete Privacy Act Statement in the **Federal Register** published on April 11, 2000 (65 FR 19477–78), or you can visit *http://dms.dot.gov.*

Authority for This Rulemaking

Title 49 of the United States Code specifies the FAA's authority to issue rules on aviation safety. Subtitle I, section 106, describes the authority of the FAA Administrator. Subtitle VII, Aviation Programs, describes in more detail the scope of the Agency's authority.

We are issuing this rulemaking under the authority described in subtitle VII, part A, subpart III, section 44701, ''General requirements.'' Under that section, Congress charges the FAA with promoting safe flight of civil aircraft in air commerce by prescribing regulations for practices, methods, and procedures the Administrator finds necessary for safety in air commerce. This regulation is within the scope of that authority because it addresses an unsafe condition that is likely to exist or develop on products identified in this rulemaking action.

Regulatory Findings

We have determined that this AD will not have federalism implications under Executive Order 13132. This AD will not have a substantial direct effect on the States, on the relationship between the National Government and the States, or on the distribution of power and responsibilities among the various levels of government.

For the reasons discussed above, I certify that the regulation:

1. Is not a ''significant regulatory action'' under Executive Order 12866;

2. Is not a ''significant rule'' under the DOT Regulatory Policies and Procedures (44 FR 11034, February 26, 1979); and

3. Will not have a significant economic impact, positive or negative, on a substantial number of small entities under the criteria of the Regulatory Flexibility Act.

We prepared a regulatory evaluation of the estimated costs to comply with this AD. See the **ADDRESSES** section for a location to examine the regulatory evaluation.

List of Subjects in 14 CFR Part 39

Air transportation, Aircraft, Aviation safety, Incorporation by reference, Safety.

Adoption of the Amendment

■ Accordingly, under the authority delegated to me by the Administrator, the FAA amends 14 CFR part 39 as follows:

PART 39—AIRWORTHINESS DIRECTIVES

■ 1. The authority citation for part 39 continues to read as follows:

Authority: 49 U.S.C. 106(g), 40113, 44701.

§ 39.13 [Amended]

■ 2. The FAA amends § 39.13 by removing amendment 39–13247 (68 FR 48546, August 14, 2003) and adding the following new AD:

94–01–10 R2 Boeing: Amendment 39–13937. Docket No. FAA–2005–20009; Directorate Identifier 2003–NM–220–AD.

Effective Date

(a) This airworthiness directive (AD) becomes effective January 28, 2005.

Affected ADs

(b) This AD revises AD 94–01–10 R1, amendment 39–13247 (68 FR 48546, August 14, 2003).

Applicability

(c) This AD applies to Boeing Model 757–200 and –200PF series airplanes, certificated in any category, equipped with Pratt and Whitney PW2000 series engines.

Unsafe Condition

(d) This AD was prompted by a determination of an error in the existing AD. The Federal Aviation Administration is issuing this AD to prevent deployment of a thrust reverser in flight and subsequent reduced controllability of the airplane.

Compliance

(e) You are responsible for having the actions required by this AD performed within the compliance times specified, unless the actions have already been done.

Inspections/Adjustments/Functional Checks/Modification

(f) For airplanes having line numbers prior to 442: Within 14 days after September 16, 1991 (the effective date of AD 91–20–09, amendment 39–8043), accomplish either paragraph (f)(1) or (f)(2) of this AD.

(1) Accomplish both paragraphs (f)(1)(i) and (f)(1)(ii) of this AD:

(i) Inspect the thrust reverser directional control valve (DCV) assemblies of both engines to determine the solenoid-driven pilot valve's part number, in accordance with Boeing Alert Service Bulletin 757–78A0027, dated September 9, 1991.

(A) If any DCV has a suspect pilot valve as specified in the service bulletin, prior to further flight, replace the DCV with a DCV that has a part number of a non-suspect solenoid-driven pilot valve, in accordance with the service bulletin.

(B) If a DCV has a non-suspect solenoid-driven pilot valve as specified in the service bulletin, that pilot valve does not need to be replaced.

(ii) Perform all tests and inspections of the engine thrust reverser control and indication system on both engines in accordance with Boeing Service Bulletin 757–78–0025, dated September 9, 1991. Prior to further flight, correct any discrepancy found in accordance with the service bulletin.

(2) Accomplish paragraph (f)(1) of this AD on one engine's thrust reverser and deactivate the other engine's thrust reverser, in accordance with section 78–31–1 of Boeing Document D630N002, ''Boeing 757 Dispatch Deviation Guide,'' Revision 8, dated January 15, 1991.

(g) For airplanes having line numbers prior to 442: Within 24 days after September 16, 1991, the requirements of paragraph (f)(1) of this AD must be accomplished on both engines' thrust reverser systems.

(h) For airplanes having line numbers prior to 442: Repeat the tests and inspections specified in paragraph (f)(1)(ii) of this AD at intervals not to exceed 3,000 flight hours, and before further flight following any maintenance that disturbs the thrust reverser control system. Correct any discrepancy before further flight in accordance with Boeing Service Bulletin 757–78–0025, dated September 9, 1991.

Installation/Functional Test

(i) For airplanes having line numbers prior to 442: Within 5 years after March 3, 1994 (the effective date of AD 94–01–10, amendment 39–8792), install an additional thrust reverser system locking feature (sync lock installation), in accordance with Boeing Service Bulletin 757–78–0028, Revision 1, dated October 29, 1992; or Revision 2, dated January 14, 1993.

(j) For all airplanes: Within 1,000 hours' time-in-service after installing the sync lock required by paragraph (i) of this AD (either in production or by retrofit), or within 1,000 hours' time-in-service after March 3, 1994, whichever occurs later; and thereafter at intervals not to exceed 1,000 hours' time-in-service: Perform functional tests of the sync lock in accordance with the ''Thrust Reverser Sync Lock Integrity Test'' procedures specified below. If any discrepancy is found during any test, correct it before further flight in accordance with a method approved by the Manager, Seattle Aircraft Certification Office (ACO), FAA; the corrective action in the Boeing 757 Maintenance Manual is one approved method.

Thrust Reverser Sync Lock Integrity Test

1. General
   A. Use this procedure to test the integrity of the thrust reverser sync locks.
2. Thrust Reverser Sync Lock Test
   A. Prepare for the Thrust Reverser Sync Lock Test.
   (1) Open the auto speedbrake circuit breaker on the overhead circuit breaker panel, P11.
   (2) Do the steps that follow to supply power to the thrust reverser system:
   (a) Make sure the thrust levers are in the idle position.

Caution: Do not extend the thrust reverser while the core cowl panels are open. Damage to the thrust reverser and core cowl panels can occur.

(b) Make sure the thrust reverser halves are closed.
(c) Make sure the core cowl panels are closed.
(d) Put the EEC Maint Power switch or the EEC Power L and EEC Power R switches to the Altn position.
(e) For the left engine:
(1) Put the EEC Maint Channel Sel L switch to the Auto position.
(2) Put the L Eng fire switch to the Norm position.
(f) For the right engine:
(1) Put the EEC Maint Channel Sel R switch to the Auto position.
(2) Put the R Eng fire switch to the Norm position.
(g) Make sure the EICAS circuit breakers (6 locations) are closed.

Warning: The Thrust Reverser will automatically retract if the electrical power to the EEC/Thrust Reverser Control System is turned off or if the EEC Maint Power switch is moved to the Norm position. The accidental operation of the Thrust Reverser can cause injury to persons or damage to equipment can occur.

(h) Make sure these circuit breakers on the main power distribution panel, P6, are closed:
(1) Fuel Cond Cont L
(2) Fuel Cond Cont R
(3) T/L Interlock L
(4) T/L Interlock R
(5) Left T/R Sync Lock
(6) Right T/R Sync Lock
(7) L Eng Electronic Engine Control Altn Pwr (if installed)
(8) R Eng Electronic Engine Control Altn Pwr (if installed)
(i) Make sure these circuit breakers on the overhead circuit breaker panel, P11, are closed:
(1) Air/Gnd Sys 1
(2) Air/Gnd Sys 2
(3) Landing Gear Pos Sys 1
(4) Landing Gear Pos Sys 2
(j) For the left engine, make sure these circuit breakers on the P11 panel are closed:

(1) Left Engine PDIU
(2) Left Engine Thrust Reverser Cont/Scav Press
(3) Left Engine Electronic Engine Control Altn Pwr (if installed)
(4) Left Engine Thrust Reverser PRI Cont
(5) Left Engine Thrust Reverser Sec Cont
(k) For the right engine, make sure these circuit breakers on the P11 panel are closed:
(1) Right Engine PDIU
(2) Right Engine Thrust Reverser Cont/Scav Press
(3) Right Engine Electronic Engine Control Altn Pwr (if installed)
(4) Right Engine Thrust Reverser PRI Cont
(5) Right Engine Thrust Reverser Sec Cont
(l) Supply electrical power.
(m) Remove the pressure from the left (right) hydraulic system.
B. Do the Thrust Reverser Sync Lock Test.
(1) Move and hold the manual unlock lever on the center actuator on both thrust reverser sleeves to the unlock position.
(2) Make sure the thrust reverser sleeves did not move.
(3) Move the left (right) reverser thrust lever up and rearward to the idle detent position.
(4) Make sure both thrust reverser sleeves move aft (approximately 0.15 to 0.25 inch).
(5) Release the manual unlock lever on the center actuators.

Warning: Make sure all persons and equipment are clear of the area around the Thrust Reverser. When you apply hydraulic pressure the Thrust Reverser will extend and can cause injuries to persons or damage to equipment.

(6) Pressurize the left (right) hydraulic system.
(7) Make sure the thrust reverser extends.
(8) Move the left (right) reverser thrust lever to the fully forward and down position to retract the thrust reverser.
C. Put the Airplane Back to its Usual Condition.
(1) Remove hydraulic pressure.
(2) Close the left and right fan cowls.
(3) Close the Auto Speedbrake circuit breaker on the P11 panel.
(4) Remove electrical power if it is not necessary.
(5) Return the EEC Maint Power switch or the EEC Power L and EEC Power R switches to the Normal position.
D. Repeat the Thrust Reverser Sync Lock Test on the other engine.''

(k) Installation of the sync lock, as required by paragraph (i) of this AD, constitutes terminating action for the requirements of paragraphs (f) through (h) of this AD.

Alternative Methods of Compliance (AMOCs)

(l)(1) The Manager, Seattle Aircraft Certification Office (ACO), FAA, has the authority to approve AMOCs for this AD, if requested in accordance with the procedures found in 14 CFR 39.19.

(2) We approve the following for the corresponding requirements of this AD: AMOCs approved previously in accordance with AD 91–20–09, amendment 39–8043; AD 94–01–10, amendment 39–8792; and AD 94–01–10 R1, amendment 39–13247.

Material Incorporated by Reference

(m) Except as otherwise specified in this AD, the actions must be done in accordance with Boeing Alert Service Bulletin 757–78A0027, dated September 9, 1991; Boeing Service Bulletin 757–78–0025, dated September 9, 1991; Boeing Document D630N002, ''Boeing 757 Dispatch Deviation Guide,'' Revision 8, dated January 15, 1991; and Boeing Service Bulletin 757–78–0028, Revision 1, dated October 29, 1992, or Boeing Service Bulletin 757–78–0028, Revision 2, dated January 14, 1993; as applicable.

(1) The incorporation by reference of Boeing Service Bulletin 757–78–0028, Revision 1, dated October 29, 1992; and Boeing Service Bulletin 757–78–0028, Revision 2, dated January 14, 1993; was approved previously by the Director of the Federal Register as of March 3, 1994 (59 FR 4558, February 1, 1994).

(2) The incorporation by reference of Boeing Alert Service Bulletin 757–78A0027, dated September 9, 1991; Boeing Service Bulletin 757–78–0025, dated September 9, 1991; and Boeing Document D630N002, ''Boeing 757 Dispatch Deviation Guide,'' Revision 8, dated January 15, 1991; was approved previously by the Director of the Federal Register as of September 16, 1991 (56 FR 46725, September 16, 1991). (The document number of Boeing Alert Service Bulletin 757–78A0027, dated September 9, 1991, was cited erroneously in the September 16, 1991, issue of the **Federal Register** as ''757–78H0027.'' The document number of Boeing Service Bulletin 757–78–0025, dated September 9, 1991, was also cited erroneously in the September 16, 1991, issue of the **Federal Register** as ''757–0025.'')

(3) Contact Boeing Commercial Airplanes, PO Box 3707, Seattle, Washington 98124–2207, for copies of the service documents. Copies may be inspected at the FAA, Transport Airplane Directorate, 1601 Lind Avenue, SW., Renton, Washington; or at the National Archives and Records Administration (NARA). For information on the availability of this material at NARA, call (202) 741–6030, or go to *http://www.archives.gov/federal_register/code_of_federal_regulations/ibr_locations.html.*

Issued in Renton, Washington, on December 29, 2004.

Kevin M. Mullin,

Acting Manager, Transport Airplane Directorate, Aircraft Certification Service.

[FR Doc. 05–536 Filed 1–12–05; 8:45 am]

BILLING CODE 4910–13–P

DEPARTMENT OF TRANSPORTATION

Federal Aviation Administration

14 CFR Part 39

[Docket No. 2000–NE–05–AD; Amendment 39–13941; AD 2005–01–16]

RIN 2120–AA64

Airworthiness Directives; Rolls-Royce plc RB211 Trent 700 Series Turbofan Engines

AGENCY: Federal Aviation Administration (FAA), DOT.

ACTION: Final rule; request for comments.

SUMMARY: The FAA is superseding an existing airworthiness directive (AD) for Rolls-Royce plc (RR) RB211 Trent 768–60, Trent 772–60, and Trent 772B–60 turbofan engines with low pressure compressor (LPC) fan blade part numbers FK22580, FK23411, FK25441, and FK25968 installed. That AD currently requires initial ultrasonic inspections of the fan blade root with blades removed, repetitive ultrasonic inspections of the fan blade root with blades removed or installed, and ultrasonic inspection of the fan blade root to be done with the fan blades removed at least every third inspection. This AD requires the same inspections but at lower thresholds and intervals, and eliminates the requirement for ultrasonic inspection with the fan blades removed at least every third inspection. This AD results from analysis of flight data returned to RR, that shows a need for consistent inspection thresholds for all engine models. We are issuing this AD to prevent possible multiple LPC fan blade failures, which could result in an uncontained engine failure and damage to the airplane.

DATES: Effective January 28, 2005. The Director of the Federal Register approved the incorporation by reference of certain publications listed in the regulations as of January 28, 2005.

We must receive any comments on this AD by March 14, 2005.

ADDRESSES: Use one of the following addresses to submit comments on this AD:

- By mail: Federal Aviation Administration (FAA), New England Region, Office of the Regional Counsel, Attention: Rules Docket No. 2000–NE–05–AD, 12 New England Executive Park, Burlington, MA 01803–5299.
- By fax: (781) 238–7055.
- By e-mail: *9-ane-adcomment@faa.gov.*

You can get the service information referenced in this AD from Rolls-Royce

plc, PO Box 31, Derby, England; telephone: 011–44–1332–249428; fax: 011–44–1332–249223.

You may review copies at the FAA, New England Region, Office of the Regional Counsel, 12 New England Executive Park, Burlington, MA; or at the National Archives and Records Administration (NARA). For information on the availability of this material at NARA, call 202–741–6030, or go to: *http://www.archives.gov/federal_register/code_of_federal_regulations/ibr_locations.html.* You may examine the AD docket at the FAA, New England Region, Office of the Regional Counsel, 12 New England Executive Park, Burlington, MA.

FOR FURTHER INFORMATION CONTACT: Christopher Spinney, Aerospace Engineer, Engine Certification Office, FAA, Engine and Propeller Directorate, 12 New England Executive Park, Burlington, MA 01803–5299; telephone (781) 238–7175; fax (781) 238–7199.

SUPPLEMENTARY INFORMATION: On August 1, 2001, we issued AD 2001–16–05, Amendment 39–12373 (66 FR 42105, August 10, 2001). That AD requires initial ultrasonic inspections of the fan blade root with blades removed, repetitive ultrasonic inspections of the fan blade root with blades removed or installed, and ultrasonic inspections to be done with the fan blades removed at least every third inspection. That AD resulted from reports of fan blade failures due to dovetail root cracks. That condition, if not corrected, could result in possible multiple LPC fan blade failures, uncontained engine failure, and damage to the airplane.

Actions Since AD 2001–16–05 Was Issued

Since that AD was issued, analysis of flight data returned to RR shows a need for consistent inspection thresholds for all engine models. The actions specified in this AD are intended to prevent possible multiple LPC fan blade failures, which could result in an uncontained engine failure and damage to the airplane.

Special Flight Permits Paragraph Removed

Paragraph (g) of the current AD, AD 2001–16–05, contains a paragraph pertaining to special flight permits. Even though this final rule does not contain a similar paragraph, we have made no changes with regard to the use of special flight permits to operate the airplane to a repair facility to do the work required by this AD. In July 2002, we published a new Part 39 that contains a general authority regarding special flight permits and airworthiness directives; see Docket No. FAA–2004–8460, Amendment 39–9474 (69 FR 47998, July 22, 2002). Thus, when we now supersede ADs we will not include a specific paragraph on special flight permits unless we want to limit the use of that general authority granted in section 39.23.

Relevant Service Information

We have reviewed and approved the technical contents of RR Mandatory Service Bulletin (MSB) No. RB.211–72–C878, Revision 7, dated December 5, 2003, that:

- Removes LPC fan blades and performs initial and repetitive ultrasonic inspections for cracks in LPC fan blade dovetail roots, at earlier initial thresholds than the inspections required by the current AD, and, at adjusted repetitive inspection intervals from the current AD.
- Provides a procedure that does not require blade removal from the engine in order to perform repetitive ultrasonic inspections for cracks in LPC fan blade dovetail roots.

Bilateral Airworthiness Agreement

This engine model is manufactured in the United Kingdom and is type certificated for operation in the United States under the provisions of section 21.29 of the Federal Aviation Regulations (14 CFR 21.29) and the applicable bilateral airworthiness agreement. Pursuant to this bilateral airworthiness agreement, the Civil Aviation Authority (CAA) has kept the FAA informed of the situation described above. The FAA has examined the findings of the CAA, reviewed all available information, and determined that AD action is necessary for products of this type design that are certificated for operation in the United States.

FAA's Determination of an Unsafe Condition and Proposed Actions

Although none of these affected engine models are used on any airplanes that are registered in the United States, the possibility exists that the engine models could be used on airplanes that are registered in the United States in the future. Since an unsafe condition has been identified that is likely to exist or develop on other RR RB211 Trent 768–60, Trent 772–60, and Trent 772B–60 turbofan engine models of the same type design, this AD is being issued to prevent possible multiple LPC fan blade failures, which could result in an uncontained engine failure and damage to the airplane. This AD requires:

- Initial ultrasonic inspections of the fan blade root with blades removed; at or before accumulating 1,100 cycles-since-new (CSN) on the fan blades after the effective date of the AD; and
- For blades with more than 1,100 CSN that have not been previously inspected, initial ultrasonic inspections of the fan blade root with blades removed; within 300 cycles-in-service (CIS) from the effective date of the AD or within 2,000 CSN, whichever occurs first; and
- Repetitive ultrasonic inspections of the fan blade root, with blades removed within 300 CIS intervals, or with blades not removed within 250 CIS intervals.

The actions are required to be done using the service bulletin described previously.

Immediate Adoption of This AD

Since there are currently no domestic operators of these engine models, notice and opportunity for prior public comment are unnecessary. Therefore, a situation exists that allows the immediate adoption of this regulation.

Comments Invited

This AD is a final rule that involves requirements affecting flight safety and was not preceded by notice and an opportunity for public comment; however, we invite you to submit any written relevant data, views, or arguments regarding this AD. Send your comments to an address listed under **ADDRESSES.** Include ''AD Docket No. 2000–NE–05–AD'' in the subject line of your comments. If you want us to acknowledge receipt of your mailed comments, send us a self-addressed, stamped postcard with the docket number written on it; we will date-stamp your postcard and mail it back to you. We specifically invite comments on the overall regulatory, economic, environmental, and energy aspects of the rule that might suggest a need to modify it. If a person contacts us verbally, and that contact relates to a substantive part of this AD, we will summarize the contact and place the summary in the docket. We will consider all comments received by the closing date and may amend the AD in light of those comments.

Examining the AD Docket

You may examine the AD Docket (including any comments and service information), by appointment, between 8 a.m. and 4:30 p.m., Monday through Friday, except Federal holidays. See **ADDRESSES** for the location.

Authority for This Rulemaking

Title 49 of the United States Code specifies the FAA's authority to issue rules on aviation safety. Subtitle I, section 106, describes the authority of the FAA Administrator. Subtitle VII, Aviation Programs, describes in more detail the scope of the Agency's authority.

We are issuing this rulemaking under the authority described in subtitle VII, part A, subpart III, section 44701, ''General requirements.'' Under that section, Congress charges the FAA with promoting safe flight of civil aircraft in air commerce by prescribing regulations for practices, methods, and procedures the Administrator finds necessary for safety in air commerce. This regulation is within the scope of that authority because it addresses an unsafe condition that is likely to exist or develop on products identified in this rulemaking action.

Regulatory Findings

We have determined that this AD will not have federalism implications under Executive Order 13132. This AD will not have a substantial direct effect on the States, on the relationship between the national Government and the States, or on the distribution of power and responsibilities among the various levels of government.

For the reasons discussed above, I certify that the regulation:

1. Is not a ''significant regulatory action'' under Executive Order 12866;

2. Is not a ''significant rule'' under the DOT Regulatory Policies and Procedures (44 FR 11034, February 26, 1979); and

3. Will not have a significant economic impact, positive or negative, on a substantial number of small entities under the criteria of the Regulatory Flexibility Act.

We prepared a summary of the costs to satisfy the initial requirements of this AD and placed it in the AD Docket. You may get a copy of this summary by sending a request to us at the address listed under **ADDRESSES.** Include ''AD Docket No. 2000–NE–05–AD'' in your request.

List of Subjects in 14 CFR Part 39

Air transportation, Aircraft, Aviation safety, Incorporation by reference, Safety.

Adoption of the Amendment

■ Accordingly, under the authority delegated to me by the Administrator, the FAA amends part 39 of the Federal Aviation Regulations (14 CFR part 39) as follows:

PART 39—AIRWORTHINESS DIRECTIVES

■ 1. The authority citation for part 39 continues to read as follows:

Authority: 49 U.S.C. 106(g), 40113, 44701.

§ 39.13 [Amended]

■ 2. The Federal Aviation Administration (FAA) amends § 39.13 by removing Amendment 39–12373 (66 FR 42105, August 10, 2001), and by adding a new airworthiness directive (AD), Amendment 39–13941, to read as follows:

2005–01–16 Rolls-Royce plc: Amendment 39–13941. Docket No. 2000–NE–05–AD. Supersedes AD 2001–16–05, Amendment 39–12373.

Effective Date

(a) This AD becomes effective January 28, 2005.

Affected ADs

(b) This AD supersedes AD 2001–16–05, Amendment 39–12373.

Applicability

(c) This AD applies to Rolls-Royce plc (RR) RB211 Trent 768–60, Trent 772–60, and Trent 772B–60 turbofan engines with low pressure compressor (LPC) fan blade part numbers FK22580, FK23411, FK25441, and FK25968 installed. These engines are installed on, but not limited to, Airbus A330 series airplanes.

Unsafe Condition

(d) This AD supersedure results from analysis of flight data returned to RR, that shows a need for consistent inspection thresholds for all engine models. We are issuing this AD to prevent possible multiple LPC fan blade failures, which could result in an uncontained engine failure and damage to the airplane.

Compliance

(e) You are responsible for having the actions required by this AD performed within the compliance times specified unless the actions have already been done.

Initial Ultrasonic Inspection

(f) Perform an initial ultrasonic inspection of the LPC fan blade dovetail roots using Method A (paragraphs 3.A.(1) through 3.A.(8); blades removed from engine) of Accomplishment Instructions of RR Mandatory Service Bulletin (MSB) No. RB.211–72–C878, Revision 7, dated December 5, 2003, as follows:

(1) Inspect before accumulating 1,100 cycles-since-new (CSN) on the fan blades; or

(2) For fan blades that have accumulated more than 800 CSN on the effective date of this AD that have not been previously inspected, inspect within 300 cycles-in-service (CIS) from the effective date of this AD or within 2,000 CSN, whichever occurs first.

Repetitive Ultrasonic Inspections

(g) Perform repetitive inspections of the LPC fan blades using Method A, or Method B (paragraphs 3.B.(1) through 3.B.(5); blades not removed from the engine) of the Accomplishment Instructions of RR MSB No. RB.211–72–C878, Revision 7, dated December 5, 2003, as follows:

(1) Inspect within 300 CIS since-last-inspected with Method A of the SB; or

(2) Inspect within 250 CIS since-last-inspected with Method B of the SB.

Alternative Methods of Compliance

(h) The Manager, Engine Certification Office, has the authority to approve alternative methods of compliance for this AD if requested using the procedures found in 14 CFR 39.19.

Material Incorporated by Reference

(i) You must use the Rolls-Royce plc service information specified in Table 1 of this AD to perform the blade inspections and replacements required by this AD. The Director of the Federal Register approved the incorporation by reference of the documents listed in Table 1 of this AD in accordance with 5 U.S.C. 552(a) and 1 CFR part 51. You can get a copy from Rolls-Royce plc, PO Box 31, Derby DE24 6BJ, UK; telephone 44 (0) 1332 242424; fax 44 (0) 1332 249936. You may review copies at the FAA, New England Region, Office of the Regional Counsel, Attention: Rules Docket No. 2000–NE–05–AD, 12 New England Executive Park, Burlington, MA; or at the National Archives and Records Administration (NARA). For information on the availability of this material at NARA, call (202) 741–6030, or go to: *http://www.archives.gov/federal_register/code_of_federal_regulations/ibr_locations.html.* Table 1 follows:

TABLE 1.—INCORPORATION BY REFERENCE

Mandatory service bulletin No.	Page	Revision	Date
RB.211–72–C878 Total Pages: 9	All	7	December 5, 2003.
RB.211–72–C878, Appendix 1 Total Pages: 4	All	7	December 5, 2003.
RB.211–72–C878, Appendix 2	All	7	December 5, 2003.

TABLE 1.—INCORPORATION BY REFERENCE—Continued

Mandatory service bulletin No.	Page	Revision	Date
Total Pages: 5			

Related Information

(j) United Kingdom Civil Aviation Authority airworthiness directive 003–11–99 also addresses the subject of this AD.

Issued in Burlington, Massachusetts, on January 4, 2005.

Francis A. Favara,

Acting Manager, Engine and Propeller Directorate, Aircraft Certification Service.

[FR Doc. 05–484 Filed 1–12–05; 8:45 am]

BILLING CODE 4910–13–P

DEPARTMENT OF TRANSPORTATION

Federal Aviation Administration

14 CFR Part 39

[Docket No. 2001–NE–17–AD; Amendment 39–13940; AD 2005–01–15]

RIN 2120–AA64

Airworthiness Directives; Rolls-Royce plc RB211 Trent 875, 877, 884, 884B, 892, 892B, and 895 Series Turbofan Engines

AGENCY: Federal Aviation Administration (FAA), DOT.

ACTION: Final rule; request for comments.

SUMMARY: The FAA is superseding an existing airworthiness directive (AD) for Rolls-Royce plc (RR) RB211 Trent 875, 877, 884, 892, 892B, and 895 series turbofan engines with certain part number (P/N) low pressure compressor (LPC) fan blades installed. That AD currently requires initial and repetitive ultrasonic inspections of the fan blade dovetail roots. This AD requires the same actions except at reduced compliance times for certain blades, defines a specific terminating action to the repetitive blade inspection requirements, and adds the 884B series to the applicability. This AD results from a report of a cracked fan blade found before the blade reached the initial inspection threshold of AD 2002–11–08. This AD also results from the need to reduce a repetitive inspection compliance time due to potential breakdown of blade coating and lubrication on certain blades. We are issuing this AD to prevent multiple LPC fan blade failures due to cracks, which could result in uncontained engine failure and possible damage to the airplane.

DATES: Effective January 28, 2005. The Director of the Federal Register approved the incorporation by reference of certain publications listed in the regulations as of January 28, 2005.

We must receive any comments on this AD by March 14, 2005.

ADDRESSES: Use one of the following addresses to submit comments on this AD:

- By mail: Federal Aviation Administration (FAA), New England Region, Office of the Regional Counsel, Attention: Rules Docket No. 2001–NE–17–AD, 12 New England Executive Park, Burlington, MA 01803–5299.
- By fax: (781) 238–7055.
- By e-mail: *9-ane-adcomment@faa.gov.*

You can get the service information referenced in this AD from Rolls-Royce plc, P.O. Box 31, Derby DE24 6BJ, UK; telephone 44 (0) 1332 242424; fax 44 (0) 1332 249936.

You may examine the AD docket, by appointment, at the FAA, New England Region, Office of the Regional Counsel, 12 New England Executive Park, Burlington, MA.

FOR FURTHER INFORMATION CONTACT: Christopher Spinney, Aerospace Engineer, Engine Certification Office, FAA, Engine and Propeller Directorate, 12 New England Executive Park, Burlington, MA 01803–5299; telephone (781) 238–7175; fax (781) 238–7199.

SUPPLEMENTARY INFORMATION: On May 27, 2002, the FAA issued AD 2002–11–08, Amendment 39–12769 (67 FR 38852, June 6, 2002). That AD requires initial and repetitive ultrasonic inspections of the fan blade dovetail roots. That AD was the result of the loss of an LPC fan blade during takeoff. That condition, if not corrected, could result in multiple LPC fan blade failures due to cracks, which could result in uncontained engine failure and possible damage to the airplane.

Actions Since AD 2002–11–08 Was Issued

Since that AD was issued, the Civil Aviation Authority (CAA), which is the airworthiness authority for the United Kingdom (UK), notified us that an unsafe condition may exist on RR RB211 Trent 875, 877, 884, 884B, 892, 892B, and 895 series turbofan engines. The CAA advises that a cracked fan blade was found before the blade reached the initial inspection threshold specified in AD 2002–11–08. The CAA also advises that potential breakdown of blade coating and lubrication on certain blades might occur, leading to blade cracking.

Relevant Service Information

We have reviewed and approved the technical contents of Rolls-Royce (RR) Alert Service Bulletin (ASB) No. RB.211–72–AD344, Revision 7, dated March 12, 2004, that provides procedures to ultrasonic-inspect the blade root on LPC fan blades. We have also reviewed and approved the technical contents of RR Service Bulletin (SB) No. RB.211–72–D672, dated February 1, 2002, that provides procedures to rework, relubricate, and remark the fan blades at fan blade overhaul, and lists part numbers for new fan blades that feature additional blade root processing requirements. The CAA classified these service bulletins as mandatory and issued AD G–2004–0008, dated April 29, 2004, in order to ensure the airworthiness of these RR engines in the UK.

Bilateral Airworthiness Agreement

These engine models are manufactured in the UK and are type certificated for operation in the United States under the provisions of § 21.29 of the Federal Aviation Regulations (14 CFR 21.29) and the applicable bilateral airworthiness agreement. Pursuant to this bilateral airworthiness agreement, the CAA has kept the FAA informed of the situation described above. The FAA has examined the findings of the CAA, reviewed all available information, and determined that AD action is necessary for products of this type design that are certificated for operation in the United States.

FAA's Determination and Requirements of This AD

The unsafe condition described previously is likely to exist or develop on other RR RB211 Trent 875, 877, 884, 884B, 892, 892B, and 895 series turbofan engines of the same type design. We are issuing this AD to prevent multiple LPC fan blade failures due to cracks, which could result in uncontained engine failure and possible damage to the airplane. This AD:

- Requires initial and repetitive ultrasonic-inspections of the dovetail

roots of LPC fan blades P/Ns FK30838, FK30840, FK30842, FW12960, FW12961, FW12962, and FW13175.

• Reduces the initial inspection threshold for fan blades, P/Ns FK30838, FK30840, and FK30842 in Table 1 for Airplane Maximum Gross Weight of 632,500 pounds and 648,000 pounds, from 2,400 cycles-since-new (CSN) to 1,200 CSN.

• Reduces the repetitive inspection threshold for fan blades, P/Ns FW12960, FW12961, FW12962, and FW13175 in Table 4 for Airplane Maximum Gross Weight of 545,000 pounds from 1,200 CSN to 600 CSN.

• Defines a terminating action to the repetitive blade inspection requirements in the AD, to be done at the next shop visit when fan blades are removed, but no later than December 31, 2009. The terminating action consists of replacing LPC fan blades with a complete set of reworked, relubricated, and remarked LPC fan blades, using Rolls-Royce SB No. RB.211–72–D672, dated February 1, 2002, or with a complete set of new LPC fan blades that feature additional blade root processing requirements.

• Adds the 884B series engine to the applicability.

You must use the service information described previously to perform the actions required by this AD.

FAA's Determination of the Effective Date

Since an unsafe condition exists that requires the immediate adoption of this AD, we have found that notice and opportunity for public comment before issuing this AD are impracticable, and that good cause exists for making this amendment effective in less than 30 days.

Comments Invited

This AD is a final rule that involves requirements affecting flight safety and was not preceded by notice and an opportunity for public comment; however, we invite you to submit any written relevant data, views, or arguments regarding this AD. Send your comments to an address listed under **ADDRESSES**. Include ''AD Docket No. 2001–NE–17–AD'' in the subject line of your comments. If you want us to acknowledge receipt of your mailed comments, send us a self-addressed, stamped postcard with the docket number written on it; we will date-stamp your postcard and mail it back to you. We specifically invite comments on the overall regulatory, economic, environmental, and energy aspects of the rule that might suggest a need to modify it. If a person contacts us verbally, and that contact relates to a substantive part of this AD, we will summarize the contact and place the summary in the docket. We will consider all comments received by the closing date and may amend the AD in light of those comments.

We are reviewing the writing style we currently use in regulatory documents. We are interested in your comments on whether the style of this document is clear, and your suggestions to improve the clarity of our communications with you. You may get more information about plain language at *http://www.faa.gov/language* and *http://www.plainlanguage.gov.*

Examining the AD Docket

You may examine the AD Docket (including any comments and service information), by appointment, between 8 a.m. and 4:30 p.m., Monday through Friday, except Federal holidays. See **ADDRESSES** for the location.

Authority for This Rulemaking

Title 49 of the United States Code specifies the FAA's authority to issue rules on aviation safety. Subtitle I, section 106, describes the authority of the FAA Administrator. Subtitle VII, Aviation Programs, describes in more detail the scope of the Agency's authority.

We are issuing this rulemaking under the authority described in subtitle VII, part A, subpart III, section 44701, ''General requirements.'' Under that section, Congress charges the FAA with promoting safe flight of civil aircraft in air commerce by prescribing regulations for practices, methods, and procedures the Administrator finds necessary for safety in air commerce. This regulation is within the scope of that authority because it addresses an unsafe condition that is likely to exist or develop on products identified in this rulemaking action.

Regulatory Findings

We have determined that this AD will not have federalism implications under Executive Order 13132. This AD will not have a substantial direct effect on the States, on the relationship between the national Government and the States, or on the distribution of power and responsibilities among the various levels of government.

For the reasons discussed above, I certify that the regulation:

1. Is not a ''significant regulatory action'' under Executive Order 12866;

2. Is not a ''significant rule'' under the DOT Regulatory Policies and Procedures (44 FR 11034, February 26, 1979); and

3. Will not have a significant economic impact, positive or negative, on a substantial number of small entities under the criteria of the Regulatory Flexibility Act.

We prepared a summary of the costs to comply with this AD and placed it in the AD Docket. You may get a copy of this summary by sending a request to us at the address listed under **ADDRESSES**. Include ''AD Docket No. 2001–NE–17–AD'' in your request.

List of Subjects in 14 CFR Part 39

Air transportation, Aircraft, Aviation safety, Incorporation by reference, Safety.

Adoption of the Amendment

■ Accordingly, under the authority delegated to me by the Administrator, the FAA amends part 39 of the Federal Aviation Regulations (14 CFR part 39) as follows:

PART 39—AIRWORTHINESS DIRECTIVES

■ 1. The authority citation for part 39 continues to read as follows:

Authority: 49 U.S.C. 106(g), 40113, 44701.

§ 39.13 [Amended]

■ 2. The Federal Aviation Administration (FAA) amends § 39.13 by removing Amendment 39–12769 (67 FR 38852; June 6, 2002), and by adding a new airworthiness directive (AD), Amendment 39–13940, to read as follows:

2005–01–15 Rolls-Royce plc: Amendment 39–13940. Docket No. 2001–NE–17–AD. Supersedes AD 2002–11–08, Amendment 39–12769.

Effective Date

(a) This AD becomes effective January 28, 2005.

Affected ADs

(b) This AD supersedes AD 2002–11–08, Amendment 39–12769.

Applicability

(c) This AD applies to Rolls-Royce plc (RR) RB211 Trent 875, 877, 884, 884B, 892, 892B, and 895 series turbofan engines with low pressure compressor (LPC) fan blades, part numbers (P/Ns) FK30838, FK30840, FK30842, FW12960, FW12961, FW12962, and FW13175, installed. These engines are installed on, but not limited to, Boeing Company 777 series airplanes.

Unsafe Condition

(d) This AD results from a report of a cracked fan blade found before the blade reached the initial inspection threshold of AD 2002–11–08. This AD also results from the need to reduce a repetitive inspection compliance time due to potential breakdown of blade coating and lubrication on certain blades. We are issuing this AD to prevent multiple LPC fan blade failures due to cracks,

which could result in uncontained engine failure and possible damage to the airplane.

Compliance

(e) You are responsible for having the actions required by this AD performed within the compliance times specified unless the actions have already been done.

(f) Ultrasonic-inspect and disposition the dovetail roots of LPC fan blades, P/Ns FK30838, FK30840, FK30842, FW12960, FW12961, FW12962, and FW13175, that are removed from the engine, using 3.A.(1) through 3.A.(5) or, for blades that are not removed from the engine, using 3.B.(1) through 3.B.(5) of the Accomplishment Instructions of RR Alert Service Bulletin (ASB) No. RB.211–72–AD344, Revision 7, dated March 12, 2004, as follows:

(1) For blades P/Ns FK30838, FK30840, and FK30842, that have not been relubricated during any interval exceeding 600 cycles-since-new (CSN) or cycles-since-rework (CSR) using either RR ASB No. RB.211–72–AD344 or No. RB.211–72–D347, inspect as specified in paragraph (f) of this AD and within the compliance times specified in the following Table 1:

TABLE 1.—COMPLIANCE TIMES FOR BLADES P/NS FK30838, FK30840, AND FK30842

Engine series	Boeing 777 series	Airplane maximum gross weight (times 1,000 pounds)	Initial inspection CSN	Repetitive inspection (cycles-since-last-inspection) (CSLI)
(i) –884B,–892	–300	(A) 660 and 632.5	600	80
		(B) 580	2,000	600
(ii) –884, –892, –892B, and –895	–200	(A) 632.5 and 648	1,200	100
		(B) 656	600	80
		(C) 555	2,000	600
(iii) –875	–200	535	2,000	600
(iv) –877	–200	545	2,000	600

(2) For blades P/Ns FK30838, FK30840, and FK30842, that have been relubricated at intervals not exceeding 600 CSN or CSR using either RR ASB No. RB.211–72–AD344 or SB RB.211–72–D347, inspect as specified in paragraph (f) of this AD and within the compliance times specified in the following Table 2:

TABLE 2.—COMPLIANCE TIMES FOR BLADES P/NS FK30838, FK30840, AND FK30842

Engine series	Boeing 777 series	Airplane maximum gross weight (times 1,000 pounds)	Initial inspection CSN	Repetitive inspection CSLI
(i) –884B, 892	–300	(A) 660 and 632.5	600	80
		(B) 580	2,400	600
(ii) 884, –892, –892B, and –895	–200	(A) 632.5 and 648	1,200	100
		(B) 656	600	80
		(C) 555	2,400	600
(iii) –875;	–200	535	2,400	600
(iv) –877	–200	545	2,400	600

(3) For blades P/Ns FW12960, FW12961, FW12962, and FW13175, either new or reworked to that configuration at greater than 600 CSN or since previous rework, or that have not been relubricated during any interval exceeding 600 CSN or CSR using either RR ASB No. RB.211–72–AD344 or RB.211–72–D347 requirements, inspect as specified in paragraph (f) of this AD and within the compliance times specified in the following Table 3:

TABLE 3.—COMPLIANCE TIMES FOR BLADES P/NS FW12960, FW12961, FW12962, AND FW13175

Engine series	Boeing 777 series	Airplane maximum gross weight (times 1,000 pounds)	Initial inspection CSN	Repetitive inspection CSLI
(i) –884B, –892	–300	(A) 660 and 632.5	600	100
		(B) 580	2,000	600
(ii) –884, –892, –892B, and –895	–200	(A) 632.5 and 648	1,200	125
		(B) 656	600	100
		(C) 555	2,000	600
(iii) –875	–200	535	2,000	600
(iv) –877	–200	545	2,000	600

(4) For blades P/Ns FW12960, FW12961, FW12962, and FW13175, either new or reworked to that configuration at fewer than 600 CSN or since previous rework, and that have been relubricated at intervals not exceeding 600 CSN using either RR ASB No. RB.211–72–AD344 or SB No. RB.211–72–D347, inspect as specified in paragraph (f) of this AD and within the compliance times specified in the following Table 4:

TABLE 4.—COMPLIANCE TIMES FOR BLADES P/NS FW12960, FW12961, FW12962, AND FW13175

Engine series	Boeing 777 series	Airplane maximum gross weight (times 1,000 pounds)	Initial inspection CSN	Repetitive inspection CSLI
(i) –884B, –892	–300	(A) 660 and 632.5	600	100
		(B) 580	2,400	1,200
(ii) –884, –892, –892B, and –895	–200	(A) 632.5 and 648	2,400	125
		(B) 656	600	100
		(C) 535	2,400	1,200
(iii) –875	–200	535	2,400	1,200
(iv) –877	–200	545	2,400	600

(g) When engines containing blades P/Ns FK30838, FK30840, FK30842, FW12960, FW12961, FW12962, and FW13175 are moved from one gross weight category to another, the inspection schedule that is applicable to the higher gross weight category must be used.

Terminating Action

(h) As terminating action to the repetitive inspection requirements of this AD, at the next shop visit when the fan blades are removed for repair or overhaul, but no later than December 31, 2009:

(1) Replace LPC fan blades P/Ns FK30838, FK30840, FK30842, FW12960, FW12961, FW12962, or FW13175 with a complete set of LPC fan blades that have been reworked, relubricated, and remarked using RR SB No. RB.211–72–D672, dated February 1, 2002; or;

(2) Replace LPC fan blades P/Ns FK30838, FK30840, FK30842, FW12960, FW12961, FW12962, or FW13175 with a complete set of new LPC fan blades that feature additional blade root processing requirements found in RR SB No. RB.211–72–D672, dated February 1, 2002.

Previous Credit

(i) Previous credit is allowed for initial inspections of fan blades that were done using RR ASB No. RB.211–72–AD344, Revision 4, dated March 15, 2002, Revision 5, dated June 20, 2003, Revision 6, dated February 27, 2004, or Revision 7, dated March 12, 2004, before the effective date of this AD.

Alternative Methods of Compliance

(j) The Manager, Engine Certification Office, has the authority to approve alternative methods of compliance for this AD if requested using the procedures found in 14 CFR 39.19.

Material Incorporated by Reference

(k) You must use the Rolls-Royce plc service information specified in Table 5 of this AD to perform the blade inspections and replacements required by this AD. The Director of the Federal Register approved the incorporation by reference of the documents listed in Table 5 of this AD in accordance with 5 U.S.C. 552(a) and 1 CFR part 51. You can get a copy from Rolls-Royce plc, P.O. Box 31, Derby DE24 6BJ, UK; telephone 44 (0) 1332 242424; fax 44 (0) 1332 249936. You may review copies at the FAA, New England Region, Office of the Regional Counsel, Attention: Rules Docket No. 2001–NE–17–AD, 12 New England Executive Park, Burlington, MA; or at the National Archives and Records Administration (NARA). For information on the availability of this material at NARA, call 202–741–6030, or go to: *http://www.archives.gov/federal_register/code_of_federal_regulations/ibr_locations.html*. Table 5 follows:

TABLE 5.—INCORPORATION BY REFERENCE

Service Bulletin No.	Page	Revision	Date
RB.211–72–AD344 Total Pages: 11	ALL	7	March 12, 2004.
RB.211–72–AD344, Appendices 1 through 5 Total Pages: 18	ALL	7	March 12, 2004.
RB.211–72–D672 Total Pages: 24	ALL	Original	February 1, 2002.

Related Information

(l) Civil Aviation Authority (CAA) airworthiness directive G–2004–0008, dated April 29, 2004, also addresses the subject of this AD.

Issued in Burlington, Massachusetts, on January 3, 2005.

Francis A. Favara,

Acting Manager, Engine and Propeller Directorate, Aircraft Certification Service.

[FR Doc. 05–485 Filed 1–12–05; 8:45 am]

BILLING CODE 4910–13–P

DEPARTMENT OF TRANSPORTATION

Federal Aviation Administration

14 CFR Part 39

[Docket No. FAA–2005–20010; Directorate Identifier 2003–NM–224–AD; Amendment 39–13938; AD 2005–01–13]

RIN 2120–AA64

Airworthiness Directives; Boeing Model 767–300 Series Airplanes

AGENCY: Federal Aviation Administration (FAA), DOT.

ACTION: Final rule; request for comments.

SUMMARY: The FAA is adopting a new airworthiness directive (AD) for certain Boeing Model 767–300 series airplanes. This AD requires repetitive functional tests and repetitive replacements of the auxiliary power unit (APU) and engine fire shutoff switches. This proposal also provides an optional terminating action for the repetitive functional tests and replacements. This AD is prompted by a report of the failure of the engine fire shutoff switch in the engine fire control module. We are issuing this AD to prevent mineral build-up on the APU and engine fire shutoff switches, which could lead to the switches failing to discharge fire suppressant to the affected fire zone and result in an uncontrolled engine or APU fire and consequent loss of the airplane.

DATES: Effective January 28, 2005. The incorporation by reference of a certain publication listed in the AD is approved

by the Director of the Federal Register as of January 28, 2005.

We must receive comments on this AD by March 14, 2005.

ADDRESSES: Use one of the following addresses to submit comments on this AD.

- DOT Docket Web site: Go to *http://dms.dot.gov* and follow the instructions for sending your comments electronically.
- Government-wide rulemaking Web site: Go to *http://www.regulations.gov* and follow the instructions for sending your comments electronically.
- Mail: Docket Management Facility; U.S. Department of Transportation, 400 Seventh Street, SW., Nassif Building, room PL–401, Washington, DC 20590.
- Fax: (202) 493–2251.
- Hand Delivery: Room PL–401 on the plaza level of the Nassif Building, 400 Seventh Street, SW., Washington, DC, between 9 a.m. and 5 p.m., Monday through Friday, except Federal holidays.

For service information identified in this proposed AD, contact Boeing Commercial Airplanes, P.O. Box 3707, Seattle, Washington 98124–2207.

You can examine the contents of this AD docket on the Internet at *http://dms.dot.gov,* or in person at the Docket Management Facility, U.S. Department of Transportation, 400 Seventh Street, SW., room PL–401, on the plaza level of the Nassif Building, Washington, DC. This docket number is FAA–2005–20010; the directorate identifier for this docket is 2003–NM–224–AD.

Examining the Dockets

You can examine the AD docket on the Internet at *http://dms.dot.gov,* or in person in the Docket Management Facility office between 9 a.m. and 5 p.m., Monday through Friday, except Federal holidays. The Docket Management Facility office (telephone (800) 647–5227) is located on the plaza level of the Nassif Building at the DOT street address stated in the **ADDRESSES** section. Comments will be available in the AD docket shortly after the Docket Management System (DMS) receives them.

FOR FURTHER INFORMATION CONTACT: Bernie Gonzalez, Aerospace Engineer, Propulsion Branch, ANM–140S, FAA, Seattle Aircraft Certification Office, 1601 Lind Avenue, SW., Renton, Washington 98055–4056; telephone (425) 917–6498; fax (425) 917–6590.

SUPPLEMENTARY INFORMATION: This AD is prompted by a report of the failure of the engine fire shutoff switch in the engine fire control module, which resulted in the inability to stow the thrust reverser on a certain Boeing Model 767 series airplane. On this installation the thrust reverser is operated by engine pneumatic bleed air, which is regulated by a spring-loaded-closed pressure regulating and shutoff valve (PRSOV). The PRSOV requires electrical power to stay open against the spring force. Its power supply is routed through the engine fire shutoff switch. The electrical contacts for the thrust reverser inside the engine fire shutoff switch are normally in the closed position. When the engine fire shutoff switch is pulled, during a fire or test, the power supplied to the thrust reverser PRSOV is removed and the valve closes off the engine bleed air, leaving the thrust reverser in the last commanded position. Investigation of the reported incident revealed that certain flight deck humidifiers distribute unfiltered air containing minerals from the potable water supply. The humidified air contaminates the auxiliary power unit (APU) and engine fire shutoff switches and may result in mineral build-up on switch contacts. The contamination within the fire shutoff switch gradually builds up, causing an increase in contact resistance. In the case of the thrust reverser, this contact resistance was high enough that the power supplied to the PRSOV was insufficient to hold the valve open. The PRSOV closed, leaving the thrust reverser in the deployed state. This same contamination can build up on the fire extinguishing switch contacts inside the APU and engine fire switches. Mineral build-up on the APU and engine fire shutoff switches, if not corrected, could lead to the switches failing to discharge fire suppressant to the affected fire zone and result in an uncontrolled engine or APU fire and consequent loss of the airplane.

Relevant Service Information

We have reviewed Boeing Alert Service Bulletin 767–26A0127, dated July 17, 2003. The service bulletin describes the following procedures:

1. Doing repetitive functional tests of the APU and engine fire shutoff switches;
2. Doing repetitive replacements of the APU and engine fire shutoff switches with new or serviceable switches; and
3. Deactivating the Lucas (also known as TRW Systemes Aeronautiques) flight deck humidifier, part numbers (P/N) M01AA0101, M01AB0101, M01AB0102, or M01AB0103, which eliminates the need for the repetitive functional tests and replacements.

We have determined that accomplishment of the actions specified in the service information will adequately address the unsafe condition.

FAA's Determination and Requirements of This AD

The unsafe condition described previously is likely to exist or develop on other airplanes of the same type design that may be registered in the U.S. at some time in the future. Therefore, this AD is being issued to prevent mineral build-up on APU and engine fire shutoff switches, which could lead to the switches failing to discharge fire suppressant to the affected fire zone and result in an uncontrolled engine fire and consequent loss of the airplane. This AD requires repetitive functional tests and repetitive replacements of the APU and engine fire shutoff switches. This proposal also provides an optional terminating action for the repetitive functional tests and replacements. You must do these actions in accordance with the service information described previously, except as discussed under ''Differences Between the AD and the Service Bulletin.''

Differences Between the AD and the Service Bulletin

Operators should note that the service bulletin specifies the initial compliance time as ''after the airplane has 12 calendar months of service but within 18 calendar months since airplane delivery. * * *'' This AD, however, specifies the initial compliance time as within 18 months since the date of issuance of the original Airworthiness Certificate or the original Export Certificate of Airworthiness. This decision is based on our determination that ''since airplane delivery'' may be interpreted differently by different operators. We find that this terminology is generally understood within the industry and records will always exist that establish these dates with certainty. This AD also omits reference to ''after the airplane has 12 calendar months of service,'' since accomplishing the initial actions within 18 months of service provides an acceptable level of safety. Thus the compliance time specified in this AD includes any airplanes that may have been operating since delivery.

Operators should also note that the service bulletin states, ''Operators who perform the 90 calendar day inspection and the 18 calendar month switch servicing can avoid the required test interval shown in Figure 1, by deactivation of the Lucas (also known as TRW Systemes Aeronautiques) Flight Deck Humidifier.'' This AD, however, specifies that if an operator deactivates the flight deck humidifier, all APU and engine fire shutoff switches must be

replaced with new or serviceable switches before further flight. We have determined that if a flight deck humidifier is deactivated shortly before any required replacement or required functional test, it might be possible for any switch to have a latent type of failure due to the previous exposure to moisture and minerals from the humidifier. To address this unsafe condition, we have added a requirement to paragraph (j) of this AD to replace all switches after deactivating the flight deck humidifier. We have also added requirements to paragraph (k) of this AD to ensure an operator performs the repetitive functional tests and replacements of switches after reactivating the flight deck humidifier.

Costs of Compliance

None of the airplanes affected by this action are on the U.S. Register. All airplanes affected by this AD are currently operated by non-U.S. operators under foreign registry; therefore, they are not directly affected by this AD action. However, we consider this AD necessary to ensure that the unsafe condition is addressed if any affected airplane is imported and placed on the U.S. Register in the future.

If an affected airplane is imported and placed on the U.S. Register in the future, the required functional test would take about 2 work hours per switch, at an average labor rate of $65 per work hour. We estimate there are 3 switches per airplane. No parts would be required. Based on these figures, the estimated cost of the AD would be $390 per airplane, per testing cycle.

If an affected airplane is imported and placed on the U.S. Register in the future, the required switch replacement would take about 2 work hours per switch, at an average labor rate of $65 per work hour. Required parts would cost about $1,000 per switch, if replaced with a serviceable switch. Based on these figures, the estimated cost of the AD would be $1,130 per switch, per replacement.

FAA's Determination of the Effective Date

No airplane affected by this AD is currently on the U.S. Register. Therefore, providing notice and opportunity for public comment is unnecessary before this AD is issued, and this AD may be made effective in less than 30 days after it is published in the **Federal Register**.

Comments Invited

Although this is a final rule that was not preceded by notice and an opportunity for public comment, we invite you to submit any written relevant data, views, or arguments regarding this AD. Send your comments to an address listed under **ADDRESSES**. Include "Docket No. FAA–2005–20010; Directorate Identifier 2003–NM–224-AD" at the beginning of your comments. We specifically invite comments on the overall regulatory, economic, environmental, and energy aspects of the AD. We will consider all comments received by the closing date and may amend the AD in light of those comments.

We will post all comments we receive, without change, to *http://dms.dot.gov,* including any personal information you provide. We will also post a report summarizing each substantive verbal contact with FAA personnel concerning this AD. Using the search function of our docket Web site, anyone can find and read the comments in any of our dockets, including the name of the individual who sent the comment (or signed the comment on behalf of an association, business, labor union, etc.). You may review the DOT's complete Privacy Act Statement in the **Federal Register** published on April 11, 2000 (65 FR 19477–78), or you may visit *http://dms.dot.gov.*

Authority for This Rulemaking

The FAA's authority to issue rules regarding aviation safety is found in Title 49 of the United States Code. Subtitle I, section 106 describes the authority of the FAA Administrator. Subtitle VII, Aviation Programs, describes in more detail the scope of the agency's authority.

This rulemaking is promulgated under the authority described in subtitle VII, part A, subpart III, section 44701, "General requirements." Under that section, Congress charges the FAA with promoting safe flight of civil aircraft in air commerce by prescribing regulations for practices, methods, and procedures the Administrator finds necessary for safety in air commerce. This regulation is within the scope of that authority because it addresses an unsafe condition that is likely to exist or develop on products identified in this AD.

Regulatory Findings

We have determined that this AD will not have federalism implications under Executive Order 13132. This AD will not have a substantial direct effect on the States, on the relationship between the national Government and the States, or on the distribution of power and responsibilities among the various levels of government.

For the reasons discussed above, I certify that the regulation:

1. Is not a "significant regulatory action" under Executive Order 12866;

2. Is not a "significant rule" under the DOT Regulatory Policies and Procedures (44 FR 11034, February 26, 1979); and

3. Will not have a significant economic impact, positive or negative, on a substantial number of small entities under the criteria of the Regulatory Flexibility Act.

We prepared a regulatory evaluation of the estimated costs to comply with this AD. See the **ADDRESSES** section for a location to examine the regulatory evaluation.

List of Subjects in 14 CFR Part 39

Air transportation, Aircraft, Aviation safety, Incorporation by reference, Safety.

Adoption of the Amendment

■ Accordingly, under the authority delegated to me by the Administrator, the FAA amends 14 CFR part 39 as follows:

PART 39—AIRWORTHINESS DIRECTIVES

■ 1. The authority citation for part 39 continues to read as follows:

Authority: 49 U.S.C. 106(g), 40113, 44701.

§ 39.13 [Amended]

■ 2. The FAA amends § 39.13 by adding the following new AD:

2005–01–13 Boeing: Amendment 39–13938. Docket No. FAA–2005–20010; Directorate Identifier 2003–NM–224–AD.

Effective Date

(a) This airworthiness directive (AD) becomes effective January 28, 2005.

Affected ADs

(b) None.

Applicability

(c) This AD applies to Boeing Model 767–300 series airplanes, certificated in any category; as listed in Boeing Alert Service Bulletin 767–26A0127, dated July 17, 2003.

Unsafe Condition

(d) This AD was prompted by a report of the failure of the engine fire shutoff switch in the engine fire control module. The Federal Aviation Administration is issuing this AD to prevent mineral build-up on the auxiliary power unit (APU) and engine fire shutoff switches, which could lead to the switches failing to discharge fire suppressant to the affected fire zone and result in an uncontrolled engine or APU fire and consequent loss of the airplane.

Compliance

(e) You are responsible for having the actions required by this AD performed within the compliance times specified, unless the actions have already been done.

Service Bulletin Reference

(f) The term ''service bulletin,'' as used in this AD, means the Accomplishment Instructions of Boeing Alert Service Bulletin 767–26A0127, dated July 17, 2003.

Initial and Repetitive Functional Tests

(g) At the later of the compliance times specified in paragraphs (g)(1) and (g)(2) of this AD, do a functional test of the APU and engine fire shutoff switches, in accordance with the service bulletin. Repeat the functional test thereafter at intervals not to exceed 18 months.

(1) Within 18 months since the date of issuance of the original Airworthiness Certificate or the original Export Certificate of Airworthiness.

(2) Within 90 days after the effective date of this AD.

Corrective Action for Failure of a Fire Shutoff Switch

(h) If any APU or engine fire shutoff switch fails during any functional test required by paragraph (g) or (k) of this AD, before further flight, replace the switch with a new or serviceable switch, in accordance with the service bulletin. Repeat the switch replacement thereafter at intervals not to exceed 36 months.

Initial and Repetitive Replacements of Fire Shutoff Switches

(i) Within 18 months after the effective date of this AD, replace all APU and engine fire shutoff switches that have not been previously replaced in accordance with paragraph (h) of this AD with new or serviceable switches, in accordance with the service bulletin. Repeat the switch replacement thereafter at intervals not to exceed 36 months.

Optional Terminating Action: Deactivation of Humidifier

(j) Accomplishment of the actions specified in paragraphs (j)(1) and (j)(2) of this AD, terminates the repetitive requirements of paragraphs (g), (h), and (i) of this AD, except as provided by paragraph (k) of this AD.

(1) Deactivate the Lucas humidifier, part number (P/N) M01AA0101, M01AB0101, M01AB0102, or M01AB0103, in accordance with the service bulletin.

(2) Before further flight following the deactivation specified in paragraph (j)(1) of this AD, replace all APU and engine fire shutoff switches with new or serviceable switches, in accordance with the service bulletin.

Reactivation of Lucas Humidifier

(k) For any airplane on which Lucas humidifier, P/N M01AA0101, M01AB0101, M01AB0102, or M01AB0103, is reactivated after the effective date of this AD: Do the actions required by paragraphs (k)(1) and (k)(2) of this AD at the specified compliance times.

(1) Within 18 months after reactivating the humidifier, and thereafter at intervals not to exceed 18 months, do the functional tests required by paragraph (g) of this AD.

(2) Within 36 months after reactivating the humidifier, and thereafter at intervals not to exceed 36 months, replace all APU and engine fire shutoff switches that have not been previously replaced in accordance with paragraph (h) of this AD. Do the replacements in accordance with paragraph (i) of this AD.

Alternative Methods of Compliance (AMOC)

(l) The Manager, Seattle Aircraft Certification Office, FAA, has the authority to approve AMOCs for this AD, if requested using the procedures found in 14 CFR 39.19.

Material Incorporated by Reference

(m) You must use Boeing Alert Service Bulletin 767–26A0127, dated July 17, 2003, to perform the actions that are required by this AD, unless the AD specifies otherwise. The Director of the Federal Register approved the incorporation by reference of this document in accordance with 5 U.S.C. 552(a) and 1 CFR part 51. You can get copies of the document from Boeing Commercial Airplanes, P.O. Box 3707, Seattle, Washington 98124–2207. You can review copies at the Docket Management Facility office, U.S. Department of Transportation, 400 Seventh Street SW, room PL–401, Nassif Building, Washington, DC; or at the National Archives and Records Administration (NARA). For information on the availability of this material at NARA, call (202) 741–6030, or go to: *http://www.archives.gov/federal_register/code_of_federal_regulations/ibr_locations.html.*

Issued in Renton, Washington, on December 29, 2004.

Kevin M. Mullin,

Acting Manager, Transport Airplane Directorate, Aircraft Certification Service.

[FR Doc. 05–538 Filed 1–12–05; 8:45 am]

BILLING CODE 4910–13–P

DEPARTMENT OF TRANSPORTATION

Federal Aviation Administration

14 CFR Part 71

[Docket No. FAA–2004–19357; Airspace Docket No. 04–AAL–17]

Establishment of Class E Airspace; Annette Island, Metlakatla, AK

AGENCY: Federal Aviation Administration (FAA), DOT.

ACTION: Final rule.

SUMMARY: This action establishes Class E airspace at Annette Island, Metlakatla, AK to provide adequate controlled airspace to contain aircraft executing Special Instrument Approach Procedures. This Rule results in new Class E airspace upward from 700 feet (ft.) above the surface at Annette Island Airport, AK.

DATES: *Effective Date:* 0901 UTC, March 17, 2005.

FOR FURTHER INFORMATION CONTACT: Jesse Patterson, AAL–538G, Federal Aviation Administration, 222 West 7th Avenue, Box 14, Anchorage, AK 99513–7587; telephone number (907) 271–5898; fax: (907) 271–2850; e-mail: *Jesse.ctr.Patterson@faa.gov.* Internet address: *http://www.alaska.faa.gov/at.*

SUPPLEMENTARY INFORMATION:

History

On Wednesday, November 3, 2004, the FAA proposed to revise part 71 of the Federal Aviation Regulations (14 CFR part 71) to create new Class E airspace upward from 700 ft. above the surface at Annette Island, AK (69 FR 63973). The action was proposed in order to establish Class E airspace sufficient in size to contain aircraft while executing Special Instrument Approach Procedures at the Annette Island Airport. New Class E controlled airspace extending upward from 700 ft. above the surface within a 4.5-mile radius of the Annette Island Airport is established by this action. Interested parties were invited to participate in this rulemaking proceeding by submitting written comments on the proposal to the FAA. No public comments have been received, thus, the rule is adopted as proposed.

The area will be depicted on aeronautical charts for pilot reference. The coordinates for this airspace docket are based on North American Datum 83. The Class E airspace areas designated as 700/1200 foot transition areas are published in paragraph 6005 of FAA Order 7400.9M, *Airspace Designations and Reporting Points,* dated August 30, 2004, and effective September 16, 2004, which is incorporated by reference in 14 CFR 71.1. The Class E airspace designation listed in this document will be published subsequently in the Order.

The Rule

This revision to 14 CFR part 71 establishes Class E airspace at Annette Island Airport, Alaska. This additional Class E airspace was created to accommodate aircraft executing Special Instrument Flight Procedures and will be depicted on aeronautical charts for pilot reference. The intended effect of this rule is to provide adequate controlled airspace for IFR operations at Annette Island Airport, Alaska.

The FAA has determined that this regulation only involves an established body of technical regulations for which frequent and routine amendments are necessary to keep them operationally current. It, therefore—(1) is not a ''significant regulatory action'' under Executive Order 12866; (2) is not a ''significant rule'' under DOT Regulatory Policies and Procedures (44 FR 11034; February 26, 1979); and (3)

does not warrant preparation of a regulatory evaluation as the anticipated impact is so minimal. Since this a routine matter that will only affect air traffic procedures and air navigation, it is certified that this rule will not have a significant economic impact on a substantial number of small entities under the criteria of the Regulatory Flexibility Act.

The FAA's authority to issue rules regarding aviation safety is found in Title 49 of the United States Code. Subtitle 1, Section 106 describes the authority of the FAA Administrator. Subtitle VII, Aviation Programs, describes in more detail the scope of the agency's authority.

This rulemaking is promulgated under the authority described in Subtitle VII, Part A, Subpart 1, Section 40103, Sovereignty and use of airspace. Under that section, the FAA is charged with prescribing regulations to ensure the safe and efficient use of the navigable airspace. This regulation is within the scope of that authority because it creates Class E airspace sufficient in size to contain aircraft executing Instrument Approach Procedures for the Annette Island Airport and represents the FAA's continuing effort to safely and efficiently use the navigable airspace.

List of Subjects in 14 CFR Part 71

Airspace, Incorporation by reference, Navigation (air).

Adoption of the Amendment

■ In consideration of the foregoing, the Federal Aviation Administration amends 14 CFR part 71 as follows:

PART 71—DESIGNATION OF CLASS A, CLASS B, CLASS C, CLASS D, AND CLASS E AIRSPACE AREAS; AIRWAYS; ROUTES; AND REPORTING POINTS

■ 1. The authority citation for 14 CFR part 71 continues to read as follows:

Authority: 49 U.S.C. 106(g), 40103, 40113, 40120; E.O. 10854, 24 FR 9565, 3 CFR, 1959–1963 Comp., p. 389.

§ 71.1 [Amended]

■ 2. The incorporation by reference in 14 CFR 71.1 of Federal Aviation Administration Order 7400.9M, *Airspace Designations and Reporting Points,* dated August 30, 2004, and effective September 16, 2004, is amended as follows:

* * * * *

Paragraph 6005 Class E airspace extending upward from 700 feet or more above the surface of the earth.

* * * * *

AAL AK E5 Metlakatla, AK [New]

Annette Island, Airport, AK
(Lat. 55°02′33″ N., long. 131°34′20″ W.)

That airspace extending upward from 700 feet above the surface within a 4.5-mile radius of the Annette Island Airport.

* * * * *

Issued in Anchorage, AK, on January 5, 2005.

Anthony M. Wylie,

Acting Area Director, Alaska Flight Services Area Office.

[FR Doc. 05–667 Filed 1–12–05; 8:45 am]

BILLING CODE 4910–13–P

DEPARTMENT OF TRANSPORTATION

Federal Aviation Administration

14 CFR Part 71

[Docket No. FAA–2004–19358; Airspace Docket No. 04–AAL–18]

Establishment of Class E Airspace; Badami, AK

AGENCY: Federal Aviation Administration (FAA), DOT.

ACTION: Final rule.

SUMMARY: This action establishes Class E airspace at Badami, AK to provide adequate controlled airspace to contain aircraft executing Special Instrument Approach Procedures. This Rule results in new Class E airspace upward from 700 feet (ft.) above the surface at Badami Airport, AK.

Effective Date: 0901 UTC, March 17, 2005.

FOR FURTHER INFORMATION CONTACT: Jesse Patterson, AAL–538G, Federal Aviation Administration, 222 West 7th Avenue, Box 14, Anchorage, AK 99513–7587; telephone number (907) 271–5898; fax: (907) 271–2850; e-mail: *Jesse.ctr.Patterson@faa.gov.* Internet address: *http://www.alaska.faa.gov/at.*

SUPPLEMENTARY INFORMATION:

History

On Wednesday, November 3, 2004, the FAA proposed to revise part 71 of the Federal Aviation Regulations (14 CFR part 71) to create new Class E airspace upward from 700 ft. above the surface at Badami, AK (69 FR 63974). The action was proposed in order to establish Class E airspace sufficient in size to contain aircraft while executing Special Instrument Approach Procedures at the Badami Airport. New Class E controlled airspace extending upward from 700 ft. above the surface within a 6.3-mile radius of the Badami Airport is established by this action. The longitude for the Badami Airport was incorrectly listed in the Notice of Proposed Rulemaking and is corrected in the Final Rule. Interested parties were invited to participate in this rulemaking proceeding by submitting written comments on the proposal to the FAA. No public comments have been received, thus, the rule is adopted as proposed, but with the corrected longitude for the Badami Airport.

The area will be depicted on aeronautical charts for pilot reference. The coordinates for this airspace docket are based on North American Datum 83. The Class E airspace areas designated as 700/1200 foot transition areas are published in paragraph 6005 of FAA Order 7400.9M, *Airspace Designations and Reporting Points,* dated August 30, 2004, and effective September 16, 2004, which is incorporated by reference in 14 CFR 71.1. The Class E airspace designation listed in this document will be published subsequently in the Order.

The Rule

This revision to 14 CFR part 71 establishes Class E airspace at Badami Airport, Alaska. This additional Class E airspace was created to accommodate aircraft executing Special Instrument Flight Procedures and will be depicted on aeronautical charts for pilot reference. The intended effect of this rule is to provide adequate controlled airspace for IFR operations at Badami Airport, Alaska.

The FAA has determined that this regulation only involves an established body of technical regulations for which frequent and routine amendments are necessary to keep them operationally current. It, therefore—(1) is not a ''significant regulatory action'' under Executive Order 12866; (2) is not a ''significant rule'' under DOT Regulatory Policies and Procedures (44 FR 11034; February 26, 1979); and (3) does not warrant preparation of a regulatory evaluation as the anticipated impact is so minimal. Since this a routine matter that will only affect air traffic procedures and air navigation, it is certified that this rule will not have a significant economic impact on a substantial number of small entities under the criteria of the Regulatory Flexibility Act.

The FAA's authority to issue rules regarding aviation safety is found in Title 49 of the United States Code. Subtitle 1, Section 106 describes the authority of the FAA Administrator. Subtitle VII, Aviation Programs, describes in more detail the scope of the agency's authority.

This rulemaking is promulgated under the authority described in Subtitle VII, Part A, Subpart 1, Section

40103, Sovereignty and use of airspace. Under that section, the FAA is charged with prescribing regulations to ensure the safe and efficient use of the navigable airspace. This regulation is within the scope of that authority because it creates Class E airspace sufficient in size to contain aircraft executing Instrument Approach Procedures for the Badami Airport and represents the FAA's continuing effort to safely and efficiently use the navigable airspace.

List of Subjects in 14 CFR Part 71

Airspace, Incorporation by reference, Navigation (air).

Adoption of the Amendment

■ In consideration of the foregoing, the Federal Aviation Administration amends 14 CFR part 71 as follows:

PART 71—DESIGNATION OF CLASS A, CLASS B, CLASS C, CLASS D, AND CLASS E AIRSPACE AREAS; AIRWAYS; ROUTES; AND REPORTING POINTS

■ 1. The authority citation for 14 CFR part 71 continues to read as follows:

Authority: 49 U.S.C. 106(g), 40103, 40113, 40120; E.O. 10854, 24 FR 9565, 3 CFR, 1959–1963 Comp., p. 389.

§ 71.1 [Amended]

■ 2. The incorporation by reference in 14 CFR 71.1 of Federal Aviation Administration Order 7400.9M, *Airspace Designations and Reporting Points,* dated August 30, 2004, and effective September 16, 2004, is amended as follows:

* * * * *

Paragraph 6005 Class E airspace extending upward from 700 feet or more above the surface of the earth.

* * * * *

AAL AK E5 Badami, AK [New]

Badami, Airport, AK
(Lat. 70°08′15″ N., long. 147°01′50″ W.)

That airspace extending upward from 700 feet above the surface within a 6.3-mile radius of the Badami Airport.

* * * * *

Issued in Anchorage, AK, on January 5, 2005.

Anthony M. Wylie,

Acting Area Director, Alaska Flight Services Area Office.

[FR Doc. 05–666 Filed 1–12–05; 8:45 am]

BILLING CODE 4910–13–P

DEPARTMENT OF TRANSPORTATION

Federal Aviation Administration

14 CFR Part 71

[Docket No. FAA–2004–19359; Airspace Docket No. 04–AAL–19]

Establishment of Class E Airspace; Haines, AK

AGENCY: Federal Aviation Administration (FAA), DOT.

ACTION: Final rule.

SUMMARY: This action establishes Class E airspace at Haines, AK to provide adequate controlled airspace to contain aircraft executing Special Instrument Approach Procedures. This Rule results in new Class E airspace upward from 700 feet (ft.) above the surface at Haines Airport, AK.

EFFECTIVE DATE: 0901 UTC, March 17, 2005.

FOR FURTHER INFORMATION CONTACT: Jesse Patterson, AAL–538G, Federal Aviation Administration, 222 West 7th Avenue, Box 14, Anchorage, AK 99513–7587; telephone number (907) 271–5898; fax: (907) 271–2850; e-mail: *Jesse.ctr.Patterson@faa.gov.* Internet address: *http://www.alaska.faa.gov/at.*

SUPPLEMENTARY INFORMATION:

History

On Wednesday, November 3, 2004, the FAA proposed to revise part 71 of the Federal Aviation Regulations (14 CFR part 71) to create new Class E airspace upward from 700 ft. above the surface at Haines, AK (69 FR 63975). The action was proposed in order to establish Class E airspace sufficient in size to contain aircraft while executing Special Instrument Approach Procedures at the Haines Airport. New Class E controlled airspace extending upward from 700 ft. above the surface within a 4-mile radius of the Haines Airport is established by this action. Interested parties were invited to participate in this rulemaking proceeding by submitting written comments on the proposal to the FAA. No public comments have been received, thus, the rule is adopted as proposed.

The area will be depicted on aeronautical charts for pilot reference. The coordinates for this airspace docket are based on North American Datum 83. The Class E airspace areas designated as 700/1200 foot transition areas are published in paragraph 6005 of FAA Order 7400.9M, *Airspace Designations and Reporting Points,* dated August 30, 2004, and effective September 16, 2004, which is incorporated by reference in 14 CFR 71.1. The Class E airspace designation listed in this document will be published subsequently in the Order.

The Rule

This revision to 14 CFR part 71 establishes Class E airspace at Haines Airport, Alaska. This additional Class E airspace was created to accommodate aircraft executing Special Instrument Flight Procedures and will be depicted on aeronautical charts for pilot reference. The intended effect of this rule is to provide adequate controlled airspace for IFR operations at Haines Airport, Alaska.

The FAA has determined that this regulation only involves an established body of technical regulations for which frequent and routine amendments are necessary to keep them operationally current. It, therefore—(1) is not a ''significant regulatory action'' under Executive Order 12866; (2) is not a ''significant rule'' under DOT Regulatory Policies and Procedures (44 FR 11034; February 26, 1979); and (3) does not warrant preparation of a regulatory evaluation as the anticipated impact is so minimal. Since this a routine matter that will only affect air traffic procedures and air navigation, it is certified that this rule will not have a significant economic impact on a substantial number of small entities under the criteria of the Regulatory Flexibility Act.

The FAA's authority to issue rules regarding aviation safety is found in Title 49 of the United States Code. Subtitle 1, Section 106 describes the authority of the FAA Administrator. Subtitle VII, Aviation Programs, describes in more detail the scope of the agency's authority.

This rulemaking is promulgated under the authority described in Subtitle VII, Part A, Subpart 1, Section 40103, Sovereignty and use of airspace. Under that section, the FAA is charged with prescribing regulations to ensure the safe and efficient use of the navigable airspace. This regulation is within the scope of that authority because it creates Class E airspace sufficient in size to contain aircraft executing Instrument Approach Procedures for the Haines Airport and represents the FAA's continuing effort to safely and efficiently use the navigable airspace.

List of Subjects in 14 CFR Part 71

Airspace, Incorporation by reference, Navigation (air).

Adoption of the Amendment

■ In consideration of the foregoing, the Federal Aviation Administration amends 14 CFR part 71 as follows:

PART 71—DESIGNATION OF CLASS A, CLASS B, CLASS C, CLASS D, AND CLASS E AIRSPACE AREAS; AIRWAYS; ROUTES; AND REPORTING POINTS

■ 1. The authority citation for 14 CFR part 71 continues to read as follows:

Authority: 49 U.S.C. 106(g), 40103, 40113, 40120; E.O. 10854, 24 FR 9565, 3 CFR, 1959–1963 Comp., p. 389.

§ 71.1 [Amended]

■ 2. The incorporation by reference in 14 CFR 71.1 of Federal Aviation Administration Order 7400.9M, *Airspace Designations and Reporting Points,* dated August 30, 2004, and effective September 16, 2004, is amended as follows:

* * * * *

Paragraph 6005 Class E airspace extending upward from 700 feet or more above the surface of the earth.

* * * * *

AAL AK E5 Haines, AK [New]

Haines, Airport, AK
(Lat. 59°14′38″ N., long. 135°31′25″ W.)

That airspace extending upward from 700 feet above the surface within a 4-mile radius of the Haines Airport.

* * * * *

Issued in Anchorage, AK, on January 5, 2005.

Anthony M. Wylie,

Acting Area Director, Alaska Flight Services Area Office.

[FR Doc. 05–665 Filed 1–12–05; 8:45 am]

BILLING CODE 4910–13–P

DEPARTMENT OF TRANSPORTATION

Federal Aviation Administration

14 CFR Part 71

[Docket No. FAA–2004–19360; Airspace Docket No. 04–AAL–20]

Establishment of Class E Airspace; Kulik Lake, AK

AGENCY: Federal Aviation Administration (FAA), DOT.

ACTION: Final rule.

SUMMARY: This action establishes Class E airspace at Kulik Lake, AK to provide adequate controlled airspace to contain aircraft executing Special Instrument Approach Procedures. This Rule results in new Class E airspace upward from 700 feet (ft.) above the surface at Kulik Lake Airport, AK.

EFFECTIVE DATE: 0901 UTC, March 17, 2005.

FOR FURTHER INFORMATION CONTACT: Jesse Patterson, AAL–538G, Federal Aviation Administration, 222 West 7th Avenue, Box 14, Anchorage, AK 99513–7587; telephone number (907) 271–5898; fax: (907) 271–2850; email: *Jesse.ctr.Patterson@faa.gov.* Internet address: *http://www.alaska.faa.gov/at.*

SUPPLEMENTARY INFORMATION:

History

On Wednesday, November 3, 2004, the FAA proposed to revise part 71 of the Federal Aviation Regulations (14 CFR part 71) to create new Class E airspace upward from 700 ft. above the surface at Kulik Lake, AK (69 FR 63976). The action was proposed in order to establish Class E airspace sufficient in size to contain aircraft while executing Special Instrument Approach Procedures at the Kulik Lake Airport. New Class E controlled airspace extending upward from 700 ft. above the surface at the Kulik Lake Airport is established by this action. Interested parties were invited to participate in this rulemaking proceeding by submitting written comments on the proposal to the FAA. No public comments have been received, thus, the rule is adopted as proposed.

The area will be depicted on aeronautical charts for pilot reference. The coordinates for this airspace docket are based on North American Datum 83. The Class E airspace areas designated as 700/1200 foot transition areas are published in paragraph 6005 of FAA Order 7400.9M, *Airspace Designations and Reporting Points,* dated August 30, 2004, and effective September 16, 2004, which is incorporated by reference in 14 CFR 71.1. The Class E airspace designation listed in this document will be published subsequently in the Order.

The Rule

This revision to 14 CFR part 71 establishes Class E airspace at Kulik Lake Airport, Alaska. This additional Class E airspace was created to accommodate aircraft executing Special Instrument Flight Procedures and will be depicted on aeronautical charts for pilot reference. The intended effect of this rule is to provide adequate controlled airspace for IFR operations at Kulik Lake Airport, Alaska.

The FAA has determined that this regulation only involves an established body of technical regulations for which frequent and routine amendments are necessary to keep them operationally current. It, therefore—(1) is not a ''significant regulatory action'' under Executive Order 12866; (2) is not a ''significant rule'' under DOT Regulatory Policies and Procedures (44 FR 11034; February 26, 1979); and (3) does not warrant preparation of a regulatory evaluation as the anticipated impact is so minimal. Since this a routine matter that will only affect air traffic procedures and air navigation, it is certified that this rule will not have a significant economic impact on a substantial number of small entities under the criteria of the Regulatory Flexibility Act.

The FAA's authority to issue rules regarding aviation safety is found in Title 49 of the United States Code. Subtitle 1, Section 106 describes the authority of the FAA Administrator. Subtitle VII, Aviation Programs, describes in more detail the scope of the agency's authority.

This rulemaking is promulgated under the authority described in Subtitle VII, Part A, Subpart 1, Section 40103, Sovereignty and use of airspace. Under that section, the FAA is charged with prescribing regulations to ensure the safe and efficient use of the navigable airspace. This regulation is within the scope of that authority because it creates Class E airspace sufficient in size to contain aircraft executing Instrument Approach Procedures for the Kulik Lake Airport and represents the FAA's continuing effort to safely and efficiently use the navigable airspace.

List of Subjects in 14 CFR Part 71

Airspace, Incorporation by reference, Navigation (air).

Adoption of the Amendment

■ In consideration of the foregoing, the Federal Aviation Administration amends 14 CFR part 71 as follows:

PART 71—DESIGNATION OF CLASS A, CLASS B, CLASS C, CLASS D, AND CLASS E AIRSPACE AREAS; AIRWAYS; ROUTES; AND REPORTING POINTS

■ 1. The authority citation for 14 CFR part 71 continues to read as follows:

Authority: 49 U.S.C. 106(g), 40103, 40113, 40120; E.O. 10854, 24 FR 9565, 3 CFR, 1959–1963 Comp., p. 389.

§ 71.1 [Amended]

■ 2. The incorporation by reference in 14 CFR 71.1 of Federal Aviation Administration Order 7400.9M, *Airspace Designations and Reporting Points,* dated August 30, 2004, and

effective September 16, 2004, is amended as follows:

Paragraph 6005 Class E airspace extending upward from 700 feet or more above the surface of the earth.

* * * * *

AAL AK E5 Kulik Lake, AK [New]

Kulik Lake, Airport, AK
(Lat. 58°58′55″ N., long 155°07′17″ W.)

That airspace extending upward from 700 feet above the surface within a 4.3-mile radius of the Kulik Lake Airport and that airspace 4 miles either side of the 098° bearing to the Kukik Lake Airport from the 4.3-mile radius out to 7.5 miles.

* * * * *

Issued in Anchorage, AK, on January 5, 2005.

Anthony M. Wylie,

Acting Area Director, Alaska Flight Services Area Office.

[FR Doc. 05–664 Filed 1–12–05; 8:45 am]

BILLING CODE 4910–13–P

DEPARTMENT OF TRANSPORTATION

Federal Aviation Administration

14 CFR Part 71

[Docket No. FAA–2004–19361; Airspace Docket No. 04–AAL–21]

Establishment of Class E Airspace; Prospect Creek, AK

AGENCY: Federal Aviation Administration (FAA), DOT.

ACTION: Final rule.

SUMMARY: This action establishes Class E airspace at Prospect Creek, AK to provide adequate controlled airspace to contain aircraft executing Special Instrument Approach Procedures. This Rule results in new Class E airspace upward from 700 feet (ft.) above the surface at Prospect Creek Airport, AK.

EFFECTIVE DATE: 0901 UTC, March 17, 2005.

FOR FURTHER INFORMATION CONTACT: Jesse Patterson, AAL–538G, Federal Aviation Administration, 222 West 7th Avenue, Box 14, Anchorage, AK 99513–7587; telephone number (907) 271–5898; fax: (907) 271–2850; email: *Jesse.ctr.Patterson@faa.gov.* Internet address: *http://www.alaska.faa.gov/at.*

SUPPLEMENTARY INFORMATION:

History

On Wednesday, November 3, 2004, the FAA proposed to revise part 71 of the Federal Aviation Regulations (14 CFR part 71) to create new Class E airspace upward from 700 ft. above the surface at Prospect Creek, AK (69 FR 63978). The action was proposed in order to establish Class E airspace sufficient in size to contain aircraft while executing Special Instrument Approach Procedures at the Prospect Creek Airport. New Class E controlled airspace extending upward from 700 ft. above the surface at the Prospect Creek Airport is established by this action. The coordinates for the Prospect Creek Airport and Prospect Creek Non-Directional Beacon (NDB) were incorrectly listed in the Notice of Proposed Rulemaking and are corrected in the Final Rule. Interested parties were invited to participate in this rulemaking proceeding by submitting written comments on the proposal to the FAA. No public comments have been received, thus, the rule is adopted as proposed, but with the corrected coordinates for the Prospect Creek Airport and the Prospect Creek NDB.

The area will be depicted on aeronautical charts for pilot reference. The coordinates for this airspace docket are based on North American Datum 83. The Class E airspace areas designated as 700/1200 foot transition areas are published in paragraph 6005 of FAA Order 7400.9M, *Airspace Designations and Reporting Points,* dated August 30, 2004, and effective September 16, 2004, which is incorporated by reference in 14 CFR 71.1. The Class E airspace designation listed in this document will be published subsequently in the Order.

The Rule

This revision to 14 CFR part 71 establishes Class E airspace at Prospect Creek Airport, Alaska. This additional Class E airspace was created to accommodate aircraft executing Special Instrument Flight Procedures and will be depicted on aeronautical charts for pilot reference. The intended effect of this rule is to provide adequate controlled airspace for IFR operations at Prospect Creek Airport, Alaska.

The FAA has determined that this regulation only involves an established body of technical regulations for which frequent and routine amendments are necessary to keep them operationally current. It, therefore—(1) Is not a ''significant regulatory action'' under Executive Order 12866; (2) is not a ''significant rule'' under DOT Regulatory Policies and Procedures (44 FR 11034; February 26, 1979); and (3) does not warrant preparation of a regulatory evaluation as the anticipated impact is so minimal. Since this a routine matter that will only affect air traffic procedures and air navigation, it is certified that this rule will not have a significant economic impact on a substantial number of small entities under the criteria of the Regulatory Flexibility Act.

The FAA's authority to issue rules regarding aviation safety is found in title 49 of the United States Code. Subtitle 1, section 106 describes the authority of the FAA Administrator. Subtitle VII, Aviation Programs, describes in more detail the scope of the agency's authority.

This rulemaking is promulgated under the authority described in subtitle VII, part A, subpart 1, section 40103, Sovereignty and use of airspace. Under that section, the FAA is charged with prescribing regulations to ensure the safe and efficient use of the navigable airspace. This regulation is within the scope of that authority because it creates Class E airspace sufficient in size to contain aircraft executing Instrument Approach Procedures for the Prospect Creek Airport and represents the FAA's continuing effort to safely and efficiently use the navigable airspace.

List of Subjects in 14 CFR Part 71

Airspace, Incorporation by reference, Navigation (air).

Adoption of the Amendment

■ In consideration of the foregoing, the Federal Aviation Administration amends 14 CFR part 71 as follows:

PART 71—DESIGNATION OF CLASS A, CLASS B, CLASS C, CLASS D, AND CLASS E AIRSPACE AREAS; AIRWAYS; ROUTES; AND REPORTING POINTS

■ 1. The authority citation for 14 CFR part 71 continues to read as follows:

Authority: 49 U.S.C. 106(g), 40103, 40113, 40120; E.O. 10854, 24 FR 9565, 3 CFR, 1959–1963 Comp., p. 389.

§ 71.1 [Amended]

■ 2. The incorporation by reference in 14 CFR 71.1 of Federal Aviation Administration Order 7400.9M, *Airspace Designations and Reporting Points,* dated August 30, 2004, and effective September 16, 2004, is amended as follows:

* * * * *

Paragraph 6005 Class E airspace extending upward from 700 feet or more above the surface of the earth.

* * * * *

AAL AK E5 Prospect Creek, AK [New]

Prospect Creek Airport, AK
(Lat. 66°48′51″ N., long. 150°38′37″ W.)
Prospect Creek NDB
(Lat. 66°49′03″ N., long. 150°38′03″ W.)

That airspace extending upward from 700 feet above the surface within a 4.2-mile radius of the Prospect Creek NDB and that

airspace 4 miles either side of the 096° bearing to the Prospect Creek NDB from the 4.2 mile radius out to 8 miles.

* * * * *

Issued in Anchorage, AK, on January 5, 2005.

Anthony M. Wylie,

Acting Area Director, Alaska Flight Services Area Office.

[FR Doc. 05–663 Filed 1–12–05; 8:45 am]

BILLING CODE 4910–13–P

DEPARTMENT OF TRANSPORTATION

Federal Aviation Administration

14 CFR Part 71

[Docket No. FAA–2004–19362; Airspace Docket No. 04–AAL–22]

Establishment of Class E Airspace; Red Dog, AK

AGENCY: Federal Aviation Administration (FAA), DOT.

ACTION: Final rule.

SUMMARY: This action establishes Class E airspace at Red Dog, AK to provide adequate controlled airspace to contain aircraft executing Special Instrument Approach Procedures. This Rule results in new Class E airspace upward from 700 feet (ft.) and 1,200 ft., above the surface at Red Dog Airport, AK.

EFFECTIVE DATE: 0901 UTC, March 17, 2005.

FOR FURTHER INFORMATION CONTACT: Jesse Patterson, AAL–538G, Federal Aviation Administration, 222 West 7th Avenue, Box 14, Anchorage, AK 99513–7587; telephone number (907) 271–5898; fax: (907) 271–2850; email: *Jesse.ctr.Patterson@faa.gov.* Internet address: *http://www.alaska.faa.gov/at.*

SUPPLEMENTARY INFORMATION:

History

On Wednesday, November 3, 2004, the FAA proposed to revise part 71 of the Federal Aviation Regulations (14 CFR part 71) to create new Class E airspace upward from 700 ft. and 1,200 ft. above the surface at Red Dog, AK (69 FR 63970). The action was proposed in order to establish Class E airspace sufficient in size to contain aircraft while executing Special Instrument Approach Procedures at the Red Dog Airport. New Class E controlled airspace extending upward from 700 ft. and 1,200 ft. above the surface at the Red Dog Airport is established by this action. Interested parties were invited to participate in this rulemaking proceeding by submitting written comments on the proposal to the FAA. No public comments have been received, thus, the rule is adopted as proposed.

The area will be depicted on aeronautical charts for pilot reference. The coordinates for this airspace docket are based on North American Datum 83. The Class E airspace areas designated as 700/1200 foot transition areas are published in paragraph 6005 of FAA Order 7400.9M, *Airspace Designations and Reporting Points,* dated August 30, 2004, and effective September 16, 2004, which is incorporated by reference in 14 CFR 71.1. The Class E airspace designation listed in this document will be published subsequently in the Order.

The Rule

This revision to 14 CFR part 71 establishes Class E airspace at Red Dog Airport, Alaska. This additional Class E airspace was created to accommodate aircraft executing Special Instrument Flight Procedures and will be depicted on aeronautical charts for pilot reference. The intended effect of this rule is to provide adequate controlled airspace for IFR operations at Red Dog Airport, Alaska.

The FAA has determined that this regulation only involves an established body of technical regulations for which frequent and routine amendments are necessary to keep them operationally current. It, therefore—(1) Is not a ''significant regulatory action'' under Executive Order 12866; (2) is not a ''significant rule'' under DOT Regulatory Policies and Procedures (44 FR 11034; February 26, 1979); and (3) does not warrant preparation of a regulatory evaluation as the anticipated impact is so minimal. Since this a routine matter that will only affect air traffic procedures and air navigation, it is certified that this rule will not have a significant economic impact on a substantial number of small entities under the criteria of the Regulatory Flexibility Act.

The FAA's authority to issue rules regarding aviation safety is found in title 49 of the United States Code. Subtitle 1, section 106 describes the authority of the FAA Administrator. Subtitle VII, Aviation Programs, describes in more detail the scope of the agency's authority.

This rulemaking is promulgated under the authority described in subtitle VII, part A, subpart 1, section 40103, Sovereignty and use of airspace. Under that section, the FAA is charged with prescribing regulations to ensure the safe and efficient use of the navigable airspace. This regulation is within the scope of that authority because it creates Class E airspace sufficient in size to contain aircraft executing Instrument Approach Procedures for the Red Dog Airport and represents the FAA's continuing effort to safely and efficiently use the navigable airspace.

List of Subjects in 14 CFR Part 71

Airspace, Incorporation by reference, Navigation (air).

Adoption of the Amendment

■ In consideration of the foregoing, the Federal Aviation Administration amends 14 CFR part 71 as follows:

PART 71—DESIGNATION OF CLASS A, CLASS B, CLASS C, CLASS D, AND CLASS E AIRSPACE AREAS; AIRWAYS; ROUTES; AND REPORTING POINTS

■ 1. The authority citation for 14 CFR part 71 continues to read as follows:

Authority: 49 U.S.C. 106(g), 40103, 40113, 40120; E.O. 10854, 24 FR 9565, 3 CFR, 1959–1963 Comp., p. 389.

§ 71.1 [Amended]

■ 2. The incorporation by reference in 14 CFR 71.1 of Federal Aviation Administration Order 7400.9M, *Airspace Designations and Reporting Points,* dated August 30, 2004, and effective September 16, 2004, is amended as follows:

* * * * *

Paragraph 6005 Class E airspace extending upward from 700 feet or more above the surface of the earth.

* * * * *

AAL AK E5 Red Dog, AK [New]

Red Dog, Airport, AK

(Lat. 68°01′53″ N., long. 162°54′11″ W.)

That airspace extending upward from 700 feet above the surface within a 6.3-mile radius of the Red Dog Airport and that airspace extending upward from 1,200 feet above the surface within a 14-mile radius of the Red Dog Airport.

* * * * *

Issued in Anchorage, AK, on January 5, 2005.

Anthony M. Wylie,

Acting Area Director, Alaska Flight Services Area Office.

[FR Doc. 05–662 Filed 1–12–05; 8:45 am]

BILLING CODE 4910–13–P

DEPARTMENT OF TRANSPORTATION

Federal Aviation Administration

14 CFR Part 71

[Docket No. FAA–2004–19363; Airspace Docket No. 04–AAL–23]

Establishment of Class E Airspace; Seward, AK

AGENCY: Federal Aviation Administration (FAA), DOT.

ACTION: Final rule.

SUMMARY: This action establishes Class E airspace at Seward, AK to provide adequate controlled airspace to contain aircraft executing Special Instrument Approach Procedures. This Rule results in new Class E airspace upward from 700 feet (ft.) above the surface at Seward Airport, AK.

EFFECTIVE DATE: 0901 UTC, March 17, 2005.

FOR FURTHER INFORMATION CONTACT: Jesse Patterson, AAL–538G, Federal Aviation Administration, 222 West 7th Avenue, Box 14, Anchorage, AK 99513–7587; telephone number (907) 271–5898; fax: (907) 271–2850; email: *Jesse.ctr.Patterson@faa.gov.* Internet address: *http://www.alaska.faa.gov/at.*

SUPPLEMENTARY INFORMATION:

History

On Wednesday, November 3, 2004, the FAA proposed to revise part 71 of the Federal Aviation Regulations (14 CFR part 71) to create new Class E airspace upward from 700 ft. above the surface at Seward, AK (69 FR 63972). The action was proposed in order to establish Class E airspace sufficient in size to contain aircraft while executing Special Instrument Approach Procedures at the Seward Airport. New Class E controlled airspace extending upward from 700 ft. above the surface within a 4-mile radius of the Seward Airport is established by this action. Interested parties were invited to participate in this rulemaking proceeding by submitting written comments on the proposal to the FAA. No public comments have been received, thus, the rule is adopted as proposed.

The area will be depicted on aeronautical charts for pilot reference. The coordinates for this airspace docket are based on North American Datum 83. The Class E airspace areas designated as 700/1200 foot transition areas are published in paragraph 6005 of FAA Order 7400.9M, *Airspace Designations and Reporting Points,* dated August 30, 2004, and effective September 16, 2004, which is incorporated by reference in 14 CFR 71.1. The Class E airspace designation listed in this document will be published subsequently in the Order.

The Rule

This revision to 14 CFR part 71 establishes Class E airspace at Seward Airport, Alaska. This additional Class E airspace was created to accommodate aircraft executing Special Instrument Flight Procedures and will be depicted on aeronautical charts for pilot reference. The intended effect of this rule is to provide adequate controlled airspace for IFR operations at Seward Airport, Alaska.

The FAA has determined that this regulation only involves an established body of technical regulations for which frequent and routine amendments are necessary to keep them operationally current. It, therefore—(1) is not a ''significant regulatory action'' under Executive Order 12866; (2) is not a ''significant rule'' under DOT Regulatory Policies and Procedures (44 FR 11034; February 26, 1979); and (3) does not warrant preparation of a regulatory evaluation as the anticipated impact is so minimal. Since this a routine matter that will only affect air traffic procedures and air navigation, it is certified that this rule will not have a significant economic impact on a substantial number of small entities under the criteria of the Regulatory Flexibility Act.

The FAA's authority to issue rules regarding aviation safety is found in title 49 of the United States Code. Subtitle 1, section 106 describes the authority of the FAA Administrator. Subtitle VII, Aviation Programs, describes in more detail the scope of the agency's authority.

This rulemaking is promulgated under the authority described in subtitle VII, part A, subpart 1, section 40103, Sovereignty and use of airspace. Under that section, the FAA is charged with prescribing regulations to ensure the safe and efficient use of the navigable airspace. This regulation is within the scope of that authority because it creates Class E airspace sufficient in size to contain aircraft executing Instrument Approach Procedures for the Seward Airport and represents the FAA's continuing effort to safely and efficiently use the navigable airspace.

List of Subjects in 14 CFR Part 71

Airspace, Incorporation by reference, Navigation (air).

Adoption of the Amendment

■ In consideration of the foregoing, the Federal Aviation Administration amends 14 CFR part 71 as follows:

PART 71— DESIGNATION OF CLASS A, CLASS B, CLASS C, CLASS D, AND CLASS E AIRSPACE AREAS; AIRWAYS; ROUTES; AND REPORTING POINTS

■ 1. The authority citation for 14 CFR part 71 continues to read as follows:

Authority: 49 U.S.C. 106(g), 40103, 40113, 40120; E.O. 10854, 24 FR 9565, 3 CFR, 1959–1963 Comp., p. 389.

§ 71.1 [Amended]

■ 2. The incorporation by reference in 14 CFR 71.1 of Federal Aviation Administration Order 7400.9M, *Airspace Designations and Reporting Points,* dated August 30, 2004, and effective September 16, 2004, is amended as follows:

* * * * *

Paragraph 6005 Class E airspace extending upward from 700 feet or more above the surface of the earth.

* * * * *

AAL AK E5 Seward, AK [New]

Seward, Airport, AK
(Lat. 60°07′37″ N., long. 149°25′08″ W.)

That airspace extending upward from 700 feet above the surface within a 4-mile radius of the Seward Airport.

* * * * *

Issued in Anchorage, AK, on January 5, 2005.

Anthony M. Wylie,

Acting Area Director, Alaska Flight Services Area Office.

[FR Doc. 05–661 Filed 1–12–05; 8:45 am]

BILLING CODE 4910–13–P

DEPARTMENT OF COMMERCE

Bureau of Industry and Security

15 CFR Parts 742 and 774

[Docket No. 041221359–5005–02]

RIN 0694–AD25

Implementation of the Understandings Reached at the June 2004 Australia Group (AG) Plenary Meeting and Through a Subsequent AG Intersessional Decision; Correction

AGENCY: Bureau of Industry and Security, Commerce.

ACTION: Final rule; correction.

SUMMARY: On Wednesday, December 29, 2004, the Bureau of Industry and

Security (BIS) published a final rule that amended the Export Administration Regulations (EAR) to implement the understandings reached at the June 2004 plenary meeting of the Australia Group (AG) and through a subsequent AG intersessional decision. The December 29, 2004, final rule contained a typographical error in the description of the AG-related license requirements in the EAR, as well as an error in the amendatory language for ECCN 2B351, which controls certain toxic gas monitoring systems and dedicated detectors therefor. This document corrects those errors.

DATES: This rule is effective January 13, 2005.

FOR FURTHER INFORMATION CONTACT: For questions of a general nature, contact Willard Fisher, Regulatory Policy Division, Office of Exporter Services, Bureau of Industry and Security at (202) 482–2440 or e-mail *wfisher@bis.doc.gov.* For questions concerning the AG-related license requirements in the EAR, contact Douglas Brown, Office of Nonproliferation Controls and Treaty Compliance, Bureau of Industry and Security, Telephone: (202) 482–7900.

SUPPLEMENTARY INFORMATION:

Background

This document corrects the errors contained in the final rule that was published by the Bureau of Industry and Security (BIS) on December 29, 2004 (69 FR 77890). The December 29, 2004, final rule amended the Export Administration Regulations (EAR) to implement the understandings reached at, and subsequent to, the annual plenary meeting of the Australia Group (AG) that was held in Paris on June 7–10, 2004.

Specifically, this document corrects a minor typographical error contained in § 742.2, which describes the AG-related license requirements in the EAR. This document corrects paragraph (a)(3)(i) in § 742.2 of the EAR by replacing the period at the end of the paragraph with a semicolon.

This document also corrects an error contained in Export Control Classification Number (ECCN) 2B351 on the Commerce Control List (CCL) (Supplement No. 1 to Part 774 of the EAR). In the December 29, 2004, final rule, the amendatory instruction for ECCN 2B351 did not specify that the heading of the ECCN should be revised to read as set forth in the regulatory text for that ECCN. The regulatory text in the December 29, 2004, final rule contained the following revised heading for ECCN 2B351: ''Toxic gas monitoring systems that operate on-line and dedicated detectors therefor, except those systems and detectors controlled by ECCN 1A004.c.'' This document corrects ECCN 2B351 by revising the heading to include the phrase that excludes systems and detectors controlled by ECCN 1A004.c.

Rulemaking Requirements

1. This rule has been determined to be not significant for purposes of Executive Order 12866.

2. Notwithstanding any other provision of law, no person is required to respond to, nor shall any person be subject to a penalty for failure to comply with, a collection of information subject to the requirements of the Paperwork Reduction Act of 1995 (44 U.S.C. 3501 *et seq.*) (PRA), unless that collection of information displays a currently valid Office of Management and Budget (OMB) Control Number. This rule contains a collection of information subject to the requirements of the PRA. This collection has been approved by OMB under Control Number 0694–0088 (Multi-Purpose Application), which carries a burden hour estimate of 58 minutes to prepare and submit form BIS–748. Send comments regarding this burden estimate or any other aspect of this collection of information, including suggestions for reducing the burden, to David Rostker, Office of Management and Budget (OMB), by e-mail to *David_Rostker@omb.eop.gov,* or by fax to (202) 395–7285; and to the Regulatory Policy Division, Bureau of Industry and Security, Department of Commerce, PO Box 273, Washington, DC 20044.

3. This rule does not contain policies with Federalism implications as that term is defined in Executive Order 13132.

4. The provisions of the Administrative Procedure Act (5 U.S.C. 553) requiring notice of proposed rulemaking, the opportunity for public participation, and a delay in effective date, are inapplicable because this regulation involves a military and foreign affairs function of the United States (5 U.S.C. 553(a)(1)). Further, no other law requires that a notice of proposed rulemaking and an opportunity for public comment be given for this final rule. Because a notice of proposed rulemaking and an opportunity for public comment are not required to be given for this rule under 5 U.S.C. 553 or by any other law, the analytical requirements of the Regulatory Flexibility Act (5 U.S.C. 601 *et seq.*) are not applicable.

Therefore, this regulation is issued in final form. Although there is no formal comment period, public comments on this regulation are welcome on a continuing basis. Comments should be submitted to Willard Fisher, Regulatory Policy Division, Bureau of Industry and Security, U.S. Department of Commerce, Room 2705, 14th Street and Pennsylvania Avenue, NW., Washington, DC 20230.

List of Subjects

15 CFR Part 742

Exports, Foreign trade.

15 CFR Part 774

Exports, Foreign trade, Reporting and recordkeeping requirements.

■ Accordingly, parts 742 and 774 of the Export Administration Regulations (15 CFR parts 730–799) are amended as follows:

PART 742—[CORRECTED]

■ 1. The authority citation for 15 CFR part 742 continues to read as follows:

Authority: 50 U.S.C. app. 2401 *et seq.*; 50 U.S.C. 1701 *et seq.*; 18 U.S.C. 2510 *et seq.*; 22 U.S.C. 3201 *et seq.*; 42 U.S.C. 2139a; Sec. 901–911, Pub. L. 106–387; Sec. 221, Pub. L. 107–56; Sec. 1503, Pub. L. 108–11, 117 Stat. 559; E.O. 12058, 43 FR 20947, 3 CFR, 1978 Comp., p. 179; E.O. 12851, 58 FR 33181, 3 CFR, 1993 Comp., p. 608; E.O. 12938, 59 FR 59099, 3 CFR, 1994 Comp., p. 950; E.O. 13026, 61 FR 58767, 3 CFR, 1996 Comp., p. 228; E.O. 13222, 66 FR 44025, 3 CFR, 2001 Comp., p. 783; Presidential Determination 2003–23 of May 7, 2003, 68 FR 26459, May 16, 2003; Notice of October 29, 2003, 68 FR 62209, 3 CFR, 2003 Comp., p. 347; Notice of August 6, 2004, 69 FR 48763 (August 10, 2004).

§ 742.2 [Amended]

■ 2. Section 742.2 is amended by removing the period (''.'') at the end of paragraph (a)(3)(i) and adding a semicolon ('';'') at the end of the paragraph.

PART 774—[CORRECTED]

■ 3. The authority citation for 15 CFR part 774 continues to read as follows:

Authority: 50 U.S.C. app. 2401 *et seq.*; 50 U.S.C. 1701 *et seq.*; 10 U.S.C. 7420; 10 U.S.C. 7430(e); 18 U.S.C. 2510 *et seq.*; 22 U.S.C. 287c; 22 U.S.C. 3201 *et seq.*; 22 U.S.C. 6004; 30 U.S.C. 185(s), 185(u); 42 U.S.C. 2139a; 42 U.S.C. 6212; 43 U.S.C. 1354; 46 U.S.C. app. 466c; 50 U.S.C. app. 5; Sec. 901–911, Pub. L. 106–387; Sec. 221, Pub. L. 107–56; E.O. 13026, 61 FR 58767, 3 CFR, 1996 Comp., p. 228; E.O. 13222, 66 FR 44025, 3 CFR, 2001 Comp., p. 783; Notice of August 6, 2004, 69 FR 48763 (August 10, 2004).

Supplement No. 1 to Part 774 [Amended]

■ 4. In Supplement No. 1 to Part 774 (the Commerce Control List), Category 2—Materials Processing, ECCN 2B351 is

amended by revising the ECCN heading to read as follows:

2B351 Toxic gas monitoring systems that operate on-line and dedicated detectors therefor, except those systems and detectors controlled by ECCN 1A004.c.

* * * * *

Dated: January 10, 2005.

Eileen Albanese,

Director, Office of Exporter Services.

[FR Doc. 05–719 Filed 1–12–05; 8:45 am]

BILLING CODE 3510–33–P

COMMODITY FUTURES TRADING COMMISSION

17 CFR Part 171

RIN 3038–AC12

Rules Relating to Review of National Futures Association Decisions in Disciplinary, Membership Denial, Registration and Member Responsibility Actions

AGENCY: Commodity Futures Trading Commission.

ACTION: Final rule.

SUMMARY: The Commodity Futures Trading Commission (''Commission'' or ''CFTC'') hereby amends its rules relating to the scope of Commission review of National Futures Association (''NFA'') decisions in disciplinary, membership denial, registration and member responsibility actions. First, the Commission makes a technical amendment to add the NFA's Hearing Committee to the list of committees covered by that section. This change conforms Rule 171.1(b)(4) to changes in NFA's committee structure since part 171 was first adopted in October 1990. Secondly, the Commission adds a new provision to exclude from Commission review any appeal concerning NFA suspension of a member for failing to pay settlement or arbitration award (''award suspension cases'') unless there are extraordinary circumstances that would otherwise warrant Commission review.

DATES: Effective January 13, 2005.

FOR FURTHER INFORMATION CONTACT: Thuy Dinh or Gail Scott, Office of the General Counsel, Commodity Futures Trading Commission, Three Lafayette Centre, 1155 21st Street, NW., Washington, DC 20581. Telephone: (202) 418–5120.

SUPPLEMENTARY INFORMATION:

I. Scope of Commission Review

On June 15, 1990, the Commission published proposed rules establishing standards and procedures for its review of decisions of registered futures associations such as NFA in disciplinary actions, membership denial actions, registration actions and member responsibility actions. 55 FR 24254. Under the proposed rules, two categories of decisions were excluded from Commission review: (a) Disciplinary decisions in which the aggrieved party failed to pursue his or her appeal rights to the NFA Appeals Committee and no extraordinary circumstances warranted Commission review; and (b) decisions in arbitration actions. See 171.1(b)(1) and 171.1(b)(2), respectively. Two comment letters were received in response to the request for public comment. Of particular interest to the Commission was a letter it received from the NFA.[1]

In its letter, the NFA proposed that the Commission exclude any appeal arising from NFA suspension of an association member based solely on that member's failure to pay NFA dues or arbitration awards.[2] In its final rules published on October 9, 1990, the Commission agreed that the suspension for non-payment of dues should not generally be considered a disciplinary action subject to Commission review and accordingly amended the proposed rules by adding 171.1(b)(3) under ''*Matters excluded*'' in the publication of its final rules. *See* 55 FR 41061. However, the Commission specifically rejected NFA's request to exclude from Commission review the suspension of a member for failing to pay arbitration awards, stating:

> The Commission is reluctant at this time * * * to exclude suspension of a member for failing to pay arbitration awards. When the Commission has excluded NFA arbitration decisions themselves from its review, one of the reasons it has done so is that these decisions can be reversed in the court system. In contrast, membership suspension raises somewhat different issues which generally go to the core of the Commission's role in reviewing NFA actions affecting membership status. Pending additional experience on the issue the Commission has determined not to exclude such NFA action from its appellate jurisdiction.

Id. at 41064.

From 1990 to the present, the Commission has received a total of five appeals related to the suspension of a member for failing to pay an arbitration award. The Commission first considered this issue in 1991, shortly after Part 171 was adopted. In the initial case, the respondent asked the Commission to stay the suspension while he worked out a payment schedule. In rejecting the petition, the Commission stated, ''NFA's ministerial imposition of a pre-determined sanction for a member's failure to perform an undisputed duty of membership [to pay an arbitration award] is not, without more, a proper subject for Commission review.'' *Machin* v. *NFA,* [1990–1992 Transfer Binder] Comm. Fut. L. Rep. (CCH) ¶ 25,041 at 37,893 (CFTC Apr. 25, 1991).

There were no other appeals of this nature until 1997, when the Commission dismissed an appeal from an award suspension where the appeal was predicated on alleged procedural and substantive errors in the underlying arbitration. The Commission stated, ''it would be inappropriate to consider either procedural or substantive errors in NFA's resolution of the issues raised in the arbitration.'' *Indelicato* v. *NFA,* [1996–1998 Transfer Binder] Comm. Fut. L. Rep. (CCH) ¶ 27,130 at 45,287 (CFTC Aug. 7, 1997). Citing *Machin,* the Commission further noted, ''the imposition of a suspension for failing to pay an arbitration award might be reviewable upon a showing that NFA acted arbitrarily in imposing the suspension. Here, however, as in *Machin,* petitioners have failed to establish such arbitrariness.'' *Id.*

The Commission's denials of review in three recent cases, from March 2003 to February 2004, have followed *Machin* and *Indelicato*, *i.e.*, declining to accept any appeal from this type of suspension unless it ''involves something more than the ministerial application of a pre-determined sanction.'' *See Howell* v. *NFA,* [Current Transfer Binder] Comm. Fut. L. Rep. (CCH) ¶ 29,702 at 55,993 (CFTC Feb. 27, 2004); *Mawhorr* v. *NFA,* [Current Transfer Binder] Comm. Fut. L. Rep. (CCH) ¶ 29,633 at 55,717 (CFTC Nov. 28, 2003); *Bunyard* v. *NFA,* CRAA 03–01 (CFTC Mar. 5, 2003). In *Bunyard,* the Commission stated, ''[only] an appeal raising a colorable claim that the NFA acted arbitrarily—or a similar claim that goes to the core of the Commission's role in ensuring the reliability of NFA's membership

[1] August 31, 1990 NFA Letter (''NFA Letter'').

[2] The NFA presumed that ''actions in these areas would not be deemed disciplinary actions'' within Commission review under Part 171. NFA Letter at 7. Section 10(g) of NFA's Code of Arbitration (Code) and Section 10(g) of NFA's Member Arbitration Rules (Member Rules) authorize NFA to summarily suspend an NFA member or associate if such member or associate fails to pay an NFA award or settlement reached in an NFA arbitration or mediation proceeding within 30 days. Members and associates receive a 30-day written notice before the suspension becomes effective, giving them a minimum of 60 days to satisfy the award or settlement. Once the suspension becomes effective, a member or associate can get it lifted at any time by paying the amount due. A member or associate can also file a motion to vacate the award. A timely motion to vacate an award stays the suspension while the motion is pending in a court of competent jurisdiction.

process—would fall within our jurisdiction.'' *Id.* at 2.

Against this backdrop, the NFA this year again proposed that the Commission exclude from its jurisdiction membership suspension cases based solely on the members' failure to pay arbitration awards. *See* April 15, 2004 NFA Letter at 5. The NFA discussed the Commission's disposition of these types of appeals during the last 14 years. Noting that the Commission had routinely rejected such appeals, the NFA proposed that the Part 171 Rules be amended to reflect the Commission's actual practice, which is to limit review to cases presenting ''extraordinary circumstances.'' *Id.* at 4.

In its notice of proposed rulemaking, the Commission noted that it had reviewed its case history in this area and reached the following conclusions: (a) Such appeals are very infrequent; and (b) the few cases that have reached the Commission did not raise a colorable challenge to the fundamental fairness of the proceeding, and fell squarely into the ''ministerial'' category that would not warrant Commission review. Based on this experience, the Commission proposed to exclude these routine matters from appellate review. The Commission proposed to exercise its appellate jurisdiction in the extraordinary case where an appeal based on an award suspension involved ''something more than a ministerial application of a predetermined sanction.'' The proposed rule incorporated the Commission's language used in *Machin* and *Indelicato.*

The notice for the proposed rule was published in the **Federal Register** on October 25, 2004, providing a thirty-day comment period. On November 17, 2004, Mr. Thomas Sexton, NFA Vice President and General Counsel, wrote to the Commission endorsing the proposed amendment. Reviewing NFA arbitration cases of the past 14 years, the letter noted the following statistics:

> Since November 1, 1990, when Part 171 became effective, NFA has closed approximately 2750 arbitration cases. Approximately 450 of these cases have resulted in awards against Members and Associates. Approximately 1150 more of these cases settled since June 1, 1993, when we added unpaid settlements to the suspension rules. These 1600 cases generated only 61 suspensions, and only five of those have been appealed to the Commission. The Commission denied review in each of these five cases, ruling that the ministerial imposition of a predetermined sanction is not a proper subject for Commission review. Nonetheless, in each one of these cases the Commission and NFA—as well as the suspended Member or Associate—expended significant resources on the appeal.

Sexton Letter at 1.

The letter concluded that the Commission's amendments will not eliminate existing rights, but ''will clarify the current practice * * * and conserve resources * * * that * * * would otherwise [be] waste[d] on appeals that will not be accepted for review.'' *Id.* at 2. The letter further acknowledged that the Commission amendments, in choosing to review only cases in which an NFA Member or Associate has a colorable claim that NFA acted arbitrarily or if other extraordinary circumstances exist, provide Members and Associates with an adequate remedy against unreasonable suspensions. *Id.* In essence, the letter reiterated the Commission's objectives for instituting the amendments.

The Commissioner received no other comment from the public. The comment period ended on November 24, 2004.

II. Technical Amendment

Commission Rule 1.63 bars persons with certain disciplinary histories from serving on ''a disciplinary committee'' or in other leadership positions of any self-regulatory organization. Rule 171.1(b)(4) provides that NFA decisions made pursuant to Rule 1.63 are excluded from Commission review. As currently written, it forecloses appeals by an NFA member who is disqualified from service on NFA's ''Board of Directors, Business Conduct Committees or arbitration panels.'' Since Rule 171.1(b)(4) was promulgated, NFA has established a Hearing Committee as part of its disciplinary function. The Commission is making a technical amendment to Rule 171.1(b)(4) to add the Hearing Committee to the list of committees covered by the rule.

III. Related Matters

A. Regulatory Flexibility Act

The Regulatory Flexibility Act (''RFA''), 5 U.S.C. 601 *et seq.,* requires agencies with rulemaking authority to consider the impact those rules will have on small businesses. With respect to persons seeking Commission reviews of NFA adjudicatory decisions, the amendments would impose no additional regulatory burden. Commission review of NFA disciplinary and membership denial actions has been carried out pursuant to 17 CFR Part 171 since 1990. These amendments do not present any significant changes and would in fact ease the regulatory burden to some extent by providing greater certainty and predictability concerning the standards and procedures governing such review. Accordingly, the Acting Chairman, on behalf of the Commission, hereby certifies, pursuant to 5 U.S.C. 605(b), that the amendments will not have a significant economic impact on a substantial number of small businesses.

B. Paperwork Reduction Act

The amendments to Part 171 rules do not impose a burden within the meaning and intent of the Paperwork Reduction Act of 1980, 44 U.S.C. 3501, *et seq.*

C. Cost-Benefit Analysis

Section 15(a) of the Commodity Exchange Act, 7 U.S.C. 19(a), requires the Commission to consider the costs and benefits of its action before issuing a new regulation. The Commission understands that, by its terms, Section 15(a) does not require the Commission to quantify the costs and benefits of a new regulation or to determine whether the benefits of the proposed regulation outweigh its costs. Nor does it require that each proposed rule be analyzed in isolation when that rule is a component of a larger package of rules or rule revisions. Rather, section 15(a) simply requires the Commission to ''consider the costs and benefits'' of its action.

Section 15(a) further specifies that costs and benefits shall be evaluated in light of five broad areas of market and public concern: (1) Protection of market participants and the public; (2) efficiency, competitiveness, and financial integrity of futures markets; (3) price discovery; (4) sound risk management practices; and (5) other public interest considerations. Accordingly, the Commission can, in its discretion, give greater weight to any one of the five enumerated areas of concern and can, in its discretion, determine that notwithstanding its costs, a particular rule is necessary or appropriate to protect the public interest or to effectuate any of the provisions, or accomplish any of the purposes, of the Commodity Exchange Act.

The amendments to Part 171 will not create any significant change in the Commission's appellate process. In fact, the amendments should enhance the protection of market participants and the public by excluding from the Commission's review matters that represent routine enforcement of a NFA pre-determined sanction, freeing both the Commission's and NFA's resources. In addition, since the amendments retain the Commission's ability to consider appeals that present ''extraordinary circumstances,'' public interest considerations for fundamental fairness and the Commission's supervisory authority regarding self-

regulated organizations will not be compromised.

After considering these factors, the Commission has determined to amend Part 171, as set forth below.

List of Subjects in 17 CFR Part 171

Administrative practice and procedure, Commodity exchanges, Commodity futures.

■ In consideration of the following, the Commission hereby amends chapter I of title 17 of the Code of Federal Regulations as follows:

PART 171—RULES RELATING TO REVIEW OF NATIONAL FUTURES ASSOCIATION DECISIONS IN DISCIPLINARY, MEMBERSHIP DENIAL, REGISTRATION AND MEMBER RESPONSIBILITY ACTIONS

■ 1. The authority citation for part 171 continues to read as follows:

Authority: 7 U.S.C. 4a, 12a, and 21.

■ 2. Section 171.1(b) is amended in paragraph (b)(4) by adding ‘‘, Hearing Committee’’ between ‘‘Business Conduct Committees’’ and ‘‘or arbitration panels’’; and replacing ‘‘.’’ with ‘‘;’’ at the end of (b)(4); and by adding new paragraph (b)(5):

§ 171.1 Scope of rules.

* * * * *

(b) * * *

(5) Suspension of a member or a person associated with a member based solely on that person’s failure to pay an arbitration award or a settlement agreement resulting from an arbitration action brought pursuant to section 17(b)(10) of the Act or rules and regulations of the National Futures Association, or a settlement agreement resulting from a mediation proceeding sponsored by the National Futures Association, unless there are extraordinary circumstances that involve something more than the ministerial application of a predetermined sanction, or raise a colorable claim that the National Futures Assocaition has acted arbitrarily.

* * * * *

Issued in Washington, DC on the 10th day of January 2005, by the Commission.

Jean A. Webb,

Secretary of the Commission.

[FR Doc. 05–709 Filed 1–12–05; 8:45 am]

BILLING CODE 6351–01–M

DEPARTMENT OF HEALTH AND HUMAN SERVICES

Food and Drug Administration

21 CFR Part 510

New Animal Drugs; Change of Sponsor’s Address

AGENCY: Food and Drug Administration, HHS.

ACTION: Final rule.

SUMMARY: The Food and Drug Administration (FDA) is amending the animal drug regulations to reflect a change of sponsor’s address for Alstoe, Ltd.

DATES: This rule is effective January 13, 2005.

FOR FURTHER INFORMATION CONTACT: David R. Newkirk, Center for Veterinary Medicine (HFV–100), Food and Drug Administration, 7500 Standish Pl., Rockville, MD 20855, 301–827–6967, e-mail: *david.newkirk@fda.gov*.

SUPPLEMENTARY INFORMATION: Alstoe, Ltd., Animal Health, Granary Chambers, 37–39 Burton St., Melton Mowbray, Leicestershire LE13 1AF, England has informed FDA of a change of address to Pera Innovation Park, Nottingham Rd., Melton Mowbray, Leicestershire, England LE13 0PB. Accordingly, the agency is amending the regulations in 21 CFR 510.600(c) to reflect the change.

This rule does not meet the definition of ‘‘rule’’ in 5 U.S.C. 804(3)(A) because it is a rule of ‘‘particular applicability.’’ Therefore, it is not subject to the congressional review requirements in 5 U.S.C. 801–808.

List of Subjects in 21 CFR Part 510

Administrative practice and procedure, Animal drugs, Labeling, Reporting and recordkeeping requirements.

■ Therefore, under the Federal Food, Drug, and Cosmetic Act and under authority delegated to the Commissioner of Food and Drugs and redelegated to the Center for Veterinary Medicine, 21 CFR part 510 is amended as follows:

PART 510—NEW ANIMAL DRUGS

■ 1. The authority citation for 21 CFR part 510 continues to read as follows:

Authority: 21 U.S.C. 321, 331, 351, 352, 353, 360b, 371, 379e.

■ 2. Section 510.600 is amended in the table in paragraph (c)(1) by revising the entry for ‘‘Alstoe, Ltd.’’; and in the table in paragraph (c)(2) by revising the entry for ‘‘062408’’ to read as follows.

§ 510.600 Names, addresses, and drug labeler codes of sponsors of approved applications.

* * * * *

(c) * * *

(1) * * *

Firm name and address	Drug labeler code
* * * * *	
Alstoe, Ltd., Animal Health, Pera Innovation Park, Nottingham Rd., Melton Mowbray, Leicestershire, England LE13 0PB	062408
* * * * *	

(2) * * *

Drug labeler code	Firm name and address
* * * * *	
062408	Alstoe, Ltd., Animal Health, Pera Innovation Park, Nottingham Rd., Melton Mowbray, Leicestershire, England LE13 0PB
* * * * *	

Dated: January 3, 2005.

Steven D. Vaughn,

Director, Office of New Animal Drug Evaluation, Center for Veterinary Medicine.

[FR Doc. 05–697 Filed 1–12–05; 8:45 am]

BILLING CODE 4160–01–S

DEPARTMENT OF HEALTH AND HUMAN SERVICES

Food and Drug Administration

21 CFR Part 520

Oral Dosage Form New Animal Drugs; Levamisole Powder for Oral Solution

AGENCY: Food and Drug Administration, HHS.

ACTION: Final rule.

SUMMARY: The Food and Drug Administration (FDA) is amending the animal drug regulations to reflect approval of an abbreviated new animal drug application (ANADA) filed by Phoenix Scientific, Inc. The ANADA provides for use of levamisole hydrochloride soluble powder to make a drench solution for oral administration to cattle and sheep which is effective against various internal parasites.

DATES: This rule is effective January 13, 2005.

FOR FURTHER INFORMATION CONTACT: Lonnie W. Luther, Center for Veterinary Medicine (HFV 104), Food and Drug Administration, 7519 Standish Pl., Rockville, MD 20855, 301–827–8549, e-mail: *lonnie.luther@fda.gov*.

SUPPLEMENTARY INFORMATION: Phoenix Scientific, Inc., 3915 South 48th St. Terrace, St. Joseph, MO 64503, filed ANADA 200–386 for Levamisole Hydrochloride Soluble Drench Powder used to make a drench solution for oral administration to cattle and sheep which is effective against various internal parasites. Phoenix Scientific's Levamisole Hydrochloride Soluble Drench Powder is approved as a generic copy of Schering-Plough Animal Health Corp.'s, LEVASOL (levamisole hydrochloride) Soluble Drench Powder, approved under NADA 112–051. The ANADA is approved as of December 17, 2004, and the regulations are amended in 21 CFR 520.1242a to reflect the approval. The basis of approval is discussed in the freedom of information summary.

In accordance with the freedom of information provisions of 21 CFR part 20 and 21 CFR 514.11(e)(2)(ii), a summary of safety and effectiveness data and information submitted to support approval of this application may be seen in the Division of Dockets Management (HFA–305), Food and Drug Administration, 5630 Fishers Lane, rm. 1061, Rockville, MD 20852, between 9 a.m. and 4 p.m., Monday through Friday.

FDA has determined under 21 CFR 25.33(a)(1) that this action is of a type that does not individually or cumulatively have a significant effect on the human environment. Therefore, neither an environmental assessment nor an environmental impact statement is required.

This rule does not meet the definition of ''rule'' in 5 U.S.C. 804(3)(A) because it is a rule of ''particular applicability.'' Therefore, it is not subject to the congressional review requirements in 5 U.S.C. 801–808.

List of Subject in 21 CFR Part 520

Animal drugs.

■ Therefore, under the Federal Food, Drug, and Cosmetic Act and under authority delegated to the Commissioner of Food and Drugs and redelegated to the Center for Veterinary Medicine, 21 CFR part 520 is amended as follows:

PART 520—ORAL DOSAGE FORM NEW ANIMAL DRUGS

■ 1. The authority citation for 21 CFR part 520 continues to read as follows:

Authority: 21 U.S.C. 360b.

■ 2. Section 520.1242a is amended by revising paragraphs (a) and (b)(4) to read as follows:

§ 520.1242a Levamisole powder for oral solution.

(a) *Specifications*. Each package of powder contains 9.075, 11.7, 18.15, 46.8, 362.7, or 544.5 grams (g) levamisole hydrochloride.

(b) * * *

(4) No. 059130 for use of 46.8-, 362.7-, and 544.5-g packages as in paragraphs (e)(1)(i), (e)(1)(ii)(B), (e)(1)(iii), (e)(2)(i), (e)(2)(ii)(B), and (e)(2)(iii) of this section; and for use of an 18.15-g package as in paragraph (e)(3) of this section.

* * * * *

Dated: January 6, 2005.

Stephen F. Sundlof,

Director, Center for Veterinary Medicine.

[FR Doc. 05–675 Filed 1–12–05; 8:45 am]

BILLING CODE 4160–01–S

DEPARTMENT OF HOMELAND SECURITY

Coast Guard

33 CFR Part 110

[CGD01–04–004]

1625–AA01

Anchorage Grounds; Buzzards Bay, MA

AGENCY: Coast Guard, DHS.

ACTION: Final rule.

SUMMARY: The Coast Guard hereby establishes anchorage regulations for Buzzards Bay, Nantucket Sound, and adjacent waters of Massachusetts by relocating anchorage ground ''L'' in Buzzards Bay to an area near Naushon Island, MA. This action is intended to increase the safety of life and property on Buzzards Bay, improve the safety of anchored vessels in anchorage ''L'', and provide for the overall safe and efficient flow of vessel traffic and commerce along the newly established Recommended Traffic Route for Deep Draft Vessels. This regulation will maintain the original shape and dimension of anchorage ''L'' but move the anchorage to a new location within Buzzards Bay.

DATES: This rule is effective February 14, 2005.

ADDRESSES: Comments and material received from the public, as well as documents indicated in this preamble as being available in the docket, are part of docket [CGD01–02–027] and are available for inspection or copying at First Coast Guard District, 408 Atlantic Ave., Boston, Massachusetts 02110 between 8 a.m. and 3 p.m., Monday through Friday, except Federal holidays.

FOR FURTHER INFORMATION CONTACT: Mr. John J. Mauro, Commander (oan), First Coast Guard District, 408 Atlantic Ave., Boston, MA 02110, Telephone (617) 223–8355, e-mail: *jmauro@d1.uscg.mil.*

SUPPLEMENTARY INFORMATION:

Regulatory Information

On April 16, 2004, we published a notice of proposed rulemaking (NPRM) entitled Anchorage Grounds; Buzzards Bay, MA in the **Federal Register** (69 FR 20568). We received one comment on the proposed rule. No public hearing was requested and none was held.

Background and Purpose

In light of significant oil spills in Rhode Island Sound in 1996 and Buzzards Bay in 2003, the Coast Guard investigated methods of improving navigational safety in Buzzards Bay. The Coast Guard conducted a Port and Waterways Safety Assessment (PAWSA) to collect input on potential navigational safety improvements in Buzzards Bay from the local maritime community. After studying the issue and collecting mariner input, the Coast Guard concluded that a Recommended Traffic Route for Deep Draft vessels in Buzzards Bay should be implemented to improve navigation safety in this area.

Presently, there are two designated anchorage grounds in Buzzards Bay; anchorage ''L'' and anchorage ''M'', whose locations are described in 33 CFR 110.140(b)(3) and 33 CFR 110.140(b)(4), respectively. The present location of anchorage ''L'' puts it directly in the path of the Recommended Route for Deep Draft vessels entering or leaving the Cape Cod Canal via Cleveland Ledge Channel depicted on current versions of NOAA nautical charts in the area. Thus, this rule is needed to move anchorage ''L'' to a new and safer location. Although the location of anchorage ''L'' will change, its size and shape will remain the same.

The Coast Guard has defined the anchorage areas contained herein with the advice and consent of the Army Corps of Engineers, New England District, located at 696 Virginia Rd., Concord, MA 01742.

This regulation will not exclude fishing activity or the transit of vessels in the anchorage grounds. The Coast Guard expects no increase in the amount of vessels utilizing anchorage ''L'' as a result of this change in its location.

Discussion of Comments and Changes

We received one letter commenting on the proposed rule. The Coalition for Buzzards Bay wrote to support the proposed new location. The language in the final rule is changed from the proposed language only to make the bounds of the anchorage more clear. The location, size, and shape of the anchorage are unaltered by the change in language.

Note: That this language varies slightly from that for anchorage ''M'', at 33 CFR 110.140(b)(4). We intend to issue a separate technical correction in the future to align the description of anchorage ''M'' with anchorage ''L''.

Regulatory Evaluation

This rule is not a ''significant regulatory action'' under section 3(f) of Executive Order 12866, Regulatory Planning and Review, and does not require an assessment of potential costs and benefits under section 6(a)(3) of that Order. The Office of Management and Budget has not reviewed it under that Order. It is not ''significant'' under the regulatory policies and procedures of the Department of Homeland Security (DHS).

This conclusion is based upon the fact that there are no fees, permits, or specialized requirements for the maritime industry to utilize this anchorage area. The regulation is solely for the purpose of advancing the safety of maritime commerce.

Small Entities

Under the Regulatory Flexibility Act (5 U.S.C. 601–612), we have considered whether this rule would have a significant economic impact on a substantial number of small entities. The term ''small entities'' comprises small businesses, not-for-profit organizations that are independently owned and operated and are not dominant in their fields, and governmental jurisdictions with populations of less than 50,000.

The Coast Guard certifies under 5 U.S.C. 605(b) that this rule will not have a significant economic impact on a substantial number of small entities.

This rule will have minimal economic impact on vessels operated by small entities. This conclusion is based upon the fact that there are no restrictions for entry or use of the anchorage targeting small entities. This regulation only relocates one existing anchorage area.

Assistance for Small Entities

Under section 213(a) of the Small Business Regulatory Enforcement Fairness Act of 1996 (Pub. L. 104–121), we offered to assist small entities in understanding the rule so that they could better evaluate its effects on them and participate in the rulemaking process. If the rule will affect your small business, organization, or governmental jurisdiction and you have questions concerning its provisions or options for compliance, please contact John J. Mauro at the address listed in **ADDRESSES** above.

Collection of Information

This rule calls for no new collection of information under the Paperwork Reduction Act of 1995 (44 U.S.C. 3501–3520).

Federalism

A rule has implications for federalism under Executive Order 13132, Federalism, if it has a substantial direct effect on State or local governments and would either preempt State law or impose a substantial direct cost of compliance on them. We have analyzed this rule under that Order and have determined that it does not have implications for federalism.

Unfunded Mandates Reform Act

The Unfunded Mandates Reform Act of 1995 (2 U.S.C. 1531–1538) requires Federal agencies to assess the effects of their discretionary regulatory actions. In particular, the Act addresses actions that may result in the expenditure by a State, local, or tribal government, in the aggregate, or by the private sector of $100,000,000 or more in any one year. Though this rule will not result in such expenditure, we do discuss the effects of this rule elsewhere in this preamble. This rule will not impose an unfunded mandate.

Taking of Private Property

This rule will not effect a taking of private property or otherwise have taking implications under Executive Order 12630, Governmental Actions and Interference with Constitutionally Protected Property Rights.

Civil Justice Reform

This rule meets applicable standards in sections 3(a) and 3(b)(2) of Executive Order 12988, Civil Justice Reform, to minimize litigation, eliminate ambiguity, and reduce burden.

Protection of Children

The Coast Guard has analyzed this rule under Executive Order 13045, Protection of Children from Environmental Health Risks and Safety Risks. This rule is not an economically significant rule and does not create an environmental risk to health or risk to safety that might disproportionately affect children.

Indian Tribal Governments

This rule does not have tribal implications under Executive Order 13175, Consultation and Coordination with Indian Tribal Governments, because it does not have a substantial direct effect on one or more Indian tribes, on the relationship between the Federal Government and Indian tribes, or on the distribution of power and responsibilities between the Federal Government and Indian tribes.

Energy Effects

We have analyzed this rule under Executive Order 13211, Actions Concerning Regulations That Significantly Affect Energy Supply, Distribution, or Use. We have determined that it is not a ''significant energy action'' under that Order because it is not a ''significant regulatory action'' under Executive Order 12866 and is not likely to have a significant adverse effect on the supply, distribution, or use of energy. It has not been designated by the Administrator of the Office of Information and Regulatory Affairs as a significant energy action. Therefore, it does not require a Statement of Energy Effects under Executive Order 13211.

Technical Standards

The National Technology Transfer and Advancement Act (NTTAA) (15 U.S.C. 272 note) directs agencies to use voluntary consensus standards in their regulatory activities unless the agency provides Congress, through the Office of Management and Budget, with an explanation of why using these standards would be inconsistent with applicable law or otherwise impractical. Voluntary consensus standards are technical standards (*e.g.*, specifications of materials, performance, design, or operation; test methods; sampling procedures; and related management systems practices) that are developed or adopted by voluntary consensus standards bodies.

This rule does not use technical standards. Therefore, we did not consider the use of voluntary consensus standards.

Environment

The Coast Guard has considered the environmental impact of this rule and concluded that, under figure 2–1, paragraph (34)(f) of Commandant Instruction M16475.1D, this rule is categorically excluded from further environmental documentation. A ''Categorical Exclusion Determination'' is available in the docket for inspection

or copying where indicated under **ADDRESSES.**

This rule relocates one existing anchorage area to the East of the Recommended Traffic Route for Deep Draft Vessels. This designated anchorage will enhance safety in the waters of Buzzards Bay, MA by relieving vessel congestion within the bay. Thus, relocating this designated anchorage would provide a safer approach to the Cape Cod Canal by deep draft vessels.

List of Subjects in 33 CFR Part 110

Anchorage grounds.

■ For the reasons set forth in the preamble, the Coast Guard amends 33 CFR part 110 as follows:

PART 110—ANCHORAGE REGULATIONS

■ 1. The authority citation for part 110 continues to read as follows:

Authority: 33 U.S.C. 471, 1221 through 1236, 2030, 2035, 2071; 33 CFR 1.05–1(g) and Department of Homeland Security Delegation No. 0170.1.

■ 2. Section 110.140(b)(3) is revised to read as follows:

§ 110.140 Buzzards Bay, Nantucket Sound, and adjacent waters, Mass.

* * * * *

(b) * * *

(3) *Anchorage L.* The area of water bounded by lines connecting the following points: 41°30′11″ N, 070°48′10″ W to 41°30′46″ N, 070°48′45″ W, to 41°32′24″ N, 070°45′50″ W to 41°31′48″ N, 070°45′15″ W and thence to start.

* * * * *

Dated: December 22, 2004.

David P. Pekoske,

Rear Admiral, U.S. Coast Guard, Commander, First Coast Guard District.

[FR Doc. 05–655 Filed 1–12–05; 8:45 am]

BILLING CODE 4910–15–P

DEPARTMENT OF HOMELAND SECURITY

Coast Guard

33 CFR Part 117

[CGD08–05–002]

Drawbridge Operation Regulations; Vermilion River, Flanders, LA

AGENCY: Coast Guard, DHS.

ACTION: Notice of temporary deviation from regulations.

SUMMARY: The Commander, Eighth Coast Guard District, has issued a temporary deviation from the regulation governing the operation of the SR 3073 Swing Bridge across the Vermilion River, mile 44.9, at Flanders, Lafayette Parish, Louisiana. This deviation allows the bridge to remain closed to navigation from 6 a.m. on Sunday, February 13, 2005 until 6 a.m. on Wednesday, March 16, 2005. The deviation is necessary to repair and replace the decking on the bridge.

DATES: This deviation is effective from 6 a.m. on Sunday, February 13, 2005 until 6 a.m. on Wednesday, March 16, 2005.

ADDRESSES: Materials referred to in this document are available for inspection or copying at the office of the Eighth Coast Guard District, Bridge Administration Branch, Hale Boggs Federal Building, Room 1313, 500 Poydras Street, New Orleans, Louisiana 70130–3310 between 7 a.m. and 3 p.m., Monday through Friday, except Federal holidays. The telephone number is (504) 589–2965. The Bridge Administration Branch of the Eighth Coast Guard District maintains the public docket for this temporary deviation.

FOR FURTHER INFORMATION CONTACT: David Frank, Bridge Administration Branch, telephone (504) 589–2965.

SUPPLEMENTARY INFORMATION: The Louisiana Department of Transportation and Development (LDOTD) has requested a temporary deviation in order to remove and replace the decking on the SR 3073 Swing Bridge across the Vermilion River, mile 44.9, at Flanders, Lafayette Parish, Louisiana. The repairs are necessary to maintain the bridge in proper working condition. This temporary deviation will allow the bridge to remain in the closed-to-navigation position from 6 a.m. on Sunday, February 13, 2005 until 6 a.m. on Wednesday, March 16, 2005.

The bridge has a vertical clearance of 13.28 feet above high water, elevation 8.2 feet MSL in the closed-to-navigation position and unlimited clearance in the open-to-navigation position. The bridge has only opened 15 times in the previous five years. There were no requests to open the bridge from any vessels in 2004. During the repairs, the bridge will not be able to be opened for navigation because the swing span will be out of balance. No alternate routes are available. Based upon the information provided by the bridge owner regarding the number of bridge openings, it has been determined that this closure will not have a significant effect on vessels which use this reach of the waterway.

In accordance with 33 CFR 117.35(c), this work will be performed with all due speed in order to return the bridge to normal operation as soon as possible. This deviation from the operating regulations is authorized under 33 CFR 117.35.

Dated: January 6, 2005.

Marcus Redford,

Bridge Administrator.

[FR Doc. 05–735 Filed 1–12–05; 8:45 am]

BILLING CODE 4910–15–P

DEPARTMENT OF HOMELAND SECURITY

Coast Guard

33 CFR Part 165

[COTP Western Alaska–04–003]

RIN 1625–AA00

Safety Zone; Bering Sea, Aleutian Islands, Unalaska Island, AK

AGENCY: Coast Guard, DHS.

ACTION: Temporary final rule.

SUMMARY: The Coast Guard is establishing a temporary safety zone in the Bering Sea, west of and including Makushkin Bay, Unalaska Island, Alaska. The zone is needed to facilitate oil spill recovery operations related to the grounding of the merchant vessel (M/V) SELENDANG AYU, and to mitigate damage to the environment during oil spill recovery operations. Entry of vessels or persons into this zone is prohibited unless specifically authorized by the Commander, Seventeenth Coast Guard District, the Coast Guard Captain of the Port, Western Alaska, or their on-scene representative.

DATES: This rule is effective from December 11, 2004 through June 11, 2005.

ADDRESSES: Documents indicated in this preamble as being available in the docket are available for inspection and copying at Coast Guard Marine Safety Office Anchorage, 510 ''L'' Street, Suite 100, Anchorage, AK 99501. Normal Office hours are 7:30 a.m. to 4 p.m., Monday through Friday, except Federal holidays.

FOR FURTHER INFORMATION CONTACT: LT Meredith Gillman, Marine Safety Office Anchorage, at (907) 271–6700.

SUPPLEMENTARY INFORMATION:

Regulatory Information

We did not publish a notice of proposed rulemaking (NPRM) for this regulation. Under 5 U.S.C. 553(b)(B), the Coast Guard finds that good cause exists for not publishing an NPRM. Any delay

encountered in this regulation's effective date would be contrary to public interest because immediate action is needed to prevent unauthorized vessel traffic from hindering oil spill recovery operations.

Under 5 U.S.C. 553(d)(3), the Coast Guard finds that good cause exists for making this rule effective less than 30 days after publication in the **Federal Register**. The Safety Zone is being implemented in response to the unplanned grounding of the M/V SELENDANG AYU. Any delay encountered in this regulation's effective date would be unnecessary and contrary to public interest, since immediate action is needed to mitigate damage to the environment during oil spill recovery operations. The Coast Guard will terminate the zone when oil recovery operations are complete and the area adjacent to the grounded vessel is considered safe to vessel traffic.

Background and Purpose

The M/V SELENDANG AYU ran aground at a position of 53.634° N, 167.125° W on December 9, 2004. The vessel then broke in half and began discharging its fuel into the water. The safety zone is necessary to prevent unauthorized vessels from transiting through the oiled waters or otherwise impeding oil recovery operations.

Discussion of Rule

The Unified Command, which is responding to the grounding of the M/V Selendang Ayu, identified the likely oil trajectory based on the geography of the region, as well as possible wind and weather scenarios. The safety zone was established in the area that is likely to become oiled, and where subsequent oil recovery operations will be taking place. This area is defined by a point at the western tip of Cape Kovrizhka, Unalaska Island, located at 53°51.0′ N, 167°9.5′ W, then west 10 nautical miles to a point located at 53°51.0′ N, 167°26′ W, then south to the northern tip of Wedge Point, Unalaska Island, located at 53°27′ N, 167°24′ W. All coordinates reference Datum: NAD 1983.

Regulatory Evaluation

This rule is not a ''significant regulatory action'' under section 3(f) of Executive Order 12866, Regulatory Planning and Review, and does not require an assessment of potential cost and benefits under section 6(a)(3) of that Order. The Office of Management and Budget has not reviewed it under that Order. It is not significant under the regulatory policies and procedures of the Department of Homeland Security (DHS). The Coast Guard expects the economic impact of this rule to be so minimal that a full Regulatory Evaluation under paragraph 10(e) of the regulatory policies and procedures of DHS is unnecessary.

Small Entities

Under the Regulatory Flexibility Act (5 U.S.C. 601–612), we have considered whether this rule will have a significant economic impact on a substantial number of small entities. The term ''small entities'' comprises small businesses, not-for-profit organizations that are independently owned and operated and are not dominant in their fields, and governmental jurisdictions with populations of less than 50,000.

The Coast Guard certifies under 5 U.S.C. 605(b) that this rule will not have a significant economic impact on a substantial number of small entities.

This rule will affect the following entities, some of which may be small entities: The owners or operators of vessels intending to transit or anchor in the area defined by a point at the western tip of Cape Kovrizhka, Unalaska Island, located at 53°51.0′ N, 167°9.5′ W, then west 10 nautical miles to a point located at 53°51.0′ N, 167°26′ W, then south to the northern tip of Wedge Point, Unalaska Island, located at 53°27′ N, 167°24′ W.

This safety zone will not have a significant economic impact on a substantial number of small entities for the following reasons. Vessel traffic transiting from the north to south side of Unalaska Island can pass safely around the safety zone. We will terminate the safety zone once oil recovery operations are complete and the area adjacent to the grounded vessel is considered safe for vessel traffic.

Collection of Information

This rule calls for no new collection of information under the Paperwork Reduction Act of 1995 (44 U.S.C. 3501–3520).

Federalism

A rule has implications for federalism under Executive Order 13132, Federalism, if it has a substantial direct effect on State or local governments and would either preempt State law or impose a substantial direct cost of compliance on them. We have analyzed this rule under that Order and have determined that it does not have implications for federalism.

Unfunded Mandates Reform Act

The Unfunded Mandates Reform Act of 1995 (2 U.S.C. 1531–1538) requires Federal agencies to assess the effects of their discretionary regulatory actions. In particular, the Act addresses actions that may result in the expenditure by a State, local, or tribal government, in the aggregate, or by the private sector of $100,000,000 or more in any one year. Though this rule will not result in such an expenditure, we do discuss the effects of this rule elsewhere in this preamble.

Taking of Private Property

This rule will not effect a taking of private property or otherwise have taking implications under Executive Order 12630, Governmental Actions and Interference with Constitutionally Protected Property Rights.

Civil Justice Reform

This rule meets applicable standards in sections 3(a) and 3(b)(2) of Executive Order 12988, Civil Justice Reform, to minimize litigation, eliminate ambiguity, and reduce burden.

Protection of Children

We have analyzed this rule under Executive Order 13045, Protection of Children from Environmental Health Risks and Safety Risks. This rule is not an economically significant rule and does not create an environmental risk to health or risk to safety that may disproportionately affect children.

Indian Tribal Governments

This rule does not have tribal implications under Executive Order 13175, Consultation and Coordination with Indian Tribal Governments, because it does not have a substantial direct effect on one or more Indian tribes, on the relationship between the Federal Government and Indian tribes, or on the distribution of power and responsibilities between the Federal Government and Indian tribes.

Energy Effects

We have analyzed this rule under Executive Order 13211, Actions Concerning Regulations That Significantly Affect Energy Supply, Distribution, or Use. We have determined that it is not a ''significant energy action'' under that order because it is not a ''significant regulatory action'' under Executive Order 12866 and is not likely to have a significant adverse effect on the supply, distribution, or use of energy. The Administrator of the Office of Information and Regulatory Affairs has not designated it as a significant energy action. Therefore, it does not require a Statement of Energy Effects under Executive Order 13211.

Technical Standards

The National Technology Transfer and Advancement Act (NTTAA) (15 U.S.C. 272 note) directs agencies to use voluntary consensus standards in their regulatory activities unless the agency provides Congress, through the Office of Management and Budget, with an explanation of why using these standards would be inconsistent with applicable law or otherwise impractical. Voluntary consensus standards are technical standards (*e.g.*, specifications of materials, performance, design, or operation; test methods; sampling procedures; and related management systems practices) that are developed or adopted by voluntary consensus standards bodies.

This rule does not use technical standards. Therefore, we did not consider the use of voluntary consensus standards.

Environment

We have analyzed this rule under Commandant Instruction M16475.lD, which guides the Coast Guard in complying with the National Environmental Policy Act of 1969 (NEPA) (42 U.S.C. 4321–4370f). A final ''Environmental Analysis Check List'' and a final ''Categorical Exclusion Determination'' will be available in the docket where indicated under **ADDRESSES**.

List of Subjects in 33 CFR Part 165

Harbors, Marine safety, Navigation (water), Reporting and recordkeeping requirements, Security measures, Waterways.

■ For the reasons set out in the preamble, the Coast Guard amends 33 CFR part 165 as follows:

PART 165—[AMENDED]

■ 1. The authority citation for part 165 continues to read as follows:

Authority: 33 U.S.C. 1226, 1231; 46 U.S.C. chapter 701; 50 U.S.C. 191, 195; 33 CFR 1.05–1(g), 6.04–1, 6.04–6, and 160.5; Pub. L. 107–295, 116 Stat. 2064; Department of Homeland Security Delegation No. 0170.1.

■ 2. From December 11, 2004 to June 11, 2005, add temporary § 165.T17–010 to read as follows:

§ 165.T17–010 Safety Zone; Bering Sea, Aleutian Islands, Unalaska Island, AK.

(a) *Description.* The safety zone is defined by a point at the western tip of Cape Kovrizhka, Unalaska Island, located at 53°51.0′ N, 167°9.5′ W, then west 10 nautical miles to a point located at 53°51.0′ N, 167°26′ W, then south to the northern tip of Wedge Point, Unalaska Island, located at 53°27′ N, 167°24′ W. All coordinates reference Datum: NAD 1983.

(b) *Enforcement period.* The safety zones in this section will be enforced from December 11, 2004 through June 11, 2005.

(c) *Regulations.* (1) The Captain of the Port and the Duty Officer at Marine Safety Office, Anchorage, Alaska can be contacted at telephone number (907) 271–6700.

(2) The Captain of the Port may authorize and designate any Coast Guard commissioned, warrant, or petty officer to act on his behalf in enforcing the safety zone.

(3) The general regulations governing safety zones contained in § 165.23 apply. No person or vessel may enter or remain in this safety zone, with the exception of attending vessels, without first obtaining permission from the Captain of the Port or his on-scene representative

Dated: December 21, 2004.

R.J. Morris,

Captain, U.S. Coast Guard, Captain of the Port, Western Alaska.

[FR Doc. 05–657 Filed 1–12–05; 8:45 am]

BILLING CODE 4910–15–P

DEPARTMENT OF HOMELAND SECURITY

Coast Guard

33 CFR Part 165

[CGD13–04–045]

RIN 1625–AA87

Security Zone; Protection of Military Cargo, Captain of the Port Zone Puget Sound, WA

AGENCY: Coast Guard, DHS.

ACTION: Final rule; notice of enforcement and suspension of enforcement.

SUMMARY: The Captain of the Port, Puget Sound will begin enforcing the Budd Inlet security zone established by 33 CFR 165.1321 on Tuesday, January 11, 2005, at 8 a.m. Pacific Standard Time. The security zone provides for the security of Department of Defense assets and military cargo in the navigable waters of Puget Sound and adjacent waters. The security zone will be enforced until Saturday, January 15, 2005, at 11:59 p.m. Pacific Standard Time.

DATES: The Budd Inlet security zone set forth in 33 CFR 165.1321 will be enforced from Tuesday, January 11, 2005, at 8 a.m. Pacific Standard Time to Saturday, January 15, 2005, at 11:59 p.m. Pacific Standard Time.

FOR FURTHER INFORMATION CONTACT: Captain of the Port, Puget Sound, 1519 Alaskan Way South, Seattle, WA 98134 at (206) 217–6200 or (800) 688–6664 to obtain information concerning enforcement of this rule.

SUPPLEMENTARY INFORMATION: On August 27, 2004, the Coast Guard published a final rule (69 FR 52603) establishing regulations, in 33 CFR 165.1321, for the security of Department of Defense assets and military cargo in the navigable waters of Puget Sound and adjacent waters. On December 10, 2004, the Coast Guard published a final rule (69 FR 71711), which amended 33 CFR 165.1321 by adding Budd Inlet, Olympia, WA as a permanent security zone. These security zones provide for the regulation of vessel traffic in the vicinity of military cargo loading facilities in the navigable waters of the United States. These security zones also exclude persons and vessels from the immediate vicinity of these facilities during military cargo loading and unloading operations. In addition, the regulation establishes requirements for all vessels to obtain permission of the COTP or the COTP's designated representative, including the Vessel Traffic Service Puget Sound (VTS) to enter, move within, or exit these security zones when they are enforced. Entry into these zones is prohibited unless otherwise exempted or excluded under 33 CFR 165.1321 or unless authorized by the Captain of the Port or his designee. The Captain of the Port, Puget Sound will begin enforcing the Budd Inlet security zone established by 33 CFR 165.1321 on Tuesday, January 11, 2005, at 8 a.m. Pacific Standard Time. The security zone will be enforced until Saturday, January 15, 2005, at 11:59 p.m. Pacific Standard Time. All persons and vessels are authorized to enter, move within, and exit the security zone on or after Saturday, January 15, 2005, at 11:59 p.m. Pacific Standard Time unless a new notice of enforcement is issued before then.

Dated: January 4, 2005.

Danny Ellis,

Captain, U.S. Coast Guard, Captain of the Port, Puget Sound.

[FR Doc. 05–734 Filed 1–12–05; 8:45 am]

BILLING CODE 4910–15–P

ENVIRONMENTAL PROTECTION AGENCY

40 CFR Part 52

[Region 2 Docket No. R02–OAR–2004–NY–0001; FRL–7852–5]

Approval and Promulgation of Implementation Plans; New York State Implementation Plan Revision

AGENCY: Environmental Protection Agency (EPA).

ACTION: Final rule.

SUMMARY: The Environmental Protection Agency (EPA) is approving a request from New York to revise its State Implementation Plan (SIP) for ozone to incorporate revisions to subpart 227–2 ''Reasonably Available Control Technology (RACT) for Oxides of Nitrogen (NO_X)'' of Part 227 ''Stationary Combustion Installations'' of title 6 of the Official Compilation of Codes, Rules and Regulations of the State of New York (6NYCRR). The revision relates to the control of oxides of nitrogen emissions from stationary industrial sources. This SIP revision consists of a control measure needed to meet the shortfall in emissions reduction identified by EPA in New York's one-hour ozone attainment demonstration SIP.

The intended effect of this rule is to approve a control strategy which will result in emission reductions that will help achieve attainment of the national ambient air quality standard for ozone required by the Clean Air Act.

EFFECTIVE DATE: This rule will be effective February 14, 2005.

ADDRESSES: Copies of the state submittal(s) are available at the following addresses for inspection during normal business hours: Environmental Protection Agency, Region 2 Office, Air Programs Branch, 290 Broadway, 25th Floor, New York, New York 10007–1866. New York State Department of Environmental Conservation, Division of Air Resources, 625 Broadway, 2nd Floor, Albany, New York 12233.

FOR FURTHER INFORMATION CONTACT: Anthony (Ted) Gardella *(Gardella.Anthony@epa.gov)* for specific questions on New York's NO_X RACT SIP revision or Kirk J. Wieber *(Wieber.Kirk@epa.gov)* for specific questions on New York's ozone attainment demonstration; Air Programs Branch, Environmental Protection Agency, 290 Broadway, 25th Floor, New York, New York 10007–1866, (212) 637–3892 or (212) 637–3381, respectively.

SUPPLEMENTARY INFORMATION:

I. What Action Is EPA Taking Today?
II. What Comments Were Received and How Has EPA Responded to Them?
III. What Role Does This Rule Play in the Ozone SIP?
IV. What Are EPA's Conclusions?
V. Administrative Correction to Section 52.1679 EPA-Approved New York State Regulations
VI. Statutory and Executive Order Reviews

I. What Action Is EPA Taking Today?

EPA is approving a revision to New York's ground level ozone State Implementation Plan (SIP) which New York submitted on February 18, 2004. The SIP revision includes amendments to the following two regulations: Subpart 227–2 entitled ''Reasonably Available Control Technology (RACT) for Oxides of Nitrogen (NO_X)'' of part 227 entitled, ''Stationary Combustion Installation;'' and subpart 201–3 entitled, ''Exemptions and Trivial Activities,'' of part 201 entitled, ''Permits and Registration,'' all of which are part of title 6 of the New York Codes of Rules and Regulations. These amended rules were adopted on January 9, 2004. New York submitted the regulations in order to strengthen its one-hour ozone SIP. New York amended subpart 227–2 for the purpose of achieving additional reductions of NO_X emissions in response to emission reduction shortfalls identified by EPA (64 FR 70364; December 16, 1999) for attainment of New York's one-hour ozone standard. New York amended subpart 201–3 to be consistent with amendments to subpart 227–2. EPA has determined that New York's submittal is fully approvable as a SIP strengthening measure for New York's one-hour ground level ozone SIP. The reader is referred to the proposed rulemaking (69 FR 59839; October 6, 2004) for additional details.

II. What Comments Were Received and How Has EPA Responded to Them?

The public comment period on EPA's proposed approval of New York's February 18, 2004 SIP submittal ended on November 5, 2004. EPA received no comments on the proposed approval action.

III. What Role Does This Rule Play in the Ozone SIP?

When EPA evaluated New York's one-hour ozone attainment demonstrations, EPA determined that additional emission reductions were needed for the State's severe nonattainment area in order for the State to attain the one-hour ozone standard with sufficient surety (64 FR 70364; December 16, 1999). EPA provided that the states in the Ozone Transport Region could achieve these emission reductions through regional control programs. New York decided to participate with the other states in the Northeast in an Ozone Transport Commission (OTC) regulatory development effort which lead to six model control measures. The New York rule, which was adopted by the State on January 9, 2004, incorporates a portion of the OTC model rule for additional NO_X control measures. The emission reductions from this control measure will provide additional emission reductions towards attaining the one-hour ozone standard and will be important in attaining the 8-hour ozone standard.

IV. What Are EPA's Conclusions?

EPA has evaluated New York's submittal for consistency with the Clean Air Act, EPA regulations, and EPA policy. The proposed new control measures will strengthen the SIP by providing additional NO_X emission reductions. Accordingly, EPA is approving the revision to subpart 227–2, as adopted on January 9, 2004, into New York's ozone SIP. Because of previous changes to subpart 201–3 independent of today's rulemaking, EPA will take action on the revisions to subpart 201–3, as adopted by New York on January 9, 2004, at a later date.

In revising subpart 227–2, New York deleted the final compliance date applicable to sources because the date had passed, and sources are now expected to be in compliance. EPA believes that the deletion makes it less clear to sources obligated to comply with the May 31, 1995 compliance date in the Clean Air Act and in the previously approved SIP that they are obliged to have complied by that date. Nevertheless, deletion of the date does not eliminate the effective date established by the prior SIP approved rule or the Clean Air Act and thus does not impact on the State and EPA's authority to enforce. In the event EPA needs to take enforcement action, it will base penalties for noncompliance on the final compliance date in effect at the time of the violation.

V. Administrative Correction to Section 52.1679 EPA-Approved New York State Regulations

New York submitted part 215 ''Open Fires'' (state effective date June 16, 1972) as part of the SIP and EPA incorporated it into the SIP (see 40 CFR 52.1670(c)(6)). In a subsequent SIP revision dated August 10, 1979 the State submitted a request to incorporate additional regulations and include current versions of the regulations

previously included in the SIP. One of these regulations was part 215.

In EPA's proposed approval of the August 10, 1979 SIP revision (46 FR 19829; April 1, 1981) EPA stated that part 215 had not been changed from the version that was incorporated into the SIP and that no further action was necessary. EPA finalized that rulemaking on November 12, 1981 (46 FR 55690) and created a table of approved regulations in section 52.1679 ''EPA-approved New York State regulation.'' However, part 215 was inadvertently not included in the section 52.1679 table.

As part of today's rulemaking, EPA is correcting this omission and is adding part 215 to the table of approved New York regulations.

VI. Statutory and Executive Order Reviews

Under Executive Order 12866 (58 FR 51735, October 4, 1993), this action is not a ''significant regulatory action'' and therefore is not subject to review by the Office of Management and Budget. For this reason, this action is also not subject to Executive Order 13211, ''Actions Concerning Regulations That Significantly Affect Energy Supply, Distribution, or Use'' (66 FR 28355, May 22, 2001). This action merely approves state law as meeting Federal requirements and imposes no additional requirements beyond those imposed by state law. Accordingly, the Administrator certifies that this rule will not have a significant economic impact on a substantial number of small entities under the Regulatory Flexibility Act (5 U.S.C. 601 *et seq.*). Because this rule approves pre-existing requirements under state law and does not impose any additional enforceable duty beyond that required by state law, it does not contain any unfunded mandate or significantly or uniquely affect small governments, as described in the Unfunded Mandates Reform Act of 1995 (Pub. L. 104–4).

This rule also does not have tribal implications because it will not have a substantial direct effect on one or more Indian tribes, on the relationship between the Federal Government and Indian tribes, or on the distribution of power and responsibilities between the Federal Government and Indian tribes, as specified by Executive Order 13175 (65 FR 67249, November 9, 2000). This action also does not have Federalism implications because it does not have substantial direct effects on the States, on the relationship between the national government and the States, or on the distribution of power and responsibilities among the various levels of government, as specified in Executive Order 13132 (64 FR 43255, August 10, 1999). This action merely approves a State rule implementing a Federal standard, and does not alter the relationship or the distribution of power and responsibilities established in the Clean Air Act. This rule also is not subject to Executive Order 13045 ''Protection of Children from Environmental Health Risks and Safety Risks'' (62 FR 19885, April 23, 1997), because it is not economically significant.

In reviewing SIP submissions, EPA's role is to approve state choices, provided that they meet the criteria of the Clean Air Act. In this context, in the absence of a prior existing requirement for the State to use voluntary consensus standards (VCS), EPA has no authority to disapprove a SIP submission for failure to use VCS. It would thus be inconsistent with applicable law for EPA, when it reviews a SIP submission, to use VCS in place of a SIP submission that otherwise satisfies the provisions of the Clean Air Act. Thus, the requirements of section 12(d) of the National Technology Transfer and Advancement Act of 1995 (15 U.S.C. 272 note) do not apply. This rule does not impose an information collection burden under the provisions of the Paperwork Reduction Act of 1995 (44 U.S.C. 3501 *et seq.*).

The Congressional Review Act, 5 U.S.C. 801 *et seq.*, as added by the Small Business Regulatory Enforcement Fairness Act of 1996, generally provides that before a rule may take effect, the agency promulgating the rule must submit a rule report, which includes a copy of the rule, to each House of the Congress and to the Comptroller General of the United States. EPA will submit a report containing this rule and other required information to the U.S. Senate, the U.S. House of Representatives, and the Comptroller General of the United States prior to publication of the rule in the **Federal Register**. A major rule cannot take effect until 60 days after it is published in the **Federal Register**. This action is not a ''major rule'' as defined by 5 U.S.C. 804(2).

Under section 307(b)(1) of the Clean Air Act, petitions for judicial review of this action must be filed in the United States Court of Appeals for the appropriate circuit by March 14, 2005. Filing a petition for reconsideration by the Administrator of this final rule does not affect the finality of this rule for the purposes of judicial review nor does it extend the time within which a petition for judicial review may be filed, and shall not postpone the effectiveness of such rule or action. This action may not be challenged later in proceedings to enforce its requirements. (*See* section 307(b)(2).)

List of Subjects in 40 CFR Part 52

Environmental protection, Air pollution control, Incorporation by reference, Nitrogen dioxide, Ozone, Reporting and recordkeeping requirements, Volatile organic compounds.

Dated: December 13, 2004.

Kathleen C. Callahan,

Acting Regional Administrator, Region 2.

■ Part 52, chapter I, title 40 of the Code of Federal Regulations is amended as follows:

PART 52—[AMENDED]

■ 1. The authority citation for part 52 continues to read as follows:

Authority: 42 U.S.C. 7401 *et seq.*

Subpart HH—New York

■ 2. Section 52.1670 is amended by adding new paragraph (c)(106) to read as follows:

§ 52.1670 Identification of plan.

* * * * *

(c) * * *

(106) Revisions to the State Implementation Plan submitted on February 18, 2004, by the New York State Department of Environmental Conservation which consists of control measures that will achieve reductions in NO_X emissions from stationary combustion sources that will help achieve attainment of the national ambient air quality standard for ozone.

(i) Incorporation by reference:

(A) Regulation subpart 227–2 ''Reasonably Available Control Technology (RACT) for Oxides of Nitrogen (NO_X)'' of part 227 ''Stationary Combustion Installations'' of title 6 of the Official Compilation of Codes, Rules and Regulations of the State of New York (6NYCRR), filed on January 12, 2004, and effective on February 11, 2004.

■ 3. Section 52.1679 is amended by adding a new entry for part 215 under title 6 and revising the entry for part 227, subpart 227–2 under Title 6 as follows:

§ 52.1679 EPA-approved New York State regulations.

New York State regulation	State effective date	EPA approved date	Comments
Title 6:			
* * *	*	* *	*
Part 215, Open Fires	6/16/72	9/22/72, 37 FR 19814	
* * *	*	* *	*
Subpart 227–2, Reasonably Available Control Technology (RACT) for Oxides of Nitrogen (NO_X).	2/11/04	1/13/05 [insert publication and FR page citation of this notice]	
* * *	*	* *	*

[FR Doc. 05–712 Filed 1–12–05; 8:45 am]

BILLING CODE 6560–50–P

FEDERAL COMMUNICATIONS COMMISSION

47 CFR Part 64

[CC Docket No. 98–67, CG Docket No. 03–123; DA 04–3709]

Expiration of Waiver of Three-Way Calling Requirement for Providers of Telecommunications Relay Services

AGENCY: Federal Communications Commission.

ACTION: Expiration of waiver; request for comment.

SUMMARY: In this document, the Commission announces that the one-year waiver of the requirement that telecommunications relay service (TRS) providers (including providers of captioned telephone service) offer three-way calling will expire on February 25, 2005. This document seeks comment on whether TRS providers will be able to offer this feature as of that date, or whether it is necessary to extend this waiver. This document also seek comment on whether, instead of a waiver, the requirement might be modified or clarified, and, if so, how.

DATES: One-year waiver expires February 25, 2005. Interested parties may file comments in this proceeding on or before December 17, 2004. Reply comments may be filed on or before December 30, 2004.

ADDRESSES: Federal Communications Commission, 445 12th Street, SW., Washington, DC 20554.

FOR FURTHER INFORMATION CONTACT: Dana Jackson, Consumer & Governmental Affairs Bureau, Disability Rights Office at (202) 418–2247 (voice), (202) 418–7898 (TTY), or e-mail at *Dana.Jackson@fcc.gov.*

SUPPLEMENTARY INFORMATION: On July 17, 2003, the Commission released a *Second Report and Order, Order on Reconsideration (Second Improved TRS Order*), published at 68 FR 50973, August 25, 2003, in CC Docket No. 98–67; FCC 03–112. In the *Second Improved TRS Order,* the Commission required that TRS providers offer three-way calling as a standard feature of TRS. This is a summary of the Commission's document DA 04–3709, released November 30, 2004. When filing comments on expiration of waiver of three-way calling requirement for providers of TRS, please reference CC Docket No. 98–67 and CG Docket No. 03–123. Comments may be filed using the Commission's Electronic Comment Filing System (ECFS) or by filing paper copies. *See* Electronic Filing of Documents in Rulemaking Proceedings, 63 FR 24121, May 1, 1998. Comments filed through the ECFS can be sent as an electronic file via the Internet to *http://www.fcc.gov/e-file/ecfs.html.* Generally, only one copy of an electronic submission must be filed. If multiple docket or rulemaking numbers appear in the caption of this proceeding, however, commenters must transmit one electronic copy of the comment and reply comment to each docket or rulemaking number referenced in the caption. In completing the transmittal screen, commenters should include their full name, Postal Service mailing address, and the applicable docket or rulemaking number. Parties may also submit electronic comment and reply comment by Internet e-mail. To get filing instructions, commenters should send an e-mail to *ecfs@fcc.gov,* and should include the following words in the body of the message, ''get form <your e-mail address>.'' A sample form and directions will be sent in reply. Parties who choose to file by paper must file an original and four copies of each filing. If more than one docket or rulemaking number appears in the caption of this proceeding, commenters must submit two additional copies for each additional docket or rulemaking number. Filings can be sent by hand or messenger delivery, by electronic media, by commercial overnight courier, or by first-class or overnight U.S. Postal Services mail (although we continue to experience delays in receiving U.S. Postal Service mail). The Commission's contractor, Natek, Inc., will receive hand-delivered or messenger-delivered paper filings or electronic media for the Commission's Secretary at 236 Massachusetts Avenue, NE., Suite 110, Washington, DC 20002. The filing hours at this location are 8 a.m. to 7 p.m. All hand deliveries must be held together with rubber bands or fasteners. Any envelopes must be disposed of before entering the building. Commercial and electronic media sent by overnight mail (other than U.S. Postal Service Express Mail and Priority Mail) must be sent to 9300 East Hampton Drive, Capitol Heights, MD 20743. U.S. Postal Service first-class mail, Express Mail, and Priority Mail should be addressed to 445 12th Street, SW., Washington, DC 20554. All filings must be addressed to the Commission's Secretary, Marlene H. Dortch, Office of the Secretary, Federal Communications Commission, 445 12th Street, SW., Room TW–B204 Washington, DC 20554. Parties who choose to file by paper should also submit their comment and reply comment on diskette. These diskettes should be submitted, along with three paper copies, to: Dana Jackson, Consumer & Governmental Affairs Bureau, Disability Rights Office, 445 12th Street, SW., Room CY–A626, Washington, DC 20554. Such a submission should be on a 3.5 inch diskette formatted in an IBM compatible format using Word 97 or compatible software. The diskette should be accompanied by a cover letter and should be submitted in ''read only'' mode. The diskette should be clearly labeled with the commenter's name, proceeding (including the lead docket number in this case, CC Docket No. 98–67 and CG Docket No. 03–123, type of pleading (comment or reply comment), date of submission, and the name of the electronic file on the diskette. The label

should also include the following phrase ''Disk Copy—Not an Original.'' Each diskette should contain only one party's pleadings, preferably in a single electronic file. In addition, commenters must send diskette copies to the Commission's copy contractor, Best Copy and Printing (BCPI), Inc., Portals II, 445 12th Street, SW., Room CY–B402, Washington, DC 20554. Pursuant to section 1.1206 of the Commission's rules, 47 CFR 1.1206, this proceeding will be conducted as a permit-but-disclose proceeding in which ex parte communications are subject to disclosure. The full text of this document and copies of any subsequently filed documents in this matter will be available for public inspection and copying during regular business hours at the FCC Reference Information Center, Portals II, 445 12th Street, SW., Room CY–A257, Washington, DC 20554. This document and copies of subsequently filed documents in this matters may also be purchased from the Commission's duplicating contract, BCPI, Inc., Portals II, 445 12th Street, SW., Room CY–B402, Washington, DC 20554. Customers may contact BCPI, Inc. at their Web site *http://www.bcpiweb.com* or call 1–800–378–3160. To request materials in accessible formats for people with disabilities (Braille, large print, electronic files, audio format), send an e-mail to *fcc504@fcc.gov* or call the Consumer & Governmental Affairs Bureau at (202) 418–0530 (voice), (202) 418–0432 (TTY). This document can also be downloaded in Word or Portable Document Format (PDF) at: *http://www.fcc.gov/cgb/dro.*

Synopsis

In the June 17, 2003 *Second Improved TRS Order,* the Commission required that TRS providers offer three-way calling as a standard feature of TRS. In the August 1, 2003 *Declaratory Ruling,* the Commission recognized captioned telephone service as a type of TRS. (*See Telecommunications Relay Services and Speech-to-Speech Services for Individuals with Hearing and Speech Disabilities,* published at 68 FR 55898, September 29, 2003, in CC Docket No. 98–67; FCC 03–190. The *Declaratory Ruling* did not waive the requirement that providers of captioned telephone service offer a three-way calling feature. On September 24, 2003, AT&T Corp. (AT&T) filed a petition for limited reconsideration of the *Second Improved TRS Order.* (*See* AT&T, *AT&T Petition for Limited Reconsideration and for Waiver,* CC Docket No. 98–67, CG Docket No. 03–123 (filed September 24, 2003)). AT&T requested that the Commission waive the three-way calling requirement adopted in the *Second Improved TRS Order.* AT&T asserted that it was not possible for the TRS facility to set up a three-way call, subject to clarification regarding how three-way calling may be provided in compliance with the Commission's TRS regulations. On December 11, 2003, Ultratec, Inc. and Sprint Corporation filed a petition seeking clarification that the three-way calling requirement either does not apply to captioned telephone service or that a TRS provider complies with the rule regardless of the method used to set up the three-way call. (*See Petition for Clarification by Ultratec, Inc. and Sprint Corporation,* CC Docket No. 98–67, CG Docket No. 03–123 (file December 11, 2003)). On February 24, 2004, in response to these petitions, the Consumer & Governmental Affairs Bureau released an *Order* waiving for one year the requirement that TRS providers (including providers of captioned telephone service) offer three-way calling. (*Telecommunications Relay Services and Speech-to-Speech Services for Individuals with Hearing and Speech Disabilities,* CC Docket 98–67, DA 04–465, 19 FCC Rcd 2993 (February 24, 2004)). In view of the pending expiration date of the one-year February 24, 2004, waiver, the Commission now seek comment on whether this waiver should be left to expire or be extended, or whether the rule should be modified or clarified and, if so, how.

Federal Communications Commission.

Jay Keithley,

Deputy Chief, Consumer & Governmental Affairs Bureau.

[FR Doc. 05–651 Filed 1–12–05; 8:45 am]

BILLING CODE 6712–01–P

DEPARTMENT OF DEFENSE

48 CFR Part 206

[DFARS Case 2003–D017]

Defense Federal Acquisition Regulation Supplement; Competition Requirements; Correction

AGENCY: Department of Defense (DoD).

ACTION: Correction to final rule.

SUMMARY: DoD is issuing a correction to the final rule published at 69 FR 74990–74991 on December 15, 2004, pertaining to competition requirements. The correction shows that the change to 48 CFR part 206, section 206.001, revises only paragraph (b) of section 206.001.

EFFECTIVE DATES: December 15, 2004.

FOR FURTHER INFORMATION CONTACT: Ms. Michele Peterson, Defense Acquisition Regulations System, OUSD(AT&L)DPAP(DAR), IMD 3C132, 3062 Defense Pentagon, Washington, DC 20301–3062. Telephone (703) 602–0311; facsimile (703) 602–0350.

Correction

PART 206—[CORRECTED]

■ In the issue of Wednesday, December 15, 2004, on page 74991, in the second column, amendatory instruction 2 is corrected to read as follows:

■ 2. Section 206.001 is revised to read as follows:

206.001 Applicability.

(b) As authorized by 10 U.S.C. 1091, contracts awarded to individuals using the procedures at 237.104(b)(ii) are exempt from the competitive requirements of FAR part 6.

(S–70) Also excepted from this part are follow-on production contracts for products developed pursuant to the ''other transactions'' authority of 10 U.S.C. 2371 for prototype projects when—

(1) The other transaction agreement includes provisions for a follow-on production contract;

(2) The contracting officer receives sufficient information from the agreements officer and the project manager for the prototype other transaction agreement, which documents that the conditions set forth in 10 U.S.C. 2371 note, subsections (f)(2)(A) and (B) (*see* 32 CFR 3.9(d)), have been met; and

(3) The contracting officer establishes quantities and prices for the follow-on production contract that do not exceed the quantities and target prices established in the other transaction agreement.

Michele P. Peterson,

Editor, Defense Acquisition Regulations System.

[FR Doc. 05–760 Filed 1–12–05; 8:45 am]

BILLING CODE 5001–08–P

DEPARTMENT OF DEFENSE

48 CFR Parts 225 and 252

[DFARS Case 2004–D013]

Defense Federal Acquisition Regulation Supplement; Free Trade Agreements—Australia and Morocco

AGENCY: Department of Defense (DoD).

ACTION: Interim rule with request for comments.

SUMMARY: DoD has issued an interim rule amending the Defense Federal Acquisition Regulation Supplement

(DFARS) to implement new Free Trade Agreements with Australia and Morocco. In addition, the rule revises terminology relating to international trade agreements and the Trade Agreements Act, updates the list of ''least developed countries,'' and extends nondiscriminatory treatment to Caribbean Basin country construction material.

DATES: *Effective Date:* January 13, 2005.

Comment date: Comments on the interim rule should be submitted to the address shown below on or before March 14, 2005, to be considered in the formation of the final rule.

ADDRESSES: You may submit comments, identified by DFARS Case 2004–D013, using any of the following methods:

- Federal eRulemaking Portal: *http://www.regulations.gov*. Follow the instructions for submitting comments.
- Defense Acquisition Regulations Web site: *http://emissary.acq.osd.mil/dar/dfars.nsf/pubcomm*. Follow the instructions for submitting comments.
- E-mail: *dfars@osd.mil*. Include DFARS Case 2004–D013 in the subject line of the message.
- Fax: (703) 602–0350.
- Mail: Defense Acquisition Regulations Council, Attn: Ms. Amy Williams, OUSD(AT&L)DPAP(DAR), IMD 3C132, 3062 Defense Pentagon, Washington, DC 20301–3062.
- Hand Delivery/Courier: Defense Acquisition Regulations Council, Crystal Square 4, Suite 200A, 241 18th Street, Arlington, VA 22202–3402.

All comments received will be posted to *http://emissary.acq.osd.mil/dar/dfars.nsf*.

FOR FURTHER INFORMATION CONTACT: Ms. Amy Williams, (703) 602–0328.

SUPPLEMENTARY INFORMATION:

A. Background

This interim rule amends DFARS part 225 and corresponding provisions and clauses to implement new Free Trade Agreements with Australia and Morocco, as approved by Congress in the United States-Australia Free Trade Agreement Implementation Act (Pub. L. 108–286) and the United States-Morocco Free Trade Agreement Implementation Act (Pub. L. 108–302). The new Free Trade Agreements waive the applicability of the Buy American Act for some foreign supplies and construction materials from Australia and Morocco, and specify procurement procedures designed to ensure fairness. In addition, at the request of the United States Trade Representative and for consistency with the interim FAR rule published at 69 FR 77870 on December 28, 2004, this DFARS rule makes the following changes in terminology relating to trade agreements:

- Substitution of the term ''World Trade Organization Government Procurement Agreement'' in all places where the term ''Trade Agreements Act'' was used to mean the World Trade Organization Government Procurement Agreement.
- Redefinition of ''designated country'' to include World Trade Organization Government Procurement Agreement countries, Free Trade Agreement countries, least developed countries, and Caribbean Basin countries. Free Trade Agreement countries and Caribbean Basin countries are now also designated countries. Each of these terms will retain a separate definition because, in some instances, the regulation does not apply to all designated countries, but only to some of the specific subsets.
- A revised list of least developed countries that are designated as eligible countries under the Trade Agreements Act.
- Amendment of the clause at DFARS 252.225–7045, Balance of Payments Program—Construction Material Under Trade Agreements, to extend nondiscriminatory treatment to all designated country construction material, including Caribbean Basin country construction material. **Federal Register** notices issued by the United States Trade Representative under the Caribbean Basin Trade Initiative state that products of the listed Caribbean Basin countries shall continue to be treated as eligible products (unless excluded from duty-free treatment under 19 U.S.C. 2703(b)). This change is consistent with the definition of ''eligible product'' at 19 U.S.C. 2518(4).

This rule was not subject to Office of Management and Budget review under Executive Order 12866, dated September 30, 1993.

B. Regulatory Flexibility Act

DoD does not expect this rule to have a significant economic impact on a substantial number of small entities within the meaning of the Regulatory Flexibility Act, 5 U.S.C. 601, *et seq.* Although the rule opens up Government procurement to the products of Australia and Morocco, DoD does not believe there will be a significant economic impact on U.S. small businesses. DoD applies the trade agreements to only those non-defense items listed at DFARS 225.401–70. Acquisitions below $100,000 that are set aside for small businesses are exempt. Therefore, DoD has not performed an initial regulatory flexibility analysis. DoD invites comments from small businesses and other interested parties. DoD also will consider comments from small entities concerning the affected DFARS subparts in accordance with 5 U.S.C. 610. Such comments should be submitted separately and should cite DFARS Case 2004–D013.

C. Paperwork Reduction Act

This interim rule affects the certification and information collection requirements in the provisions at DFARS 252.225–7020 and 252.225–7035, currently approved under Office of Management and Budget Control Number 0704–0229. The impact, however, is negligible.

D. Determination To Issue an Interim Rule

A determination has been made under the authority of the Secretary of Defense that urgent and compelling reasons exist to publish an interim rule prior to affording the public an opportunity to comment. This interim rule implements new Free Trade Agreements with Australia and Morocco, as approved by Congress in the United States-Australia Free Trade Agreement Implementation Act (Pub. L. 108–286) and the United States-Morocco Free Trade Agreement Implementation Act (Pub. L. 108–302). These agreements waive the applicability of the Buy American Act for some foreign supplies and construction materials from Australia and Morocco, and specify procurement procedures designed to ensure fairness. The new Free Trade Agreements became effective on January 1, 2005. Comments received in response to this interim rule will be considered in the formation of the final rule.

List of Subjects in 48 CFR Parts 225 and 252

Government procurement.

Michele P. Peterson,

Editor, Defense Acquisition Regulations System.

■ Therefore, 48 CFR parts 225 and 252 are amended as follows:

■ 1. The authority citation for 48 CFR parts 225 and 252 continues to read as follows:

Authority: 41 U.S.C. 421 and 48 CFR Chapter 1.

PART 225—FOREIGN ACQUISITION

■ 2. Section 225.103 is amended by revising paragraph (a)(i)(B) to read as follows:

225.103 Exceptions.

(a)(i) * * *

(B) For procurements covered by the World Trade Organization Government

Procurement Agreement, the Under Secretary of Defense (Acquisition, Technology, and Logistics) has determined that it is inconsistent with the public interest to apply the Buy American Act to end products that are substantially transformed in the United States.

* * * * *

■ 3. Section 225.401–70 is amended by revising the first sentence to read as follows:

225.401–70 Products subject to trade agreements.

Acquisitions of end products in the following Federal supply groups (FSG) are covered by trade agreements if the value of the acquisition is at or above the applicable trade agreement threshold and no exception applies.

* * *

* * * * *

■ 4. Section 225.402 is revised to read as follows:

225.402 General.

To estimate the value of the acquisition, use the total estimated value of end products covered by trade agreements (*see* 225.401–70).

■ 5. Section 225.403 is amended by revising the section heading, paragraph (c) introductory text, and paragraph (c)(i) introductory text to read as follows:

225.403 World Trade Organization Government Procurement Agreement and Free Trade Agreements.

(c) For acquisitions of supplies covered by the World Trade Organization Government Procurement Agreement, acquire only U.S.-made, qualifying country, or designated country end products unless—

(i) The contracting officer determines that offers of U.S.-made, qualifying country, or designated country end products from responsive, responsible offerors are either—

* * * * *

■ 6. Section 225.502 is amended by revising paragraph (b) introductory text, paragraph (b)(i), and paragraph (c)(ii)(C) in the parenthetical to read as follows:

225.502 Application.

(b) Use the following procedures instead of the procedures in FAR 25.502(b) for acquisitions subject to the World Trade Organization Government Procurement Agreement:

(i) Consider only offers of U.S.-made, qualifying country, or designated country end products, except as permitted by 225.403.

* * * * *

(c) * * *

(ii) * * *

(C) * * * (If the low offer is a qualifying country offer from a country listed at 225.872–1(b), execute a determination in accordance with 225.872–4.)

* * * * *

■ 7. Section 225.901 is amended by revising paragraph (2) to read as follows:

225.901 Policy.

* * * * *

(2) Eligible products (end products but not components) under contracts covered by the World Trade Organization Government Procurement Agreement or a Free Trade Agreement; and

* * * * *

■ 8. Section 225.7501 is amended as follows:

■ a. By redesignating paragraphs (a)(3) through (a)(5) as paragraphs (a)(4) through (a)(6), respectively;

■ b. By adding a new paragraph (a)(3); and

■ c. By revising paragraph (b) to read as follows:

225.7501 Policy.

* * * * *

(a) * * *

(3) The acquisition is covered by the World Trade Organization Government Procurement Agreement;

* * * * *

(b) After receipt of offers—

(1) The evaluated low offer (*see* Subpart 225.5) is an offer of an end product that—

(i) Is a qualifying country end product;

(ii) Is an eligible product; or

(iii) Is a nonqualifying country end product, but application of the Balance of Payments Program evaluation factor would not result in award on a domestic offer; or

(2) The construction material is an eligible product; or

* * * * *

PART 252—SOLICITATION PROVISIONS AND CONTRACT CLAUSES

252.212–7001 [Amended]

■ 9. Section 252.212–7001 is amended as follows:

■ a. By revising the clause date to read ''(JAN 2005)'';

■ b. In paragraph (b), in entry 252.225–7021, by removing ''(DEC 2004)'' and adding in its place ''(JAN 2005)''; and

■ c. In paragraph (b), in entry 252.225–7036, by removing ''(DEC 2004)'' and ''(JAN 2004)'' and adding in both places ''(JAN 2005)''.

■ 10. Section 252.225–7013 is amended by revising the clause date, paragraph (a)(2), paragraph (h) introductory text, paragraph (h)(11), and paragraph (i) introductory text to read as follows:

252.225–7013 Duty-Free Entry.

* * * * *

Duty-Free Entry (Jan 2005)

(a) * * *

(2) *Eligible product* means—

(i) *Designated country end product* as defined in the Trade Agreements clause of this contract;

(ii) *Free Trade Agreement country end product* as defined in the Trade Agreements clause of this contract;

(iii) *End product of Australia, Canada, Chile, Mexico, or Singapore* as defined in the Buy American Act—Free Trade Agreements—Balance of Payments Program clause of this contract; or

(iv) *Canadian end product* as defined in Alternate I of the Buy American Act—Free Trade Agreements—Balance of Payments Program clause of this contract.

* * * * *

(h) The Contractor shall notify the Administrative Contracting Officer (ACO) in writing of any purchase of eligible products or qualifying country supplies to be accorded duty-free entry, that are to be imported into the United States for delivery to the Government or for incorporation in end items to be delivered to the Government. The Contractor shall furnish the notice to the ACO immediately upon award to the supplier and shall include in the notice—

* * * * *

(11) Country of origin; and

* * * * *

(i) This clause does not apply to purchases of eligible products or qualifying country supplies in connection with this contract if—

* * * * *

■ 11. Section 252.225–7020 is revised to read as follows:

252.225–7020 Trade Agreements Certificate.

As prescribed in 225.1101(5), use the following provision:

Trade Agreements Certificate (Jan 2005)

(a) *Definitions. Designated country end product, nondesignated country end product, qualifying country end product,* and *U.S.-made end product* have the meanings given in the Trade Agreements clause of this solicitation.

(b) *Evaluation.* The Government—

(1) Will evaluate offers in accordance with the policies and procedures of part 225 of the Defense Federal Acquisition Regulation Supplement; and

(2) Will consider only offers of end products that are U.S.-made, qualifying country, or designated country end products unless—

(i) There are no offers of such end products;

(ii) The offers of such end products are insufficient to fulfill the Government's requirements; or

(iii) A national interest waiver has been granted.

(c) *Certification and identification of country of origin.*

(1) For all line items subject to the Trade Agreements clause of this solicitation, the offeror certifies that each end product to be delivered under this contract, except those listed in paragraph (c)(2) of this provision, is a U.S.-made, qualifying country, or designated country end product.

(2) The following supplies are other nondesignated country end products:

(*Line Item Number*) (*Country of Origin*)

(End of provision)

■ 12. Section 252.225–7021 is amended by revising the clause date and paragraphs (a) through (c) to read as follows:

252.225–7021 Trade Agreements.

* * * * *

Trade Agreements (Jan 2005)

(a) *Definitions.* As used in this clause—

(1) *Caribbean Basin country end product*—

(i) Means an article that—

(A) Is wholly the growth, product, or manufacture of a Caribbean Basin country; or

(B) In the case of an article that consists in whole or in part of materials from another country or instrumentality, has been substantially transformed in a Caribbean Basin country into a new and different article of commerce with a name, character, or use distinct from that of the article or articles from which it was transformed. The term refers to a product offered for purchase under a supply contract, but for purposes of calculating the value of the end product includes services (except transportation services) incidental to its supply, provided that the value of those incidental services does not exceed the value of the product itself; and

(ii) Excludes products, other than petroleum and any product derived from petroleum, that are not granted duty-free treatment under the Caribbean Basin Economic Recovery Act (19 U.S.C. 2703(b)). These exclusions presently consist of—

(A) Textiles, apparel articles, footwear, handbags, luggage, flat goods, work gloves, leather wearing apparel, and handloomed, handmade, or folklore articles that are not granted duty-free status in the Harmonized Tariff Schedule of the United States (HTSUS);

(B) Tuna, prepared or preserved in any manner in airtight containers; and

(C) Watches and watch parts (including cases, bracelets, and straps) of whatever type, including, but not limited to, mechanical, quartz digital, or quartz analog, if such watches or watch parts contain any material that is the product of any country to which the HTSUS column 2 rates of duty (HTSUS General Note 3(b)) apply.

(2) *Component* means an article, material, or supply incorporated directly into an end product.

(3) *Designated country* means—

(i) A World Trade Organization Government Procurement Agreement (WTO GPA) country (Aruba, Austria, Belgium, Canada, Cyprus, Czech Republic, Denmark, Estonia, Finland, France, Germany, Greece, Hong Kong, Hungary, Iceland, Ireland, Israel, Italy, Japan, Korea (Republic of), Latvia, Liechtenstein, Lithuania, Luxembourg, Malta, Netherlands, Norway, Poland, Portugal, Singapore, Slovak Republic, Slovenia, Spain, Sweden, Switzerland, or the United Kingdom);

(ii) A Free Trade Agreement country (Australia, Canada, Chile, Mexico, Morocco, or Singapore);

(iii) A least developed country (Afghanistan, Angola, Bangladesh, Benin, Bhutan, Burkina Faso, Burundi, Cambodia, Cape Verde, Central African Republic, Chad, Comoros, Democratic Republic of Congo, Djibouti, East Timor, Equatorial Guinea, Eritrea, Ethiopia, Gambia, Guinea, Guinea-Bissau, Haiti, Kiribati, Laos, Lesotho, Madagascar, Malawi, Maldives, Mali, Mauritania, Mozambique, Nepal, Niger, Rwanda, Samoa, Sao Tome and Principe, Senegal, Sierra Leone, Solomon Islands, Somalia, Tanzania, Togo, Tuvalu, Uganda, Vanuatu, Yemen, or Zambia); or

(iv) A Caribbean Basin country (Antigua and Barbuda, Aruba, Bahamas, Barbados, Belize, British Virgin Islands, Costa Rica, Dominica, Dominican Republic, El Salvador, Grenada, Guatemala, Guyana, Haiti, Honduras, Jamaica, Montserrat, Netherlands Antilles, Nicaragua, St. Kitts and Nevis, St. Lucia, St. Vincent and the Grenadines, or Trinidad and Tobago).

(4) *Designated country end product* means a WTO GPA country end product, a Free Trade Agreement country end product, a least developed country end product, or a Caribbean Basin country end product.

(5) *End product* means those articles, materials, and supplies to be acquired under this contract for public use.

(6) *Free Trade Agreement country end product* means an article that—

(i) Is wholly the growth, product, or manufacture of a Free Trade Agreement country; or

(ii) In the case of an article that consists in whole or in part of materials from another country or instrumentality, has been substantially transformed in a Free Trade Agreement country into a new and different article of commerce with a name, character, or use distinct from that of the article or articles from which it was transformed. The term refers to a product offered for purchase under a supply contract, but for purposes of calculating the value of the end product includes services (except transportation services) incidental to its supply, provided that the value of those incidental services does not exceed the value of the product itself.

(7) *Least developed country end product* means an article that—

(i) Is wholly the growth, product, or manufacture of a least developed country; or

(ii) In the case of an article that consists in whole or in part of materials from another country or instrumentality, has been substantially transformed in a least developed country into a new and different article of commerce with a name, character, or use distinct from that of the article or articles from which it was transformed. The term refers to a product offered for purchase under a supply contract, but for purposes of calculating the value of the end product includes services (except transportation services) incidental to its supply, provided that the value of those incidental services does not exceed the value of the product itself.

(8) *Nondesignated country end product* means any end product that is not a U.S.-made end product or a designated country end product.

(9) *Qualifying country* means any country set forth in subsection 225.872–1 of the Defense Federal Acquisition Regulation Supplement.

(10) *Qualifying country end product* means—

(i) An unmanufactured end product mined or produced in a qualifying country; or

(ii) An end product manufactured in a qualifying country if the cost of the following types of components exceeds 50 percent of the cost of all its components:

(A) Components mined, produced, or manufactured in a qualifying country.

(B) Components mined, produced, or manufactured in the United States.

(C) Components of foreign origin of a class or kind for which the Government has determined that sufficient and reasonably available commercial quantities of a satisfactory quality are not mined, produced, or manufactured in the United States.

(11) *United States* means the United States, its possessions, Puerto Rico, and any other place subject to its jurisdiction, but does not include leased bases or trust territories.

(12) *U.S.-made end product* means an article that—

(i) Is mined, produced, or manufactured in the United States; or

(ii) Is substantially transformed in the United States into a new and different article of commerce with a name, character, or use distinct from that of the article or articles from which it was transformed.

(b) Unless otherwise specified, this clause applies to all items in the Schedule.

(c) The Contractor shall deliver under this contract only U.S.-made, qualifying country, or designated country end products unless—

(1) In its offer, the Contractor specified delivery of other nondesignated country end products in the Trade Agreements Certificate provision of the solicitation; and

(2)(i) Offers of U.S.-made end products or qualifying, designated, Caribbean Basin, or Free Trade Agreement country end products from responsive, responsible offerors are either not received or are insufficient to fill the Government's requirements; or

(ii) A national interest waiver has been granted.

* * * * *

■ 13. Section 252.225–7035 is revised to read as follows:

252.225–7035 Buy American Act—Free Trade Agreements—Balance of Payments Program Certificate.

As prescribed in 225.1101(9), use the following provision:

Buy American Act—Free Trade Agreements—Balance of Payments Program Certificate (Jan 2005)

(a) *Definitions. Domestic end product, end product of Australia, Canada, Chile, Mexico, or Singapore, foreign end product, qualifying country end product,* and *United States* have the meanings given in the Buy American Act—Free Trade Agreements—Balance of Payments Program clause of this solicitation.

(b) *Evaluation.* The Government—

(1) Will evaluate offers in accordance with the policies and procedures of part 225 of the Defense Federal Acquisition Regulation Supplement; and

(2) For line items subject to Free Trade Agreements, will evaluate offers of qualifying country end products or end products of Australia, Canada, Chile, Mexico, or Singapore without regard to the restrictions of the Buy American Act or the Balance of Payments Program.

(c) *Certifications and identification of country of origin.*

(1) For all line items subject to the Buy American Act—Free Trade Agreements—Balance of Payments Program clause of this solicitation, the offeror certifies that—

(i) Each end product, except the end products listed in paragraph (c)(2) of this provision, is a domestic end product; and

(ii) Components of unknown origin are considered to have been mined, produced, or manufactured outside the United States or a qualifying country.

(2) The offeror shall identify all end products that are not domestic end products.

(i) The offeror certifies that the following supplies are qualifying country (except Australian or Canadian) end products:

(*Line Item Number*) (*Country of Origin*)

(ii) The offeror certifies that the following supplies are end products of Australia, Canada, Chile, Mexico, or Singapore:

(*Line Item Number*) (*Country of Origin*)

(iii) The following supplies are other foreign end products, including end products manufactured in the United States that do not qualify as domestic end products.

(*Line Item Number*) (*Country of Origin (If known)*)

(End of provision)

Alternate I (Jan 2005)

As prescribed in 225.1101(9), substitute the phrase ''Canadian end product'' for the phrase ''end product of Australia, Canada, Chile, Mexico, or Singapore'' in paragraph (a) of the basic provision; and substitute the phrase ''Canadian end products'' for the phrase ''end products of Australia, Canada, Chile, Mexico, or Singapore'' in paragraphs (b) and (c)(2)(ii) of the basic provision.

■ 14. Section 252.225–7036 is amended as follows:

■ a. By revising the clause date and paragraphs (a) and (c);

■ b. In Alternate I by removing ''(JAN 2004)'' and adding in its place ''(JAN 2005)'';

■ c. In Alternate I introductory text by removing ''(a)(6)'' both places it appears and adding in its place ''(a)(4)''; and

■ d. In Alternate I by redesignating paragraph (a)(6) as paragraph (a)(4). The revised text reads as follows:

252.225–7036 Buy American Act—Free Trade Agreements—Balance of Payments Program.

* * * * *

Buy American Act—Free Trade Agreements—Balance of Payments Program (Jan 2005)

(a) *Definitions.* As used in this clause—

(1) *Component* means an article, material, or supply incorporated directly into an end product.

(2) *Domestic end product* means—

(i) An unmanufactured end product that has been mined or produced in the United States; or

(ii) An end product manufactured in the United States if the cost of its qualifying country components and its components that are mined, produced, or manufactured in the United States exceeds 50 percent of the cost of all its components. The cost of components includes transportation costs to the place of incorporation into the end product and U.S. duty (whether or not a duty-free entry certificate is issued). Scrap generated, collected, and prepared for processing in the United States is considered domestic. A component is considered to have been mined, produced, or manufactured in the United States (regardless of its source in fact) if the end product in which it is incorporated is manufactured in the United States and the component is of a class or kind for which the Government has determined that—

(A) Sufficient and reasonably available commercial quantities of a satisfactory quality are not mined, produced, or manufactured in the United States; or

(B) It is inconsistent with the public interest to apply the restrictions of the Buy American Act.

(3) *End product* means those articles, materials, and supplies to be acquired under this contract for public use.

(4) *End product of Australia, Canada, Chile, Mexico, or Singapore* means an article that—

(i) Is wholly the growth, product, or manufacture of Australia, Canada, Chile, Mexico, or Singapore; or

(ii) In the case of an article that consists in whole or in part of materials from another country or instrumentality, has been substantially transformed in Australia, Canada, Chile, Mexico, or Singapore into a new and different article of commerce with a name, character, or use distinct from that of the article or articles from which it was transformed. The term refers to a product offered for purchase under a supply contract, but for purposes of calculating the value of the end product includes services (except transportation services) incidental to its supply, provided that the value of those incidental services does not exceed the value of the product itself.

(5) *Foreign end product* means an end product other than a domestic end product.

(6) *Qualifying country* means any country set forth in subsection 225.872–1 of the Defense Federal Acquisition Regulation Supplement.

(7) *Qualifying country component* means a component mined, produced, or manufactured in a qualifying country.

(8) *Qualifying country end product* means—

(i) An unmanufactured end product mined or produced in a qualifying country; or

(ii) An end product manufactured in a qualifying country if the cost of the following types of components exceeds 50 percent of the cost of all its components:

(A) Components mined, produced, or manufactured in a qualifying country.

(B) Components mined, produced, or manufactured in the United States.

(C) Components of foreign origin of a class or kind for which the Government has determined that sufficient and reasonably available commercial quantities of a satisfactory quality are not mined, produced, or manufactured in the United States.

(9) *United States* means the United States, its possessions, Puerto Rico, and any other place subject to its jurisdiction, but does not include leased bases or trust territories.

* * * * *

(c) The Contractor shall deliver under this contract only domestic end products unless, in its offer, it specified delivery of qualifying country end products, end products of Australia, Canada, Chile, Mexico, or Singapore, or other foreign end products in the Buy American Act—Free Trade Agreements—Balance of Payments Program Certificate provision of the solicitation. If the Contractor certified in its offer that it will deliver a qualifying country end product or an end product of Australia, Canada, Chile, Mexico, or Singapore, the Contractor shall deliver a qualifying country end product, an end product of Australia, Canada, Chile, Mexico, or Singapore, or, at the Contractor's option, a domestic end product.

* * * * *

252.225–7044 [Amended]

■ 15. Section 252.225–7044 is amended as follows:

■ a. By revising the clause date to read ''(JAN 2005)''; and

■ b. In paragraph (a), in the definition of ''Cost of components'', in the second sentence of paragraph (2), by removing ''end product'' and adding in its place ''construction material''.

■ 16. Section 252.225–7045 is revised to read as follows:

252.225–7045 Balance of Payments Program—Construction Material Under Trade Agreements.

As prescribed in 225.7503(b), use the following clause:

Balance of Payments Program—Consturction Material Under Trade Agreements (Jan 2005)

(a) *Definitions.* As used in this clause—

Caribbean Basin country construction material means a construction material that—

-

(1) Is wholly the growth, product, or manufacture of a Caribbean Basin country; or

(2) In the case of a construction material that consists in whole or in part of materials from another country, has been substantially transformed in a Caribbean Basin country into a new and different construction material distinct from the materials from which it was transformed.

Component means any article, material, or supply incorporated directly into construction material.

Construction material means an article, material, or supply brought to the construction site by the Contractor or a subcontractor for incorporation into the building or work. The term also includes an item brought to the site preassembled from articles, materials, or supplies. However, emergency life safety systems, such as emergency lighting, fire alarm, and audio evacuation systems, that are discrete systems incorporated into a public building or work and that are produced as complete systems, are evaluated as a single and distinct construction material regardless of when or how the individual parts or components of those systems are delivered to the construction site. Materials purchased directly by the Government are supplies, not construction material.

Cost of components means—

(1) For components purchased by the Contractor, the acquisition cost, including transportation costs to the place of incorporation into the end product (whether or not such costs are paid to a domestic firm), and any applicable duty (whether or not a duty-free entry certificate is issued); or

(2) For components manufactured by the Contractor, all costs associated with the manufacture of the component, including transportation costs as described in paragraph (1) of this definition, plus allocable overhead costs, but excluding profit. Cost of components does not include any costs associated with the manufacture of the construction material.

Designated country means—

(1) A World Trade Organization Government Procurement Agreement (WTO GPA) country (Aruba, Austria, Belgium, Canada, Cyprus, Czech Republic, Denmark, Estonia, Finland, France, Germany, Greece, Hong Kong, Hungary, Iceland, Ireland, Israel, Italy, Japan, Korea (Republic of), Latvia, Liechtenstein, Lithuania, Luxembourg, Malta, Netherlands, Norway, Poland, Portugal, Singapore, Slovak Republic, Slovenia, Spain, Sweden, Switzerland, or the United Kingdom);

(2) A Free Trade Agreement country (Australia, Canada, Chile, Mexico, Morocco, or Singapore);

(3) A least developed country (Afghanistan, Angola, Bangladesh, Benin, Bhutan, Burkina Faso, Burundi, Cambodia, Cape Verde, Central African Republic, Chad, Comoros, Democratic Republic of Congo, Djibouti, East Timor, Equatorial Guinea, Eritrea, Ethiopia, Gambia, Guinea, Guinea-Bissau, Haiti, Kiribati, Laos, Lesotho, Madagascar, Malawi, Maldives, Mali, Mauritania, Mozambique, Nepal, Niger, Rwanda, Samoa, Sao Tome and Principe, Senegal, Sierra Leone, Solomon Islands, Somalia, Tanzania, Togo, Tuvalu, Uganda, Vanuatu, Yemen, or Zambia); or

(4) A Caribbean Basin country (Antigua and Barbuda, Aruba, Bahamas, Barbados, Belize, British Virgin Islands, Costa Rica, Dominica, Dominican Republic, El Salvador, Grenada, Guatemala, Guyana, Haiti, Honduras, Jamaica, Montserrat, Netherlands Antilles, Nicaragua, St. Kitts and Nevis, St. Lucia, St. Vincent and the Grenadines, or Trinidad and Tobago).

Designated country construction material means a construction material that is a WTO GPA country construction material, a Free Trade Agreement country construction material, a least developed country construction material, or a Caribbean Basin country construction material.

Domestic construction material means—

(1) An unmanufactured construction material mined or produced in the United States; or

(2) A construction material manufactured in the United States, if the cost of its components mined, produced, or manufactured in the United States exceeds 50 percent of the cost of all its components. Components of foreign origin of the same class or kind for which nonavailability determinations have been made are treated as domestic.

Free Trade Agreement country construction material means a construction material that—

(1) Is wholly the growth, product, or manufacture of a Free Trade Agreement country; or

(2) In the case of a construction material that consists in whole or in part of materials from another country, has been substantially transformed in a Free Trade Agreement country into a new and different construction material distinct from the material from which it was transformed.

Least developed country construction material means a construction material that—

(1) Is wholly the growth, product, or manufacture of a least developed country; or

(2) In the case of a construction material that consists in whole or in part of materials from another country has been substantially transformed in a least developed country into a new and different construction material distinct from the materials from which it was transformed.

United States means the 50 States and the District of Columbia, U.S. territories and possessions, Puerto Rico, the Northern Mariana Islands, and any other place subject to U.S. jurisdiction, but does not include leased bases.

WTO GPA country construction material means a construction material that—

(1) Is wholly the growth, product, or manufacture of a WTO GPA country; or

(2) In the case of a construction material that consists in whole or in part of materials from another country, has been substantially transformed in a WTO GPA country into a new and different construction material distinct from the materials from which it was transformed.

(b) This clause implements the Balance of Payments Program by providing a preference for domestic construction material. In addition, the Contracting Officer has determined that the WTO GPA and Free Trade Agreements apply to this acquisition. Therefore, the Balance of Payments Program restrictions are waived for designated country construction materials.

(c) The Contractor shall use only domestic or designated country construction material in performing this contract, except for—

(1) Construction material valued at or below the simplified acquisition threshold in part 2 of the Federal Acquisition Regulation; or

(2) The construction material or components listed by the Government as follows:

[Contracting Officer to list applicable excepted materials or indicate ''none'']

(End of clause)

Alternate I (Jan 2005)

As prescribed in 225.7503(b), delete the definitions of ''designated country'' and ''designated country construction material'' from the definitions in paragraph (a) of the basic clause, add the following definition of ''Australian, Chilean, or Moroccan construction material'' to paragraph (a) of the basic clause, and substitute the following paragraphs (b) and (c) for paragraphs (b) and (c) of the basic clause:

Australian, Chilean, or Moroccan construction material means a construction material that—

(1) Is wholly the growth, product, or manufacture of Australia, Chile, or Morocco; or

(2) In the case of a construction material that consists in whole or in part of materials from another country, has been substantially transformed in Australia, Chile, or Morocco into a new and different construction material distinct from the materials from which it was transformed.

(b) This clause implements the Balance of Payments Program by providing a preference for domestic construction material. In addition, the Contracting Officer has determined that the WTO GPA and all Free Trade Agreements except NAFTA apply to this acquisition. Therefore, the Balance of Payments Program restrictions are waived for WTO GPA country, Australian, Chilean, or Moroccan, least developed country, or Caribbean Basin country construction material.

(c) The Contractor shall use only domestic, WTO GPA country, Australian, Chilean, or Moroccan, least developed country, or Caribbean Basin country construction material in performing this contract, except for—

(1) Construction material valued at or below the simplified acquisition threshold in part 2 of the Federal Acquisition Regulation; or

(2) The construction material or components listed by the Government as follows:

[Contracting Officer to list applicable excepted materials or indicate ''none'']

[FR Doc. 05–759 Filed 1–12–05; 8:45 am]

BILLING CODE 5001–08–P

DEPARTMENT OF TRANSPORTATION

Research and Special Programs Administration

49 CFR Parts 171, 172, 173, and 175

[Docket No. RSPA–04–19886 (HM–224E)]

RIN 2137–AE05

Hazardous Materials; Prohibition on the Transportation of Primary Lithium Batteries and Cells Aboard Passenger Aircraft; Notice of Public Meeting

AGENCY: Research and Special Programs Administration (RSPA), DOT.

ACTION: Notice of public meeting.

SUMMARY: This notice announces a public meeting to be held on January 27, 2005, to solicit public comments on amendments to the Hazardous Materials Regulations adopted by RSPA in an interim final rule published on December 15, 2004. This interim final rule imposed a limited prohibition on offering for transportation and transportation of primary (non-rechargeable) lithium batteries and cells as cargo aboard passenger-carrying aircraft.

DATES: *Comments date*. Submit comments for presentation at the public meeting by January 20, 2005. We will consider comments received during this public meeting in making our decision on a final rule. Submit comments on the interim final rule by February 14, 2005.

Public Meeting Date. The public meeting will be held from 9:30 a.m. to 4 p.m. on Thursday, January 27, 2005.

ADDRESSES: *Public Meeting*. The public meeting will be held in Room 2230 at the U.S. Department of Transportation Headquarters Building, 400 Seventh Street, SW., Washington, DC. For information on facilities or services for persons with disabilities or to request special assistance at the meeting, please contact Mr. Darral Relerford at 202–366–8553 as soon as possible.

Comments. Written comments on the interim final rule may be submitted at the public meeting, or sent by mail to Dockets Management System, U.S. Department of Transportation PL–401, 400 Seventh Street, SW., Washington, DC 20590–0001. Comments should identify Docket Number RSPA–04–19886 (HM–224E) and be submitted in 2 copies. Comments may also be hand delivered to PL–401 on the Plaza level of the Nassif Building, 400 Seventh Street, SW., Washington, DC, between 9 a.m. and 5 p.m., Monday through Friday, except Federal holidays. You may also provide electronic comments via the DOT Web site at: *http://dms.dot.gov*. Follow the instructions for submitting comments on the DOT electronic docket site.

FOR FURTHER INFORMATION CONTACT: Darral Relerford (202) 366–8553, Office of Hazardous Materials Standards, (202) 366–8553, Research and Special Programs Administration: or John A. Gale, (202) 366–8553, Office of Hazardous Materials Standards, (202) 366–8553, Research and Special Programs Administration. Any person wishing to present an oral statement at the public meeting should notify Mr. Relerford before the public meeting.

SUPPLEMENTARY INFORMATION:

Background

On December 15, 2004, the Research and Special Programs Administration (RSPA, we) published an interim final rule (IFR) (69 FR 75207) under Docket RSPA–04–19886 (HM–224E) imposing a limited prohibition on offering for transportation and transportation of primary (non-rechargeable) lithium batteries and cells as cargo aboard passenger-carrying aircraft and equipment containing or packed with large primary lithium batteries. These prohibitions took effect on December 29, 2004. The IFR applies to both foreign and domestic passenger-carrying aircraft entering, leaving, or operating in the United States and to persons offering primary lithium batteries and cells for transportation as cargo on any passenger-carrying aircraft. The IFR allows the carriage of lithium batteries or devices containing lithium batteries that are transported for personal use by a passenger in carry-on or checked luggage, with certain limits. In addition, the IFR allows the shipment of equipment that contains or is packed with small primary lithium batteries with certain limits, and the continued shipment of secondary (rechargeable) lithium batteries (*e.g.*, lithium ion batteries). The IFR also requires packages of primary lithium batteries and cells that are excepted from classification as a Class 9 (miscellaneous) hazardous material, to be marked when offered for transport as cargo in any mode, to indicate that they are forbidden for transport aboard passenger-carrying aircraft.

Public Meeting

To facilitate public comments on the IFR, we are hosting a public meeting on January 27, 2005. The public meeting will provide an informal forum for interested persons to offer comments on the HM–224E IFR. A transcript of this meeting will be prepared and submitted to the docket. We anticipate significant public interest in this rulemaking; therefore, we ask that you limit your remarks to 10 minutes to assure that all participants have an opportunity to speak. The meeting may conclude earlier than scheduled if all persons wishing to offer comments have been heard.

Issued in Washington, DC on January 7, 2005.

Frits Wybenga,

Deputy Associate Administrator for Hazardous Materials Safety.

[FR Doc. 05–736 Filed 1–12–05; 8:45 am]

BILLING CODE 4910–60–P

DEPARTMENT OF COMMERCE

National Oceanic and Atmospheric Administration

50 CFR Part 229

[Docket No. 030221039–5006–17; I.D. 010705A]

Taking of Marine Mammals Incidental to Commercial Fishing Operations; Atlantic Large Whale Take Reduction Plan (ALWTRP)

AGENCY: National Marine Fisheries Service (NMFS), National Oceanic and Atmospheric Administration (NOAA), Commerce.

ACTION: Temporary rule.

SUMMARY: The Assistant Administrator for Fisheries (AA), NOAA, announces temporary restrictions consistent with the requirements of the ALWTRP's implementing regulations. These regulations apply to lobster trap/pot and anchored gillnet fishermen in an area totaling approximately 1,889 square nautical miles (nm^2) (6,479.1 km^2), east of Portland, ME, for 15 days. The purpose of this action is to provide protection to an aggregation of North Atlantic right whales (right whales).

DATES: Effective beginning at 0001 hours January 15, 2005, through 2400 hours January 29, 2005.

ADDRESSES: Copies of the proposed and final Dynamic Area Management (DAM) rules, Environmental Assessments (EAs), Atlantic Large Whale Take Reduction Team (ALWTRT) meeting summaries, and progress reports on implementation of the ALWTRP may also be obtained by writing Diane Borggaard, NMFS/Northeast Region, One Blackburn Drive, Gloucester, MA 01930.

FOR FURTHER INFORMATION CONTACT: Diane Borggaard, NMFS/Northeast Region, 978–281–9328 x6503; or Kristy

Long, NMFS, Office of Protected Resources, 301–713–1401.

SUPPLEMENTARY INFORMATION:

Electronic Access

Several of the background documents for the ALWTRP and the take reduction planning process can be downloaded from the ALWTRP web site at *http://www.nero.noaa.gov/whaletrp/*.

Background

The ALWTRP was developed pursuant to section 118 of the Marine Mammal Protection Act (MMPA) to reduce the incidental mortality and serious injury of three endangered species of whales (right, fin, and humpback) as well as to provide conservation benefits to a fourth non-endangered species (minke) due to incidental interaction with commercial fishing activities. The ALWTRP, implemented through regulations codified at 50 CFR 229.32, relies on a combination of fishing gear modifications and time/area closures to reduce the risk of whales becoming entangled in commercial fishing gear (and potentially suffering serious injury or mortality as a result).

On January 9, 2002, NMFS published the final rule to implement the ALWTRP's DAM program (67 FR 1133). On August 26, 2003, NMFS amended the regulations by publishing a final rule, which specifically identified gear modifications that may be allowed in a DAM zone (68 FR 51195). The DAM program provides specific authority for NMFS to restrict temporarily on an expedited basis the use of lobster trap/pot and anchored gillnet fishing gear in areas north of 40° N. lat. to protect right whales. Under the DAM program, NMFS may: (1) require the removal of all lobster trap/pot and anchored gillnet fishing gear for a 15–day period; (2) allow lobster trap/pot and anchored gillnet fishing within a DAM zone with gear modifications determined by NMFS to sufficiently reduce the risk of entanglement; and/or (3) issue an alert to fishermen requesting the voluntary removal of all lobster trap/pot and anchored gillnet gear for a 15–day period and asking fishermen not to set any additional gear in the DAM zone during the 15–day period.

A DAM zone is triggered when NMFS receives a reliable report from a qualified individual of three or more right whales sighted within an area (75 nm^2 (139 km^2)) such that right whale density is equal to or greater than 0.04 right whales per nm^2 (1.85 km^2). A qualified individual is an individual ascertained by NMFS to be reasonably able, through training or experience, to identify a right whale. Such individuals include, but are not limited to, NMFS staff, U.S. Coast Guard and Navy personnel trained in whale identification, scientific research survey personnel, whale watch operators and naturalists, and mariners trained in whale species identification through disentanglement training or some other training program deemed adequate by NMFS. A reliable report would be a credible right whale sighting.

On January 4, 2005, an aerial-based survey reported a sighting of 24 right whales in the proximity 43° 23.7′ N. latitude and 68° 13′ W. longitude. This position lies east of Portland, ME. After conducting an investigation, NMFS ascertained that the report came from a qualified individual and determined that the report was reliable. Thus, NMFS has received a reliable report from a qualified individual of the requisite right whale density to trigger the DAM provisions of the ALWTRP.

Once a DAM zone is triggered, NMFS determines whether to impose restrictions on fishing and/or fishing gear in the zone. This determination is based on the following factors, including but not limited to: the location of the DAM zone with respect to other fishery closure areas, weather conditions as they relate to the safety of human life at sea, the type and amount of gear already present in the area, and a review of recent right whale entanglement and mortality data.

NMFS has reviewed the factors and management options noted above relative to the DAM under consideration. As a result of this review, NMFS prohibits lobster trap/pot and anchored gillnet gear in this area during the 15–day restricted period unless it is modified in the manner described in this temporary rule. Because the January 4 right whale sightings occurred within the area of a previously identified DAM zone triggered by the December 6, 2004, aerial-based sighting of 7 right whales (69 FR 75862, December 20, 2004), the coordinates for this DAM zone will encompass the same area, which is bound by the following coordinates:

43°45′N, 68°32′W (NW Corner)
43°45′N, 67°30′W
43°33′N, 67°30′W following the Hague line south to
43°00′N, 67°42′W
43°00′N, 68°32′W

In addition to those gear modifications currently implemented under the ALWTRP at 50 CFR 229.32, the following gear modifications are required in the DAM zone. If the requirements and exceptions for gear modification in the DAM zone, as described below, differ from other ALWTRP requirements for any overlapping areas and times, then the more restrictive requirements will apply in the DAM zone. Special note for gillnet fisherman: A portion of this DAM zone overlaps with the Harbor Porpoise Take Reduction Plan's Offshore Closure Area. This DAM action does not supersede the Harbor Porpoise Take Reduction Plan regulations found at 50 CFR 229.33.

Lobster Trap/Pot Gear

Fishermen utilizing lobster trap/pot gear within the portion of the Northern Nearshore Lobster Waters that overlap with the DAM zone are required to utilize all of the following gear modifications while the DAM zone is in effect:

1. Groundlines must be made of either sinking or neutrally buoyant line. Floating groundlines are prohibited;
2. All buoy lines must be made of either sinking or neutrally buoyant line, except the bottom portion of the line, which may be a section of floating line not to exceed one-third the overall length of the buoy line;
3. Fishermen are allowed to use two buoy lines per trawl; and
4. A weak link with a maximum breaking strength of 600 lb (272.4 kg) must be placed at all buoys.

Fishermen utilizing lobster trap/pot gear within the portion of the Offshore Lobster Waters Area that overlap with the DAM zone are required to utilize all of the following gear modifications while the DAM zone is in effect:

1. Groundlines must be made of either sinking or neutrally buoyant line. Floating groundlines are prohibited;
2. All buoy lines must be made of either sinking or neutrally buoyant line, except the bottom portion of the line, which may be a section of floating line not to exceed one-third the overall length of the buoy line;
3. Fishermen are allowed to use two buoy lines per trawl; and
4. A weak link with a maximum breaking strength of 1,500 lb (680.4 kg) must be placed at all buoys.

Anchored Gillnet Gear

Fishermen utilizing anchored gillnet gear within the portion of the Other Northeast Gillnet Waters that overlap with the DAM zone are required to utilize all the following gear modifications while the DAM zone is in effect:

1. Groundlines must be made of either sinking or neutrally buoyant line. Floating groundlines are prohibited;
2. All buoy lines must be made of either sinking or neutrally buoyant line, except the bottom portion of the line,

which may be a section of floating line not to exceed one-third the overall length of the buoy line;

3. Fishermen are allowed to use two buoy lines per string;

4. Each net panel must have a total of five weak links with a maximum breaking strength of 1,100 lb (498.8 kg). Net panels are typically 50 fathoms (91.4 m) in length, but the weak link requirements would apply to all variations in panel size. These weak links must include three floatline weak links. The placement of the weak links on the floatline must be: one at the center of the net panel and one each as close as possible to each of the bridle ends of the net panel. The remaining two weak links must be placed in the center of each of the up and down lines at the panel ends; and

5. All anchored gillnets, regardless of the number of net panels, must be securely anchored with the holding power of at least a 22 lb (10.0 kg) Danforth-style anchor at each end of the net string.

The restrictions will be in effect beginning at 0001 hours January 15, 2005, through 2400 hours January 29, 2005, unless terminated sooner or extended by NMFS through another notification in the **Federal Register**.

The restrictions will be announced to state officials, fishermen, ALWTRT members, and other interested parties through e-mail, phone contact, NOAA website, and other appropriate media immediately upon filing with the **Federal Register**.

Classification

In accordance with section 118(f)(9) of the MMPA, the Assistant Administrator (AA) for Fisheries has determined that this action is necessary to implement a take reduction plan to protect North Atlantic right whales.

Environmental Assessments for the DAM program were prepared on December 28, 2001, and August 6, 2003. This action falls within the scope of the analyses of these EAs, which are available from the agency upon request.

NMFS provided prior notice and an opportunity for public comment on the regulations establishing the criteria and procedures for implementing a DAM zone. Providing prior notice and opportunity for comment on this action, pursuant to those regulations, would be impracticable because it would prevent NMFS from executing its functions to protect and reduce serious injury and mortality of endangered right whales. The regulations establishing the DAM program are designed to enable the agency to help protect unexpected concentrations of right whales. In order to meet the goals of the DAM program, the agency needs to be able to create a DAM zone and implement restrictions on fishing gear as soon as possible once the criteria are triggered and NMFS determines that a DAM restricted zone is appropriate. If NMFS were to provide prior notice and an opportunity for public comment upon the creation of a DAM restricted zone, the aggregated right whales would be vulnerable to entanglement which could result in serious injury and mortality. Additionally, the right whales would most likely move on to another location before NMFS could implement the restrictions designed to protect them, thereby rendering the action obsolete. Therefore, pursuant to 5 U.S.C. 553(b)(B), the AA finds that good cause exists to waive prior notice and an opportunity to comment on this action to implement a DAM restricted zone to reduce the risk of entanglement of endangered right whales in commercial lobster trap/pot and anchored gillnet gear as such procedures would be impracticable.

For the same reasons, the AA finds that, under 5 U.S.C. 553(d)(3), good cause exists to waive the 30–day delay in effective date. If NMFS were to delay for 30 days the effective date of this action, the aggregated right whales would be vulnerable to entanglement, which could cause serious injury and mortality. Additionally, right whales would likely move to another location between the time NMFS approved the action creating the DAM restricted zone and the time it went into effect, thereby rendering the action obsolete and ineffective. Nevertheless, NMFS recognizes the need for fishermen to have time to either modify or remove (if not in compliance with the required restrictions) their gear from a DAM zone once one is approved. Thus, NMFS makes this action effective 2 days after the date of publication of this notice in the **Federal Register**. NMFS will also endeavor to provide notice of this action to fishermen through other means as soon as the AA approves it, thereby providing approximately 3 additional days of notice while the Office of the **Federal Register** processes the document for publication.

NMFS determined that the regulations establishing the DAM program and actions such as this one taken pursuant to those regulations are consistent to the maximum extent practicable with the enforceable policies of the approved coastal management program of the U.S. Atlantic coastal states. This determination was submitted for review by the responsible state agencies under section 307 of the Coastal Zone Management Act. Following state review of the regulations creating the DAM program, no state disagreed with NMFS' conclusion that the DAM program is consistent to the maximum extent practicable with the enforceable policies of the approved coastal management program for that state.

The DAM program under which NMFS is taking this action contains policies with federalism implications warranting preparation of a federalism assessment under Executive Order 13132. Accordingly, in October 2001 and March 2003, the Assistant Secretary for Intergovernmental and Legislative Affairs, DOC, provided notice of the DAM program and its amendments to the appropriate elected officials in states to be affected by actions taken pursuant to the DAM program. Federalism issues raised by state officials were addressed in the final rules implementing the DAM program. A copy of the federalism Summary Impact Statement for the final rules is available upon request (**ADDRESSES**).

The rule implementing the DAM program has been determined to be not significant under Executive Order 12866.

Authority: 16 U.S.C. 1361 *et seq.* and 50 CFR 229.32(g)(3)

Dated: January 10, 2005.

Rebecca Lent,

Deputy Assistant Administrator for Regulatory Programs, National Marine Fisheries Service.

[FR Doc. 05–750 Filed 1–10–05; 4:36 pm]

BILLING CODE 3510–22–S

Proposed Rules

Federal Register
Vol. 70, No. 9
Thursday, January 13, 2005

This section of the FEDERAL REGISTER contains notices to the public of the proposed issuance of rules and regulations. The purpose of these notices is to give interested persons an opportunity to participate in the rule making prior to the adoption of the final rules.

DEPARTMENT OF TRANSPORTATION

Federal Aviation Administration

14 CFR Part 39

[Docket No. FAA–2004–19694; Directorate Identifier 2004–CE–41–AD]

RIN 2120–AA64

Airworthiness Directives; Cirrus Design Corporation Model SR20 and SR22 Airplanes

AGENCY: Federal Aviation Administration (FAA), DOT.

ACTION: Notice of proposed rulemaking (NPRM).

SUMMARY: The FAA proposes to adopt a new airworthiness directive (AD) for certain Cirrus Design Corporation (CDC) Model SR20 and SR22 airplanes. This proposed AD would require you to measure and adjust the crew seat break-over bolts and to replace the crew seat recline locks on both crew seats. This proposed AD results from CDC discovering that the crew seats, under emergency landing dynamic loads, may fold forward at less than 26 G required by the regulations. We are issuing this proposed AD to prevent the crew seats from folding forward during emergency landing with dynamic loads with consequent occupant injury.

DATES: We must receive any comments on this proposed AD by February 24, 2005.

ADDRESSES: Use one of the following to submit comments on this proposed AD:

- *DOT Docket Web site:* Go to *http://dms.dot.gov* and follow the instructions for sending your comments electronically.
- *Government-wide rulemaking Web site:* Go to *http://www.regulations.gov* and follow the instructions for sending your comments electronically.
- *Mail:* Docket Management Facility; U.S. Department of Transportation, 400 Seventh Street, SW., Nassif Building, Room PL–401, Washington, DC 20590–001.
- *Fax:* 1–202–493–2251.
- *Hand Delivery:* Room PL–401 on the plaza level of the Nassif Building, 400 Seventh Street, SW., Washington, DC, between 9 a.m. and 5 p.m., Monday through Friday, except Federal holidays.

To get the service information identified in this proposed AD, contact Cirrus Design Corporation, 4515 Taylor Circle, Duluth, Minnesota 55811; telephone: (218) 727–2737.

To view the comments to this proposed AD, go to *http://dms.dot.gov.* The docket number is FAA–2004–19694.

FOR FURTHER INFORMATION CONTACT: Angie Kostopoulos, Aerospace Engineer, ACE–116C, Chicago Aircraft Certification Office, 2300 East Devon Avenue, Room 107, Des Plaines, Illinois 60018; telephone: (847) 294–7426; facsimile: (847) 294–7834.

SUPPLEMENTARY INFORMATION:

Comments Invited

How do I comment on this proposed AD? We invite you to submit any written relevant data, views, or arguments regarding this proposal. Send your comments to an address listed under **ADDRESSES.** Include the docket number, ''FAA–2004–19694; Directorate Identifier 2004–CE–41–AD'' at the beginning of your comments. We will post all comments we receive, without change, to *http://dms.dot.gov*, including any personal information you provide. We will also post a report summarizing each substantive verbal contact with FAA personnel concerning this proposed rulemaking. Using the search function of our docket web site, anyone can find and read the comments received into any of our dockets, including the name of the individual who sent the comment (or signed the comment on behalf of an association, business, labor union, etc.). This is docket number FAA–2004–19694. You may review the DOT's complete Privacy Act Statement in the **Federal Register** published on April 11, 2000 (65 FR 19477–78) or you may visit *http://dms.dot.gov.*

Are there any specific portions of this proposed AD I should pay attention to? We specifically invite comments on the overall regulatory, economic, environmental, and energy aspects of this proposed AD. If you contact us through a nonwritten communication and that contact relates to a substantive part of this proposed AD, we will summarize the contact and place the summary in the docket. We will consider all comments received by the closing date and may amend this proposed AD in light of those comments and contacts.

Docket Information

Where can I go to view the docket information? You may view the AD docket that contains the proposal, any comments received, and any final disposition in person at the DMS Docket Offices between 9:00 a.m. and 5:00 p.m. (eastern standard time), Monday through Friday, except Federal holidays. The Docket Office (telephone 1–800–647–5227) is located on the plaza level of the Department of Transportation NASSIF Building at the street address stated in **ADDRESSES.** You may also view the AD docket on the Internet at *http://dms.dot.gov*. The comments will be available in the AD docket shortly after the DMS receives them.

Discussion

What events have caused this proposed AD? The Cirrus Design Corporation (CDC) performed dynamic seat testing on Models SR20 and SR22 airplanes. CDC found that, under emergency landing dynamic loads, the crew seats may fold forward at less than the 26 Gs required by 14 CFR Section 23.562 (b) (2).

What is the potential impact if FAA took no action? If not prevented, the crew seats folding forward during emergency landing with dynamic loads could result in occupant injury.

Is there service information that applies to this subject? Cirrus Design Corporation has issued Service Bulletin SB 2X–25–06 R2, dated December 6, 2004, and Service Bulletin SB A2X–25–08, dated June 22, 2004.

What are the provisions of this service information? The service bulletins include procedures for:

—Inspecting crew seat break-over bolts;
—Adjusting the crew seat break-over bolts;
—Checking recline lock identification;
—Performing recline lock replacement; and
—Checking break-over pin alignment.

FAA's Determination and Requirements of This Proposed AD

What has FAA decided? We have evaluated all pertinent information and

identified an unsafe condition that is likely to exist or develop on other products of this same type design. For this reason, we are proposing AD action.

What would this proposed AD require? This proposed AD would require you to incorporate the actions in the previously-referenced service bulletins.

How does the revision to 14 CFR part 39 affect this proposed AD? On July 10, 2002, we published a new version of 14 CFR part 39 (67 FR 47997, July 22, 2002), which governs FAA's AD system. This regulation now includes material that relates to altered products, special flight permits, and alternative methods of compliance. This material previously was included in each individual AD. Since this material is included in 14 CFR part 39, we will not include it in future AD actions.

Costs of Compliance

How many airplanes would this proposed AD impact? We estimate that this proposed AD affects 1,501 airplanes in the U.S. registry.

What would be the cost impact of this proposed AD on owners/operators of the affected airplanes? CDC will provide warranty credit for service bulletins SB A2X–25–08, dated June 22, 2004, and SB 2X–25–06 R2, dated December 6, 2004.

Authority for This Rulemaking

What authority does FAA have for issuing this rulemaking action? Title 49 of the United States Code specifies the FAA's authority to issue rules on aviation safety. Subtitle I, section 106 describes the authority of the FAA Administrator. Subtitle VII, Aviation Programs, describes in more detail the scope of the agency's authority.

We are issuing this rulemaking under the authority described in subtitle VII, part A, subpart III, section 44701, ''General requirements.'' Under that section, Congress charges the FAA with promoting safe flight of civil aircraft in air commerce by prescribing regulations for practices, methods, and procedures the Administrator finds necessary for safety in air commerce. This regulation is within the scope of that authority because it addresses an unsafe condition that is likely to exist or develop on products identified in this AD.

Regulatory Findings

Would this proposed AD impact various entities? We have determined that this proposed AD would not have federalism implications under Executive Order 13132. This proposed AD would not have a substantial direct effect on the States, on the relationship between the national Government and the States, or on the distribution of power and responsibilities among the various levels of government.

Would this proposed AD involve a significant rule or regulatory action? For the reasons discussed above, I certify that this proposed AD:

1. Is not a ''significant regulatory action'' under Executive Order 12866;
2. Is not a ''significant rule'' under the DOT Regulatory Policies and Procedures (44 FR 11034, February 26, 1979); and
3. Will not have a significant economic impact, positive or negative, on a substantial number of small entities under the criteria of the Regulatory Flexibility Act.

We prepared a summary of the costs to comply with this proposed AD and placed it in the AD Docket. You may get a copy of this summary by sending a request to us at the address listed under **ADDRESSES.** Include ''AD Docket FAA–2004–19694; Directorate Identifier 2004–CE–41–AD'' in your request.

List of Subjects in 14 CFR Part 39

Air transportation, Aircraft, Aviation safety, Safety.

The Proposed Amendment

Accordingly, under the authority delegated to me by the Administrator, the Federal Aviation Administration proposes to amend 14 CFR part 39 as follows:

PART 39—AIRWORTHINESS DIRECTIVES

1. The authority citation for part 39 continues to read as follows:

Authority: 49 U.S.C. 106(g), 40113, 44701.

§ 39.13 [Amended]

2. The FAA amends § 39.13 by adding the following new airworthiness directive (AD):

Cirrus Design Corporation: Docket No. FAA–2004–19694; Directorate Identifier 2004–CE–41–AD

When Is the Last Date I Can Submit Comments on This Proposed AD?

(a) We must receive comments on this proposed airworthiness directive (AD) by February 24, 2005.

What Other ADs Are Affected by This Action?

(b) None.

What Airplanes Are Affected by This AD?

(c) This AD affects the following airplane models and serial numbers that are certificated in any category:

Model	Serial Nos.
(1) SR20	1005 through 1439.
(2) SR22	0002 through 1044.

What Is the Unsafe Condition Presented in This AD?

(d) This AD is the result of discovering that the crew seats, under emergency landing dynamic loads, may fold forward at less than 26 G required by the regulations, 14 Code of Federal Regulations (CFR) Section 23.562 (b)(2). The actions specified in this AD are intended to prevent the crew seats from folding forward during emergency landing with dynamic loads with consequent occupant injury.

What Must I Do To Address This Problem?

(e) To address this problem, you must do the following:

Actions	Compliance	Procedures
(1) For models SR20, serial numbers 1005 through 1423, and SR22, serial numbers 0002 through 0972, do the following actions:.	Within 50 hours time-in-service (TIS) or within 180 days, whichever occurs first after the effective date this AD.	Follow Cirrus Design Corporation Service Bulletin SB A2X–25–08, dated June 22, 2004.
(i) Move the lower portion of the crew seat upholstery upward to expose of the seat frame and locking mechanism. Measure the clearance between the break-over bolt and the seat frame for a clearance that meets the requirements in the service bulletin.		
(ii) If the clearance does not meet that specified in the service bulletin, perform the crew seat break-over bolt adjustment and re-cover the crew seat frame and locking mechanism with the upholstery.		

Actions	Compliance	Procedures
(iii) If the clearance does meet that specified in the service bulletin, re-cover the crew seat frame and locking mechanism.		
(2) For models SR20, serial numbers 1005 through 1439, and SR22, serial numbers 0002 through 1044, do the following actions:.	Within 50 hours TIS or within 180 days, whichever occurs first after the effective date of this AD.	Follow Cirrus Design Corporation Service Bulletin SB 2X–25–06 R2, dated December 6, 2004.
(i) Identify whether the recline lock is secured with two bolts or three bolts.		
(ii) If the recline locks are secured effective 6, 2004. with two bolts, remove the existing recline date of this locks and replace with the new recline locks AD. kit, kit number 70084–001.		
(iii) If the recline locks are secured with three bolts, remove existing recline locks and replace with the new recline locks kit, kit number 70084–002.		
(iv) Check break-over pin alignment and adjust as necessary.		
(v) Repeat the above actions for the opposite crew seat.		

May I Request an Alternative Method of Compliance?

(f) You may request a different method of compliance or a different compliance time for this AD by following the procedures in 14 CFR 39.19. Unless FAA authorizes otherwise, send your request to your principal inspector. The principal inspector may add comments and will send your request to the Manager, Chicago Aircraft Certification Office, FAA. For information on any already approved alternative methods of compliance, contact Angie Kostopoulos, Aerospace Engineer, ACE–116C, Chicago Aircraft Certification Office, 2300 East Devon Avenue, Room 107, Des Plaines, Illinois 60018; telephone: (847) 294–7426; facsimile: (847) 294–7834.

May I Get Copies of the Documents Referenced in This AD?

(g) To get copies of the documents referenced in this AD, contact Cirrus Design Corporation, 4515 Taylor Circle, Duluth, Minnesota 55811; telephone: (218) 727–2737. To view the AD docket, go to the Docket Management Facility; U.S. Department of Transportation, 400 Seventh Street, SW., Nassif Building, Room PL–401, Washington, DC, or on the Internet at *http://dms.dot.gov.* The docket number is FAA–2004–19694.

Issued in Kansas City, Missouri, on January 7, 2005.

James E. Jackson,

Acting Manager, Small Airplane Directorate, Aircraft Certification Service.

[FR Doc. 05–717 Filed 1–12–05; 8:45 am]

BILLING CODE 4910–13–P

DEPARTMENT OF TRANSPORTATION

Office of the Secretary

14 CFR Part 257

[OST Docket No. 2004–19083]

RIN 2105–AD49

Disclosure of Code Sharing and Long-Term Wet Lease Arrangements

AGENCY: Department of Transportation; Office of the Secretary.

ACTION: Notice of proposed rulemaking (NPRM).

SUMMARY: The Department of Transportation (Department or DOT) is proposing to amend its rule governing the disclosure of code-share and long-term wet lease arrangements in print advertisements of scheduled passenger services to permit carriers to disclose generically that some of the advertised service may involve travel on another carrier, so long as they also identify a list of all potential carriers involved in serving the markets being advertised. This proposed action is being taken in response to a petition for rulemaking filed by United Airlines, Inc.

DATES: Comments must be received on or before March 14, 2005. The Department will consider late-filed comments only to the extent practicable.

ADDRESSES: You may submit comments identified by DOT DMS Docket Number 2004–19083 by any of the following methods: Web Site: *http://dms.dot.gov.* Follow the instructions for submitting comments on the DOT electronic docket site.

Fax: 1–202–493–2251.

Mail: Docket Management Facility; U.S. Department of Transportation, 400 Seventh Street, SW., Nassif Building, Room PL–401, Washington, DC 20590–001. Hand Delivery: Room PL–401 on the plaza level of the Nassif Building, 400 Seventh Street, SW., Washington, DC, between 9 a.m. and 5 p.m., Monday through Friday, except Federal holidays.

Federal eRulemaking Portal: Go to *http://www.regulations.gov.* Follow the online instructions for submitting comments.

Instructions: All submissions must include the agency name and docket number or Regulatory Identification Number (RIN) for this rulemaking. For detailed instructions on submitting comments and additional information on the rulemaking process, see the Public Participation heading of the Supplementary Information section of this document. Note that all comments received will be posted without change to *http://dms.dot.gov* including any personal information provided. Please see the Privacy Act heading under Regulatory Notices.

Docket: For access to the docket to read background documents or comments received, go to *http://dms.dot.gov* at any time or to Room PL–401 on the plaza level of the Nassif Building, 400 Seventh Street, SW., Washington, DC, between 9 a.m. and 5 p.m., Monday through Friday, except Federal holidays.

FOR FURTHER INFORMATION CONTACT: Trace Atkinson or Blane Workie, Office of the Assistant General Counsel for Aviation Enforcement and Proceedings, Office of the General Counsel, U.S. Department of Transportation, 400 7th Street SW., Room 4116, Washington, DC 20590, (202) 366–9342 (Voice) or (202) 366–7152 (Fax).

SUPPLEMENTARY INFORMATION:

Background

The Secretary of Transportation has the authority to define unfair or deceptive practices or unfair methods of competition. 49 U.S.C. 41712. Since 1985, it has been the Department's stated policy to view the failure of U.S. carriers to provide reasonable and timely notice to consumers of the existence of a code-share arrangement as an unfair and deceptive practice. 50 FR 38508. The Department further strengthened its consumer notification rules and policies to ensure that consumers would have pertinent information about airline code-sharing arrangements and long-term wet leases in domestic and international air transportation through the adoption of 14 CFR part 257 on March 15, 1999. 64 FR 12838. Section 257.5(d) of that part requires carriers in any print advertisement for service in a city-pair market that is provided under a code-sharing arrangement or long-term wet lease to clearly indicate the nature of the service in reasonably sized type and identify the transporting carrier[s] by corporate name and by any other name under which the service is held out to the public.

Petition for Rulemaking

United Airlines, Inc., (United) filed a petition for rulemaking with the Department on September 7, 2004, asking that we amend 14 CFR 257.5(d). United asserts that the current print advertisement disclosures have become increasingly burdensome on network carriers while failing to provide meaningful off-setting consumer benefits. United points out that a network carrier typically publishes print advertisements offering service for travel in multiple domestic and international city pairs over a large number of alternative routings, some of which would be provided by carriers other than the advertising carrier pursuant to a code-share or a wet lease arrangement. Presently, in order to comply with section 257.5(d), such a carrier must provide consumers with a detailed set of disclosures that will vary depending on the number of alternative routings that may be available for travel in a specific city-pair. This results in print advertisements that include numerous footnotes relating exclusively to the disclosure of code-share and wet lease arrangements. According to United, not only do such disclosures impose a significant burden on carriers, but these disclosures may also serve to increase consumer confusion and, at best, provide only limited information to consumers about the carrier that would be operating a particular flight the consumer desires.

To ease the burden on carriers, United requests that section 257.5(d) be reinterpreted to permit carriers to provide a generic disclosure in print advertisements indicating that some of the service offered may involve travel on one or more of its listed partner carriers. United contends that if its proposal is adopted, the information consumers obtain in practical terms would not change and the burden on carriers would be eliminated. United emphasizes that print advertisements serve only as the first opportunity to inform consumers about an airline's service offerings and consumers will continue to receive more detailed disclosures about any code-sharing arrangement that may be relevant to their travel plans before making any travel purchase decisions through telephone inquiries to reservation offices or by reviewing Internet flight listings.

Comments on the Petition

Four carriers, an airline association and, Orbitz, LLC (Orbitz) submitted comments on United's petition for rulemaking. The Air Carrier Association of America (ACAA) and Southwest Airlines (Southwest) filed comments opposing the petition while American Airlines, Inc. (American), Delta Air Lines, Inc. (Delta), US Airways, Inc. (US Airways), and Orbitz filed comments in support of the petition.

In addition to supporting United's petition, two carriers and Orbitz seek additional relief. American asks that United's requested change to DOT's rule governing the disclosure of code-share and long-term wet lease arrangements in print advertisements also apply to Internet advertisements. US Airways requests that the Department act expeditiously on United's petition by limiting the comment period for this NPRM to 30 days and/or moving directly to issue an interim final rule on this matter. Orbitz urges that any amended rule apply not just to carriers, but explicitly to travel agents as well; however, it also cautions against a common standard applicable to both print and Internet advertising for all of the Department's rules. Orbitz contends that rules designed specifically for the static print medium may artificially restrain the ability of electronic advertisers to provide complete fare information to consumers in a dynamic, intuitive, and interactive way.

A. Print Advertisements

Commenters supporting an amendment to DOT's rule governing the disclosure of code-share and long-term wet lease arrangements in print advertisements agree with United that the current disclosure requirements may actually serve to confuse customers rather than inform them that advertised services may involve travel on code-share partners. According to Delta, without knowing a customer's specific itinerary, it is impossible to determine whether transportation will be provided by the advertising carrier or by one or more code-share partners. Delta, like United, asserts that once enough details are known about a customer's actual travel plans, carriers can and do provide accurate and detailed disclosure information about any actual code-sharing involving particular flights. All four carriers that filed in support of United's petition also argue that the increased burden of the current code-share disclosure rule on carriers that rely extensively on code-sharing to serve their customers adds significant costs without providing corresponding benefits to consumers. Orbitz agrees that the current rule is onerous and fails to offer off-setting consumer benefits and protections. United further contends that those opposing its petition are interested not in protecting consumers, but in preventing the Department from reducing the regulatory burden on such network carriers. In addition, US Airways argues that an unintended consequence of the current rule is to create incentives for carriers not to advertise in smaller markets because of the high cost of compliance with the rule as now written.

On the other hand, Southwest and ACAA argue that the Department should not amend its rule governing the disclosure of code-share and long-term wet lease arrangements in print advertisements because, they assert, there is no empirical evidence to show that the Department's reasons for requiring route-specific disclosure requirements are any less valid today than they were when they were first adopted. They note that the very carriers who initially argued for the rule requiring the disclosure of code-share and wet-lease arrangements are now seeking a change in the rule because they have increased their own code-share relationships. ACAA appears to be concerned that the adoption of United's proposal would result in advertisements that would increase the market dominance of large carriers. ACAA explains that customers seeing such an ad, even if told later that the flight will be operated by a code-share partner, will remember the ad and focus on the largest carrier in a particular city-pair

market which will in turn allow a larger carrier to increase its market dominance. ACAA requests that the Department undertake a thorough review of the impact of code-sharing on consumers and competition before considering United's petition, while Southwest argues that rather than weakening the current rule respecting disclosure of code-share and long-term wet leases in print advertisements, the current requirements should be strengthened, as violations of the current rule persist despite the fact that these requirements have been in place for several years.

ACAA and Southwest also assert that the market-specific disclosure currently required provides consumers with valuable information concerning who will actually provide the air transportation on the specific flights the passenger is considering. They stress that this policy correctly recognizes that consumers are best served when they are given relevant information about travel choices at the beginning of their decision-making process rather than at the end of it when they have already narrowed their choices. Accordingly, they argue that it would be contrary to the public interest for carriers to suggest that they offer multiple flights in a particular market when in actuality, many of the flights advertised are operated by code-share partners. ACAA contends that under United's proposal, members of the public would have no way of knowing which flights are operated under code-share arrangements and which carriers operate those flights. In addition, in support of its argument against United's proposal, Southwest cites the Department's earlier findings that a general disclosure does not suffice to properly inform consumers about the particular flights they are considering for travel and that a failure to disclose such a relationship is deceptive and can result in confusion, hardship, and inconvenience to consumers.

B. Internet Advertisements

In asking that we change our rule governing the disclosure of code-share and long-term wet lease arrangements not only with regard to print advertisements, but with respect to Internet advertisements, as well, American argues that the same difficulties in constructing print advertisements that United identifies in its petition also arise with respect to Internet advertising. American also asserts that there is longstanding DOT policy that Internet listings provide code-share disclosures in a manner required of print media fare ads. US Airways joins American in asking that the code-share disclosure rule change requested by United be extended to Internet advertisements. Orbitz agrees with American that the Department should amend 14 CFR 257.5(d) to explicitly state that the amended rule applies to both print and Internet advertising. Orbitz claims that for online ticket agents, the problems posed by the current rule are more acute in that a single Web page may advertise multiple city-pairs operated under code-share or wet-lease arrangements by different carriers.

C. Expedited Review of Petition

In support of its request for expedited review of United's petition, US Airways claims that code-sharing is not a novel practice, but is well understood by airline passengers, and that the Department is capable of determining whether consumers require extended verbiage in the code-sharing notification. Secondly, US Airways states the Department should act expeditiously because code-share advertising has become more burdensome as the industry has evolved, particularly for carriers like US Airways that have multiple code-sharing partners. No other comment was received on this point.

Agency Review of Petition

As noted above, the Department has a long history of requiring code-share and wet lease disclosures in print advertisements. Many of the reasons for requiring such disclosures were discussed in the notice of proposed rulemaking dated August 10, 1994, and the final rule dated March 15, 1999. 59 FR 40836 and 64 FR 12838, respectively. However, since that time, there have been many changes in the marketplace, including an increase in the number of carriers providing service in multiple domestic and international city-pair markets over a large number of alternative routings, many of which are provided by carriers other than the advertising carrier pursuant to a code-share or a wet lease arrangement. The unintended practical effect of current section 257.5(d) is that carriers that rely extensively on code-sharing to serve customers must now include numerous footnotes relating exclusively to the disclosure of code-share and wet lease arrangements in print advertisements.

We are tentatively of the opinion that the benefits of the additional specific notice provided consumers in a print advertisement under the present rule may not outweigh the detriment to carriers and the public of continuing to require such detail. We not only agree that these footnotes are burdensome for carriers, but we also see merit in the argument that the many separate footnotes now required where multiple markets are contained in a single advertisement may also confuse customers rather than inform them of advertised services. Therefore, while we will continue to consider a failure to disclose code-share and wet lease arrangements in print advertisements to be an unfair and deceptive trade practice and to vigorously enforce any such violations, we are tentatively of the opinion that continuing to require that carriers identify each specific partner carrier that serves each particular city-pair route or market being advertised is not necessary for consumers adequately to be informed of the advertised service. Accordingly, we are proposing to grant United's petition for rulemaking and amend our rule governing code-share and long-term wet lease disclosure in print advertisements to permit a generic statement indicating that some of the advertised service may involve travel on another carrier, so long as such advertisements also include a list of all potential code-share or wet lease carriers involved in serving the markets being advertised. We specifically request comments from the public, particularly air travel consumers, as to the benefits, if any, of the market-specific disclosures currently required in print advertisements and whether any such benefits outweigh the burdens on carriers and the potential confusion for consumers from including such additional information in print advertisements.

The Department further believes that it is important, as has been suggested by ACAA, that the current rule not be amended without careful consideration and full opportunity for comment, but we are aware of no reason why other aspects of the code-share rule need to be reviewed at this time, as ACAA would have us do. Therefore, we will limit our review of the rule to the issue raised by United, and not grant US Airway's request for expedited review but will instead provide for a full 60-day comment period on this NPRM. All interested parties are encouraged to comment.

With regard to American's request to change DOT's rule governing the disclosure of code-share and long-term wet lease arrangements in Internet advertisements, the Department is not persuaded that the same burdens and potential consumer confusion that may exist in constructing and reading print advertisements that United and other commenters assert exist also arise with respect to Internet advertising. With regard to Internet advertisements, it

appears to us that entities soliciting air transportation via the Internet can easily and clearly disclose information to consumers regarding each specific partner carrier that serves each particular city-pair route or market being advertised by using hyperlinks or other techniques. Accordingly, we have not proposed here to expand United's petition for a change in our code-share and wet lease disclosure rule to include Internet solicitations. However, we recognize that there may be cost burdens to carriers associated with market-specific disclosure of code-share and long-term wet lease arrangements through Internet advertising of which we are not aware and encourage all interested parties to comment. We are particularly interested in receiving comments on possible benefits or detriments of not expanding United's petition for a change in our code-share and wet lease disclosure rule to include Internet advertising as well as reasons for the Department to view Internet advertising differently or the same as print advertising.

Regulatory Analysis and Notices

Executive Order 12866 (Regulatory Planning and Review) and DOT Regulatory Policies and Procedures

The Department has determined that this proposal, if adopted as a final rule, would not be a significant regulatory action under Executive Order 12866 or under the Department's Regulatory Policies and Procedures. The proposed rule would require the disclosure of less information than is required by the current rule and the Department expects an adoption of the proposed rule to reduce the regulatory burden imposed by the current rule. Therefore, this rule is expected to have a minimal economic effect and further regulatory evaluation is not necessary.

Regulatory Flexibility Act

The Regulatory Flexibility Act (5 U.S.C. 601 *et seq.*) requires an agency to review regulations to assess their impact on small entities unless the agency determines that a rule is not expected to have a significant economic impact on a substantial number of small entities. The Department certifies that this proposed rule, if adopted, would not have a significant economic impact on a substantial number of small entities. The proposed rule would reduce the regulatory burden on network carriers that rely extensively on code-sharing to serve customers but does not impose any additional burdens on either small or large carriers. The Department seeks comment on whether there are small entity impacts that should be considered. If comments provide information that there are significant small entity impacts, the Department will prepare a regulatory flexibility analysis at the final rule stage.

Executive Order 13132 (Federalism)

This NPRM has been analyzed in accordance with the principles and criteria contained in Executive Order 13132. The Department has determined that this proposal would not have a substantial direct effect on the States, on the relationship between the National Government and the States, or on the distribution of power and responsibilities among the various levels of government, and therefore would not have federalism implications.

Executive Order 13084

This proposed rule has been analyzed in accordance with the principles and criteria contained in Executive Order 13084 (''Consultation and Coordination with Indian Tribal Governments''). Because this proposed rule, if adopted, would not significantly or uniquely affect the Indian tribal communities, and would not impose substantial direct compliance costs, the funding and consultation requirements of the Executive Order do not apply.

Unfunded Mandates Reform Act

Title II of the Unfunded Mandates Reform Act of 1995 (the Act), enacted as Public Law 104–4 on March 22, 1995, requires each Federal agency, to the extent permitted by law, to prepare a written assessment of the effects of any Federal mandate in a proposed or final agency rule that may result in the expenditure by State, local, and tribal governments, in the aggregate, or by the private sector, of $100 million or more (adjusted annually for inflation) in any one year. The proposed rule does not contain any Federal mandate that would result in such expenditures. Therefore, the requirements of title II of the Act do not apply.

Paperwork Reduction Act

The proposed rule does not contain information collection requirements that require approval by the Office of Management and Budget (OMB) under the Paperwork Reduction Act (44 U.S.C. 2507 *et seq.*). There is a current OMB control number assigned to this rulemaking, and the OMB number is 2105–0537.

List of Subjects in 14 CFR Part 257

Air carriers, Consumer protection, Foreign air carriers.

For the reasons set forth in the preamble, the Department of Transportation proposes to amend 14 CFR part 257 as follows:

CHAPTER II—OFFICE OF THE SECRETARY, DEPARTMENT OF TRANSPORTATION

PART 257—DISCLOSURE OF CODE-SHARING ARRANGEMENTS AND LONG-TERM WET LEASES

(1) The authority for 14 CFR part 257 would continue to read as follows:

Authority: 49 U.S.C. 40113(a) and 41712.

(2) Section 257.5(d) would be revised to read as follows:

§ 257.5 Notice requirement.

* * * * *

(d) In any printed advertisement published in or mailed to or from the United States for service in a city-pair market that is provided under a code-sharing arrangement or long-term wet lease, the advertisement shall prominently disclose that the advertised service may involve travel on another carrier and clearly indicate the nature of the service in reasonably sized type and shall identify all potential transporting carriers involved in the markets being advertised by corporate name and by any other name under which that service is held out to the public. In any radio or television advertisement broadcast in the United States for service in a city-pair market that is provided under a code-sharing or long-term wet lease, the advertisement shall include at least a generic disclosure statement, such as ''Some services are provided by other airlines.''

Issued this 5th Day of January, 2005, at Washington, DC, pursuant to 49 CFR 1.56a.

Karan K. Bhatia,

Assistant Secretary for Aviation and International Affairs.

[FR Doc. 05–737 Filed 1–12–05; 8:45 am]

BILLING CODE 4910–62–P

Notices

Federal Register

Vol. 70, No. 9

Thursday, January 13, 2005

This section of the FEDERAL REGISTER contains documents other than rules or proposed rules that are applicable to the public. Notices of hearings and investigations, committee meetings, agency decisions and rulings, delegations of authority, filing of petitions and applications and agency statements of organization and functions are examples of documents appearing in this section.

DEPARTMENT OF AGRICULTURE

National Sheep Industry Improvement Center; Solicitation of Nominations of Board Members

AGENCY: National Sheep Industry Improvement Center.

ACTION: Notice: Invitation to submit nominations.

SUMMARY: The National Sheep Industry Improvement Center announces that it is accepting nominations for the Board of Directors of the National Sheep Industry Improvement Center for two voting directors' positions whose terms expire on February 14, 2005. Both positions are for members who are active producers of sheep or goats. Board members manage and oversee the Center's activities. Nominations may only be submitted by National organizations that consist primarily of active sheep or goat producers in the United States and who have as their primary interest the production of sheep or goats in the United States. Nominating organizations should submit: (1) Substantiation that the nominating organization is national in scope; (2) The number and percent of members that are active sheep or goat producers; (3) Substantiation of the primary interests of the organization, and (4) An Advisory Committee Membership Background Information form (Form AD–755) for each nominee.

This action is taken in accordance with 7 U.S.C. 2008j(f) which establishes the powers and composition of the Board of Directors for the National Sheep Industry Improvement Center.

DATES: Completed nominations must be received no later than February 28, 2005. Nominations received after that date will not be considered.

ADDRESSES: Submit nominations and statements of qualifications to Jay B. Wilson, Executive Director/CEO, National Sheep Industry Improvement Center, USDA, PO Box 23483, Washington, DC 20026–3483 if using the U.S. Postal Service; or Room 2117, South Agriculture Building, 1400 Independence Avenue, SW., Washington, DC 20250 if using other carriers.

FOR FURTHER INFORMATION CONTACT: Jay B. Wilson, Executive Director/CEO, National Sheep Industry Improvement Center, USDA, PO Box 23483, Washington, DC 20026–3483 if using the U.S. Postal Service; or Room 2117, South Agriculture Building, 1400 Independence Avenue, SW., Washington, DC 20250 if using other carriers. Telephone (202) 690–0632, (This is not a toll free number.) FAX 202–720–1053. Forms and other information can be found at *http://www.nsiic.org.*

SUPPLEMENTARY INFORMATION: The National Sheep Industry Improvement Center (NSIIC), or Sheep Center (Center), is authorized under 7 U.S.C. 2008j. The Center shall: (1) Promote strategic development activities and collaborative efforts by private and State entities to maximize the impact of Federal assistance to strengthen and enhance production and marketing of sheep or goat products in the United States; (2) optimize the use of available human capital and resources within the sheep or goat industries; (3) provide assistance to meet the needs of the sheep or goat industry for infrastructure development, business development, production, resource development, and market and environmental research; (4) advance activities that empower and build the capacity of the United States sheep or goat industry to design unique responses to special needs of the sheep or goat industries on both a regional and national basis; and (5) adopt flexible and innovative approaches to solving the long-term needs of the United States sheep or goat industry.

The management of NSIIC is vested in a Board of Directors that is appointed by, and reports to the Secretary of Agriculture. The Board of Directors is composed of seven voting members of whom four are active producers of sheep or goats in the United States, two have expertise in finance and management, and one has expertise in lamb, wool, goat or goat product marketing. Of the two open positions, both are for active producers of sheep or goats. The Board also includes two non-voting members, the Under Secretary of Agriculture for Rural Development and the Under Secretary of Agriculture for Research, Education, and Economics. The Executive Director serves as the CEO.

The Secretary of Agriculture shall appoint the voting members from the submitted nominations. Member's term of office shall be three years. Voting members are limited to two terms. The two positions for which nominees are sought are currently held by one member who is completing a first term and is eligible for reappointment and one member who is serving a second term and is therefore not eligible to be re-nominated.

The Board shall meet not less than once each fiscal year, but is likely to meet at least quarterly. Board members will not receive compensation for serving on the Board of Directors, but shall be reimbursed for travel, subsistence, and other necessary expenses.

The statement of qualifications of the individual nominees is being obtained by using Form AD–755, ''Advisory Committee Membership Background Information'' which can be accessed at *http://www.nsiic.org.* The requirements of this form are incorporated under OMB number 0570–0048.

Dated: December 14, 2004.

Jay B. Wilson,

Executive Director/CEO, National Sheep Industry Improvement Center.

[FR Doc. 05–685 Filed 1–12–05; 8:45 am]

BILLING CODE 1351–01–P

DEPARTMENT OF AGRICULTURE

Commodity Credit Corporation

Notice of Funds Availability: Inviting Applications for Emerging Markets Program

Announcement Type: New.

Catalog of Federal Domestic Assistance (CFDA) Number: 10.603.

SUMMARY: The Commodity Credit Corporation (CCC) announces the availability of approximately $8 million in funding for the Emerging Markets Program (EMP) for fiscal year (FY) 2005. The intended effect of this notice is to solicit applications from the private sector and from government agencies for FY 2005 and awards funds in early July 2005. The EMP is administered by

personnel of the Foreign Agricultural Service (FAS).

DATES: All proposals must be received by 5 p.m. eastern standard time, March 14, 2005. Applications received after this time will not be considered.

FOR FURTHER INFORMATION CONTACT: Entities wishing to apply for funding assistance should contact the Marketing Operations Staff, Foreign Agricultural Service, U.S. Department of Agriculture, Room 4932 South, STOP 1042, 1400 Independence Ave., SW., Washington, DC 20250–1042, phone: (202) 720–4327, fax: (202) 720–9361, e-mail: *emo@fas.usda.gov.* Information is also available on the Foreign Agricultural Service Web site at *http://www.fas.usda.gov/mos/em-markets/em-markets/html.*

SUPPLEMENTARY INFORMATION:

I. Funding Opportunity Description

Authority: The EMP is authorized by section 1542(d)(1)(D) of the Food, Agriculture, Conservation and Trade Act of 1990 (The Act), as amended. EMP regulations appear at 7 CFR part 1486.

1. *Purpose:* The EMP provides funding for technical assistance to assist U.S. organizations, public and private, to improve market access through generic, rather than branded, activities that can develop and promote U.S. agricultural products and/or processes in low- to middle-income countries that offer promise of emerging market opportunities.

Activities funded are those that primarily benefit U.S. industry as a whole. All agricultural products, except tobacco, are eligible for consideration. Proposals which include multiple commodities are also eligible. Only technical assistance activities are eligible for reimbursement.

2. *Appropriate Activities:* Following are types of project activities that may be funded:

—Projects designed specifically to improve market access in emerging foreign markets. Examples: Activities intended to mitigate the impact of sudden political events or economic and currency crisis in order to maintain U.S. market share; responses to time-sensitive market opportunities;

—Marketing and distribution of value-added products, including new products or uses. Examples: Food service development; market research on potential for consumer ready foods or new uses of a product;

—Studies of food distribution channels in emerging markets, including infrastructural impediments to U.S. exports; such studies should be specific in their focus and may include cross-commodity activities which address specific problems. Examples: Grain storage handling and inventory systems development; distribution infrastructure development;

—Projects that specifically address various constraints to U.S. exports, including sanitary and phytosanitary issues and other non-tarrif barriers. Examples: Seminars on U.S. food safety standards and regulations; assessing pest and disease problems that inhibit U.S. exports;

—Assessments and follow up activities designed to improve country-wide food and business systems, to reduce trade barriers, to increase prospects for U.S. trade and investment in emerging markets, and to determine the potential use for general export credit guarantees for commodities and services. Examples: Product needs assessments and market analysis; assessments to address infrastructural impediments;

—Projects that help foreign governments collect and use market information and develop free trade policies that benefit American exporters as well as the target country or countries. Examples: Agricultural statistical analysis; development of market information systems; policy analysis; and

—Short-term training in broad aspects of agriculture and agribusiness trade that will benefit U.S. exporters, including seminars and training at trade shows designed to expand the potential for U.S. agricultural exports by focusing on the trading system. Examples: Retail training; marketing seminars; transportation seminars; training on opening new or expanding existing markets.

The program funds technical assistance activities on a project-by-project basis. EMP funds may not be used to support normal operating costs of individual organizations, nor as a source by which to recover pre-award costs or prior expenses from previous or ongoing projects.

Ineligible activities include restaurant promotions; branded product promotions (including labeling and supplementing normal company sales activities intended to increase awareness and stimulate sales of branded products); advertising; administrative and operational expenses for trade shows; and the preparation and printing of brochures, flyers, posters, etc., except in connection with specific technical assistance activities such as training seminars. Other items excluded from funding are contained in the EMP Regulations.

3. *Eligible Markets:* The Act defines an emerging market as any country that the Secretary of Agriculture determines:

(a) Is taking steps toward a market-oriented economy through the food, agriculture, or rural business sectors of the economy of the country; and

(b) Has the potential to provide a viable and significant market for United States agricultural commodities or products of United States agricultural commodities.

Because funds are limited and the range of potential emerging market countries is worldwide, proposals for technical assistance activities will be considered which target those countries or regional groups with per capita income less than $9,076 (the current ceiling on upper middle income economies as determined by the World Bank [World Development Indicators]) and populations of greater than 1 million.

Income limits and their calculation can change from year to year, with the result that a given country may qualify under the legislative and administrative criteria one year but not the next. Therefore, CCC has not established a fixed list of ''emerging market'' countries. For FY 2005, however, the following guidance is provided regarding country eligibility for the EMP:

—Eligible. All of the countries of Central and South America; most in the Caribbean; all of sub-Saharan Africa; some countries in the Middle East; and the developing economies of Asia.

—Ineligible. Canada; Japan; Taiwan; Hong Kong; South Korea; Australia; New Zealand; all countries of Western Europe; Slovenia; Israel; Barbados, Aruba, and Antigua and Barbuda in the Caribbean; and Saudi Arabia, the United Arab Emirates, Dubai, Abu Dhabi, and Qatar in the Middle East.

Some markets can be more difficult to develop and sustain over a period of time; proposed activities in such markets should be considered in terms of whether they provide ''viable and significant markets'' for U.S. agricultural exports.

In the case of some oil-rich countries in the Middle East, *e.g.,* Saudi Arabia, targeted activities may be considered on a case-by-case basis, for example, addressing technical barriers to exporting U.S. commodities.

A few countries technically qualify as emerging markets, but because of political sensitivities may require a separate determination before funding can be considered.

II. Award Information

In general, all qualified proposals received before the application deadline will compete for EMP funding. Priority consideration will be given to proposals that identify and seek to address specific problems or constraints to agricultural exports in emerging markets through technical assistance activities that are intended to expand or maintain U.S. agricultural exports. Priority will also be given to those proposals that include the willingness of the applicant to commit its own funds, or those of the U.S. industry, to seek export opportunities in an emerging market. The percentage of private funding proposed for a project will, therefore, be a critical factor in determining which proposals are funded under the EMP. Proposals will also be judged on their ability to provide benefits to the organization receiving EMP funds and to the broader industry which that organization represents.

The limited funds and the range of emerging markets worldwide in which the funds may be used preclude CCC from approving large budgets for individual projects. While there is no minimum or maximum amount set for EMP-funded projects, most are funded at a level of less than $250,000 and for a duration of one year or less. Multi-year proposals, and at higher cost, may be considered in the context of a strategic detailed plan of implementation. Funding in such cases is normally provided one year at a time, with commitments beyond the first year subject to interim evaluations.

Funding for successful proposals will be provided through specific agreements. The CCC, through FAS, will be kept informed of the implementation of approved projects through the requirement to provide quarterly progress reports and final performance reports. Changes in the original project time lines and adjustments within project budgets beyond a certain amount must be approved by FAS.

III. Eligibility and Qualification Information

1. *Eligible Applicants.* Any United States private or Government entity with a demonstrated role or interest in exports of U.S. agricultural commodities or products may apply to the program. Government organizations consist of Federal, State, and local agencies. Private organizations include non-profit trade associations, universities, agricultural cooperatives, state regional trade groups, and profit-making entities and consulting businesses. Proposals from research and consulting organizations will be considered if they provide evidence of substantial participation in and financial support by the U.S. industry. For-profit entities are also eligible, but may not use program funds to conduct private business, promote private self-interests, supplement the costs of normal sales activities, or promote their own products or services beyond specific uses approved by CCC in a given project.

U.S. market development cooperators and state regional trade groups (SRTGs) may seek funding to address priority, market specific issues and to undertake activities not suitable for funding under other marketing programs, *e.g.,* the Foreign Market Development Cooperator (Cooperator) Program and the Market Access Program (MAP). Foreign organizations, whether government or private, may participate as third parties in activities carried out by U.S. organizations, but are not eligible for funding assistance from the program.

2. *Cost Sharing.* No private sector proposal will be considered without the element of cost-share from the participant and/or U.S. partners. The EMP is intended to complement, not supplant, the efforts of the U.S. private sector. There is no minimum or maximum amount of cost share, though the range in recent successful proposals has been between 35 and 75 percent. The degree of commitment to a proposed project represented by the amount and type of private funding are both used in determining which proposals will be approved for funding. Cost-share may be actual cash invested or professional time of staff assigned to the project. Proposals in which private industry is willing to commit cash, rather than in-kind contributions such as staff resources, will be given priority consideration.

Cost-sharing is not required for proposals from U.S. Government agencies, but is mandatory for all other eligible entities, even when they may be party to a joint proposal with a U.S. Government agency. Contributions from USDA or other U.S. Government agencies or programs may not be counted toward the stated cost share requirement. Similarly, contributions from foreign (non-U.S.) organizations may not be counted toward the cost share requirement, but may be counted in the total cost of the project.

3. *Other.* Proposals should include a justification for funding assistance from the program—an explanation as to what specifically could not be accomplished without Federal funding assistance and why participating organization(s) are unlikely to carry out the project without such assistance. Applicants may submit more than one proposal.

IV. Application and Submission Information

1. *Address to Request Application Package.* For 2005, EMP applicants have the opportunity to utilize the Unified Export Strategy (UES) application process, an online system which provides a means for interested applicants to submit a consolidated and strategically coordinated single proposal that incorporates funding requests for any or all of the market development programs administered by FAS.

Applicants are not required to use the UES, but are strongly encouraged to do so because it reduces paperwork and expedites the FAS processing and review cycle. Applicants planning to use the on-line system must contact the Marketing Operations Staff at (202) 720–4327 to obtain site access information including a user of id and password. The Internet-based application, including step-by-step instructions for its use, is located at the following URL address: *http://www.fas.usda.gov/cooperators.html.* A Help file is available to assist applicants with the process. Applicants using the online system should also provide, promptly after the deadline for submitting the on-line application, a printed or e-mailed version of each proposal (using Word or compatible format) to one of the following address:

Hand Delivery (including FedEx, DHL, UPS, etc.): U.S. Department of Agriculture, Foreign Agricultural Service, Marketing Operations Staff, Room 4932–South, 1400 Independence Avenue, SW., Washington, DC 20250–1042;

U.S. Postal Delivery: U.S. Department of Agriculture, Foreign Agricultural Service, Marketing Operations Staff, STOP 1042, 1400 Independence Ave., SW., Washington, DC 20250–1042. E-mail address: *emo@fas.usda.gov.*

Applicants electing not to use the online system must submit a printed copy of their application to one of the above addresses:

2. *Content and Form of Application Submission.* It is highly recommended that any organization considering applying to the program first obtain a copy of the EMP Regulations. The regulations contain information on requirements that a proposal must include in order to be considered for funding under the program, along with other important information. EMP regulations and additional information may be obtained from the Marketing

Operations Staff at the address above. The regulations are also available at the following URL address: *http://www.fas.usda.gov/mos/em-markets/em-markets.html.*

In addition, in accordance with the Office of Management and Budget's policy directive regarding the use of a universal identifier for all Federal grants or cooperative agreements, all applicants must submit a Dun and Bradstreet Data Universal Numbering System (DUNS) number prior to submitting applications. An applicant may request a DUNS number at no cost by calling the dedicated toll-free DUNS number request line on 1–866–705–5711.

Applications should be no longer than ten (10) pages and include the following information:

(a) Date of proposal;

(b) Name of organization submitting proposal;

(c) Organization address, telephone and fax numbers;

(d) Tax ID number;

(e) DUNS number;

(f) Primary contact person;

(g) Full title of proposal;

(h) Target market(s);

(i) Current conditions in the target market(s) affecting the intended commodity or product;

(j) Description of problem(s), *i.e.*, constraint(s), to be addressed by the project, such as: Inadequate knowledge of the market, insufficient trade contacts, lack of awareness by foreign officials of U.S. products and business practices, impediments: infrastructure, financing, regulatory or other non-tariff barriers, etc.;

(k) Project objectives;

(l) Performance measures: benchmarks for quantifying progress in meeting the objectives;

(m) Rationale: Explanation of the underlying reasons for the project proposal and its approach, the anticipated benefits, and any additional pertinent analysis;

(n) Clear demonstration that successful implementation will benefit a particular industry as a whole, not just the applicant(s);

(o) Explanation as to what specifically could not be accomplished without Federal funding assistance and why participating organization(s) are unlikely to carry out the project without such assistance;

(p) Specific description of activity/activities to be undertaken;

(q) Time line(s) for implementation of activity, including start and end dates (start date should be no earlier than 15 July 2005);

(r) Information on whether similar activities are or have previously been funded with USDA sources in target country/countries (*e.g.,* under MAP and/or FMD programs); and

(s) Detailed line item activity budget. Cost items should be allocated separately to each participating organization. Expense items constituting a proposed activity's overall budget (*e.g.,* salaries, travel expenses, consultant fees, administrative costs, etc.), with a line item costs for each, should be listed, clearly indicating:

(1) Which items are to be covered by EMP funding;

(2) Which by the participating U.S. organization(s); and

(3) Which by foreign third parties (if applicable). Cost items for individual consultant fees should show calculation of daily rate and number of days. Cost items for travel expenses should show number of trips, destinations, cost, and objective for each trip.

Qualifications of applicant(s) should be included as an attachment.

3. *Submission Dates and Times.* All proposals must be received by 5 p.m. eastern standard time on March 14, 2005, in the MOS office, either electronically, hand delivered, or by mail. Proposals received after this date and time will not be reviewed nor considered for program funding.

4. *Funding Restrictions.* Certain types of expenses are not eligible for reimbursement by the program, and there are limits on other categories of expenses such as indirect overhead charges, travel expenses and consulting fees. CCC will not reimburse expenditures made prior to approval of a proposal or unreasonable expenditures. Full details are available in the EMP regulations.

V. Application Review Information

1. *Criteria.* Key criteria used in judging proposals include:

—The appropriateness of the activities for the targeted market(s), and the extent to which the project identifies market barriers, *e.g.,* a fundamental deficiency in the market, and/or a recent change in market conditions;

—Potential of the project to expand U.S. market share, increase U.S. exports or sales, and/or improve awareness of U.S. agricultural commodities and products;

—Quality of the project's performance measures, and the degrees to which they relate to the objectives, proposed approach and activities, and deliverables;

—Justification for Federal funding;

—Budget: overall cost and the amount of funding provided by applications, the U.S. private sector and partners, if any; and

—Evidence that the organization has the knowledge, expertise, ability, and resources to successfully implement the project.

2. *Review and Selection Process.* All applications undergo a multi-phase review within FAS, by appropriate FAS field offices, and by the private sector Advisory Committee on Emerging Markets to determine qualifications, quality and appropriateness of projects, and reasonableness of project budgets prior to making recommendations to the deciding official.

3. *Anticipated Announcement Date.* Announcements of funding decisions for the EMP are anticipated on or about July 1, 2005.

VI. Award Administration Information

1. *Award Notices.* FAS will notify each applicant in writing of the final disposition of its application. FAS will send an approval letter and project agreement to each approved applicant. The approval letter and agreement will specify the terms and conditions applicable to the project, including the levels of EMP funding and cost-share contribution requirements.

2. *Administrative and National Policy Requirements.* Interested parties should review the EMP regulations which are available at the following URL address: *http://www.fas.usda.gov/mos/em-markets/em-markets.html.* Printed copies may be obtained by contacting MOS at (202) 720–4327.

3. *Reporting.* Quarterly progress reports for all programs one year or longer in duration are required. Projects of less than one year generally require a mid-term progress report. Final performance reports are due 90 days after completion of each project. Content for both types of reports is contained in the Project Agreement. Final financial reports are also due 90 days after completion of each project, as attachments to the final reports.

VII. Agency Contact(s)

For additional information and assistance, contact the Marketing Operations Staff, Foreign Agricultural Service, U.S. Department of Agriculture, Room 4932 South, STOP 1042, 1400 Independence Ave., SW., Washington, DC 20250–1042, phone: (202) 720–4327, fax: (202) 720–9361, e-mail: *emo@fas.usda.gov.*

Signed at Washington, DC, on January 4, 2005.

A. Ellen Terpstrd,

Administrator, Foreign Agricultural Service and Vice President, Commodity Credit Corporation.

[FR Doc. 05–722 Filed 1–12–05; 8:45 am]

BILLING CODE 3410–10–M

DEPARTMENT OF AGRICULTURE

Commodity Credit Corporation

Notice of Funds Availability: Inviting Applications for the Foreign Market Development Cooperator Program

Announcement Type: New.

Catalog of Federal Domestic Assistance (CFDA) Number: 10.600.

SUMMARY: The Commodity Credit Corporation (CCC) announces that it is inviting proposals for the 2006 Foreign Market Development Cooperator (Cooperator) Program. The intended effect of this notice is to solicit applications from eligible applicants and award funds in June 2005. The Cooperator Program is administered by personnel of the Foreign Agricultural Service (FAS).

DATES: All applications must be received by 5 p.m. eastern standard time, March 14, 2005. Applications received after this date will not be considered.

FOR FURTHER INFORMATION CONTACT: Entities wishing to apply for funding assistance should contact the Marketing Operations Staff, Foreign Agricultural Service, U.S. Department of Agriculture, Room 4932–South, STOP 1042, 1400 Independence Ave., SW., Washington, DC 20250–1042, phone: (202) 720–4327, fax: (202) 720–9361, e-mail: *mosadmin@fas.usda.gov.* Information is also available on the Foreign Agricultural Service, Web site at *http://www.fas.usda.gov/mos/programs/fmd.html.*

SUPPLEMENTARY INFORMATION:

I. Funding Opportunity Description

Authority: The Cooperator Program is authorized by title VII of the Agricultural Trade Act of 1978, as amended. Cooperator Program regulations appear at 7 CFR part 1484.

Purpose: The Cooperator Program is designed to create, expand, and maintain foreign markets for U.S. agricultural commodities and products through cost-share assistance. Financial assistance under the Cooperator Program will be made available on a competitive basis and applications will be reviewed against the evaluation criteria contained herein. All agricultural commodities, except tobacco, are eligible for consideration.

The FAS allocates funds in a manner that effectively supports the strategic decisionmaking initiatives of the Government Performance and Results Act (GPRA) of 1993 and the USDA's Food and Agricultural Policy (FAP). In deciding whether a proposed project will contribute to the effective creation, expansion, or maintenance of foreign markets, the FAS seeks to identify a clear, long-term agricultural trade strategy and a program effectiveness time line against which results can be measured at specific intervals using quantifiable product or country goals. The FAS also considers the extent to which a proposed project targets markets with the greatest potential. These factors are part of the FAS resource allocation strategy to fund applicants who can demonstrate performance and address the objectives of the GPRA and FAP.

II. Award Information

Under the Cooperator Program, the FAS enters into agreements with nonprofit U.S. trade organizations which have the broadest possible producer representation of the commodity being promoted and gives priority to those organizations which are nationwide in membership and scope. Cooperators may receive assistance only for the promotion of generic activities that do not involve promotions targeted directly to consumers. The program generally operates on a reimbursement basis.

III. Eligibility Information

1. *Eligible Applicants.* To participate in the Cooperator Program an applicant must be a nonprofit U.S. agricultural trade organization.

2. *Cost Sharing.* To participate in the Cooperator Program, an applicant must agree contribute resources to its proposed promotional activities. The Cooperator Program is intended to supplement, not supplant, the efforts of the U.S. private sector. The contribution must be stated in dollars and be at least 50 percent of the value of resources provided by CCC for activities conducted under the project agreement.

The degree of commitment of an applicant to the promotional strategies contained in its application, as represented by the agreed cost share contributions specified therein, is considered by the FAS when determining which applications will be approved for funding. Cost-share may be actual cash invested or in-kind contributions, such as professional staff time spent on design and execution of activities. The Cooperator Program regulations, in sections 1484.50 and 1484.51, provide detailed discussion of eligible and ineligible cost-share contributions.

3. *Other.* Applications should include a justification for funding assistance from the program—an explanation as to what specifically could not be accomplished without federal funding assistance and why participating organization(s) are unlikely to carry out the project without such assistance.

IV. Application and Submission Information

1. *Address to Request Application Package.* Organizations that are interested in applying for Cooperator Program funds are encouraged to submit their requests using the Unified Export Strategy (UES) format. The UES allows interested entities to submit a consolidated and strategically coordinated single proposal that incorporates requests for funding and recommendations for virtually all the FAS marketing programs, financial assistance programs, and market access programs. The suggested UES format encourages applicants to examine the constraints or barriers to trade that the face, identify activities, which would help overcome such impediments, consider the entire pool of complementary marketing tools and program resources, and establish realistic export goals. Applicants are not required, however, to use the UES format. Organizations can submit applications in the EUS format by two methods. The first allows an applicant to submit information directly to the FAS through the Unified Export Strategy (UES) application Internet website. The FAS highly recommends applying via the Internet, as this format virtually eliminates paperwork and expedites the FAS processing and review cycle. Applicants also have the option of submitting electronic versions (along with two paper copies) of their applications to the FAS on diskette.

Applicants planning to use the Internet-based system must contact the FAS Marketing Operations Staff on (202) 720–4327 to obtain site access information. The Internet-based application, including a Help file containing step-by-step instructions for its use, may be found at the following URL address: *http://www.fas.usda./gov/cooperators.html.*

Applicants who choose to submit applications on diskette can obtain an application format by contacting the Marketing Operations Staff on (202) 720–4327.

2. *Content and Form of Application Submission.* To be considered for the Cooperator Program, an applicant must submit to the FAS information required by the Cooperator Program regulations in section 1484.20. In addition, in accordance with the Office of Management and Budget's issuance of a final policy (68 FR 38402) regarding the need to identify entities that are receiving government awards, all applicants must submit a Dun and Bradstreet Data Universal Numbering System (DUNS) number. An applicant may request a DUNS number at no cost by calling the dedicated toll-free DUNS number request line at 1–866–705–5711. Incomplete applications and applications which do not otherwise conform to this announcement will not be accepted for review.

The FAS administers various other agricultural export assistance programs, including the Marketing Access Program (MAP), Cochran Fellowships, the Emerging Markets Programs, the Quality Samples Program, Technical Assistance for Specialty Crops Programs, and several Export Credit Guarantee programs. Any organization that is not interested in applying for the Cooperator Program but would like to request assistance through one of the other programs mentioned should contact the Marketing Operations Staff on (202) 720–4327.

3. *Submission Dates and Times.* All applications must be received by 5 p.m. eastern standard time, March 14, 2005. All Cooperator Program applicants, regardless of the method of submitting an application, also must submit by the application deadline, via hand delivery or U.S. mail, an original signed certification statement as specified in 7 CFR section 1484.20(a)(14). Applications or certifications received after this date will not be considered.

4. *Funding Restrictions.* Certain types of expenses are not eligible for reimbursement by the program, and there are limits on other categories of expenses. CCC will not reimburse unreasonable expenditures or expenditures made prior to approval. Full details are available in the Cooperator Program regulations in sections 1484.54 and 1484.55.

5. *Other Submission Requirements and Considerations.* All Internet-based applications must be properly submitted by 5 p.m. eastern standard time, March 14, 2005. Signed certification statements also must be received by that time at one of the addresses listed below.

All applications on diskette (with two accompanying paper copies and a signed certification statement) and any other form of application must be received by 5 p.m. eastern standard time, March 14, 2005, at one of the following address:

Hand Delivery (including FedEx, DHL, UPS, etc.): U.S. Department of Agriculture, Foreign Agricultural Service, Marketing Operations Staff, Room 4932–S, 14th and Independence Avenue, SW., Washington, DC 20250–1042.

U.S. Postal Delivery: U.S. Department of Agriculture, Foreign Agricultural Service, Marketing Operations Staff, STOP 1042, 1400 Independence Ave., SW., Washington, DC 20250–1042.

V. Application Review Information

1. *Criteria and Review Process.* Following is a description of the FAS process for reviewing applications and the criteria for allocating available Cooperator Program funds.

(1) Phase 1—Sufficiency Review and FAS Divisional Review

Applications received by the closing date will be reviewed by the FAS to determine the eligibility of the applicants and the completeness of the applications. These requirements appear at sections 1484.14 and 1484.20 of the Cooperator Program regulations. Applications that meet the requirements then will be further evaluated by the proper FAS Commodity Division. The Divisions will review each application against the criteria listed in sections 1484.21 and 1484.22 of the Cooperator Program regulations. The purpose of this review is to identify meritorious proposals and to recommend an appropriate funding level for each application based upon these criteria.

(2) Phase 2—Competitive Review

Meritorious applications then will be passed on to the Office of the Deputy Administrator, Commodity and Marketing Programs, for the purpose of allocating available funds among the applicants. Applications will compete for funds on the basis of the following allocation criteria (the number in parentheses represents a percentage weight factor):

(a) Contribution Level (40)

- The applicant's 6-year average share (2001–2006) of all contributions (contributions may include cash and goods and services provided by U.S. entities in support of foreign market development activities) compare to
- The applicant's 6-year average share (2001–2006) of all Cooperator marketing plan expenditures.

(b) Past Export Performance (20)

- The 6-year average share (2000–2005) of the value of exports promoted by the applicant compared to
- The applicant's 6-year average share (2000–2005) of all Cooperator marketing plan expenditures plus a 6-year average share (1999–2004) of MAP expenditures and a 6-year average share (1999–2004) of foreign overhead provided for co-location within a U.S. agricultural trade office.

(c) Past Demand Expansion Performance (20)

- The 6-year average share (2000–2005) of the total value of world trade of the commodities promoted by the applicant compared to
- The applicant's 6-year average share (2000–2005) of all Cooperator marketing plan expenditures plus a 6-year average share (1999–2004) of MAP expenditures and a 6-year average share (1999–2004) of foreign overhead provided for co-location within a U.S. agricultural trade office.

(d) Future Demand Expansion Goals (10)

- The projected total dollar value of world trade of the commodities being promoted by the applicant for the year 2011 compared to
- The applicant's requested funding level.

(e) Accuracy of Past Demand Expansion Projections (10)

- The actual dollar value share of world trade of the commodities being promoted by the applicant for the year 2004 compared to
- The applicant's past projected share of world trade of the commodities being promoted by the applicant for the year 2004, as specified in the 2004 Cooperator Program application.

The Commodity Divisions recommended funding levels for each applicant are converted to percentages of the total Cooperator Program funds available then multiplied by the total weight factor to determine the amount of funds allocated to each applicant.

2. *Anticipate Announcement Date:* Announcements of funding decisions for the Cooperator Program are anticipated during June 2005.

VI. Award Administration Information

1. *Award Notices.* The FAS will notify each applicant in writing of the final disposition of its application. The FAS will send an approval letter and project agreement to each approved applicant. The approval letter and agreement will specify the terms and conditions applicable to the project, including the levels of Cooperator Program funding and cost-share contribution requirements.

2. *Administrative and National Policy Requirements.* Interested parties should review the Cooperator Program

regulations which are available at the following URL address *http://www.fas.usda.gov/mos/programs/fmd.html.* Hard copies may be obtained by contacting MOS at (202) 720–4327.

3. Reporting. The FAS requires various reports and evaluations from Cooperators. Reporting requirements are detailed in the Cooperator Program regulations in sections 1484.53, 1484.70, and 1484.72.

VII. Agency Contact(s)

For additional information and assistance, contact the Marketing Operations Staff, Foreign Agricultural Service, U.S. Department of Agriculture, Room 4932–South, STOP 1042, 1400 Independence Ave., SW., Washington, DC 20250–1042, phone (202) 720–4327, fax: (202) 720–9351, email: *mosadmin@fas.usda.gov*

Signed at Washington, DC on January 4, 2005.

A. Ellen Terpstro,

Administrator, Foreign Agricultural Service and Vice President, Commodity Credit Corporation.

[FR Doc. 05–725 Filed 1–12–05; 8:45 am]

BILLING CODE 3410–10–M

DEPARTMENT OF AGRICULTURE

Commodity Credit Corporation

Notice of Funds Availability: Inviting Applications for the Market Access Program

Announcement Type: New.

Catalog of Federal Domestic Assistance (CFDA) Number: 10.601.

SUMMARY: The Commodity Credit Corporation (CCC) announces that it is inviting proposals for the 2005/2006 Market Access Program (MAP). The intended effect of this notice is to solicit applications from eligible applicants and award funds in June 2005. The MAP is administered by personnel of the Foreign Agricultural Service (FAS).

DATES: All applications must be received by 5 p.m. eastern standard time, March 14, 2005. Applications received after this date will not be considered.

FOR FURTHER INFORMATION CONTACT: Entities wishing to apply for funding assistance should contact the Marketing Operations Staff, Foreign Agricultural Service, U.S. Department of Agriculture, Room 4932–South, STOP 1042, 1400 Independence Avenue, SW., Washington, DC 20250–1042, phone: (202) 720–4327, fax: (202) 720–9361, e-mail: *mosadmin@fas.usda.gov.* Information is also available on the Foreign Agricultural Service Web site at *http://www.fas.usda.gov/mos/programs/mapprog.html.*

SUPPLEMENTARY INFORMATION:

I. Funding Opportunity Description

Authority: The MAP is authorized under section 203 of the Agricultural Trade Act of 1978, as amended. MAP regulations appear at 7 CFR part 1485.

Purpose: The MAP is designed to create, expand and maintain foreign markets for United States' agricultural commodities and products through cost-share assistance. Financial assistance under the MAP will be made available on a competitive basis and applications will be reviewed against the evaluation criteria contained herein. All agricultural commodities, except tobacco, are eligible for consideration.

The FAS allocates funds in a manner that effectively supports the strategic decision-making initiatives of the Government Performance and Results Act (GPRA) of 1993 and the USDA's Food and Agricultural Policy (FAP). In deciding whether a proposed project will contribute to the effective creation, expansion, or maintenance of foreign markets, the FAS seeks to identify a clear, long-term agricultural trade strategy and a program effectiveness time line against which results can be measured at specific intervals using quantifiable product or country goals. The FAS also considers the extent to which a proposed project targets markets with the greatest growth potential. These factors are part of the FAS resource allocation strategy to fund applicants who can demonstrate performance and address the objectives of the GPRA and FAP.

II. Award Information

Under the MAP, the CCC enters into agreements with eligible participants to share the costs of certain overseas marketing and promotion activities. MAP participants may receive assistance for either generic or brand promotion activities. The program generally operates on a reimbursement basis.

III. Eligibility Information

1. *Eligible Applicants.* To participate in the MAP, an applicant must be: a nonprofit U.S. agricultural trade organization, a nonprofit state regional trade group (*i.e.,* an association of State Departments of Agriculture), a U.S. agricultural cooperative, or a State agency. A small-sized U.S. commercial entity (other than a cooperative or producer association) may participate through a MAP participant.

2. *Cost Sharing.* To participate in the MAP, an applicant must agree to contribute resources to its proposed promotional activities. The MAP is intended to supplement, not supplant, the efforts of the U.S. private sector. In the case of generic promotion, the contribution must be stated in dollars and be at least 10 percent of the value of resources provided by CCC for such generic promotion. In the case of brand promotion, the contribution must be stated in dollars and be at least 50 percent of the total cost of such brand promotion.

The degree of commitment of an applicant to the promotional strategies contained in its application, as represented by the agreed cost share contributions specified therein, is considered by the FAS when determining which applications will be approved for funding. Cost-share may be actual cash invested or in-kind contributions, such as professional staff time spent on design and execution of activities. The MAP regulations, in section 1485.13(c), provide detailed discussion of eligible and ineligible cost-share contributions.

3. *Other.* Applications should include a justification for funding assistance from the program—an explanation as to what specifically could not be accomplished without Federal funding assistance and why participating organization(s) are unlikely to carry out the project without such assistance.

IV. Application and Submission Information

1. *Address to Request Application Package.* Organizations that are interested in applying for MAP funds are encouraged to submit their requests using the UES format. The UES allows interested entities to submit a consolidated and strategically coordinated single proposal that incorporates requests for funding and recommendations for virtually all the FAS marketing programs, financial assistance programs, and market access programs. The suggested UES format encourages applicants to examine the constraints or barriers to trade, which they face, identify activities, which would help overcome such impediments, consider the entire pool of complementary marketing tools and program resources, and establish realistic export goals. Applicants are not required, however, to use the UES format. Organizations can submit applications in the UES format by two methods. The first allows an application to submit information directly to the FAS through the Unified Export Strategy (UES) application Internet Web site. The FAS highly recommends applying via the Internet, as this format

virtually eliminates paperwork and expedites the FAS processing and review cycle. Applicants also have the option of submitting electronic versions (along with two paper copies) of their applications to the FAS on diskette.

Applicants planning to use the Internet-based system must contact the FAS Marketing Operations Staff on (202) 732–4327 to obtain site access information. The Internet-based application, including a Help file containing step-by-step instructions for its use, may be found at the following URL address: *http://www.fas.usda.gov/cooperators.html.*

Applicants who choose to submit applications on diskette can obtain an application format by contacting the Marketing Operations Staff on (202) 720–4327.

2. *Content and Form of Application Submission.* To be considered for the MAP, an applicant must submit to the FAS information required by the MAP regulations in section 1485.13. In addition, in accordance with the Office of Management and Budget's issuance of a final policy (68 FR 38402) regarding the need to identify entities that are receiving government awards, all applicants must submit a Dun and Bradstreet Data Universal Numbering System (DUNS) number. An applicant may request a DUNS number at no cost by calling the dedicated toll-free DUNS number request line at 1–866–705–5711. Incomplete applications and applications which do not otherwise conform to this announcement will not be accepted for review.

The FAS administers various other agricultural export assistance programs including the Foreign Market Development Cooperator (Cooperator) Program, Cochran Fellowships, the Emerging Markets Program, the Quality Samples Program, the Technical Assistance for Specialty Crops Program and several Export Credit Guarantee programs. Any organization that is not interested in applying for the MAP but would like to request assistance through one of the other programs mentioned should contact the Marketing Operations Staff on (202) 720–4327.

3. *Submission Dates and Times.* All applications must be received by 5 p.m. eastern standard time, March 14, 2005. All MAP applicants, regardless of the method of submitting an application, also must submit by the application deadline, via hand delivery or U.S. mail, an original signed certification statement as specified in 7 CFR 1485.13(a)(2)9i)(G). Applications or certifications received after this date will not be considered.

4. *Funding Restrictions.* Certain types of expenses are not eligible for reimbursement by the program, and there are limits on other categories of expenses. CCC will not reimburse unreasonable expenditures or expenditures made prior to approval. Full details are available in the MAP regulations in section 1485.16.

5. *Other Submission Requirements and Considerations.* All Internet-based applications must be properly submitted by 5 p.m. eastern standard time, March 14, 2005. Signed certification statements also must be received by that time at one of the addresses listed below.

All applications on diskette (with two accompanying paper copies and a signed certification statement) and any other form of application must be received by 5 p.m. eastern standard time, March 14, 2005, at one of the following addresses:

Hand Delivery (including FedEx, DHL, UPS, etc.): U.S. Department of Agriculture, Foreign Agricultural Service, Marketing Operations Staff, Room 4932–S, 14th and Independence Avenue, SW., Washington, DC 20250–1042.

U.S. Postal Delivery: U.S. Department of Agriculture, Foreign Agricultural Service, Marketing Operations Staff, STOP 1042, 1400 Independence Avenue, SW., Washington, DC 20250–1042.

V. Application Review Information

1. *Criteria and Review Process.* Following is a description of the FAS process for reviewing applications and the criteria for allocating available MAP funds.

(1) Phase 1—Sufficiency Review and FAS Divisional Review

Applications received by the closing date will be reviewed by the FAS to determine the eligibility of the applicants and the completeness of the applications. These requirements appear at sections 1485.12 and 1485.13 of the MAP regulations. Applications that meet the requirements then will be further evaluated by the proper FAS Commodity Division. The Divisions will review each application against the criteria listed in section 1485.14 of the MAP regulations. The purpose of this review is to identify meritorious proposals and to recommend an appropriate funding level for each application based upon these criteria.

(2) Phase 2—Competitive Review

Meritorious applications then will be passed on to the Office of the Deputy Administrator, Commodity and Marketing Programs, for the purpose of allocating available funds among the applicants. Applications will compete for funds on the basis of the following allocation criteria (the number in parentheses represents a percentage weight factor):

(a) Applicant's Contribution Level (40)

- The applicant's 4-year average share (2002–2005) of all contributions (cash and goods and services provided by U.S. entities in support of overseas marketing and promotion activities) compared to
- The applicant's 4-year average share (2002–2005) of the funding level for all MAP participants.

(b) Past Performance (30)

- The 3-year average share (2002–2004) of the value of exports promoted by the applicant compared to
- The applicant's 2-year average share (2003–2004) of the funding level for all MAP applicants plus, for those groups participating in the Cooperator program, the 2-year average share (2004–2005) of Cooperator marketing plan budgets, and the 2-year average share (2003–2004) of foreign overhead provided for co-location within a U.S. agricultural office;

(c) Projected Export Goals (15)

- The total dollar value of projected exports promoted by the applicant for 2005 compared to
- The applicant's requested funding level;

(d) Accuracy of Past Projections (15)

- Actual exports for 2003 as reported in the 2005 MAP application compared to
- Past projections for exports for 2003 as specified in the 2003 MAP application.

The Commodity Divisions' recommended funding levels for each applicant are converted to percentages of the total MAP funds available then multiplied by the total weight factor as described above to determine the amount of funds allocated to each applicant.

2. *Anticipated Announcement Date.* Announcements of funding decisions for the MAP are anticipated during June 2005.

VI. Award Administration Information

1. *Award Notices.* The FAS will notify each applicant in writing of the final disposition of its application. The FAS will send an approval letter and project agreement to each approved applicant. The approval letter and agreement will specify the terms and conditions applicable to the project, including the levels of MAP funding and cost-share contribution requirements.

2. *Administrative and National Policy Requirements.* Interested parties should review the MAP regulations which are available at the following URL address: *http://www.fas.usda.gov/mos/programs/mapprog.html.* Hard copies may be obtained by contacting MOS at (202) 720–4327.

3. *Reporting.* The FAS requires various reports and evaluations from MAP participants. Reporting requirements are detailed in the MAP regulations in section 1485.20(b) and (c).

VII. Agency Contact(s)

For additional information and assistance, contact the Marketing Operations Staff, Foreign Agricultural Service, U.S. Department of Agriculture, Room 4932 South, STOP 1042, 1400 Independence Ave., SW., Washington, DC 20250–1042, phone: (202) 720–4327, fax: (202) 720–9361, e-mail: *mosadmin@fas.usda.gov.*

Signed at Washington, DC on January 4, 2005.

A. Ellen Terpstra,

Administrator, Foreign Agricultural Service, and Vice President, Commodity Credit Corporation.

[FR Doc. 05–723 Filed 1–12–05; 8:45 am]

BILLING CODE 3410–10–M

DEPARTMENT OF AGRICULTURE

Commodity Credit Corporation

Notice of Funds Availability: Inviting Applications for the Quality Samples Program

Announcement Type: New.

Catalog of Federal Domestic Assistance (CFDA) Number: 10.605.

SUMMARY: The Commodity Credit Corporation (CCC) announces the availability of $2.5 million in funding for the 2005 Quality Samples Program (QSP). The intended effect of this notice is to solicit applications and award funds in June 2005. The QSP is administered by personnel of the Foreign Agricultural Service (FAS). This notice supercedes any prior notices concerning the QSP.

DATES: All proposals must be received by 5 p.m. eastern standard time, March 14, 2005. Applications received after this date will be considered only if funds are still available.

FOR FURTHER INFORMATION CONTACT: Entities wishing to apply for funding assistance should contact the Marketing Operations Staff, Foreign Agricultural Service, U.S. Department of Agriculture, Room 4932–S, STOP 1042, 1400 Independence Avenue, SW., Washington, DC 20250–1042, phone: (202) 720–4327, fax: (202) 720–9361, e-mail: *mosadmin@fas.usda.gov.* Information is also available on the Foreign Agricultural Service Web site at *http://www.fas.usda.gov/mos/programs/QSP.html.*

SUPPLEMENTARY INFORMATION:

I. Funding Opportunity Description

Authority: The QSP is authorized under section 5(f) of the CCC Charter Act, 15 U.S.C. 714c(f).

Purpose: The QSP is designed to encourage the development and expansion of export markets for U.S. agricultural commodities by assisting U.S. entities in providing commodity samples to potential foreign importers to promote a better understanding and appreciation for the high quality of U.S. agricultural commodities.

QSP participants will be responsible for procuring (or arranging for the procurement of) commodity samples, exporting the samples, and providing the technical assistance necessary to facilitate successful use of the samples by importers. Participants that are funded under this announcement may seek reimbursement for the sample purchase price and the costs of transporting the samples domestically to the port of export and then to the foreign port, or point, of entry. Transportation costs from the foreign port, or point, of entry to the final destination will not be eligible for reimbursement. CCC will not reimburse the costs incidental to purchasing and transporting samples, for example, inspection or documentation fees. Although providing technical assistance is required for all projects, CCC will not reimburse the costs of providing technical assistance. A QSP participant will be reimbursed after CCC reviews its reimbursement claim and determines that the claim is complete.

General Scope of QSP Projects: QSP projects are the activities undertaken by a QSP participant to provide an appropriate sample of a U.S. agricultural commodity to a foreign importer, or a group of foreign importers, in a given market. The purpose of the project is to provide information to an appropriate target audience regarding the attributes, characteristics, and proper use of the U.S. commodity. A QSP project addresses a single market/commodity combination.

As a general matter, QSP projects should conform to the following guidelines:

- Projects should benefit the represented U.S. industry and not a specific company or brand;
- Projects should develop a new market for a U.S. product, promote a new U.S. product, or promote a new use for a U.S. product, rather than promote the substitution of one established U.S. product for another;
- Sample commodities provided under a QSP project must be in sufficient supply and available on a commercial basis;
- The QSP project must either subject the commodity sample to further processing or substantial transformation in the importing country, or the sample must be used in technical seminars designed to demonstrate to an appropriate target audience the proper preparation or use of the sample in the creation of an end product;
- Samples provided in a QSP project shall not be directly used as part of a retail promotion or supplied directly to consumers. However, the end product, that is, the product resulting from further processing, substantial transformation, or a technical seminar, may be provided to end-use consumers to demonstrate to importers consumer preference for that end product; and,
- Samples shall be in quantities less than a typical commercial sale and limited to the amount sufficient to achieve the project goal (*e.g.,* not more than a full commercial mill run in the destination country).

QSP projects shall target foreign importers and target audiences who:

- Have not previously purchased the U.S. commodity which will be transported under the QSP;
- Are unfamiliar with the variety, quality attribute, or end-use characteristic of the U.S. commodity which will be transported under the QSP;
- Have been unsuccessful in previous attempts to import, process, and market the U.S. commodity which will be transported under the QSP (*e.g.,* because of improper specification, blending, or formulation; or sanitary or phytosanitary issues);
- Are interested in testing or demonstrating the benefits of the U.S. commodity which will be transported under the QSP; or,
- Need technical assistance in processing or using the U.S. commodity that will be transported under the QSP.

II. Award Information

Under this announcement, the number of projects per participant will not be limited. However, individual project will be limited to $75,000 of QSP reimbursement. Projects comprised of technical preparation seminars, that is, projects that do not include further processing or substantial

transformation, will be limited to $15,000 of QSP reimbursement as these projects require smaller samples. Financial assistance will be made available on a reimbursement basis; that is, cash advances will not be made available to any QSP participant.

All proposals will be reviewed against the evaluation criteria contained herein and funds will be awarded on a competitive basis. Funding for successful proposals will be provided through specific agreements. These agreements will incorporate the proposal as approved by FAS. FAS must approve in advance any subsequent changes to the project.

III. Eligibility Information

1. Eligible Applicants. Any United States private or government entity with a demonstrated role or interest in exporting U.S. agricultural commodities may apply to the program. Government organizations consist of Federal, State, and local agencies. Private organizations include non-profit trade associations, universities, agricultural cooperatives, state regional trade groups, and profit-making entities.

2. Cost Sharing. Although a minimum level of cost share contribution is not required under the program, FAS does consider the applicant's willingness to contribute resources, including cash and goods and services of the U.S. industry and foreign third parties, when determining which proposals are approved for funding.

IV. Application and Submission Information

1. Address to Request Application Package. Organizations can submit applications to the FAS through the Unified Export Strategy (UES) application Internet Web site. Applicants also have the option of submitting electronic versions in the UES format (along with two paper copies) of their applications to the FAS on diskette. However, the UES format is not required.

Applicants planning to use the UES Internet-based system must contact the FAS Marketing Operations Staff on (202) 720–4327 to obtain site access information including a user ID and password. The UES Internet-based application, including a Help file containing step-by-step instructions for its use, may be found at the following URL address: *http://www.fas.usda.gov/cooperators.html.*

Applicants who choose to submit applications on diskette can obtain an application format by contacting the Marketing Operations Staff, phone: (202) 720–4327, fax: (202) 720–9361, e-mail: *mosadmin@fas.usda.gov.*

2. Content and Form of Application Submission. To be considered for the QSP, an applicant must submit to the FAS information detailed in this notice. In addition, in accordance with the Office of Management and Budget's issuance of a final policy (68 FR 38402) regarding the need to identify entities that are receiving government awards, all applicants must submit a Dun and Bradstreet Data Universal Numbering System (DUNS) number. An applicant may request a DUNS number at no cost by calling the dedicated toll-free DUNS number request line at 1–866–705–5711. Incomplete applications and applications which do not otherwise conform to this announcement will not be accepted for review.

Applicants to the QSP are not required to submit proposals in any specific format; however, FAS recommends that proposals contain, at a minimum, the following:

(a) Organizational information, including:

- Organization's name, address, Chief Executive Officer (or designee), Federal Tax Identification Number (TIN), and DUNS number;
- Type of organization;
- Name, telephone number, fax number, and e-mail address of the primary contact person;
- A description of the organization and its membership;
- A description of the organization's prior export promotion experience; and
- A description of the organization's experience in implementing an appropriate trade/technical assistance component;

(b) Market information, including:

- An assessment of the market;
- A long-term strategy in the market; and
- U.S. export value/volume and market share (historic and goals) for 2001–2006;

(c) Project information, including:

- A brief project title;
- Amount of funding requested;
- A brief description of the specific market development trade constraint or opportunity to be addressed by the project, performance measures for the years 2005–2007 which will be used to measure the effectiveness of the project, a benchmark performance measure for 2004, the viability of long term sales to this market, the goals of the project, and the expected benefits to the represented industry;
- A description of the activities planned to address the constraint or opportunity, including how the sample will be used in the end-use performance trial, the attributes of the sample to be demonstrated and its end-use benefit, and details of the trade/technical servicing component (including who will provide and who will fund this component);
- A same description (*i.e.,* commodity, quality, type, and grade), including a justification for selecting a sample with such characteristics (this justification should explain in detail why the project could not be effective with a smaller sample);
- An itemized list of all estimated costs associated with the project for which reimbursement will be sought; and
- The importer's role in the project regarding handling and processing the commodity sample; and

(d) Information indicating all funding sources and amounts to be contributed by each entity that will supplement implementation of the proposed project. This may include the organization that submitted the proposal, private industry entities, host government, foreign third parties, CCC, FAS, or other Federal agencies. Contributed resources may include cash or goods and services.

3. Submission Dates and Times. All applications must be received by 5 p.m. eastern standard time, March 14, 2005. Applications received after this date will be considered only if funds are still available.

4. Funding Restriction. Proposals which request more than $75,000 of CCC funding for individual projects will not be considered. Projects comprised of technical preparation seminars will be limited to $15,000 in QSP funding. CCC will not reimburse expenditures made prior to approval of a proposal or unreasonable expenditures.

5. Other Submission Requirements. All applications on diskette (with two accompanying paper copies) and any other form of application must be received by 5 p.m. Eastern Standard time, March 14, 2005, at one of the following addresses:

Hand Deliver (including FedEx, UPS, etc.): U.S. Department of Agriculture, Foreign Agricultural Service, Marketing Operations Staff, Room 4932–S, 14th and Independence Avenue, SW., Washington, DC 20250–1042.

U.S. Postal Delivery: U.S. Department of Agriculture, Foreign Agricultural Service, Marketing Operations Staff, STOP 1042, 1400 Independence Avenue, SW., Washington, DC 20250–1042.

V. Application Review Information

1. *Criteria.* FAS will use the following criteria in evaluating proposals:

- The ability of the organization to provide an experienced staff with the requisite technical and trade experience to execute the proposal;
- The extent to which the proposal is targeted to a market in which the United States is generally competitive;
- The potential for expanding commercial sales in the proposed market;
- The nature of the specific market constraint or opportunity involved and how well it is addressed by the proposal;
- The extent to which the importer's contribution in terms of handling and processing enhances the potential outcome of the project;
- The amount of reimbursement requested and the organization's Willingness to contribute resources, including cash and goods and services of the U.S. industry and foreign third parties; and
- How well the proposed technical assistance component assures that performance trials will effectively demonstrate the intended end-use-benefit.

Highest priority for funding under this announcement will be given to meritorious proposals that target countries that meet either of the following criteria:

- Per capita income less than $9,075 (the ceiling on upper middle income economies as determined by the World Bank [World Development Indicators 2005]); and population greater than 1 million. Proposals may address suitable regional groupings, for example, the islands of the Caribbean Basin; or
- U.S. market share of imports of the commodity identified in the proposal of 10 percent of less.

2. *Review and Selection Process.* Proposals will be evaluated by the applicable FAS commodity division. The divisions will review each proposal against the factors described above. The purpose of this review is to identify meritorious proposals, recommend an appropriate funding level for each proposal based upon these factors, and submit the proposals and funding recommendations to the Deputy Administrator, Commodity and Marketing Programs.

3. *Anticipated Announcement Date.* Announcements of funding decisions for the QSP are anticipated during June 2005.

VI. Award Administration Information

1. *Award Notices.* The FAS will notify each applicant in writing of the final disposition of its application. The FAS will send an approval letter and agreement to each approved applicant. The approval letter and agreement will specify the terms and conditions applicable to the project, including the levels of QSP funding and any cost-share contribution requirements.

2. *Administrative and National Policy Requirements.* The agreements will incorporate the details of each project as approved by FAS. Each agreement will identify terms and conditions pursuant to which CCC will reimburse certain costs of each project. Agreements will also outline the responsibilities of the participant, including, but not limited to, procurement (or arranging for procurement) of the commodity sample at a fair market price, arranging for transportation of the commodity sample within the time limit specified in the agreement, (organizations should endeavor to ship commodities within 6 months of effective date of agreement), compliance with cargo preference requirements (shipment on United States flag vessels, as required), compliance with the Fly American Act requirements (shipment on United States air carriers, as required), timely and effective implementation of technical assistance, and submission of a written evaluation report within 90 days of expiration of the agreement.

QSP agreements are subject to review and verification by the FAS Compliance Review Staff. Upon request, a QSP participant shall provide to CCC the original documents which support the participant's reimbursement claims. CCC may deny a claim for reimbursement if the claim is not supported by adequate documentation.

3. *Reporting.* A written evaluation report must be submitted within 90 days of the expiration of each participant's QSP agreement. Evaluation reports should address all performance measures that were presented in the proposal.

VII. Agency Contact(s)

For additional information and assistance, contact the Marketing Operations Staff, Foreign Agricultural Service, U.S. Department of Agriculture, Room 4932 South, STOP 1042, 1400 Independence Avenue, SW., Washington, DC 20250–1042, Phone: (202) 720–4327, fax: (202) 720–9361, e-mail: *mosadmin@fas.usda.gov.*

Dated: Signed at Washington, DC on January 4, 2005.

A. Ellen Terpstra,

Administrator, Foreign Agricultural Service, and Vice President, Commodity Credit Corporation.

[FR Doc. 05–687 Filed 1–12–05; 8:45 am]

BILLING CODE 3410–10–M

DEPARTMENT OF AGRICULTURE

Commodity Credit Corporation

Notice of Funds Availability: Inviting Applications for the Technical Assistance for Specialty Crops Program

Announcement Type: New.

Catalog of Federal Domestic Assistance (CFDA) Number: 10.604.

SUMMARY: The Commodity Credit Corporation (CCC) announces the availability of funding for the 2005 Technical Assistance for Specialty Crops (TASC) Program. The intended effect of this notice is to solicit applications from the private sector and from government agencies for participation in the FY 2005 TASC Program. The TASC Program is administered by personnel of the Foreign Agricultural Service (FAS).

DATES: See paragraph IV.3 below for a detailed description of relevant dates.

FOR FURTHER INFORMATION CONTACT: Entities wishing to apply for funding assistance should contact the Marketing Operations Staff, Foreign Agricultural Service, U.S. Department of Agriculture, Room 4932–S, Stop 1042, 1400 Independence Ave., SW., Washington, DC 20250–1042, phone: (202) 720–4327, fax: (202) 720–9361, e-mail: *mosadmin@fas.usda.gov.* Information is also available on the Foreign Agricultural Service Web site at *http://www.fas.usda.gov/mos/tasc/tasc.html.*

SUPPLEMENTARY INFORMATION:

I. Funding Opportunity Description

Authority: The TASC Program is authorized by section 3205 of Pub. L. 107–171.

TASC regulations appear at 7 CFR part 1487.

Purpose: The TASC Program is designed to assist U.S. organizations by providing funding for projects that address sanitary, phytosanitary, and technical barriers that prohibit or threaten the export of U.S. specialty crops. U.S. specialty crops, for the purpose of the TASC Program, are defined to include all cultivated plants, or the products thereof, produced in the U.S., except wheat, feed grains, oilseeds cotton, rice, peanuts, sugar, and tobacco.

As a general matter, TASC Program projects should be designed to accomplish the following goals:

- Projects should address a sanitary, phytosanitary, or related technical barrier that prohibits or threatens the export of U.S. specialty crops;

• Projects should demonstrably benefit the represented industry and not a specific company or brand; and,

• Projects must address barriers to U.S. specialty crops that are currently available on a commercial basis and for which barrier removal would predominantly benefit U.S. exports.

Examples of expenses that the CCC may agree to reimburse under the TASC Program include, but are not limited to: initial pre-clearance programs, export protocol and work plan support, seminars and workshops, study tours, field surveys, development of pest lists, pest and disease research, database development, reasonable logistical and administrative support, and travel and per diem expenses.

II. Award Information

In general, all qualified proposals received before the specified application deadlines will complete for funding. The limited funds and the range of barriers affecting the exports of U.S. specialty crops worldwide preclude CCC from approving large budgets for individual projects. In prior years, the amount of funding per proposal has ranged from $13,000 to $250,000, the maximum allowed.

Applicants may submit multiple proposals, and applicants with previously approved TASC proposals may apply for additional funding. However, no TASC participant may have more than three approved projects underway at any given time.

The FAS will consider providing either grant funds as direct assistance to U.S. organizations or providing technical assistance on behalf of U.S. organizations, provided that the organization submits timely and qualified proposals. The FAS will review all proposals against the evaluation criteria contained in the program regulations.

Funding for successful proposals will be provided through specific agreements. These agreements will incorporate the proposal as approved by FAS. FAS must approve in advance any subsequent changes to the project. The FAS or another Federal agency may have involvement in the implementation of approved projects.

III. Eligibility Information

1. *Eligible Applicants:* Any United States organization, private or government, may apply to the program. Government organizations consist of federal, state, and local agencies. Private organizations include non-profit trade associations, universities, agricultural cooperatives, state regional trade groups, and private companies.

Foreign organizations, whether government or private, may participate as third parties in activities carried out by U.S. organizations, but are not eligible for funding assistance from the program.

2. *Cost Sharing or Matching:* Although a minimum level of cost share contribution is not required, it is very strongly encouraged in this highly competitive program. If provided, such support may be in the form of cash, goods, or in-kind services which are dedicate to the project by the organization that submitted the proposal, private industry entities, host governments, or foreign third parties.

IV. Application and Submission Information

1. *Address to Request Application Package:* Organizations can submit applications to the FAS through the Unified Export Strategy (UES) application Internet Web site. Applicants also have the option of submitting electronic versions in the UES format (along with two paper copies) of their applications to the FAS on diskette.

Applicants planning to use the UES Internet-based system must contact the FAS Marketing Operations Staff on (202) 720–4327 to obtain site access information including a user ID and password. The UES Internet-based application, including a Help file containing step-by-step instructions for its use, may be found at the following URL address: *http://www.fas.usda.gov/cooperators.html.* Applicants are not required to use the UES, but are strongly encouraged to do so because it reduces paperwork and expedites the FAS processing and review cycle.

Applicants who choose to submit applications on diskette can obtain an application format by contacting the Marketing Operations Staff, phone: (202) 720–4327, fax: (202) 720–9361, e-mail: *mosadmin@fas.usda.gov.*

2. *Content and Form of Application Submission:* All TASC proposals must contain complete information about the proposed projects as described in § 1487.5(b) of the TASC Program regulations. In addition, in accordance with the Office of Management and Budget's issuance of a final policy (68 FR 38402) regarding the use of a universal identifier for all Federal grants and cooperative agreements, all applicants must submit a Dun and Bradstreet Data Universal Numbering System (DUNS) number. An applicant may request a DUNS number at no cost by calling the dedicated toll-free DUNS number request line on 1–866–705–5711. Incomplete applications and applications which do not otherwise conform to this announcement will not be accepted for review.

3. *Submission Dates and Times:* TASC funding is limited, and in order to assure sufficient resources are available to meet unanticipated needs during the fiscal year, TASC proposals will, generally, only be evaluated on a semi-annual basis. That is:

- Proposals received prior to, but not later than 5 p.m. (local time Washington, DC) February 1, 2005, will be considered for funding with other proposals received by that date;
- Proposals received prior to but not later than 5 p.m. (local time Washington, DC) July 1, 2005, will be considered for funding with other proposals received by that date;
- Proposals not approved for funding during the applicable review period will be reconsidered for funding after the applicable review period only if the applicant specifically requests such reconsideration in writing, and only if funding remains available.
- Proposals received after 5 p.m. (local time, Washington, DC) July 1, 2005, will be considered for funding only if funding remains available.

Nothwithstanding the foregoing, a proposal maybe submitted for expedited consideration under the TASC Quick Response process, if, in addition to meeting all requirements of the TASC program, a proposal clearly identifies time-sensitive activity. In these cases, a proposal may be submitted at any time for an immediate evaluation.

All proposals will be date stamped upon receipt.

4. *Funding Restrictions:* Proposals which request more than $250,000 of CCC funding in a given year will not be considered. Proposals to fund projects that exceed three years in duration will not be considered. No TASC participant may have more than three approved projects underway at any given time. Although funded projects may take place in the United States, all eligible projects must specifically address sanitary, phytosanitary, or technical barriers to the export of U.S. specialty crops.

Certain types of expenses are not eligible for reimbursement by the program. For example, program funds shall not be used to reimburse the cost of market research, advertising, or other promotional expenses. CCC will not reimburse unreasonable expenditures or any expenditures made prior to approval of a proposal.

5. *Other Submission Requirements:* All Internet-based applications must be properly submitted by 5 p.m. (local time in Washington, DC) on February 1,

2005, or July 1, 2005, in order to be considered during the applicable review period.

All applications on diskette (with two accompanying paper copies) and any other applications must be received by 5 p.m. (local time in Washington, DC) on February 1, 2005, or July 1, 2005, at one of the following addresses:

Hand Delivery (including FedEx, DHL, UPS, etc.): U.S. Department of Agriculture, Foreign Agricultural Service, Marketing Operations Staff, Room 4942–S, 14th and Independence Avenue, SW., Washington, DC 20250–1042.

U.S. Postal Delivery: U.S. Department of Agriculture, Foreign Agricultural Service, Marketing Operations Staff, STOP 1042, 1400 Independence Ave., SW., Washington, DC 20250–1042.

V. Application Review Information

1. *Criteria:* The FAS follows the evaluation criteria set forth in § 1487.6 of the TASC regulations.

2. *Review and Selection Process:* The FAS will review proposals for eligibility and will evaluate each proposal against the factors described above. The purpose of this review is to identify meritorious proposals, recommend an appropriate funding level for each proposal based upon these factors, and submit the proposals and funding recommendations to the Deputy Administrator, Commodity and Marketing Programs. The FAS may, when appropriate to the subject matter of the proposal, request the assistance of other U.S. government experts in evaluating the merits of a proposal.

VI. Award Administration Information

1. *Award Notices:* The FAS will notify each applicant in writing of the final disposition of its application. The FAS will send an approval letter and agreement to each approved applicant. The approval letter and agreement will specify the terms and conditions applicable to the project, including levels of funding, timelines for implementation, and written evaluation requirements.

2. *Administrative and National Policy Requirements:* The agreements will incorporate the details of each project as approved by FAS. Each agreement will identify terms and conditions pursuant to which CCC will reimburse certain costs of each project. Agreements will also outline the responsibilities of the participant. Interested parties should review the TASC Program regulations found at 7 CFR part 1487 in addition to this announcement.

3. *Reporting:* TASC participants are subject to the reporting and recordkeeping requirements described in 7 CFR part 3019. In addition, participants are required to submit a written report(s), on no less than an annual basis, and a final report, each of which evaluates their TASC project using the performance measures presented in the approved proposal.

VII. Agency Contact

For additional information or assistance, contact the Marketing Operations Staff, Foreign Agricultural Service, U.S. Department of Agriculture, Room 4932–S, Stop 1042, 1400 Independence Ave., SW., Washington, DC 20250–1042, phone: (202) 720–4327, fax: (202) 720–9361, e-mail: *mosadmin@fas.usda.gov.*

Signed at Washington, DC on January 4, 2005.

A. Ellen Terpstra,

Administrator, Foreign Agricultural Service, and Vice President, Commodity Credit Corporation.

[FR Doc. 05–724 Filed 1–12–05; 8:45 am]

BILLING CODE 3410–10–M

DEPARTMENT OF AGRICULTURE

Forest Service

Newspapers Used for Publication of Legal Notice of Appealable Decisions for the Northern Region; Northern Idaho, Montana, North Dakota, and portions of South Dakota and Eastern Washington

AGENCY: Forest Service, USDA.

ACTION: Notice.

SUMMARY: This notice lists the newspapers that will be used by all Ranger Districts, Forests, Grasslands, and the Regional Office of the Northern Region to publish legal notices for public comment and decisions subject to appeal and predecisional administrative review under 36 CFR parts 215, 217, and 218. The intended effect of this action is to inform interested members of the public which newspapers will be used to publish legal notices for public comment or decisions; thereby allowing them to receive constructive notice of a decision, to provide clear evidence of timely notice, and to achieve consistency in administering the appeals process.

DATES: Publication of legal notices in the listed newspapers will begin with decisions subject to appeal that are made on or after January 15, 2005. The list of newspapers will remain in effect until another notice is published in the **Federal Register**.

FOR FURTHER INFORMATION CONTACT: Appeals and Litigation Group Leader; Northern Region; P.O. Box 7669; Missoula, Montana 59807. Phone: (406) 329–3696.

The newspapers to be used are as follows:

Northern Regional Office

Regional Forester decisions in Montana: The Missoulian, Great Falls Tribune, and The Billings Gazette.

Regional Forester decisions in Northern Idaho and Eastern Washington: The Spokesman Review and Lewiston Morning Tribune.

Regional Forester decisions in North Dakota: Bismarck Tribune.

Regional Forester decisions in South Dakota: Rapid City Journal.

Beaverhead/Deerlodge NF—Montana Standard.

Bitterroot NF—Ravalli Republic.

Clearwater NF—Lewiston Morning Tribune.

Custer NF—Billings Gazette (Montana), Rapid City Journal (South Dakota).

Dakota Prairie Grasslands—Bismarck Tribune (North and South Dakota).

Flathead NF—Daily Inter Lake.

Gallatin NF—Bozeman Chronicle.

Helena NF—Independent Record.

Idaho Panhandle NFs—Spokesman Review.

Kootenai NF—Daily Inter Lake.

Lewis & Clark NF—Great Falls Tribune.

Lolo NF—Missoulian.

Nez Perce NF—Lewiston Morning Tribune.

Supplemental notices may be placed in any newspaper, but time frames/deadlines will be calculated based upon notices in newspapers of record listed above.

Dated: January 5, 2005.

Kathleen A. McAllister,

Deputy Regional Forester.

[FR Doc. 05–706 Filed 1–12–05; 8:45 am]

BILLING CODE 3410–11–M

DEPARTMENT OF AGRICULTURE

Forest Service

Notice of Resource Advisory Committee Meeting

AGENCY: North Central Idaho Resource Advisory Committee, Kamiah, Idaho, Forest Service, USDA.

ACTION: Notice of meeting.

SUMMARY: Pursuant to the authorities in the Federal Advisory Committee Act (Pub. L. 92–463) and under the Secure Rural Schools and Community Self-

Determination Act of 2000 (Pub. L. 106–393) the Nez Perce and Clearwater National Forests' North Central Idaho Resource Advisory Committee will meet Thursday, January 27, 2005 in Orofino, Idaho for a business meeting. The meeting is open to the public.

SUPPLEMENTARY INFORMATION: The business meeting on January 5, at the Clearwater National Forest, Supervisor's Office, 12730 Hwy 12, Orofino, ID, begins at 10 a.m. (PST). Agenda topics will include discussion of potential projects. A public forum will begin at 2:30 PM (PST).

FOR FURTHER INFORMATION CONTACT: Ihor Mereszczak, Staff Officer and Designated Federal Officer, at (208) 935–2513.

Dated: January 5, 2005.

Ihor Mereszczak,

Acting Forest Supervisor.

[FR Doc. 05–682 Filed 1–12–05; 8:45 am]

BILLING CODE 3410–11–M

DEPARTMENT OF AGRICULTURE

Forest Service

Notice of Madison-Beaverhead Advisory Committee Meeting

AGENCY: Forest Service, USDA.

ACTION: Notice of meetings.

SUMMARY: Pursuant to the authorities in the Federal Advisory Committee Act (Pub. L. 92–463) and the Secure Rural Schools and Community Self-Determination Act of 2000 (Pub. L. 106–393), the Beaverhead-Deerlodge National Forest's Madison-Beaverhead Resource Advisory Committee will meet on Wednesday, February 9, 2005, from 10 a.m. until 4 p.m. in Dillon, Montana, for a business meeting. The meeting is open to the public.

DATES: Wednesday, February 9, 2005.

ADDRESSES: The meeting will be held at the USDA Service Center, at 420 Barrett Street, Dillon, MT 59725.

FOR FURTHER INFORMATION CONTACT: Thomas K. Reilly, Designated Forest Official (DFO), Forest Supervisor, Beaverhead-Deerlodge National Forest, at (406) 683–3973.

SUPPLEMENTARY INFORMATION: Agenda topics for these meetings include hearing and deciding on proposals for projects to fund under Title II of Pub. L. 106–393, hearing public comments, and other business. If the meeting location changes, notice will be posted in local newspapers, including the Dillon Tribune and The Montana Standard.

Dated: January 7, 2005.

Thomas K. Reilly,

Forest Supervisor.

[FR Doc. 05–707 Filed 1–12–05; 8:45 am]

BILLING CODE 3410–11–M

DEPARTMENT OF AGRICULTURE

Forest Service

Siskiyou County Resource Advisory Committee

AGENCY: Forest Service, USDA.

ACTION: Notice of meeting.

SUMMARY: The Siskiyou County Resource Advisory Committee will meet in Yreka, California, January 17, 2005. The meeting will include routine business and the review and recommendation for implementation of submitted project proposals.

DATES: The meeting will be held January 17, 2005, from 4:30 p.m. until 7 p.m.

ADDRESSES: The meeting will be held at the Yreka High School Library, Preece Way, Yreka, California.

FOR FURTHER INFORMATION CONTACT: Don Hall, RAC Coordinator, Klamath National Forest, (530) 841–4468 or electronically at *donaldhall@fs.fed.us*.

SUPPLEMENTARY INFORMATION: The meeting is open to the public. Public comment opportunity will be provided and individuals will have the opportunity to address the Committee at that time.

Dated: January 5, 2005.

Michael P. Lee

Designated Federal Official.

[FR Doc. 05–715 Filed 1–12–05; 8:45 am]

BILLING CODE 3410–11–M

DEPARTMENT OF AGRICULTURE

Forest Service

Notice of Meetings; Shasta-Trinity National Forest

AGENCY: Forest Service, USDA.

ACTION: Notice of meetings.

SUMMARY: The Shasta-Trinity National Forest will host a series of introductory meetings to initiate the collaborative Off-Highway Vehicle (OHV) Route Designation process on the Shasta-Trinity National Forest.

DATES: February 15, 16, 17 and 18 of 2005.

ADDRESSES:

February 15, 2005: Weaverville Fire Hall, 100 Bremer Street, Weaverville, CA 96093.

February 16, 2005: Trinity County Fairgrounds, South Highway 3, Hayfork, CA 96041.

February 17, 2005: Mt. Shasta Community Center, 629 Alder Street, Mt. Shasta, CA 96067.

February 18, 2005: USDA Service Center, 3644 Avtech Parkway, Redding, CA 96002.

FOR FURTHER INFORMATION CONTACT: Brenda Tracy, Assistant Public Use Staff Officer, at (530) 226–2500.

SUPPLEMENTARY INFORMATION: Over the next four years, the National Forests in California will designate a system of roads, trails and specifically defined areas for OHV use to provide quality recreation experiences and maximize the protection of resources.

A series of meetings will be needed to complete the OHV Route Designation process on the Shasta-Trinity National Forest. The public is encouraged to participate.

Dated: January 6, 2005.

J. Sharon Heywood,

Forest Supervisor.

[FR Doc. 05–714 Filed 1–12–05; 8:45 am]

BILLING CODE 3410–11–M

ARCHITECTURAL AND TRANSPORTATION BARRIERS COMPLIANCE BOARD

Courthouse Access Advisory Committee; Meeting

AGENCY: Architectural and Transportation Barriers Compliance Board.

ACTION: Notice of meeting.

SUMMARY: The Architectural and Transportation Barriers Compliance Board (Access Board) has established an advisory committee to advise the Board on issues related to the accessibility of courthouses covered by the Americans with Disabilities Act of 1990 and the Architectural Barriers Act of 1968. The Courthouse Access Advisory Committee (Committee) includes organizations with an interest in courthouse accessibility. This notice announces the date, times and location of the next Committee meeting, which will be open to the public.

DATES: The meeting of the Committee is scheduled for February 10, 2005 (beginning at 9 a.m. and ending at 5 p.m.) and February 11, 2005 (beginning at 9 a.m. and ending at 4:30 p.m.).

ADDRESSES: The meeting will be held at the Hyatt Regency Phoenix Hotel, 122 North Second Street, Phoenix, AZ 85004.

FOR FURTHER INFORMATION CONTACT: Elizabeth Stewart, Office of General Counsel, Architectural and Transportation Barriers Compliance Board, 1331 F Street, NW., suite 1000, Washington, DC 20004–1111. Telephone number (202) 272–0042 (Voice); (202) 272–0082 (TTY). E-mail *stewart@access-board.gov.* This document is available in alternate formats (cassette tape, Braille, large print, or computer disk). This document is also available on the Board's Internet site (*http://www.access-board.gov/caac/meeting.htm).*

SUPPLEMENTARY INFORMATION: In 2004, as part of the outreach efforts on courthouse accessibility, the Access Board established a Federal advisory committee to advise the Access Board on issues related to the accessibility of courthouses, particularly courtrooms, including best practices, design solutions, promotion of accessible features, educational opportunities, and the gathering of information on existing barriers, practices, recommendations, and guidelines. On October 12, 2004, the Access Board published a notice appointing 31 members to the Courthouse Access Advisory Committee. 69 FR 60608 (October 12, 2004). Members of the Committee include designers and architects, disability groups, members of the judiciary, court administrators, representatives of the codes community and standard-setting entities, government agencies, and others with an interest in the issues to be explored. The Committee held its initial meeting on November 4 and 5, 2004. Members discussed the current requirements for accessibility, committee goals and objectives and the establishment of subcommittees. Minutes of the November meeting may be found on the Access Board Web site at *http://www.access-board.gov/caac/minutes-nov04.htm.* At the February meeting of the Committee, members will tour several courthouses in the Phoenix, AZ area. The members will then continue to address issues both as a full Committee and in subcommittees.

Committee meetings are open to the public and interested persons can attend the meetings and communicate their views. Members of the public will have an opportunity to address the Committee on issues of interest to them and the Committee during public comment periods scheduled on each day of the meeting. Members of groups or individuals who are not members of the Committee are invited to participate on the subcommittees. The Access Board believes that participation of this kind can be very valuable for the advisory committee process.

The meeting will be held at a site accessible to individuals with disabilities. Real-time captioning will be provided. Individuals who require sign language interpreters should contact Elizabeth Stewart by January 27, 2005. Notices of future meetings will be published in the **Federal Register**.

Lawrence W. Roffee,

Executive Director.

[FR Doc. 05–698 Filed 1–12–05; 8:45 am]

BILLING CODE 8150–01–P

DEPARTMENT OF COMMERCE

International Trade Administration

North American Free-Trade Agreement, Article 1904; NAFTA Panel Reviews; Request for Panel Review

AGENCY: NAFTA Secretariat, United States Section, International Trade Administration, Department of Commerce.

ACTION: Correction to Notice of First Request for Panel Review.

SUMMARY: The Notice of First Request in NAFTA Case No. USA–CDA–2004–1904–02 published in the **Federal Register** on January 7, 2005 listed an incorrect date for filing of the complaints. The correct date for filing a complaint is January 26, 2005.

Dated: January 7, 2005.

Caratina L. Alston,

United States Secretary, NAFTA Secretariat.

[FR Doc. 05–688 Filed 1–12–05; 8:45 am]

BILLING CODE 3510–GT–P

DEPARTMENT OF COMMERCE

National Oceanic and Atmospheric Administration

[I.D. 010605C]

Endangered and Threatened Species; Take of Anadromous Fish

AGENCY: National Marine Fisheries Service (NOAA Fisheries), National Oceanic and Atmospheric Administration (NOAA), Commerce.

ACTION: Notice of availability and request for comments.

SUMMARY: Notice is hereby given of the availability of a Routine Road Maintenance Program (RMP) that Washington County, Oregon has submitted pursuant to the Endangered Species Act (ESA). NOAA Fisheries promulgated a protective rule for 14 threatened salmon and steelhead Evolutionarily Significant Units (ESUs). The RMP would affect six ESUs of threatened salmonids identified in the **SUPPLEMENTARY INFORMATION** section of this document. The ESA 4(d) rule provides for limits on ESA take prohibitions for the various activities set out in the rule. The RMP addresses the limit for routine road maintenance activities of any state, city, county or port. This notice serves to notify the public of the availability of the Washington County RMP for review and comment before a final approval or disapproval is made by NOAA Fisheries.

DATES: Written comments on the draft RMP must be received at the appropriate address or fax number (see ADDRESSES) no later than 5 p.m. Pacific Standard Time on February 14, 2005.

ADDRESSES: Written comments should be sent to Dr. Nancy Munn, Habitat Conservation Division, National Marine Fisheries Service, 525 NE Oregon Street, Suite 500, Portland, OR 97232.

Comments may also be faxed to 503–231–6893. Copies of the entire RMP are available on the Internet at: *http://www.co.washington.or.us/limit10*, or from the address posted on that site. Comments will not be accepted if submitted via email or the Internet.

FOR FURTHER INFORMATION CONTACT: Dr. Nancy Munn at phone number: 503–231–6269, or e-mail: *nancy.munn@noaa.gov*.

SUPPLEMENTARY INFORMATION: This notice is relevant to the following six salmon ESUs:

Chinook salmon (*Oncorhynchus tshawytscha*); threatened Upper Willamette River (UWR), and Lower Columbia River (LCR).

Steelhead (*Oncorhynchus mykiss*); threatened Upper Willamette River (UWR), and Lower Columbia River (LCR).

Coho salmon (*Oncorhynchus kisutch*); proposed as threatened Oregon Coast (OC).

Chum salmon (*Oncorhynchus keta*); threatened Columbia River (CR).

Background

Washington County, Department of Land Use and Transportation, Operations and Maintenance Division, submitted the RMP for routine road maintenance activities that might affect certain salmonid ESUs listed or proposed as threatened within the boundaries of Washington County. The RMP was designed so that routine road maintenance activities would be

protective of salmonids and their habitat.

As specified in the July 10, 2000, ESA 4(d) rule for salmon and steelhead (65 FR 42422) under limit 10(i), take prohibitions to threatened species of salmonids do not apply to routine road maintenance activities of a state, county, city or port that complies with a program that is substantially similar to that contained in the Oregon Department of Transportation (ODOT) Routine Road Maintenance Water Quality and Habitat Guide Best Management Practices (Guide, July 1999), and that is determined to meet or exceed the protections provided in the ODOT Guide. NOAA Fisheries may approve a routine road maintenance program of any state, city, county or port that contains management practices that are equivalent to or better than those in the ODOT Guide. Prior to final approval of a routine road maintenance program, NOAA Fisheries must publish notification in the Federal Register announcing the program's availability for public review and comment.

The Washington County RMP submittal includes a cover letter addressed to D. Robert Lohn, Regional Administrator of NOAA Fisheries, and a statement of commitment from Washington County to implement the RMP. In Part 1, the RMP provides the responsible entity and legal authority for the program and provides a description of the program, including a description of Washington County's Riparian Management Areas and their gravel road maintenance and dust abatement program. In Part 2, the RMP provides a description of the geographic area to which the program applies, including an analysis of the environmental baseline of the watersheds of the lower Columbia River and the lower Willamette River, and Oregon coast tributaries that are within the City of Portland. Part 2 also includes maps (most found in Attachment 3) and tables that describe various habitat parameters such as culverts that block fish passage, riparian condition, and water quality condition. In Part 3 , the RMP describes the listed species distribution and status, referring to distribution maps for steelhead and chinook found in Attachment 4. A list of relevant reports is provided in Part 4. In Part 5, the RMP summarizes the training, monitoring, and reporting elements of the RMP. In Part 6, the RMP makes an affirmative conclusion that the program is substantially similar to or better than ODOT's program, referring to a table in Attachment 1 that compares the two programs.

The RMP defines what activities are routine road maintenance. These consist of maintenance activities that are conducted on currently serviceable structures, facilities, and equipment, involve no expansion of or change in use, and do not result in significant negative hydrological impact. Washington County's best management practices (Attachment 2) includes some activities that differ from ODOT's. These include best management practices for surface work, ditch shaping and cleaning, and sweeping/flushing. The RMP provides information in Attachment 1 to support the assertion that Washington County's practices for these activities are as effective or more effective than ODOT's practices at protecting fish and their habitat. Approval or disapproval of the RMP will depend on NOAA Fisheries' findings after public review and comment.

Authority

Under section 4 of the ESA, the Secretary of Commerce is required to adopt such regulations as he deems necessary and advisable for the conservation of species listed as threatened. The ESA salmon and steelhead 4(d) rule (65 FR 424222, July 10, 2000) identifies specific categories of activities that contribute to the conservation of listed salmonids and sets out the criteria for such activities. The rule further provides that the prohibitions of paragraph (a) of the rule do not apply to activities associated with routine road maintenance provided that a state or local program has been approved by NOAA Fisheries to be in accordance with the salmon and steelhead 4(d) rule (65 FR 424222, July 10, 2000).

Dated: January 7, 2005.

Phil Williams,

Chief, Endangered Species Division, Office of Protected Resources, National Marine Fisheries Service.

[FR Doc. 05–756 Filed 1–12–05; 8:45 am]

BILLING CODE 3510–22–S

DEPARTMENT OF COMMERCE

National Oceanic and Atmospheric Administration

Availability of Seats for the Gray's Reef National Marine Sanctuary Advisory Council

AGENCY: National Marine Sanctuary Program (NMSP), National Ocean Service (NOS), National Oceanic and Atmospheric Administration, Department of Commerce (DOC).

ACTION: Notice and request for applications.

SUMMARY: The Gray's Reef National Marine Sanctuary (GRNMS or Sanctuary) is seeking applicants for the following newly-created and three vacant seats on its Sanctuary Adivsory Council (Council): Charter/commercial (for profit) Fishing (charter and commercial fishers), Sport Fishing (recreational hook-and-line and spear fishers), Sport Diving (divers, dive operators, dive clubs, and dive shops), and Regional Conservation. Applicants are chosen based upon their particular expertise and experience in relation to the seat for which they are applying; community and professional affiliations; philosophy regarding the protection and management of marine resources; and possibly the length of residence in the area affected by the Sanctuary. Applicants who are chosen as members should expect to serve 3-year terms, pursuant to the Council's Charter.

DATES: Applications are due by February 11, 2005.

ADDRESSES: Application information may be obtained from Becky Shortland, 10 Ocean Science Circle, Savannah, Georgia 31406; telephone (912) 598–2381; e-mail *Becky.Shortland@noaa.gov*. Letters of application should be sent to the attention of GRNMS Manager, Reed Bohne at the same address.

FOR FURTHER INFORMATION CONTACT: Becky Shortland, 10 Ocean Science Circle, Savannah, Georgia 31406; telephone (912) 598–2381; e-mail *Becky.Shortland@noaa.gov*.

SUPPLEMENTARY INFORMATION: GRNMS is one of the largest nearshore live-bottom reefs off the southeastern United States, encompassing approximately 17 square nautical miles. The area earned sanctuary designation in 1981. The sanctuary consists of a series of sandstone outcroppings and ledges up to 10 feet in height, in a predominantly sandy, flat-bottomed sea floor. The live bottom and ledge habitat support an abundant reef fish and invertebrate community. Loggerhead sea turtles, a threatened species, also use GRNMS year-round for foraging and resting, and the reef is within the known winter calving ground for the highly endangered Northern right whale.

The GRNMS Advisory Council was established in August 1999 to provide advice and recommendations on management and protection of the sanctuary. The Council, through its members, also serves as liaison to the community regarding sanctuary issues, and represents community interests,

concerns, and management needs to the sanctuary and NOAA.

Authority: 16 U.S.C. sections 1431, *et seq.*

(Federal Domestic Assistance Catalog Number 11.429 Marine Sanctuary Program)

Dated: January 3, 2005.

Daniel J. Basta,

Director, National Marine Sanctuary Program, National Ocean Services, National Oceanic and Atmospheric Administration.

[FR Doc. 05–747 Filed 1–12–04; 8:45 am]

BILLING CODE 3510–NK–M

DEPARTMENT OF COMMERCE

National Oceanic and Atmospheric Administration

Marine Protected Areas Federal Advisory Committee; Public Meeting

AGENCY: National Ocean Service, NOAA, Department of Commerce.

ACTION: Notice of open meeting.

SUMMARY: Notice is hereby given of the next meeting of the Marine Protected Areas Federal Advisory Committee (MPAFAC) in the Washington, DC metropolitan area.

DATES: The meeting will be held Tuesday, February 15, 2005 from 9 a.m. to 5:30 p.m., Wednesday, February 16, from 8 a.m. to 5 p.m., and Thursday, February 17, 2005 from 8 a.m. to 5 p.m. These times and the agenda topics described below may be subject to change. Refer to the Web page listed below for the most up-to-date meeting agenda.

ADDRESSES: The meeting will be held at the Hilton Crystal City, 2399 Jefferson Davis Highway, Arlington, Virginia 22202.

FOR FURTHER INFORMATION CONTACT: Lauren Wenzel, Designated Federal Officer, MPAFAC, National Marine Protected Areas Center, 1305 East-West Highway, Silver Spring, Maryland, 20910. (Phone: (301) 713–3100 x136, Fax: (301) 713–3110); e-mail: *lauren.wenzel@noaa.gov;* or visit the national MPA Center Web site at *https://www.mpa.gov*.

SUPPLEMENTARY INFORMATION: The MPAFAC, composed of external, knowledgeable representatives of stakeholder groups, has been established by the Department of Commerce to provide advice to the Secretaries of Commerce and Interior on implementation of Section 4 of Executive Order 13158 on MPAs. The meeting will be open to public participation, with a one and a half hour time period set aside from 4 p.m. to 5:30 p.m. on Tuesday, February 15, 2004, and one hour set aside from 8:10 a.m. to 9:10 a.m. on Thursday, February 17, 2004 for the Committee to receive verbal comments or questions from the public. In general, each individual or group making a verbal presentation will be limited to a total time of five (5) minutes. Copies of written statements should be submitted to the Designated Federal Official by Friday, February 11, 2004.

Matters to be Considered: On Tuesday, February 15, the Committee will hear from a speaker on Pacific State and territorial perspectives on the national system of marine protected areas, representatives of two regional fishery management councils, and representatives of tribal organizations. On Wednesday, February 16, the Committee will review and discuss the Committee's recommendations and will hear from speakers on marine protected areas science. On Thursday, February 17, the Committee will continue its consideration of recommendations, and discuss next steps to finalize them.

Dated: January 6, 2005.

Eldon Hout,

Director, Office of Ocean and Coastal Resource Management.

[FR Doc. 05–746 Filed 1–12–05; 8:45 am]

BILLING CODE 3510–08–P

DEPARTMENT OF COMMERCE

National Oceanic and Atmospheric Administration

[I.D. 122104D]

Mid-Atlantic Fishery Management Council (MAFMC); Meeting; Correction

AGENCY: National Marine Fisheries Service (NMFS), National Oceanic and Atmospheric Administration (NOAA), Commerce.

ACTION: Notice of public meeting; correction.

SUMMARY: The Trawl Survey Advisory Panel, composed of representatives from the Northeast Fisheries Science Center (NEFSC), the Mid-Atlantic Fishery Management Council (MAFMC), the New England Fishery Management Council (NEFMC), and several independent scientific researchers, will hold a public meeting.

DATES: January 26, 2005, from noon to 5 p.m. and January 27, 2005, from 9 a.m. to 4 p.m.

ADDRESSES: The meeting will be held at the Brookshire Suites (Inner Harbor), 120 E. Lombard Street, Baltimore, MD, telephone 410–625–1300.

Council address: Mid-Atlantic Fishery Management Council, 300 S. New Street, Room 2115, Dover, DE 19904.

FOR FURTHER INFORMATION CONTACT: Daniel T. Furlong, Executive Director, Mid-Atlantic Fishery Management Council; 300 S. New Street, Room 2115, Dover, DE 19904, telephone 302–674–2331, ext. 19.

SUPPLEMENTARY INFORMATION:

Correction

In the Mid-Atlantic Fishery Management Council notice published in the **Federal Register** on December 28, 2004, at 69 FR 77730, the hotel address has been corrected as set out in the **ADDRESSES** section of this notice. No other information has been changed.

Special Accommodations

This meeting is physically accessible to people with disabilities. Requests for sign language interpretation or other auxiliary aids should be directed to Debbie Donnangelo at the Mid-Atlantic Council Office (see **ADDRESSES**) at least five days prior to the meeting date.

Dated: January 10, 2005.

Alan D. Risenhoover,

Acting Director, Office of Sustainable Fisheries, National Marine Fisheries Service.

[FR Doc. E5–120 Filed 1–12–05; 8:45 am]

BILLING CODE 3510–22–S

DEPARTMENT OF COMMERCE

National Oceanic and Atmospheric Administration

[I.D. 011005A]

New England Fishery Management Council; Public Meeting

AGENCY: National Marine Fisheries Service (NMFS), National Oceanic and Atmospheric Administration (NOAA), Commerce.

ACTION: Public meeting.

SUMMARY: The New England Fishery Management Council (Council) will hold a three-day Council meeting on February 1–3, 2005, to consider actions affecting New England fisheries in the exclusive economic zone (EEZ).

DATES: The meeting will be held on Tuesday, February 1, 2005, beginning at 9 a.m. and on Wednesday and Thursday, February 2 and 3, beginning at 8:30 a.m.

ADDRESSES: The meeting will be held at the Marriott Courtyard Hotel, 1000 Market Street, Portsmouth, NH 03801; telephone (603) 436–2121. Requests for special accommodations should be addressed to the New England Fishery

Management Council, 50 Water Street, Mill 2, Newburyport, MA 01950; telephone (978) 465–0492.

FOR FURTHER INFORMATION CONTACT: Paul J. Howard, Executive Director, New England Fishery Management Council, (978) 465–0492.

SUPPLEMENTARY INFORMATION:

Tuesday, February 1, 2005

Following introductions, the Council will receive reports from the Council Chairman and Executive Director, the NMFS Regional Administrator, Northeast Fisheries Science Center and Mid-Atlantic Fishery Management Council liaisons, NOAA General Counsel and representatives of the U.S. Coast Guard, NMFS Enforcement and the Atlantic States Marine Fisheries Commission. The Council will review the Skate Plan Development Team's annual report on the status of the Northeast skate complex, in the context of recent management actions. The Scallop Committee report will occur before the lunch break and will include consideration of a modification to the ''broken trip'' limit rules in the Sea Scallop Fishery Management Plan. The Council will take final action on Framework Adjustment 17 to the FMP, which includes alternatives that would require some or all vessels with general category scallop permits to carry and operate vessel monitoring system equipment.

Wednesday, February 2, 2005

During the Wednesday morning session, the Council will receive a report from its Research Steering Committee concerning 2005 research priorities and recommendations on NOAA Fisheries experimental fishery permit process and related issues. A Groundfish Committee report will follow, to include a schedule for preparation of the next framework adjustment to the Northeast Multispecies FMP, as well as a list of issues to be addressed; consideration of initial action on a measure to remedy the disapproval of the participation of non-sector vessels in the Closed Area I Hook Gear Haddock Special Access Program; discussion of fishing vessel safety issues relative to the Multispecies FMP; and possible action on planning for the 2005 groundfish assessment updates and independent peer review. The status of the monkfish resource will be addressed at a Stock Assessment Public Review Workshop late in the afternoon on Wednesday.

Thursday, February 3, 2005

The morning session will begin with a summary of the January 5 Council Executive Committee meeting. Subjects to be covered will include recommendations for a course of action on the recent groundfish/lobster gear conflict, a draft Council conservation and management strategy (including a policy for Special Access Programs), joint fishery management plans and a briefing on the New England Fleet Visioning Project. The Habitat Committee chairman will provide an update on the EFH Omnibus Amendment ι2. Council staff will give a presentation on a pilot project to develop ecosystem approaches to fisheries management. Any other outstanding business will be addressed at the end of the day, following the Bycatch Committee Report. That committee will forward recommendations concerning potential actions to reduce the bycatch of the 2003 year class of haddock in various fisheries.

Although other non-emergency issues not contained in this agenda may come before this Council for discussion, those issues may not be the subjects of formal action during this meeting. Council action will be restricted to those issues specifically listed in this notice and any issues arising after publication of this notice that require emergency action under section 305(c) of the Magnuson-Stevens Act, provided that the public has been notified of the Council's intent to take final action to address the emergency.

Special Accommodations

This meeting is physically accessible to people with disabilities. Requests for sign language interpretation or other auxiliary aids should be directed to Paul J. Howard (see **ADDRESSES**) at least 5 days prior to the meeting date.

Dated: January 10, 2005.

Alan D. Risenhoover,

Acting Director, Office of Sustainable Fisheries, National Marine Fisheries Service.

[FR Doc. E5–121 Filed 1–12–05; 8:45 am]

BILLING CODE 3510–22–S

DEPARTMENT OF COMMERCE

National Oceanic and Atmospheric Administration

[I.D. 010705C]

Western Pacific Fishery Management Council; Public Meeting and Hearing

AGENCY: National Marine Fisheries Service (NMFS), National Oceanic and Atmospheric Administration (NOAA), Commerce.

ACTION: Notice of public meeting/public hearing.

SUMMARY: The Western Pacific Fishery Management Council (Council) will meet by conference call in January 2005. During the meeting the Council will consider revising the regulatory amendment under the Fishery Management Plan for Pelagic Fisheries of the Western Pacific concerning measures to conserve sea turtles. The Council will also consider whether certain exemptions from the use of long-handled dehookers should be provided for particular small longliners when fishing north of the equator. More specific agenda topics are provided under the **SUPPLEMENTARY INFORMATION** section of this notice.

DATES: The Council meeting will be held on January 26, 2005, beginning at 1 p.m. Hawaii-Aleutian standard time and concluding when all business items have concluded. The public hearing will be held during the Council meeting to give the public opportunity to comment.

ADDRESSES: The Council will meet via conference call. The public is invited to participate at the Council office: 1164 Bishop Street, Suite 1400, Honolulu, HI 96813; telephone: (808) 522–8220; fax: 808–522–8226.

FOR FURTHER INFORMATION CONTACT: Kitty M. Simonds, Executive Director; telephone: 808–522–8220.

SUPPLEMENTARY INFORMATION:

Background

At its 123rd meeting, the Council took final action and recommended that the requirements summarized under Agenda Topics (below) be implemented by a regulatory amendment under the Fishery Management Plan for Pelagic Fisheries of the Western Pacific containing additional measures to conserve sea turtles.

Agenda Topics

1. Operators and owners of longline vessels operating under general permits (vessels registered to general longline permits and those that in the future will be registered to American Samoa limited access longline permits) must annually attend a NMFS Protected Species Workshop - with consideration of mechanisms for remote attendance.

2. Longline vessels operating under general permits must carry and use dip nets, line clippers, and bolt cutters and follow resuscitation and release guidelines for accidentally caught turtles - with an exemption for small longliners (those with a freeboard of 3 feet (0.91 meters) or less) from the requirement to carry and use long-handled line clippers.

3. Non-longline fishing vessels targeting Pacific pelagic management unit species with hooks must remove trailing gear from accidently caught turtles and follow turtle resuscitation and release guidelines, wherever they fish.

4. Longline vessels operating under general permits must use circle hooks, mackerel-type bait and dehookers, when shallow-setting north of the equator.

During the preparation of an upcoming proposed rule for the regulatory amendment, it was noted that the amendment's text would require turtle handling practices by operators of non-longline pelagic fishing vessels as described in 50 CFR 223.206(d)(1)(i), (ii) and (iii). However the most recent Biological Opinion (BiOp) issued by NMFS for the Western Pacific Pelagic Fisheries on February 24, 2004, directs that these vessel operators use the handling practices described in 50 CFR 660.32(c) and (d), in addition to those described in 50 CFR 223.206(d)(1)(iii). Although the differences are minor, the Council intends to consider revising the regulatory amendment's text to reflect the latter practices so as to be consistent with the February 2004 BiOp.

The Council's regulatory amendment would also require operators of all longline vessels to carry and use long-handled dehookers to release turtles, when fishing north of the equator. Small longliners are exempted from using long-handled line clippers based on concerns that using long-handled line clippers on these small vessels would be unwieldy and could pose a hazard to sea turtles. The Council will therefore consider whether a similar exemption from the use of long-handled dehookers should be provided for these small longliners when fishing north of the equator.

A public hearing will be held during the Council meeting to give the public opportunity to comment before the Council takes action on this agenda item.

Other Business

Although non-emergency issues not contained in this agenda may come before the Council for discussion, those issues may not be the subject of formal Council action during this meeting. Council action will be restricted to those issues specifically listed in this document and to any issue arising after publication of this document that requires emergency action under section 305(c) of the Magnuson-Stevens Fishery Conservation and Management Act, provided that the public has been notified of the Council's intent to take final action to address the emergency.

Special Accommodations

This meeting is physically accessible to people with disabilities. Requests for sign language interpretation or other auxiliary aids should be directed to Kitty M. Simonds (see **FOR FURTHER INFORMATION CONTACT**) at least five days prior to the meeting date.

Dated: January 10, 2005.

Alan D. Risenhoover,

Acting Director, Office of Sustainable Fisheries, National Marine Fisheries Service.

[FR Doc. E5–132 Filed 1–12–05; 8:45 am]

BILLING CODE 3510–22–S

DEPARTMENT OF COMMERCE

National Oceanic and Atmospheric Administration

[I.D. 010705B]

Marine Mammals; File Nos. 1072–1771 and 540–1502

AGENCY: National Marine Fisheries Service (NMFS), National Oceanic and Atmospheric Administration (NOAA), Commerce.

ACTION: Issuance of permit and permit amendment.

SUMMARY: Notice is hereby given of the following actions: Dr. Colleen Reichmuth Kastak, Long Marine Laboratory, Institute of Marine Science, University of California at Santa Cruz, 100 Schaffer Road, Santa Cruz, CA 95060, has been issued a scientific research permit (No. 1072–1771–00); and John Calambokidis, Cascadia Research Collective, 218 1/2 West Fourth Avenue, Olympia, WA 98501, has been issued an amendment to scientific research Permit No. 540–1502–00.

ADDRESSES: The permit, permit amendment, and related documents are available for review upon written request or by appointment in the following office(s):

File Nos. 1072–1771 and 540–1502: Permits, Conservation and Education Division, Office of Protected Resources, NMFS, 1315 East-West Highway, Room 13705, Silver Spring, MD 20910; phone (301)713–2289; fax (301)713–0376;

File No. 540–1502: Northwest Region, NMFS, 7600 Sand Point Way NE, BIN C15700, Bldg. 1, Seattle, WA 98115–0700; phone (206)526–6150; fax (206)526–6426; and

File Nos. 1072–1771 and 540–1502: Southwest Region, NMFS, 501 West Ocean Blvd., Suite 4200, Long Beach, CA 90802–4213; phone (562)980–4001; fax (562)980–4018.

FOR FURTHER INFORMATION CONTACT: Amy Sloan or Tammy Adams, (301)713–2289.

SUPPLEMENTARY INFORMATION: Permit No. 1072–1771–00 has been issued under the authority of the Marine Mammal Protection Act of 1972, as amended (MMPA; 16 U.S.C. 1361 *et seq.*), and the Regulations Governing the Taking and Importing of Marine Mammals (50 CFR part 216).

Permit No. 1072–1771 authorizes continued research designed to evaluate hearing sensitivity, memory, and learning capabilities of up to seven captive pinnipeds (three California sea lions, *Zalophus californianus*; two Pacific harbor seals, *Phoca vitulina*; and two Northern elephant seals, *Mirounga angustirostris*).

The permit amendment (No. 540–1502–01) has been granted under the authority of the Marine Mammal Protection Act of 1972, as amended (16 U.S.C. 1361 *et seq.*), the Regulations Governing the Taking and Importing of Marine Mammals (50 CFR part 216), the Endangered Species Act of 1973, as amended (ESA; 16 U.S.C. 1531 *et seq.*), the regulations governing the taking, importing, and exporting of endangered and threatened species (50 CFR 222–226), and the Fur Seal Act of 1966, as amended (16 U.S.C. 1151 *et seq.*).

The amendment extends the expiration date of the permit from November 30, 2004 to November 30, 2005. No additional takes have been authorized. Mr. Calambokidis is authorized to (1) conduct aerial surveys to determine the abundance and distribution of marine mammals off the coasts of California, Oregon, and Washington; (2) conduct vessel surveys and photographic identification activities to determine the abundance, movements, and population structure of large whales in the North Pacific; (3) collect skin biopsies to determine sex, relatedness, and evaluate stock structure of large whales, especially blue and humpback whales; and (4) conduct tagging activities to examine the diving behavior, feeding, and movements of large whales.

In compliance with the National Environmental Policy Act of 1969 (42 U.S.C. 4321 *et seq.*), a final determination has been made that the activities proposed are categorically excluded from the requirement to prepare an environmental assessment or environmental impact statement.

Issuance of the permit amendment (No. 540–1502–01) as required by the ESA, was based on a finding that such permit amendment: (1) was applied for in good faith; (2) will not operate to the

disadvantage of such endangered species; and (3) is consistent with the purposes and policies set forth in section 2 of the ESA.

Dated: January 7, 2005.

Patrick Opay,

Acting Chief, Permits, Conservation and Education Division, Office of Protected Resources, National Marine Fisheries Service.

[FR Doc. 05–752 Filed 1–12–05; 8:45 am]

BILLING CODE 3510–22–S

DEPARTMENT OF COMMERCE

National Oceanic and Atmospheric Administration

[I.D. 010605D]

Endangered and Threatened Species; Take of Anadromous Fish

AGENCY: National Marine Fisheries Service (NMFS), National Oceanic and Atmospheric Administration (NOAA), Commerce.

ACTION: Application for scientific research permit 1515.

SUMMARY: Notice is hereby given that NMFS has received a scientific research permit application relating to Pacific salmon. The proposed research is intended to increase knowledge of species listed under the Endangered Species Act (ESA) and to help guide management and conservation efforts.

DATES: Comments or requests for a public hearing on the application must be received at the appropriate address or fax number (see **ADDRESSES**) no later than 5p.m. Pacific daylight-saving time on February 14, 2005.

ADDRESSES: Written comments on the application should be sent to Protected Resources Division, NMFS, F/NWO3, 525 NE Oregon Street, Suite 500, Portland, OR 97232–2737. Comments may also be sent via fax to 503–230–5435 or by e-mail to *resapps.nwr@NOAA.gov*.

FOR FURTHER INFORMATION CONTACT: Garth Griffin, Portland, OR (ph.: 503–231–2005, Fax: 503–230–5435, e-mail: *Garth.Griffin@noaa.gov*). Permit application instructions are available at *http://www.nwr.noaa.gov*.

SUPPLEMENTARY INFORMATION:

Species Covered in This Notice

The following listed species (evolutionarily significant unit) is covered in this notice:

Chinook salmon (*Oncorhynchus tshawytscha*): threatened upper Willamette River (UWR).

Authority

Scientific research permits are issued in accordance with section 10(a)(1)(A) of the ESA (16 U.S.C. 1531 *et seq.*) and regulations governing listed fish and wildlife permits (50 CFR 222–226). NMFS issues permits based on findings that such permits: (1) are applied for in good faith; (2) if granted and exercised, would not operate to the disadvantage of the listed species that are the subject of the permit; and (3) are consistent with the purposes and policy of section 2 of the ESA. The authority to take listed species is subject to conditions set forth in the permits.

Anyone requesting a hearing on the application listed in this notice should set out the specific reasons why a hearing on that application would be appropriate (see **ADDRESSES**). The holding of such a hearing is at the discretion of the Assistant Administrator for Fisheries, NOAA.

Application Received

Permit 1515

Water Works Consulting (WWC) is requesting a 2–year research permit to annually capture, handle, and release juvenile UWR chinook salmon. The research would take place in an artificial side-channel to the Willamette River, Oregon. The purposes of the research are to determine how such side-channels function compared to natural, river-created ones and whether the side-channel provides habitat for native fishes. The WWC intends to determine juvenile fish presence and abundance in the spring and late summer of 2005 and 2006. The research would benefit listed chinook by determining how effectively such side-channels help restore salmon habitat. The WWC proposes to capture the fish using seines and boat electrofishing equipment. Captured fish would be identified, counted, checked for tags and marks, and released. The WWC does not intend to kill any of the fish being captured, but a small number may die as an unintended result of the activities.

This notice is provided pursuant to section 10(c) of the ESA. NMFS will evaluate the application, associated documents, and comments submitted to determine whether the application meets the requirements of section 10(a) of the ESA and Federal regulations. The final permit decisions will not be made until after the end of the 30–day comment period. NMFS will publish notice of its final action in the **Federal Register**.

Dated: January 7, 2005.

Phil Williams,

Chief, Endangered Species Division, Office of Protected Resources, National Marine Fisheries Service.

[FR Doc. 05–757 Filed 1–12–05; 8:45 am]

BILLING CODE 3510–22–S

DEPARTMENT OF DEFENSE

Office of the Secretary

Board of Visitors Meeting

AGENCY: Defense Acquisition University.

ACTION: Board of visitors meeting.

SUMMARY: The next meeting of the Defense Acquisition University (DAU) Board of Visitors (BoV) will be held at the Defense Acquisition University–San Diego Campus. The purpose of this meeting is to report back to the BoV on continuing items of interest.

DATES: January 26, 2005 from 0900–1500.

ADDRESSES: Admiral Kidd Conference Center, Fleet Anti-Submarine Warfare Center, Naval Base Point Loma, San Diego, CA.

FOR FURTHER INFORMATION CONTACT: Ms. Patricia Cizmadia at (703) 805–5134.

SUPPLEMENTARY INFORMATION: The meeting is open to the public; however, because of space limitations, allocation of seating will be made on a first-come, first served basis. Persons desiring to attend the meeting should call Ms. Patricia Cizmadia at (703) 805–5134.

Dated: January 4, 2005.

L.M. Bynum,

Alternate OSD Federal Register Liaison Officer, Department of Defense.

[FR Doc. 05–693 Filed 1–12–05; 8:45 am]

BILLING CODE 5001–06–M

DEPARTMENT OF DEFENSE

Office of the Secretary

Publication of Housing Price Inflation Adjustment Under 50 U.S.C. App. § 531

AGENCY: DoD, Office of the Under Secretary (Personnel and Readiness).

ACTION: Notice.

SUMMARY: The Servicemembers Civil Relief Act, as codified at 50 U.S.C. App. § 531, prevents a landlord from evicting a service member (or the service member's family) from a residence during a period of military service except by court order. The law as originally passed by Congress applied to monthly rents of $2400 or less. The law

requires the Department of Defense to adjust this amount annually to reflect inflation, and to publish the new amount in the **Federal Register**. We have applied the inflation index required by the statute: the maximum monthly rental amount for 50 U.S.C. App. § 531 (a)(1)(A)(ii) will be $2534.32 as of January 1, 2005.

EFFECTIVE DATE: January 1, 2005.

FOR FURTHER INFORMATION CONTACT: Colonel C. Garcia, Officer of the Under Secretary of Defense for Personnel and Readiness, (703) 697–3387.

Dated: January 3, 2005.

L.M. Bynum,

Alternate OSD Federal Register Liaison Officer, Department of Defense.

[FR Doc. 05–694 Filed 1–12–05; 8:45 am]

BILLING CODE 5001–06–M

DEPARTMENT OF DEFENSE

Department of the Army

Intent To Grant an Exclusive License of a U.S. Government-Owned Patent

AGENCY: Department of the Army, DoD.

ACTION: Notice.

SUMMARY: In accordance with 35 U.S.C. 209 and 37 CFR 404.7(a)(1)(i), announcement is made of the intent to grant an exclusive, royalty-bearing, revocable license within the geographic area of the United States of America and its territories and possessions to U.S. Provisional Patent S.N. 60/533,375, filed December 24, 2003, entitled ''Identification of Small Molecules of Inhibitors of Anthrax Factor,'' to Microbiotix, Inc. with its principal place of business at 1 Innovation Drive, STE 15, Worcester, Massachusetts 01605–4332.

ADDRESSES: Commander, U.S. Army Medical Research and Materiel Command, ATTN: Command Judge Advocate, MCMR–JA, 504 Scott Street, Fort Detrick, Frederick, MD 21702–5012.

FOR FURTHER INFORMATION CONTACT: For patent issues, Ms. Elizabeth Arwine, Patent Attorney, (301) 619–7808. For licensing issues, Dr. Paul Mele, Office of Research & Technology Assessment, (301) 619–6664, both at telefax (301) 619–5034.

SUPPLEMENTARY INFORMATION: Anyone wishing to object to the grant of this license can file written objections along with supporting evidence, if any, within 15 days from the date of this publication. Written objections are to be filed with the Command Judge Advocate (*see* **ADDRESSES**).

Brenda S. Bowen,

Army Federal Register Liaison Officer.

[FR Doc. 05–690 Filed 1–12–05; 8:45 am]

BILLING CODE 3710–08–M

DEPARTMENT OF EDUCATION

Notice of Proposed Information Collection Requests

AGENCY: Department of Education.

SUMMARY: The Leader, Information Management Case Services Team, Regulatory Information Management Services, Office of the Chief Information Officer, invites comments on the proposed information collection requests as required by the Paperwork Reduction Act of 1995.

DATES: Interested persons are invited to submit comments on or before March 14, 2005.

SUPPLEMENTARY INFORMATION: Section 3506 of the Paperwork Reduction Act of 1995 (44 U.S.C. chapter 35) requires that the Office of Management and Budget (OMB) provide interested Federal agencies and the public an early opportunity to comment on information collection requests. OMB may amend or waive the requirement for public consultation to the extent that public participation in the approval process would defeat the purpose of the information collection, violate State or Federal law, or substantially interfere with any agency's ability to perform its statutory obligations. The Leader, Information Management Case Services Team, Regulatory Information Management Services, Office of the Chief Information Officer, publishes that notice containing proposed information collection requests prior to submission of these requests to OMB. Each proposed information collection, grouped by office, contains the following: (1) Type of review requested, *e.g.*, new, revision, extension, existing or reinstatement; (2) title; (3) summary of the collection; (4) description of the need for, and proposed use of, the information; (5) respondents and frequency of collection; and (6) reporting and/or recordkeeping burden. OMB invites public comment.

The Department of Education is especially interested in public comment addressing the following issues: (1) Is this collection necessary to the proper functions of the Department; (2) will this information be processed and used in a timely manner; (3) is the estimate of burden accurate; (4) how might the Department enhance the quality, utility, and clarity of the information to be collected; and (5) how might the Department minimize the burden of this collection on the respondents, including through the use of information technology.

Dated: January 7, 2005.

Angela C. Arrington,

Leader, Information Management Case Services Team, Regulatory Information Management Services, Office of the Chief Information Officer.

Office of Elementary and Secondary Education

Type of Review: Reinstatement.

Title: Survey on the Use of Funds Under Title II, Part A.

Frequency: Annually.

Affected Public: State, local, or tribal government, SEAs or LEAs (primary).

Reporting and Recordkeeping Hour Burden: Responses: 800. *Burden Hours:* 4,000.

Abstract: This study is being conducted to inform the Department's performance indicators for the Government Performance and Results Act (GPRA) report for the Title II, Part A program.

Requests for copies of the proposed information collection request may be accessed from *http://edicsweb.ed.gov,* by selecting the ''Browse Pending Collections'' link and by clicking on link number 2663. When you access the information collection, click on ''Download Attachments'' to view. Written requests for information should be addressed to U.S. Department of Education, 400 Maryland Avenue, SW., Potomac Center, 9th Floor, Washington, DC 20202–4700. Requests may also be electronically mailed to the Internet address *OCIO_RIMG@ed.gov* or faxed to (202) 245–6621. Please specify the complete title of the information collection when making your request.

Comments regarding burden and/or the collection activity requirements should be directed to Kathy Axt at her e-mail address *Kathy.Axt@ed.gov.* Individuals who use a telecommunications device for the deaf (TDD) may call the Federal Information Relay Service (FIRS) at 1–800–877–8339.

[FR Doc. E5–131 Filed 1–12–05; 8:45 am]

BILLING CODE 4000–01–P

DEPARTMENT OF EDUCATION

Office of Innovation and Improvement

Notice Reopening the Advanced Placement (AP) Test Fee Fiscal Year (FY) 2005 Competition

Catalog of Federal Domestic Assistance (CFDA) Number: 84.330B.

SUMMARY: On November 9, 2004, we published in the **Federal Register** (69 FR 65028) a notice inviting applications for the AP Test Fee FY 2005 competition. The original notice for this FY 2005 competition established a December 13, 2004 deadline date for eligible applicants to apply for funding under this program.

In order to afford as many eligible applicants as possible an opportunity to receive funding under this program, we are reopening the AP Test Fee FY 2005 competition. The new application deadline date for the competition is January 24, 2005.

DATES: *Deadline for Transmittal of Applications:* January 24, 2005 (by 4:30 p.m., Washington, DC time, if transmitted electronically or by hand-delivery).

Note: Applications for grants under the AP Test Fee program must be submitted electronically using the Electronic Grant Application System (e-Application) available through the Department's e-Grants system, unless a waiver is granted. For information (including dates and times) about how to submit your application electronically or to request a waiver of the electronic submission requirement, please refer to Section IV. 6. *Other Submission Requirements* in the November 9, 2004 notice (69 FR 65029–65030).

FOR FURTHER INFORMATION CONTACT: Madeline E. Baggett, U.S. Department of Education, 400 Maryland Avenue, SW., room 4W210, Washington, DC 20202–5943. Telephone: (202) 260–2502 or by e-mail: *madeline.baggett@ed.gov.*

If you use a telecommunications device for the deaf (TDD), you may call the Federal Relay Service (FRS) at 1–800–877–8339.

Individuals with disabilities may obtain this document in an alternative format (*e.g.*, Braille, large print, audiotape, or computer diskette) on request to the program contact person listed in this section.

SUPPLEMENTARY INFORMATION: Any eligible applicant may apply for funding under this program by the deadline in this notice. Eligible applicants that submitted their applications for the AP Test Fee FY 2005 competition to the Department prior to the competition's original deadline date of December 13, 2004 are not required to re-submit their applications or re-apply in order to be considered for FY 2005 awards under this program. We encourage eligible applicants to submit their applications as soon as possible to avoid any problems with filing electronic applications on the last day. The deadline for submission of applications will not be extended any further.

Electronic Access to This Document: You may view this document, as well as all other documents of this Department published in the **Federal Register**, in text or Adobe Portable Document Format (PDF) on the Internet at the following site: *http://www.ed.gov/news/fedregister.*

To use PDF you must have Adobe Acrobat Reader, which is available free at this site. If you have questions about using PDF, call the U.S. Government Printing Office (GPO), toll free, at 1–888–293–6498; or in the Washington, DC, area at (202) 512–1530.

Note: The official version of this document is the document published in the **Federal Register.** Free Internet access to the official edition of the **Federal Register** and the Code of Federal Regulations is available on GPO Access at: *http://www.gpoaccess.gov/nara/index.html.*

Dated: January 7, 2005.

Nina Shokraii Rees,

Assistant Deputy Secretary for Innovation and Improvement.

[FR Doc. E5–129 Filed 1–12–05; 8:45am]

BILLING CODE 4000–01–P

DEPARTMENT OF EDUCATION

Arts in Education Model Development and Dissemination Program

AGENCY: Office of Innovation and Improvement, Department of Education.

ACTION: Notice of proposed priority, requirements, and definitions.

SUMMARY: The Assistant Deputy Secretary for Innovation and Improvement proposes a priority, requirements, and definitions under the Arts in Education Model Development and Dissemination program. We may use this priority and these requirements and definitions for competitions in fiscal year (FY) 2005 and later years. We take this action to focus Federal financial assistance on an identified national need for the enhancement, expansion, documentation, evaluation, and dissemination of innovative, cohesive models that have demonstrated that they effectively: (1) Integrate standards-based arts education into the core elementary and middle school curricula; (2) strengthen standards-based arts instruction in these grades; and (3) improve elementary and middle schools students' academic performance, including their skills in creating, performing, and responding to the arts. We intend the priority, requirements, and definitions to increase the amount of information on effective models for arts education that is available nationally and to integrate the arts with standards-based education programs.

DATES: We must receive your comments on or before February 14, 2005.

ADDRESSES: Address all comments about the proposed priority, requirements, and definitions to Diane Austin, U.S. Department of Education, 400 Maryland Avenue, SW., room 4W214, Washington, DC 20202–5943. If you prefer to send your comments through the Internet, use the following address: *comments@ed.gov.*

You must include the term ''artsdemo'' in the subject line of your electronic message.

FOR FURTHER INFORMATION CONTACT: Diane Austin. Telephone: (202) 260–1280 or via Internet: *Diane.Austin@ed.gov.*

If you use a telecommunications device for the deaf (TDD), you may call the Federal Relay Service (FRS) at 1–800–877–8339.

Individuals with disabilities may obtain this document in an alternative format (*e.g.*, Braille, large print, audiotape, or computer diskette) on request to the contact person listed under **FOR FURTHER INFORMATION CONTACT.**

SUPPLEMENTARY INFORMATION:

Invitation To Comment

We invite you to submit comments regarding the proposed priority, requirements, and definitions in this notice. To ensure that your comments have maximum effect in developing the notice of final priority, requirements, and definitions, we urge you to identify clearly the specific proposed priority, requirement or definition that each comment addresses.

We invite you to assist us in complying with the specific requirements of Executive Order 12866 and its overall requirement of reducing regulatory burden that might result from the proposed priority, requirements, and definitions. Please let us know of any further opportunities we should take to reduce potential costs or increase potential benefits while preserving the effective and efficient administration of the program.

During and after the comment period, you may inspect all public comments about the proposed priority,

requirements, and definitions in room 4W214, 400 Maryland Avenue, SW., Washington, DC, between the hours of 8:30 a.m. and 4 p.m., Eastern time, Monday through Friday of each week except Federal holidays.

Assistance to Individuals With Disabilities in Reviewing the Rulemaking Record

On request, we will supply an appropriate aid, such as a reader or print magnifier, to an individual with a disability who needs assistance to review the comments or other documents in the public rulemaking record for the proposed priority, requirements, and definitions. If you want to schedule an appointment for this type of aid, please contact the person listed under **FOR FURTHER INFORMATION CONTACT.**

We will announce the final priority, requirements, and definitions in a notice in the **Federal Register.** We will determine the final priority, requirements, and definitions after considering responses to this notice and other information available to the Department. This notice does not preclude us from proposing additional priorities, requirements, and definitions, subject to meeting applicable rulemaking requirements.

Note: This notice does *not* solicit applications. In any year in which we choose to use the priority, requirements, and definitions, we invite applications through a notice in the **Federal Register**. When inviting applications, we designate the priority as absolute, competitive preference, or invitational. The effect of each type of priority follows:

Absolute Priority: Under an absolute priority we consider only applications that meet the priority (34 CFR 75.105(c)(3)).

Competitive Preference Priority: Under a competitive preference priority we give competitive preference to an application by either (1) awarding additional points, depending on how well or the extent to which the application meets the priority (34 CFR 75.105(c)(2)(i)); or (2) selecting an application that meets the competitive priority over an application of comparable merit that does not meet the priority (34 CFR 75.105(c)(2)(ii)).

Invitational Priority: Under an invitational priority we are particularly interested in applications that meet the invitational priority. However, we do not give an application that meets the invitational priority a competitive or absolute preference over other applications (34 CFR 75.105(c)(1)).

Discussion of Proposed Priority, Requirements, and Definitions

This program supports the development of, and dissemination of information about, model school-based arts education programs.

Priority

Proposed Priority

We propose the following priority for this program:

This priority supports projects that enhance, expand, document, evaluate, and disseminate innovative cohesive models that are based on research and have demonstrated their effectiveness in (1) integrating standards-based arts education into the core elementary or middle school curriculum, (2) strengthening standards-based arts instruction in the elementary or middle school grades, and (3) improving the academic performance, including their skills in creating, performing, and responding to the arts, of students in elementary or middle school.

In order to meet this priority an applicant must demonstrate that the model project for which it seeks funding (1) serves only elementary schools or middle schools, or both and (2) is linked to State and national standards intended to enable all students to meet challenging expectations, and to improving student and school performance.

Rationale: The Arts in Education Model Development and Dissemination program seeks to address the lack of high-quality, research-based arts education programs by encouraging partnerships of arts and education specialists to enhance, expand, and document effective models for improving arts education and student achievement, including performance on State or local standardized tests. The program seeks to provide more communities with solid information regarding innovative models for effectively strengthening arts instruction, improving students' skills in creating, performing, and responding to works of art, and increasing student achievement in other academic subjects. By proposing that projects serve students in elementary or middle schools only, we intend for this program to provide a vehicle for including arts instruction in the core curriculum of elementary and middle schools in a seamless manner. Unlike high schools, elementary and most middle schools do not have separate art classes in their curriculum.

Requirements

Proposed Application Requirement

We propose the following application requirement for this program:

To be eligible for Arts in Education Model Development and Dissemination funds, applicants must propose to address the needs of low-income children by carrying out projects that serve at least one elementary or middle school in which 35 percent or more of the children enrolled are from low-income families (based on data used in meeting the poverty criteria set out in Title I, Section 1113(a)(5) of the Elementary and Secondary Education Act of 1965, as amended by the No Child Left Behind Act of 2001 (ESEA)).

Rationale: Studies have found that improving the quality of arts education has a particularly positive impact on students from low-income backgrounds. Unfortunately, students from low socioeconomic backgrounds are almost twice as likely to attend arts-poor schools. We propose this application requirement in an attempt to address the needs of low-income children.

Proposed Eligibility Requirement

We propose the following eligibility requirement for this program:

To be eligible to receive funding under the Arts in Education Model Development and Dissemination program, an applicant must be:

(1) One or more LEAs, including charter schools that are considered LEAs under State law and regulations, that may work in partnership with one or more of the following:

- A State or local non-profit or governmental arts organization,
- A State educational agency (SEA) or regional educational service agency,
- An institution of higher education, or
- A public or private agency, institution, or organization, such as a community- or faith-based organization; or

(2) One or more State or local non-profit or governmental arts organizations that must work in partnership with one or more LEAs and may partner with one or more of the following:

- An SEA or regional educational service agency,
- An institution of higher education, or
- A public or private agency, institution, or organization, such as a community- or faith-based organization.

Note: If more than one LEA or arts organization wishes to form a consortium and jointly submit a single application, they must follow the procedures for group applications described in 34 CFR 75.127 through 34 CFR 75.129 of the Education Department General Administrative Regulations.

Rationale: The statute encourages collaborative activities with Federal agencies or institutions involved in arts education, arts educators, and organizations representing the arts,

including State and local arts agencies involved in arts education. Prior competitions under this program have been open to applications from a variety of public and private education and arts organizations. We have received feedback from stakeholders that collaborative programs are being effectively managed by such entities. In addition, various types of organizations are in positions to effectively manage and evaluate model arts integration programs that serve needy school children.

Definitions

Proposed Definitions

Several important terms associated with this program are not defined in the authorizing statute. We, therefore, propose, for the purpose of this program, to define the following terms:

Arts includes music, dance, theater, media, and visual arts, including folk arts.

Integrating means (i) encouraging the use of high-quality arts instruction in other academic/content areas and (ii) strengthening the place of the arts as a core academic subject in the school curriculum.

Based on research, when used with respect to an activity or a program, means that, to the extent possible, the activity or program is based on the most rigorous theory, research, and evaluation available and is effective in improving student achievement and performance and other program objectives.

Executive Order 12866

This notice of proposed priority, requirements, and definitions has been reviewed in accordance with Executive Order 12866. Under the terms of the order, we have assessed the potential costs and benefits of this regulatory action.

The potential costs associated with the notice of proposed priority, requirements, and definitions are those resulting from statutory requirements and those we have determined as necessary for administering this program effectively and efficiently.

In assessing the potential costs and benefits—both quantitative and qualitative—of this notice of proposed priority, requirements, and definitions, we have determined that the benefits of the proposed priority, requirements, and definitions justify the costs.

We also have determined that this regulatory action does not unduly interfere with State, local, and tribal governments in the exercise of their governmental functions.

Summary of Potential Costs and Benefits

The potential costs associated with the proposed priority, requirements, and definitions in this notice are minimal while the benefits are significant. Grantees may incur some costs associated with completing the application process in terms of staff and partner time, copying, and mailing or delivery.

The benefit of the proposed priority, requirements, and definitions in this notice is that grants supported under this program will be able to provide information on effective models. This information will be helpful to schools and communities looking for guidance on how to improve the educational performance of at-risk children and youth by providing arts education services and programs—especially programs incorporating arts education standards.

Intergovernmental Review

This program is subject to Executive Order 12372 and the regulations in 34 CFR part 79. One of the objectives of the Executive Order is to foster an intergovernmental partnership and a strengthened federalism. The Executive Order relies on processes developed by State and local governments for coordination and review of proposed Federal financial assistance.

This document provides early notification of our specific plans and action for this program.

Electronic Access to This Document

You may view this document, as well as all other Department of Education documents published in the **Federal Register**, in text or Adobe Portable Document Format (PDF) on the Internet at the following site: *http://www.ed.gov/news/fedregister.*

To use PDF you must have Adobe Acrobat Reader, which is available free at this site. If you have questions about using PDF, call the U.S. Government Printing Office (GPO) toll free, at 1–888–293–6498; or in the Washington, DC, area at (202) 512–1530.

Note: The official version of this document is the document published in the **Federal Register.** Free Internet access to the official edition of the **Federal Register** and the Code of Federal Regulations is available on GPO Access at: *http://www.gpoaccess.gov/nara/index.html.*

(Catalog of Federal Domestic Assistance Number 84.351D Arts in Education Model Development and Dissemination)

Program Authority: 20 U.S.C. 7271.

Dated: January 7, 2005.

Nina Shokraii Rees,

Assistant Deputy Secretary for Innovation and Improvement.

[FR Doc. E5–122 Filed 1–12–05; 8:45 am]

BILLING CODE 4000–01–P

DEPARTMENT OF EDUCATION

Professional Development for Arts Educators Program

AGENCY: Office of Innovation and Improvement, Department of Education.

ACTION: Notice of proposed priority, requirements, and definitions.

SUMMARY: The Assistant Deputy Secretary for Innovation and Improvement proposes a priority, requirements, and definitions under the Professional Development for Arts Educators program. We may use this priority and these requirements and definitions for competitions in fiscal year (FY) 2005 and later years. We take this action to focus Federal financial assistance on an identified national need for professional development for arts educators that focuses on the development, enhancement, and expansion of standards-based arts instruction or that integrates arts instruction with other subject area content, and to improve student achievement of low-income students in kindergarten through grade 12 (K–12). We intend the priority, requirements, and definitions to improve the performance of needy children and to increase the amount of information on effective professional development for arts educators that is available nationally.

DATES: We must receive your comments on or before February 14, 2005.

ADDRESSES: Address all comments about the proposed priority, requirements, and definitions to Carol Sue Fromboluti, U.S. Department of Education, 400 Maryland Avenue, SW., room 4W233, Washington, DC 20202–5943. If you prefer to send your comments through the Internet, use the following address: *comments@ed.gov*.

You must include the term ''artspd'' in the subject line of your electronic message.

FOR FURTHER INFORMATION CONTACT: Carol Sue Fromboluti. Telephone: (202) 205–9654 or via Internet: *Carol.Fromboluti@ed.gov*.

If you use a telecommunications device for the deaf (TDD), you may call the Federal Relay Service (FRS) at 1–800–877–8339.

Individuals with disabilities may obtain this document in an alternative

format (*e.g.*, Braille, large print, audiotape, or computer diskette) on request to the contact person listed under **FOR FURTHER INFORMATION CONTACT**.

SUPPLEMENTARY INFORMATION:

Invitation To Comment

We invite you to submit comments regarding the proposed priority, requirements, and definitions in this notice. To ensure that your comments have maximum effect in developing the notice of final priority, requirements, and definitions, we urge you to identify clearly the specific proposed priority, requirement, or definition that each comment addresses.

We invite you to assist us in complying with the specific requirements of Executive Order 12866 and its overall requirement of reducing regulatory burden that might result from the proposed priority, requirements, and definitions. Please let us know of any further opportunities we should take to reduce potential costs or increase potential benefits while preserving the effective and efficient administration of the program.

During and after the comment period, you may inspect all public comments about the proposed priority, requirements, and definitions in room 4W242, 400 Maryland Avenue, SW., Washington, DC, between the hours of 8:30 a.m. and 4 p.m., eastern time, Monday through Friday of each week except Federal holidays.

Assistance to Individuals With Disabilities in Reviewing the Rulemaking Record

On request, we will supply an appropriate aid, such as a reader or print magnifier, to an individual with a disability who needs assistance to review the comments or other documents in the public rulemaking record for the proposed priority, requirements, and definitions. If you want to schedule an appointment for this type of aid, please contact the person listed under **FOR FURTHER INFORMATION CONTACT.**

We will announce the final priority, requirements, and definitions in a notice in the **Federal Register**. We will determine the final priority, requirements, and definitions after considering responses to this notice and other information available to the Department. This notice does not preclude us from proposing additional priorities, requirements, and definitions, subject to meeting applicable rulemaking requirements.

Note: This notice does *not* solicit applications. In any year in which we choose to use the proposed priority, requirements, and definitions, we invite applications through a notice in the **Federal Register**. When inviting applications, we designate the priority as absolute, competitive preference, or invitational. The effect of each type of priority follows:

Absolute Priority: Under an absolute priority we consider only applications that meet the priority (34 CFR 75.105(c)(3)).

Competitive Preference Priority: Under a competitive preference priority we give competitive preference to an application by either (1) awarding additional points, depending on how well or the extent to which the application meets the priority (34 CFR 75.105(c)(2)(i)); or (2) selecting an application that meets the competitive priority over an application of comparable merit that does not meet the priority (34 CFR 75.105(c)(2)(ii)).

Invitational Priority: Under an invitational priority we are particularly interested in applications that meet the invitational priority. However, we do not give an application that meets the invitational priority a competitive or absolute preference over other applications (34 CFR 75.105(c)(1)).

Discussion of Proposed Priority, Requirements, and Definitions

Through this program, the Department intends to fund model professional development programs for music, dance, drama, and visual arts educators of K–12 students in high-poverty schools. The purpose of this program is to strengthen standards-based arts education programs and to help ensure that all students meet challenging State academic content standards and challenging State student academic achievement standards in the arts.

Priority

Proposed Priority

We propose the following priority for this program:

This priority supports professional development programs for K–12 arts educators that use innovative instructional methods and current knowledge from education research and focus on—

(1) The development, enhancement, or expansion of standards-based arts education programs; or

(2) The integration of standards-based arts instruction with other core academic area content.

In order to meet this priority, an applicant must demonstrate that the project for which it seeks funding is linked to State and national standards intended to enable all students to meet challenging expectations, and to improving student and school performance.

Rationale: It is the intent of this program to provide professional development programs for arts educators that can be linked to student achievement, including performance on State or local standardized tests. While arts content and achievement standards have been voluntarily adopted in many States throughout the country, teachers often need professional development on how to implement education standards both for arts programs and for programs designed to integrate arts with other subject areas. The proposed priority would support projects that would provide professional development services that are linked to learning standards.

Requirements

Proposed Application Requirement

We propose the following application requirement for this program:

To be eligible for Professional Development for Arts Educators Program funds, applicants must propose to carry out professional development programs for art educators of K–12 low-income children and youth by implementing projects in schools in which 50 percent or more of the children enrolled are from low-income families (based on the poverty criteria set out in Title I, Section 1113(a)(5) of the Elementary and Secondary Education Act of 1965, as amended by the No Child Left Behind Act of 2001 (ESEA)).

Rationale: Studies have found that improving the quality of arts education has a particularly positive impact on students from low-income backgrounds. We believe this poverty requirement is necessary in order to focus services on the most needy children.

Proposed Eligibility Requirement

We propose the following eligibility requirement for this program:

To be eligible to receive funding under the Professional Development for Arts Educators program, an applicant must be—

A local educational agency (LEA), which may be a charter school that is considered an LEA, that is acting on behalf of an individual school or schools that meets the poverty criterion with respect to children from low-income families that is specified in the application requirement elsewhere in this notice, and that must work in partnership with one or more of the following—

(1) A State or local non-profit or governmental arts organization;

(2) A State educational agency (SEA) or regional educational service agency;

(3) An institution of higher education; or

(4) A public or private agency, institution, or organization, including a museum, an arts education association, a library, a theater, or a community-or faith-based organization.

Rationale: The most effective professional development programs are systemic and have the full support of school leadership. Therefore, it is essential that eligibility be limited to LEAs. Professional development in the area of arts education is often enhanced when it taps the expertise of professional arts organizations or other entities. Accordingly, an LEA would be required to partner with one of these organizations.

Definitions

Proposed Definitions

The terms ''arts educator'' and ''integrate'', which are important concepts associated with this program, are not defined in the authorizing statute. We, therefore, propose, for the purpose of this program, to define these terms as follows:

Arts educator means a teacher who works in music, drama, dance, or the visual arts.

Integrate means, in the context of projects funded under this program, to strengthen (i) the use of high-quality arts instruction within other academic content areas, and (ii) the place of the arts as a core academic subject in the school curriculum.

Executive Order 12866

This notice of proposed priority, requirements, and definitions has been reviewed in accordance with Executive Order 12866. Under the terms of the order, we have assessed the potential costs and benefits of this regulatory action.

The potential costs associated with the notice of proposed priority, requirements, and definitions are those resulting from statutory requirements and those we have determined as necessary for administering this program effectively and efficiently.

In assessing the potential costs and benefits—both quantitative and qualitative—of this notice of proposed priority, requirements, and definitions, we have determined that the benefits of the proposed priority, requirements, and definitions justify the costs.

We also have determined that this regulatory action does not unduly interfere with State, local, and tribal governments in the exercise of their governmental functions.

Summary of Potential Costs and Benefits

The potential costs associated with the proposed priority, requirements, and definitions in this notice are minimal, while the benefits are significant. Grantees may incur some costs associated with completing the application process in terms of staff and partner time, copying, and mailing or delivery.

The benefit of the proposed priority, requirements, and definitions in this notice is that grantees will develop professional development programs for arts educators, especially those programs that incorporate arts education standards and are designed to improve the educational performance of at-risk children and youth.

Intergovernmental Review

This program is subject to Executive Order 12372 and the regulations in 34 CFR part 79. One of the objectives of the Executive order is to foster an intergovernmental partnership and strengthened federalism. The Executive order relies on processes developed by State and local governments for coordination and review of proposed Federal financial assistance.

This document provides early notification of our specific plans and action for this program.

Electronic Access to This Document

You may view this document, as well as all other Department of Education documents published in the **Federal Register**, in text or Adobe Portable Document Format (PDF) on the Internet at the following site: *http://www.ed.gov/news/fedregister.*

To use PDF you must have Adobe Acrobat Reader, which is available free at this site. If you have questions about using PDF, call the U.S. Government Printing Office (GPO) toll free, at 1–888–293–6498; or in the Washington DC area at (202) 512–1530.

Note: The official version of this document is the document published in the **Federal Register**. Free Internet access to the official edition of the **Federal Register** and the Code of Federal Regulations is available on GPO Access at: *http://www.gpoaccess.gov/nara/index.html.*

Program Authority: 20 U.S.C. 7271.

(Catalog of Federal Domestic Assistance Number 84.351C Professional Development for Arts Educators)

Dated: January 7, 2005.

Nina Shokraii Rees,

Assistant Deputy Secretary for Innovation and Improvement.

[FR Doc. E5–125 Filed 1–12–05; 8:45 am]

BILLING CODE 4000–01–P

DEPARTMENT OF EDUCATION

Office of Special Education and Rehabilitative Services, Individuals With Disabilities Education Act, as Amended by the Individuals With Disabilities Education Improvement Act of 2004

ACTION: Notice of public meeting to seek comments and suggestions on regulatory issues under the Individuals with Disabilities Education Act (IDEA), as amended by the Individuals with Disabilities Education Improvement Act of 2004.

SUMMARY: The Secretary announces plans to hold the first of a series of informal public meetings to seek comments and suggestions from the public prior to developing and publishing proposed regulations to implement programs under the recently revised Individuals with Disabilities Education Act.

Date and Time of Public Meeting: Friday, January 28, 2005 from 3:30 p.m. to 5:30 p.m. and from 6:30 p.m. to 8:30 p.m.

ADDRESSES: University of Delaware, University of Delaware Conference Center, John M. Clayton Hall, Room 106, 100 Pencader Way, Newark, DE 19716.

FOR FURTHER INFORMATION CONTACT: Troy R. Justesen. Telephone: (202) 245–7468.

SUPPLEMENTARY INFORMATION:

Background

On December 3, 2004, the President signed into law Pub. L. 108–446, the Individuals with Disabilities Education Improvement Act of 2004, amending the Individuals with Disabilities Education Act (IDEA). Copies of the new law may be obtained at the following Web site: *http://www.gpoaccess.gov/plaws/index.html.*

Enactment of the new law provides an opportunity to consider improvements in the regulations implementing the IDEA (including both formula and discretionary grant programs) that would strengthen the Federal effort to ensure every child with a disability has available a free appropriate public education that—

(1) Is of high quality, and

(2) Is designed to achieve the high standards reflected in the No Child Left Behind Act and regulations.

The Office of Special Education and Rehabilitative Services will be holding a series of informal meetings during the first few months of calendar year 2005 to seek input and suggestions for developing regulations, as needed, based on the Individuals with Disabilities Education Improvement Act of 2004.

This notice provides specific information about the first of these meetings, scheduled for Newark, DE (see *Date and Time of Public Meeting* earlier in this Notice). Other informal meetings will be conducted in the following locations:

- Atlanta, GA;
- Boston, MA;
- Columbus, OH;
- San Diego, CA;
- Laramie, WY; and
- Washington, DC.

In subsequent **Federal Register** notices, we will notify you of the specific dates and locations of each of these meetings, as well as other relevant information.

Individuals who need accommodations for a disability in order to attend the meeting (*i.e.*, interpreting services, assistive listening devices, and material in alternative format) should notify the contact person listed under **FOR FURTHER INFORMATION CONTACT.** The meeting location is accessible to individuals with disabilities.

Dated: January 7, 2005.

John H. Hager,

Assistant Secretary for Special Education and Rehabilitative Services.

[FR Doc. E5–119 Filed 1–12–05; 8:45 am]

BILLING CODE 4000–01–P

DEPARTMENT OF ENERGY

Office of Fossil Energy

Orders Granting Authority To Import and Export Natural Gas, Including the Import of Liquefied Natural Gas

In the matter of: 04–118–NG, 04–121–NG, 04–119–NG, 04–122–NG, 04–127–NG, 02–85–NG, 04–126–NG, 04–117–NG, 04–123–NG, 04–128–NG, 04–129–NG, 04–130–NG, 04–125–NG, 04–124–NG, 04–132–NG; Amerada Hess Corporation, Cascade Natural Gas Corporation, San Diego Gas & Electric Company, Keyspan Gas East Corporation, BP Energy Company, Keyspan Gas East Corporation, Bay State Gas Company, Engage Energy Canada, L.P., Nexen Marketing U.S.A. Inc., Termoelectria de Mexicali, S. de R.L. de C.V., Boss Energy, Ltd., Texas Eastern Transmission, LP, Boston Gas Company, Northern Utilities, Inc., Dominion Exploration Canada, Ltd.

AGENCY: Office of Fossil Energy, DOE.

ACTION: Notice of orders.

SUMMARY: The Office of Fossil Energy (FE) of the Department of Energy gives notice that during December 2004, it issued Orders granting authority to import and export natural gas, including the import of liquefied natural gas. These Orders are summarized in the attached appendix and may be found on the FE Web site at *http://www.fe.doe.gov* (select gas regulation). They are also available for inspection and copying in the Office of Natural Gas Regulatory Activities, Docket Room 3E–033, Forrestal Building, 1000 Independence Avenue, SW., Washington, DC 20585, (202) 586–9478. The Docket Room is open between the hours of 8 a.m. and 4:30 p.m., Monday through Friday, except Federal holidays.

Issued in Washington, DC, on January 5, 2005.

R.F. Corbin,

Manager, Natural Gas Regulatory Activities, Office of Oil and Gas Global Security and Supply, Office of Fossil Energy.

Appendix

[DOE/FE Authority]

Order No.	Date issued	Importer/exporter FE Docket No.	Import volume	Export volume	Comments
2050	12–2–04	Amerada Hess Corporation; 04–118–NG	100 Bcf	100 Bcf	Import and export natural gas from and to Canada beginning on January 1, 2005 and extending through December 31, 2006.
2052	12–6–04	San Diego Gas & Electric Company; 04–119–NG.	5 Bcf		Import and export a combined total of natural gas from and to Mexico, beginning on November 22, 2004, and extending through November 21, 2006.
2053	12–9–04	Keyspan Gas East Corporation; 04–122–NG.	25 Bcf		Import and export a combined total of natural gas from and to Canada, beginning on December 10, 2004, and extending through December 9, 2006.
2054	12–9–04	BP Energy Company; 04–127–NG	1,100 Bcf		Import and export a combined total of natural gas from and to Canada and Mexico, beginning on December 9, 2004, and extending through December 8, 2006.
1831–A	12–9–04	Keyspan as East Corporation; 02–85–NG			Vacate blanket import and export authority.
2055	12–9–04	Bay State Gas Company; 04–126–NG	60 Bcf		Import and export a combined total of natural gas from and to Canada, beginning on April 1, 2003, and extending through March 31, 2005.
2056	12–9–04	Engage Energy Canada, L.P.; 04–117–NG	1,000 Bcf		Import and export a combined total of natural gas from and to Canada, and import LNG from other international sources, beginning on January 1, 2005, and extending through December 31, 2006.
2057	12–9–04	Nexen Marketing U.S.A. Inc.; 04–123–NG	200 Bcf		Import and export a combined total of natural gas from and to Canada and Mexico, beginning on January 1, 2004, and extending through December 31, 2006.

[DOE/FE Authority]

Order No.	Date issued	Importer/exporter FE Docket No.	Import volume	Export volume	Comments
2058	12–21–04	Termoelectria de Mexicali, S. de R.L. de C.V.; 04–128–NG.	300 Bcf		Import and export a combined total of natural gas from and to Mexico, beginning on December 21, 2004, and extending through December 20, 2006.
2059	12–21–04	Boss Energy, Ltd.; 04–129–NG	10 Bcf; ..... 5 Bcf	10 Bcf; ..... 5 Bcf	Import and export natural gas from and to Canada and Mexico, beginning on December 21, 2004, and extending through December 20, 2006.
2060	12–21–04	Texas Eastern Transmission, L.P.; 04–130–NG.	2 Bcf		Import and export a combined total of natural gas from and to Mexico, beginning on December 17, 2004, and extending through December 16, 2006.
2061	12–22–06	Boston Gas Company; 04–125–NG	10 Bcf		Import and export a combined total of natural gas from and to Canada, beginning on December 22, 2004, and extending through December 21, 2006.
2062	12–22–04	Northern Utilities, Inc.; 04–124–NG	30 Bcf		Import and export a combined total of natural gas from and to Canada, beginning on January 15, 2005, and extending through January 14, 2007.
2063	12–30–04	Dominion Exploration Canada Ltd.; 04–132–NG.	25 Bcf		Import natural gas from Canada, beginning on December 30, 2004, and extending through December 29, 2006.

[FR Doc. 05–713 Filed 1–12–05; 8:45 am]
BILLING CODE 6450–01–P

ENVIRONMENTAL PROTECTION AGENCY

[OPPT–2004–0132; FRL–7694–6]

Response to Petition; Notice of Availability

AGENCY: Environmental Protection Agency (EPA).

ACTION: Notice.

SUMMARY: On October 5, 2004, EPA received a petition filed under section 21 of the Toxic Substances Control Act (TSCA) and section 553(e) of the Administrative Procedure Act from People for the Ethical Treatment of Animals (PETA). The Physicians Committee for Responsible Medicine (PCRM) joined the petition by a letter dated November 9, 2004. The petition requests that EPA revoke the TSCA developmental neurotoxicity test guideline codified at 40 CFR 799.9630 and withdraw a harmonized test guideline issued by the Office of Prevention, Pesticides and Toxic Substances (OPPTS) titled, ''Health Effects Test Guidelines: OPPTS 870.6300 Developmental Neurotoxicity Study'' (EPA–712–C–98–239). Although EPA believes the petitioners' requests are outside the scope of TSCA section 21, and thus the submission in its entirety is being treated as a petition under the Administrative Procedure Act, EPA responded to the petitioners within the 90–day timeframe established in TSCA for section 21 petitions. EPA has responded to the petition by denying these requests and is announcing the public availability of this response.

FOR FURTHER INFORMATION CONTACT: *For general information contact*: Colby Lintner, Regulatory Coordinator, Environmental Assistance Division (7408M), Office of Pollution Prevention and Toxics, Environmental Protection Agency, 1200 Pennsylvania Ave., NW., Washington, DC 20460–0001; telephone number: (202) 554–1404; e-mail address:*TSCA-Hotline@epa.gov.*

For technical information contact: Laura Bunte, Chemical Control Division (7405M), Office of Pollution Prevention and Toxics, Environmental Protection Agency, 1200 Pennsylvania Ave., NW., Washington, DC 20460–0001; telephone number: (202) 564–8157; e-mail address:*ccd.citb@epa.gov.*

SUPPLEMENTARY INFORMATION:

I. General Information

A. Does this Action Apply to Me?

This action is directed to the public in general, and may be of particular interest to those persons who are or may be required to conduct testing of chemical substances under the Toxic Substances Control Act (TSCA), the Federal Food, Drug, and Cosmetic Act (FFDCA), or the Federal Insecticide, Fungicide, and Rodenticide Act (FIFRA). Since other entities may also be interested, the Agency has not attempted to describe all the specific entities that may be interested in this action. If you have any questions regarding the applicability of this action to a particular entity, consult the technical contact person listed under **FOR FURTHER INFORMATION CONTACT**.

B. How Can I Get Copies of this Document and Other Related Information?

1. *Docket*. EPA has established an official public docket for this action under docket ID number OPPT–2004–0132. The official public docket consists of the documents specifically referenced in this action, including the petitioner's request, supporting information submitted by the petitioners, and EPA's response to the petition. Although a part of the official docket, the public docket does not include Confidential Business Information (CBI) or other information whose disclosure is restricted by statute. The official public docket is the collection of materials that is available for public viewing at the EPA Docket Center, Rm. B102-Reading Room, EPA West, 1301 Constitution Ave., NW., Washington, DC. The EPA Docket Center is open from 8:30 a.m. to 4:30 p.m., Monday through Friday, excluding legal holidays. The EPA Docket Center Reading Room telephone number is(202) 566–1744 and the telephone number for the OPPT Docket, which is

located in the EPA Docket Center, is (202) 566–0280.

2. *Electronic access*. You may access this **Federal Register** document electronically through the EPA Internet under the**Federal Register** listings at*http://www.epa.gov/fedrgstr/*. The documents referenced in Unit I.B.1 are also accessible through the EPA Internet at*http://www.epa.gov/opptintr/chemtest/dnt/index.htm*. To access the OPPTS Harmonized Test Guideline referenced in this document, go directly to the guideline at *http://www.epa.gov/opptsfrs/home/guidelin.htm/*.

In addition, an electronic version of the public docket is available through EPA's electronic public docket and comment system, EPA Dockets. You may use EPA Dockets at *http://www.epa.gov/edocket/* to access the index listing of the contents of the official public docket and to access those documents in the public docket that are available electronically. Although not all docket materials may be available electronically, you may still access any of the publicly available docket materials through the docket facility identified in Unit I.B.1. Once in the system, select ''search,'' then key in the appropriate docket ID number.

Certain types of information will not be placed in the EPA Dockets. Information claimed as CBI and other information whose disclosure is restricted by statute, which is not included in the official public docket, will not be available for public viewing in EPA's electronic public docket. EPA's policy is that copyrighted material will not be placed in EPA's electronic public docket but will be available only in printed, paper form in the official public docket. To the extent feasible, publicly available docket materials will be made available in EPA's electronic public docket. When a document is selected from the index list in EPA Dockets, the system will identify whether the document is available for viewing in EPA's electronic public docket. Although not all docket materials may be available electronically, you may still access any of the publicly available docket materials through the docket facility identified in Unit I.B.1. EPA intends to work towards providing electronic access to all of the publicly available docket materials through EPA's electronic public docket.

II. What Action is the Agency Taking?

This action announces the availability of EPA's response to the petition. The public may access both the petition and EPA's response as described in Unit I.B. of this document.

List of Subjects

Environmental protection, Pesticides, Toxic substances, Test guidelines.

Dated: January 3, 2005.

Susan B. Hazen,

Acting Assistant Administrator, Office of Prevention, Pesticides and Toxic Substances.

[FR Doc. 05–711 Filed 1–12–05 8:45 am]

BILLING CODE 6560–50–S

FARM CREDIT SYSTEM INSURANCE CORPORATION

Notice of Meeting

AGENCY: Farm Credit System Insurance Corporation Board; Regular Meeting.

SUMMARY: Notice is hereby given of the regular meeting of the Farm Credit System Insurance Corporation Board (Board).

DATE AND TIME: The meeting of the Board will be held at the offices of the Farm Credit Administration in McLean, Virginia, on January 13, 2005, from 10 a.m. until such time as the Board concludes its business.

FOR FURTHER INFORMATION CONTACT: Jeanette C. Brinkley, Secretary to the Farm Credit System Insurance Corporation Board, (703) 883–4009, TTY (703) 883–4056.

ADDRESSES: Farm Credit System Insurance Corporation, 1501 Farm Credit Drive, McLean, Virginia 22102.

SUPPLEMENTARY INFORMATION: This meeting of the Board will be open to the public (limited space available. In order to increase the accessibility to Board meetings, persons requiring assistance should make arrangements in advance. The matters to be considered at the meeting are:

Open Session

A. Approval of Minutes

- December 2, 2004 (Regular Meeting)

New Business

- Review of Insurance Premium Rates

Dated: January 7, 2005.

Jeanette C. Brinkley,

Secretary, Farm Credit System Insurance Corporation Board.

[FR Doc. 05–686 Filed 1–12–05; 8:45 am]

BILLING CODE 6710–01–P

FEDERAL COMMUNICATIONS COMMISSION

Notice of Public Information Collection(s) Being Reviewed by the Federal Communications Commission for Extension Under Delegated Authority

January 6, 2005.

SUMMARY: The Federal Communications Commission, as part of its continuing effort to reduce paperwork burden invites the general public and other Federal agencies to take this opportunity to comment on the following information collection(s), as required by the Paperwork Reduction Act (PRA) of 1995, Public Law No. 104–13. An agency may not conduct or sponsor a collection of information unless it displays a currently valid control number. No person shall be subject to any penalty for failing to comply with a collection of information subject to the Paperwork Reduction Act that does not display a valid control number. Comments are requested concerning (a) whether the proposed collection of information is necessary for the propeer performance of the functions of the Commission, including whether the information shall have practical utility; (b) the accuracy of the Commission's burden estimate; (c) ways to enhance the quality, utility, and clarity of the information collected; and (d) ways to minimize the burden of the collection of information on the respondents, including the use of automated collection techniques or other forms of information technology.

DATES: Written Paperwork Reduction Act (PRA) comments should be submitted on or before March 14, 2005. If you anticipate that you will be submitting comments, but find it difficult to do so within the period of time allowed by this notice, you should advise the contact listed below as soon as possible.

ADDRESSES: Direct all Paperwork Reduction Act (PRA) comments to Cathy Williams, Federal Communications Commission, Room 1–C823, 445 12th Street, SW., Washington, DC 20554 or via the Internet to *Cathy.Williams@fcc.gov*.

FOR FURTHER INFORMATION CONTACT: For additional information or copies of the information collection(s), contract Cathy Williams at (202) 418–2918 or via the Internet at *Cathy.Williams@fcc.gov*.

SUPPLEMENTARY INFORMATION:

OMB Control Number: 3060–0996.

Title: AM Auction Section 307(b) Submissions.

Form Number: Not applicable.

Type of Review: Extension of a currently approved collection.

Respondents: Business or other for-profit entities.

Number of Respondents: 450.

Estimated Time Per Response: 0.5–3 hours.

Frequency of Response: On occasion reporting requirement.

Total Annual Burden: 1,100 hours.

Total Annual Cost: $132,500.

Privacy Impact Assessment: No impact(s).

Needs and Uses: Section 307(b) of the Communications Act, as amended, requires that the Commission effect a fair, efficient and equitable distribution of radio stations throughout the United States. In the context of competitive bidding application processing, Section 307(b) is relevant when a mutually exclusive AM application group consists of applications to serve different communities, or when a non-mutually exclusive AM application proposes a community of license change. Such applications must submit supplemental information addressing Section 307(b) criteria. The data submitted will be used to determine the community having the greater need for an AM radio service.

Federal Communications Commission.

Marlene H. Dortch,

Secretary.

[FR Doc. 05–653 Filed 1–12–05; 8:45 am]

BILLING CODE 6712–10–M

FEDERAL COMMUNICATIONS COMMISSION

[CC Docket No. 94–102; DA 04–3874]

State Actions To Achieve Effective Deployment of E911 Capabilities for Multi-Line Telephone Systems (MLTSs)

AGENCY: Federal Communications Commission.

ACTION: Notice; solicitation of comments.

SUMMARY: This document solicits comments about the progress made by the states in implementing E911 solutions for multi-line telephone systems (MLTSs). The Commission committed to releasing a public notice on this issue in its previous documents that revised the scope of the enhanced 911 rules to clarify which technologies and services will be required to be capable of transmitting enhanced 911 information to Public Safety Answering Points (PSAPs).

DATES: Comments are due on or before February 28, 2005. Reply comments are due on or before March 29, 2005.

ADDRESSES: Federal Communications Commission, 445 12th Street SW., Washington DC 20554. *See* **SUPPLEMENTARY INFORMATION** for further filing instructions.

FOR FURTHER INFORMATION CONTACT: Contact Michael Goldstein, Wireline Competition Bureau, (202) 418–0806, *michael.goldstein@fcc.gov;* or Cathy Zima, Wireline Competition Bureau, (202) 418–7380, *cathy.zima@fcc.gov.* Users of TTY equipment, call (202) 418–0484.

SUPPLEMENTARY INFORMATION: This public notice solicits comment about the progress made by the states in implementing E911 solutions for multi-line telephone systems (MLTSs). When an emergency (*i.e.*, 911) call is placed from a station served by an MLTS, the Public Safety Answering Point (PSAP) receiving the call will not always be able to identify the office, dormitory room or other detailed location of the caller. This problem is well known and has been a subject of several Commission proceedings. In its *Report and Order and Second Further Notice of Proposed Rulemaking,* Final rule; 69 FR 6578, February 11, 2004, and Proposed rule; 69 FR 6595, February 11, 2004, the Commission was concerned that ''the lack of effective implementation of MLTS E911 could be an unacceptable gap in the emergency call system'' but declined to adopt federal rules to address this issue, because the record demonstrated that state and local governments are in a better position to devise such rules for their jurisdictions. Expecting the ''states to act expeditiously in this area,'' the Commission committed to releasing a public notice in a year to examine states' progress and announced its intention to re-visit the E911-MLTS/caller location issue depending on the results of its evaluation of state action.

Status of State Action

Public sources indicate that approximately twelve states have adopted legislation addressing E911 requirements for MLTSs. These same sources indicate that some state regulatory commissions have promulgated regulations addressing these requirements. We seek public comment about state-adopted statutes and regulations, as well as about proposals for action in this area that may be currently under consideration and the anticipated time frames for conclusion of such proposals. We specifically ask commenters to identify and discuss state actions that may be based on model legislation such as that proposed by the National Emergency Number Association (NENA) and the Association of Public-Safety Communications Officials (APCO).

More specifically, we ask commenters to identify and discuss relevant state activity by: (1) Specific identification (citation) to a particular statute or regulation, or proposed statute or regulation, in each case; (2) identification of any corresponding state Web page where these activities are presented or discussed; (3) identification of the date any final legislative or regulatory action became effective or is expected to become effective; (4) discussion of any requirements placed on carriers, MLTS equipment manufacturers, MLTS operators, or any other persons; and (5) discussion of how the statute and/or regulation is enforced.

With regard to (4), commenters should note whether any entities are specifically exempted from adopted requirements imposed by the legislation or regulations and explain the criteria for exemption. To the extent legislation or regulation was proposed but not ultimately adopted, we invite parties to explain why such action was not taken, such as cost concerns, technical complexity, and the perceived lack of demand or need for the proposed requirements.

Use of Model Legislation

The Commission's *Report and Order and Second Further Notice of Proposed Rulemaking* states: ''we believe that the Model Legislation submitted by NENA and APCO offers the states a valuable blueprint for their own laws,'' and ''we strongly support the approach taken by the model legislation.'' With this view of the model legislation, we request information regarding how it has affected efforts by the states to produce their own statutes. In particular, please describe how this model legislation has been used in determining states' approaches, how extensively this model legislation has been and is being used, and its perceived shortcomings.

In addition to use of this particular model legislation, we invite comment as to whether there are any other models that states have found useful in developing legislation, *e.g.*, laws passed in any other state. We ask commenters to identify such examples and analyze their possible utility for widespread use.

Carrier Services Provided Under State Tariff

Although our primary focus is evaluating state action addressing E911/MLTS issues, we also seek comment on the extent to which carriers and others offer E911 solutions for MLTSs. It

appears that at least one carrier is providing E911 service for MLTSs under tariff in at least one state, and that carrier works with individual MLTS operators elsewhere within its footprint to implement customer-specific solutions if such are economically and technically feasible. We seek comment regarding the availability of E911/MLTS services offered under tariff or otherwise both in states that have passed E911/MLTS legislation or adopted E911/MLTS regulations and in states that have not. In particular, where these services are offered absent state legislative or regulatory action, we seek comment regarding the reasons the services were developed.

Specifically, commenters should (1) identify the carrier and the state or states in which that carrier offers or plans to offer E911 service for MLTSs; (2) provide links to the carrier's published tariffs, and identify the effective dates of those tariffs, where applicable; (3) identify the salient technical features of each service offered under tariff, including but not limited to which MLTS technologies are supported (*e.g.*, Centrex, analog PBX, ISDN PBX, non-ISDN digital PBX, IP–PBX, or key system), which E911 MLTS-to-network technical interface standards or other specifications are supported (*e.g.*, CAMA or Primary Rate Access (PRA) ISDN), and any special requirements regarding trunking arrangements or the use of Direct Inward Dial (DID) numbers; (4) identify salient operational characteristics of the service; (5) identify the Automatic Location Identification (ALI) database interface options and costs for MLTS operators, the procedural impacts on MLTS operators, and the ALI database interface standards or specifications supported; (6) indicate whether PSAPs generally have been able to receive and utilize the ALI and call-back information provided and, if not, why not; (7) estimate the degree to which the offerings satisfy or cover the MLTS market; and (8) identify real or perceived technical, economic, operational and other impediments to full E911 coverage for MLTSs.

Where specific technical features are required by state legislation or regulation, we ask that commenters identify those features. For those states where E911/MLTS service is provided under customer-specific arrangements, such as individual case basis (ICB) arrangements, we ask that commenters present and discuss all relevant information to allow us to characterize the available technical features. In each case, commenters should be sufficiently complete and specific in their descriptions of requirements and references to standards to enable us to develop a comprehensive picture of commonalities and differences in E911/MLTS implementation across the states.

Comment Filing Procedures

Pursuant to §§ 1.415 and 1.419 of the Commission's rules, interested parties may file comments on or before February 28, 2005. Reply comments are due on or before March 29, 2005. Comments may be filed using the Commission's Electronic Comment Filing System (ECFS) or by filing paper copies. *See Electronic Filing of Documents in Rulemaking Proceedings,* 63 FR 24121, May 1, 1998. When filing comments, please reference CC Docket No. 94–102. Comments may be filed electronically using the Internet by accessing the ECFS at *http://www.fcc.gov/cgb/ecfs/* and following the instructions provided on the Web site. Generally, only one copy of an electronic submission must be filed. In completing the transmittal screen, commenters should include their full name, U.S. Postal Service mailing address, and the applicable docket number. Parties may also submit an electronic comment by Internet e-mail. To get filing instructions for e-mail comments, commenters should send an e-mail to *ecfs@fcc.gov,* and should include the following words in the body of the message, ''get form <your email address.'' A sample form and directions will be sent in reply.

Parties who choose to file by paper must file an original and four copies of each filing. Filings can be sent by hand or messenger delivery, by commercial overnight courier, or by first-class or overnight U.S. Postal Service mail (although we continue to experience delays in receiving U.S. Postal Service mail). The Commission's contractor, Natek, Inc., will receive hand-delivered or messenger-delivered paper filings for the Commission's Secretary at 236 Massachusetts Avenue, NE., Suite 110, Washington, DC 20002. The filing hours at this location are 8 a.m. to 7 p.m. All hand deliveries must be held together with rubber bands or fasteners. Any envelopes must be disposed of *before* entering the building. Commercial overnight mail (other than U.S. Postal Service Express Mail and Priority Mail) must be sent to 9300 East Hampton Drive, Capitol Heights, MD 20743. U.S. Postal Service first-class mail, Express Mail, and Priority Mail should be addressed to 445 12th Street, SW., Washington, DC 20554. All filings must be addressed to the Commission's Secretary, Office of the Secretary, Federal Communications Commission. One copy of each filing must be sent to Best Copy and Printing, Inc., Portals II, 445 12th Street, SW., Room CY–B402, Washington, DC 20554, telephone 1–800–378–3160, or online at *http://www.bcpiweb.com.*

Parties who choose to file by paper must also send three paper copies of their filing to the attention of Michael Goldstein, Industry Analysis and Technology Division, Wireline Competition Bureau, Federal Communications Commission, 445 12th Street, SW., Room 5–A422, Washington, DC 20554.

Pursuant to § 1.1206 of the Commission's rules, 47 CFR 1.1206, this proceeding will continue to be conducted as a permit-but-disclose proceeding in which *ex parte* communications are permitted subject to disclosure.

Federal Communications Commission.

Cathy H. Zima,

Acting Deputy Chief, Industry Analysis and Technology Division.

[FR Doc. 05–652 Filed 1–12–05; 8:45 am]

BILLING CODE 6712–01–P

FEDERAL ELECTION COMMISSION

Sunshine Act Notices

* * * * *

PREVIOUSLY ANNOUNCED DATE AND TIME: Thursday, January 13, 2005, 10 a.m. meeting open to the public. This meeting has been cancelled.

* * * * *

FOR FURTHER INFORMATION CONTACT: Mr. Robert Biersack, Press Officer, Telephone: (202) 694–1220.

Mary W. Dove,

Secretary of the Commission.

[FR Doc. 05–812 Filed 1–11–05; 11:21 am]

BILLING CODE 6715–01–M

FEDERAL RESERVE SYSTEM

Notice of Proposals to Engage in Permissible Nonbanking Activities or to Acquire Companies that are Engaged in Permissible Nonbanking Activities

The companies listed in this notice have given notice under section 4 of the Bank Holding Company Act (12 U.S.C. 1843) (BHC Act) and Regulation Y (12 CFR Part 225) to engage *de novo*, or to acquire or control voting securities or assets of a company, including the companies listed below, that engages either directly or through a subsidiary or other company, in a nonbanking activity that is listed in § 225.28 of Regulation Y

(12 CFR 225.28) or that the Board has determined by Order to be closely related to banking and permissible for bank holding companies. Unless otherwise noted, these activities will be conducted throughout the United States.

Each notice is available for inspection at the Federal Reserve Bank indicated. The notice also will be available for inspection at the offices of the Board of Governors. Interested persons may express their views in writing on the question whether the proposal complies with the standards of section 4 of the BHC Act. Additional information on all bank holding companies may be obtained from the National Information Center website at www.ffiec.gov/nic/.

Unless otherwise noted, comments regarding the applications must be received at the Reserve Bank indicated or the offices of the Board of Governors not later than February 7, 2005.

A. Federal Reserve Bank of New York (Jay Bernstein, Bank Supervision Officer) 33 Liberty Street, New York, New York 10045–0001:

1. First BanCorp, San Juan, Puerto Rico; to acquire 100 percent of the voting shares of Ponce General Corporation, San Juan, Puerto Rico, and thereby indirectly acquire UniBank, Miami, Florida, and thereby engage in operating a savings association pursuant to section 225.28(b)(4) of Regulation Y.

Board of Governors of the Federal Reserve System, January 7, 2005.

Robert deV. Frierson,

Deputy Secretary of the Board.

[FR Doc. 05–677 Filed 1–12–05; 8:45 am]

BILLING CODE 6210–01–S

OFFICE OF GOVERNMENT ETHICS

Study Evaluating, and Making Recommendations for Improving, the Financial Disclosure Process for Employees of the Executive Branch; Opportunity for Comment

AGENCY: Office of Government Ethics (OGE).

ACTION: Notice.

SUMMARY: The Office of Government Ethics is conducting a study, pursuant to the Intelligence Reform and Terrorism Prevention Act of 2004, to evaluate and recommend improvements to the public financial disclosure process for employees of the executive branch. This notice indicates the pendency of OGE's study and provides the public and agencies the opportunity to comment.

DATES: Any comments from the public and the agencies must be received by February 11, 2005.

ADDRESSES: You may submit comments to OGE on the study by any of the following methods:

- E-mail: *usoge@oge.gov.* For E-mail messages, the subject line should include the following reference: ''Comments Regarding Financial Disclosure Process Study.''
- FAX: 202–482–9237.
- Mail, Hand Delivery or Courier: Office of Government Ethics, Suite 500, 1201 New York Avenue, NW., Washington, DC 20005–3917, Attention: Ira S. Kaye, Associate General Counsel.

FOR FURTHER INFORMATION CONTACT: Ira S. Kaye, Associate General Counsel, Office of Government Ethics, telephone: 202–482–9300; TDD: 202–482–9293; FAX: 202–482–9237.

SUPPLEMENTARY INFORMATION: Section 8403 of the Intelligence Reform and Terrorism Prevention Act of 2004, Public Law 108–458 (December 17, 2004), directs the Office of Government Ethics to provide a report to Congress, within 90 days, evaluating the financial disclosure process for employees of the executive branch, and recommending improvements to it. In order to comply with this mandate, OGE has undertaken a study of this subject. OGE's report will focus on whether to recommend amending the body of information that is statutorily required to be included on the Standard Form (SF) 278 Executive Branch Personnel Public Financial Disclosure Report, as well as whether to recommend changes to the public financial disclosure system itself. Specifically, OGE will analyze whether to recommend changing: the number of asset, income, transaction and liability valuation categories; the various reporting time periods; the dollar thresholds for reporting particular assets, income, transactions and liabilities; the requirements to report most transactions, to identify the type of income earned, and to report the actual dollar amounts of particular types of income; and the level of description and detail required, particularly on Schedules C (liabilities and agreements or arrangements) and D (outside positions and compensation over $5,000) of the SF 278 report form.

As part of its consideration of these important matters, OGE believes it would be both appropriate and helpful to give the public and agencies an opportunity to express their views. Interested persons may submit comments to OGE, to be received by February 11, 2005, regarding any specific part of the financial disclosure process study or just to give general views on the study in order to assist OGE.

Approved: January 7, 2005.

Marilyn L. Glynn,

Acting Director, Office of Government Ethics.

[FR Doc. 05–710 Filed 1–12–05; 8:45 am]

BILLING CODE 6345–02–P

DEPARTMENT OF HEALTH AND HUMAN SERVICES

Centers for Disease Control and Prevention

[Program Announcement Open Season 02060–FY05]

National Cancer Prevention and Control Program; Notice of Availability of Open Season Funds

LOI Deadline: January 28, 2005.

Application Deadline: February 28, 2005.

A. Purpose

The Centers for Disease Control and Prevention (CDC) announces the availability of fiscal year (FY) 2005 funds for an Open Season for the National Cancer Prevention and Control Program (NCPCP) cooperative agreement program previously announced under Program Announcement 02060 (Henceforth referred to as ''PA 02060''). This program addresses the ''Healthy People 2010'' focus area(s) related to cancer.

PA02060 was published in the **Federal Register** on April 23, 2002, Volume 67, Number 78, pages 19932–19950. Amendment 1 was published May 23, 2002, Amendment 2 was published January 2, 2003, and Amendment 3 was published on January 20, 2004. Applicants may access the amended version of PA 02060, along with this Open Season announcement, on the CDC Web site, Internet address: *http://www.cdc.gov.* Click on ''Funding,'' then ''Grants and Cooperative Agreements.''

Sections A.–F. of original PA 02060 are superceded by the Sections A.–F. published in this announcement.

The NCPCP will assist States/District of Columbia/Tribes/Territories in developing, implementing, maintaining, enhancing, integrating, and evaluating a cancer program inclusive of cancer surveillance, prevention and early detection programs, and which focuses on eliminating health disparities. The purpose of each of the three programmatic components within the NCPCP follows.

A.1. National Comprehensive Cancer Control Programs (NCCCP)

The NCCCP component supports the planning and implementation of

comprehensive cancer control activities. CDC defines comprehensive cancer control as an integrated and coordinated approach to reduce the incidence, morbidity and mortality of cancer through prevention, early detection, treatment, rehabilitation, and palliation.

A.2. National Breast and Cervical Cancer Early Detection Program (NBCCEDP)

The NBCCEDP component supports the development of systems to assure breast and cervical cancer screening for low income, underserved, and uninsured women with special emphasis on reaching those who are geographically or culturally isolated, older, or members of racial/ethnic minorities. Components of the NBCCEDP include program management; screening & diagnostic services, to include case management, tracking and follow-up; data management; quality assurance/quality improvement; evaluation; partnerships; professional development and recruitment, to include public education, outreach and inreach. These components are carried out at the local, State and national levels through collaborative partnerships with State health agencies, community-based organizations, tribal governments, universities, a variety of medical care providers and related agencies and institutions, and the business and voluntary sectors. These partners work together to develop, implement and evaluate strategies to promote breast and cervical cancer prevention and early detection, to increase access to related services and to improve the quality and timeliness of the services.

A.3. National Program of Cancer Registries (NPCR)

The NPCR component supports efforts to establish population-based cancer registries where they do not exist and to improve existing cancer registries.

PA 02060 and applicable amendments, contain information that is specific to the three individual components. Section G ''Specific Guidance for NCCCP'' addresses the National Comprehensive Cancer Control Program; Section H ''Specific Guidance for NCCEDP'' addresses the National Breast and Cervical Cancer Early Detection Program; and Section I ''Specific Guidance for NPCR'' addresses the National Program of Cancer Registries. These component sections include specific guidance regarding:

- Eligibility
- Program Requirements
- Content
- Other Requirements
- Evaluation Criteria

Please refer to these specific component sections in PA 02060, and amendments for information.

Special Guidelines for Technical Assistance

Conference Call: Technical assistance will be available for potential applicants on a conference call that will be held on January 19, 2005, from 3:30 p.m. to 5:30 p.m. (Eastern time). Potential applicants are requested to call in using only one telephone line. The conference can be accessed by calling 1–888–576–9873, and entering the passcode 21028.

The purpose of the conference call is to help potential applicants to:

1. Understand the process for the Open Season Announcement for PA 02060 for the National Cancer Prevention and Control Program;
2. Understand the scope and intent of PA 02060 for the National Cancer Prevention and Control Program;
3. Be familiar with the Public Health Services funding policies and application and review procedures.

Participation in this conference call is not mandatory. At the time of the call, if you have problems accessing the conference call, please call 404–639–7550.

B. Eligible Applicants

Applicants may apply for any or all of the components within this Open Season announcement for which they are eligible and that they are not currently funded for under PA 02060.

B.1. Eligible for NCCCP

Potential applicants that are eligible for components of NCCCP are the health departments of States or their bona fide agents, the Commonwealth of Puerto Rico, the Virgin Islands, the Commonwealth of the Northern Mariana Islands, American Samoa, Guam, the Federated States of Micronesia, the Republic of the Marshall Islands, and Federally recognized Indian Tribal governments and Tribal organizations, urban Indian organizations and inter-tribal consortia (hereafter referred to as Tribes) whose primary purpose is to improve American Indian/Alaska Native health and which represent the Native population in their catchment area, that are not currently funded for NCCCP under PA 02060.

B.2. Eligible for NBCCEP

Potential applicants that are eligible for NBCCEDP are the Virgin Islands, the Commonwealth of the Northern Mariana Islands, the Federated States of Micronesia, the Republic of the Marshall Islands, and Federally recognized Indian Tribal governments and Tribal organizations, urban Indian organizations and inter-tribal consortia (hereafter referred to as Tribes) whose primary purpose is to improve American Indian/Alaska Native health and which represent the Native population in their catchment area, that are not currently funded for NBCCEDP under PA 02060.

B.3. Eligible for NPCR

Potential applicants that are eligible for components of NPCR are the health departments of States or their bona fide agents, the Commonwealth of the Northern Mariana Islands, American Samoa, Guam, the Federated States of Micronesia, the Republic of the Marshall Islands, and academic or nonprofit organizations designated by a State to operate the State's cancer registry, that are not currently funded under PA 02060.

Note: Title 2 of the United States Code section 1611 states that an organization described in section 501(c)(4) of the Internal Revenue Code that engages in lobbying activities is not eligible to receive Federal funds constituting an award, grant or loan.

C. Availability of Funds

Pending availability of FY 2005 funds, approximately $1,850,000 is available in FY 2005 to fund new programs under the Open Season for PA 02060-FY05.

Awards under PA 02060 were made for a Project Period of September 30, 2002 through June 29, 2007. The first funding period was for the period September 30, 2002 through June 29, 2003. The second funding period was for the period June 30, 2003 through June 29, 2004. The third funding period was for the period June 30, 2004 through June 29, 2005. Awards under this Open Season announcement will be for the Period of June 30, 2005 through June 29, 2007, with funding for the period June 30, 2005 through June 29, 2006. Future budget periods will be 12-month periods, and will begin on June 30 of every year and run through June 29 of each following year. These budget periods will occur until the expiration of the project period for PA 02060, which is June 29, 2007.

In Accordance with G.2.d. of PA 2060, Amendment 4, there will be no funding preferences applicable to this funding period.

All new applications will be reviewed through an Objective Review process.

C.1. Component Funding

NCCCP $250,000
NBCCEDP $0 (No Open Season Funds Available for FY05)

NPCR $250,000

NCCCP—Additional Optional Funding available for recipients of NCCCP Implementation Programs as follows:

Colorectal cancer activities $250,000
Ovarian cancer activities $500,000
Prostate cancer activities $500,000
Skin cancer activities $100,000

C.2. Requested Budget Information

Applicants should submit separate budgets for each component (as well as separate budgets if applying for the Additional Optional Funding under NCCCP) in response to this Open Season announcement. Each detailed budget and narrative justification should support the activities for the funding period specified in this Program Announcement for FY 2005 support.

Applications should follow the guidance provided under each program component in PA 02060 and applicable amendments, with respect to the development and submission of an itemized budget and justification.

C.3. Use of Funds

For specific ''Use of Funds'' information, refer to Sections G, H, and I of PA 02060 and amendments.

Cooperative agreement funds may be used to support personnel and to purchase equipment, supplies, and services directly related to project activities and consistent with the scope of the cooperative agreement.

Funds provided under this program announcement may not be used to:

• Conduct research projects. Guidance regarding CDC's definition of ''research'' should be reviewed at *http://www.cdc.gov/od/ads/opspoll1.htm.*

• Supplant State or local funds, to provide inpatient care or treatment, or to support the construction or renovation of facilities.

Applicants are encouraged to identify and leverage mutually beneficial opportunities to interact and integrate with other State health department programs that address related chronic diseases or risk factors. This may include cost sharing to support a shared position such as a Chronic Disease Epidemiologist, Health Communication Specialist, Program Evaluator, or Policy Analyst to work on relevant activities across units/departments within the State health department. Such activities may include, but are not limited to joint planning, joint funding of complementary activities, public health education, collaborative development and implementation of environmental, policy, systems, or community interventions and other cost sharing activities.

C.4. Recipient Financial Participation

For specific ''Recipient Financial Participation'' information, please refer to Sections G, H, and I of PA 02060 and amendments.

C.5. Direct Assistance

For specific ''Direct Assistance'' information, please refer to Sections G, H, and I of PA 02060 and amendments.

C.6. Funding Preferences

In accordance with the ''Funding Preference'' section of the amended PA 02060, no funding preference will be given for this period. For specific ''Funding Preference'' information, please refer to Sections G, H, and I of PA 02060 and amendments.

C.7. Funding Consideration

For specific ''Funding Consideration'' information, please refer to Sections G, H, and I of PA 02060 and amendments.

D. Content

D.1. Letter of Intent

One Letter of Intent (LOI) is requested from each applicant applying for any component(s) of this program. The narrative should be no more than one single-spaced page, printed on one side, with one-inch margins, and unreduced font. Your LOI will not be evaluated, but will be used to assist CDC in planning for the objective review for this program and should include the announcement number, the specific component(s) and parts of the component, if applicable, for which funds are being applied, and the name of the principal investigator.

D.2. Application Development

Please refer to Sections G, H, and I of PA 02060 and amendments to use the information in the Program Requirements, Other Requirements, and Evaluation Criteria sections to develop the application content. Your application will be evaluated using the criteria listed, so it is important to follow them in laying out your application.

Applications should follow the guidance below with respect to page limitations for each component. All applications should be printed on one side, with one-inch margins, using unreduced font. All materials must be provided in an unbound, one-sided, 8½ x 11″ print format, suitable for photocopying (*i.e.*, no audiovisual materials, posters, tapes, etc.).

D.3. Page Limitations

For specific ''Page Limitations'' information, please see Sections G, H, and I of PA 02060 and amendments.

D.4. Application Outline

Applicants may apply for any or all of the components within this program announcement for which they are eligible. Please provide specific ''Application Outline'' information for each component as outlined in specific Sections G, H, and I of PA 02060 and amendments.

E. Submission and Deadline

E1. Letter of Intent

On or before January 28, 2004, submit the LOI to the National Center for Chronic Disease Prevention and Control.

By mail: Tanya Hicks, Program Analyst, CDC National Center for Chronic Disease Prevention and Health Promotion, 4770 Buford Hwy, NE, MS K–57, Atlanta, GA 30341–3717; or by courier service: Tanya Hicks, Koger Center, 2858 Woodcock Blvd, Davidson Bldg, Room 2081, Chamblee, GA 30341; or by fax: 770–488–3230; or by e-mail: *Thicks@cdc.gov.*

E.2. Application

Submit the original and two copies of CDC Form 0.1246. Forms are available in the application kit and at the following Internet address: *www.cdc.gov/od/pgo/forminfo.htm.*

On or before February 28, 2005, submit the original and two copies of the application to: Technical Information Management—PA02060FY05, Procurement and Grants Office, Centers for Disease Control and Prevention, 2920 Brandywine Road, Atlanta, GA 30341–4146.

Applications may not be submitted electronically at this time.

Please reference Program Announcement Number 02060–FY05 National Cancer Prevention and Control Program on the mailing envelope and on the application Standard Form 424, block 11. Please also make sure that block 16 on Standard Form 424 regarding Executive Order 12372 has been completed correctly.

E.3. Deadline

Applications must be received in the CDC Procurement and Grants Office by 4 p.m. Eastern time on the deadline date. If you send your application by the United States Postal Service of commercial delivery service, you must ensure that the carrier will be able to guarantee delivery of the application by the closing date and time. If CDC receives your application after closing due to: (1) Carrier error, when the carrier accepted the package with a guarantee for delivery by the closing date and time, or (2) significant weather delays or natural disasters, you will be

given the opportunity to submit documentation of the carriers guarantee. If the documentation verifies a carrier problem, CDC will consider the application as having been received by the deadline.

CDC will not notify you upon receipt of your application. If you have a question about the receipt of your application, first contact your courier. If you still have a question, contact the PGO–TIM staff at: 770–488–2700. Before calling, please wait two to three days after the application deadline. This will allow time for the applications to be processed and logged.

F. Evaluation Criteria

Each application will be evaluated individually will be reviewed through an Objective Review process.

For specific ''Evaluation Criteria'' information, please see Sections G, H, and I of PA 02060 and amendments.

G. Where To Obtain Additional Information

This and other CDC announcements can be found on the CDC home page Internet address—*http://www.cdc.gov.* Click on ''Funding'' then ''Grants and Cooperative Agreements.''

If you have questions after reviewing the contents of all the documents, business management technical assistance in the states may be obtained from: Annie Camacho or Glynnis Taylor, Grants Management Specialist, CDC Procurement and Grants Office, 2920 Brandywine Road, Atlanta, GA 30341–4146, Telephone number: Annie Camacho: 770–488–2735, Glynnis Taylor: 770–488–2752, E-mail address: Annie Camacho: *atc4@cdc.gov,* Glynnis Taylor: *gld1@cdc.gov.*

Business management technical assistance in the territories may be obtained from: Vincent Falzone, Grants Management Specialist, CDC Procurement and Grants Office, 2920 Brandywine Road, Atlanta, GA 30341–4146, Telephone number: 770–488–2763, E-mail address: *vcf6@cdc.gov.*

For program technical assistance contact:

NCCCP: Leslie S. Given, M.P.A., Public Health Advisor, NCCCP, Program Services Branch, Division of Cancer Prevention and Control, National Center for Chronic Disease Prevention and Health Promotion, Centers for Disease Control and Prevention, 4770 Buford Hwy., NE (MS K–57), Atlanta, GA 30341–3717, Telephone number: 770–488–3099, E-mail address: *llg5@cdc.gov.*

NBCCEDP: Susan True, M.Ed., Branch Chief, Program Services Branch, Division of Cancer Prevention and Control, National Center for Chronic Disease Prevention and Health Promotion, Centers for Disease Control and Prevention, 4770 Buford Hwy., NE (MS K–57), Atlanta, GA 30341–3717, Telephone number: 770–488–4880, E-mail address: *smt7@cdc.gov.*

NPCR: Lois Voelker, Public Health Advisor, Cancer Surveillance Branch, Division of Cancer Prevention and Control, National Center for Chronic Disease Prevention and Health Promotion, Centers for Disease Control and Prevention, 4770 Buford Hwy., NE (MS K–53), Atlanta, GA 30341–3717, Telephone number: 770–488–3095, E-mail address: *lvoelker@cdc.gov.*

Dated: January 5, 2005.

William P. Nichols,

Acting Director, Procurement and Grants Office, Centers for Disease Control and Prevention.

[FR Doc. 05–488 Filed 1–12–05; 8:45 am]

BILLING CODE 4163–18–P

DEPARTMENT OF HEALTH AND HUMAN SERVICES

Administration for Children and Families

Submission for OMB Review; Comment Request

Title: Fourth National Incidence Study of Child Abuse and Neglect.

OMB No.: 0970–0276.

Description: The Department of Health and Human Services (HHS) intends to issue letters to recruit agencies for participation in the next National Incidence Study of Child Abuse and Neglect (NIS). This will be the fourth cycle of this periodic study. NIS–1, mandated under Public Law (Pub. L.) 93–247 (1974), was conducted in 1979 and 1980 and reported in 1981. NIS–2 was mandated under Pub. L. 98–457 (1984), conducted in 1986 and 1987 and reported in 1988. NIS–3 was mandated under both the Child Abuse Prevention, Adoption, and Family Services Act of 1988 (Pub. L. 100–294) and the Child Abuse, Domestic Violence, Adoption and Family Services Act of 1992 (Pub. L. 102–295), was conducted between 1993 and 1995 and published in 1996. NIS–4, mandated by the Keeping Children and Families Safe Act of 2003 (Pub. L. 108–36), will be reported in 2006.

NIS is unique in that it goes beyond the abused and neglected children who come to the attention of the Child Protective Services (CPS) system. In contrast to the National Child Abuse and Neglect Data Systems (NCANDS), which rely solely on reported cases, the NIS design assumes that reported children represent only a portion of the children who actually are maltreated. Following the implications of its assumptions, NIS estimates the scope of the maltreated child population by combining information about reported cases with data on maltreated children identified by professionals (called ''sentinels'') who encounter them during the normal course of their work in a wide range of agencies in representative communities. Sentinels are asked to remain on the lookout for children they believe are maltreated during the study reference period and to provide information about those children. Children identified by sentinels and those whose alleged maltreatment is investigated by CPS during the same period are evaluated against standardized definitions, and only children who meet the study standards are used to develop the study estimates. The study estimates are couched in terms of numbers of maltreated children, with data unduplicated so a given child is counted only once. Confidentiality of all participants is carefully protected.

A nationally representative sample of 120 counties will be selected and all local CPS agencies serving the selected counties will be identified. Plans will be developed to obtain data on cases investigated during the study reference period, September 4 to December 3, 2005. Sentinels in the selected counties will be identified through samples of agencies in 11 categories: county juvenile probation departments, sheriff (and/or state police) departments, public health departments, public housing departments, municipal police departments, hospitals, schools, day care centers, social service agencies, mental health agencies, and shelters for battered women or runaway/homeless youth. A total of approximately 1,600 sentinel agencies will be sampled. Plans will be developed to identify staff in these agencies who have direct contact with children to serve as sentinels during the study by submitting data on maltreated children they encounter during the study reference period. In preparation for the study, letters will be sent to the directors of the selected agencies asking them to permit their agencies to participate in NIS–4, and describing the general nature of the data collection effort. HHS will issue a subsequent notice of proposed data collection for this study after data collection plans are developed.

Respondents: National CPS Agencies and National Sentinel Agencies.

ANNUAL BURDEN ESTIMATES

Instrument	Number of respondents	Number of responses per respondent	Average burden hours per response	Total burden hours
Letter to CPS Agencies	120	1	.20	24
Letter to Sentinel Agencies	1,600	1	.20	320
	12,000	1	.20	2,400

Estimated Total Annual Burden Hours: 2,744.

Additional Information: Copies of the proposed collection may be obtained by writing to the Administration for Children and Families, Office of Administration, Office of Information Services, 370 L'Enfant Promenade, SW., Washington, DC 20447, Attn: ACF Reports Clearance Officer. All requests should be identified by the title of the information collection. E-mail address: *grjohnson@acf.hhs.gov.*

OMB Comment: OMB is required to make a decision concerning the collection of information between 30 and 60 days after publication of this document in the **Federal Register**. Therefore, a comment is best assured of having its full effect if OMB receives it within 30 days of publication. Written comments and recommendations for the proposed information collection should be sent directly to the following: Office of Management and Budget, Paperwork Reduction Project, Attn: Desk Officer for ACF, E-mail address: *Katherine_T._Astrich@omb.eop.gov.*

Dated: January 6, 2005.

Robert Sargis,

Reports Clearance Officer.

[FR Doc. 05–678 Filed 1–12–05; 8:45 am]

BILLING CODE 4184–01–M

DEPARTMENT OF HEALTH AND HUMAN SERVICES

Administration for Children and Families

Submission for OMB Review; Comment Request

Title: Head Start Program Information Report.

OMB No.: 0980–0017.

Description: Section 650 of the Head Start Act requires the Secretary of the Department of Health and Human Services to prepare and submit a report to the Congress at least once every two years. This report shall include information contained in the document entitled the ''Head Start Program Information Report.'' The Head Start Bureau is proposing to renew approval of this information collection document.

Respondents: Head Start and Early Head Start grantees and delegate agencies.

ANNUAL BURDEN ESTIMATES

Instrument	Number of respondents	Number of responses per respondent	Average burden hours per response	Total burden hours
Head Start Program Information Report	2690	1	4.0	10,760

Estimated Total Annual Burden Hours: 10,760.

Additional Information: Copies of the proposed collection may be obtained by writing to the Administration for Children and Families, Office of Administration, Office of Information Services, 370 L'Enfant Promenade, SW., Washington, DC 20447, Attn: ACF Reports Clearance Officer. E-mail address: *grjohnson@acf.hhs.gov.*

OMB Comment: OMB is required to make a decision concerning the collection of information between 30 and 60 days after publication of this document in the **Federal Register**. Therefore, a comment is best assured of having its full effect if OMB receives it within 30 days of publication. Written comments and recommendations for the proposed information collection should be sent directly to the following: Office of Management and Budget, Paperwork Reduction Project, Attn: Desk Officer for ACF, E-mail address: *Katherine_T._Astrich@omb.eop.gov.*

Dated: January 5, 2005.

Robert Sargis,

Reports Clearance, Officer.

[FR Doc. 05–679 Filed 1–12–05; 8:45 am]

BILLING CODE 4184–01–M

DEPARTMENT OF HEALTH AND HUMAN SERVICES

Food and Drug Administration

[Docket No. 2004N–0564]

Agency Information Collection Activities; Proposed Collection; Comment Request; Temporary Marketing Permit Applications

AGENCY: Food and Drug Administration, HHS.

ACTION: Notice.

SUMMARY: The Food and Drug Administration (FDA) is announcing an opportunity for public comment on the proposed collection of certain information by the agency. Under the Paperwork Reduction Act of 1995 (the PRA), Federal agencies are required to publish notice in the **Federal Register** concerning each proposed collection of information, including each proposed extension of an existing collection of information, and to allow 60 days for public comment in response to the notice. This notice solicits comments on reporting requirements contained in existing FDA regulations governing temporary marketing permit applications.

DATES: Submit written or electronic comments on the collection of information by March 14, 2005.

ADDRESSES: Submit electronic comments on the collection of information to: *http://www.fda.gov/dockets/ecomments.* Submit written comments on the collection of information to the Division of Dockets

Management (HFA–305), Food and Drug Administration, 5630 Fishers Lane, rm. 1061, Rockville, MD 20852. All comments should be identified with the docket number found in brackets in the heading of this document.

FOR FURTHER INFORMATION CONTACT: Peggy Robbins, Office of Management Programs (HFA–250), Food and Drug Administration, 5600 Fishers Lane, Rockville, MD 20857, 301–827–1223.

SUPPLEMENTARY INFORMATION: Under the PRA (44 U.S.C. 3501–3520), Federal agencies must obtain approval from the Office of Management and Budget (OMB) for each collection of information they conduct or sponsor. ''Collection of information'' is defined in 44 U.S.C. 3502(3) and 5 CFR 1320.3(c) and includes agency requests or requirements that members of the public submit reports, keep records, or provide information to a third party. Section 3506(c)(2)(A) of the PRA (44 U.S.C. 3506(c)(2)(A)) requires Federal agencies to provide a 60-day notice in the **Federal Register** concerning each proposed collection of information, including each proposed extension of an existing collection of information, before submitting the collection to OMB for approval. To comply with this requirement, FDA is publishing notice of the proposed collection of information set forth in this document.

With respect to the following collection of information, FDA invites comments on these topics: (1) Whether the proposed collection of information is necessary for the proper performance of FDA's functions, including whether the information will have practical utility; (2) the accuracy of FDA's estimate of the burden of the proposed collection of information, including the validity of the methodology and assumptions used; (3) ways to enhance the quality, utility, and clarity of the information to be collected; and (4) ways to minimize the burden of the collection of information on respondents, including through the use of automated collection techniques, when appropriate, and other forms of information technology.

Temporary Marketing Permit Applications—21 CFR 130.17(c) and (i) (OMB Control Number 0910–0133)—Extension

Section 401 of the Federal Food, Drug, and Cosmetic Act (the act) (21 U.S.C. 341), directs FDA to issue regulations establishing definitions and standards of identity for food ''[w]henever * * * such action will promote honesty and fair dealing in the interest of consumers * * *''. Under section 403(g) of the act (21 U.S.C. 343(g)), a food that is subject to a definition and standard of identity prescribed by regulation is misbranded if it does not conform to such definition and standard of identity. Section 130.17 (21 CFR 130.17) provides for the issuance by FDA of temporary marketing permits that enable the food industry to test consumer acceptance and measure the technological and commercial feasibility in interstate commerce of experimental packs of food that deviate from applicable definitions and standards of identity. Section 130.17(c) enables the agency to monitor the manufacture, labeling, and distribution of experimental packs of food that deviate from applicable definitions and standards of identity. The information so obtained can be used in support of a petition to establish or amend the applicable definition or standard of identity to provide for the variations. Section 130.17(i) specifies the information that a firm must submit to FDA to obtain an extension of a temporary marketing permit.

FDA estimates the burden of this collection of information as follows:

TABLE 1.—ESTIMATED ANNUAL REPORTING BURDEN[1]

21 CFR Section	No. of Respondents	Annual Frequency per Response	Total Annual Responses	Hours per Response	Total Hours
130.17(c)	3	2	6	25	150
130.17(i)	4	2	8	2	16
Total					166

[1]There are no capital costs or operating and maintenance costs associated with this collection of information.

The estimated number of temporary marketing permit applications and hours per response is an average based on the agency's experience with applications received October 1, 2001, through September 30, 2004, and information from firms that have submitted recent requests for temporary marketing permits.

Dated: January 7, 2005.

Jeffrey Shuren,

Assistant Commissioner for Policy.

[FR Doc. 05–672 Filed 1–12–05; 8:45 am]

BILLING CODE 4160–01–S

DEPARTMENT OF HEALTH AND HUMAN SERVICES

Food and Drug Administration

[Docket No. 2004N–0565]

Agency Information Collection Activities; Proposed Collection; Comment Request; State Petitions for Exemption From Preemption

AGENCY: Food and Drug Administration, HHS.

ACTION: Notice.

SUMMARY: The Food and Drug Administration (FDA) is announcing an opportunity for public comment on the proposed collection of certain information by the agency. Under the Paperwork Reduction Act of 1995 (the PRA), Federal agencies are required to publish notice in the **Federal Register** concerning each proposed collection of information, including each proposed extension of an existing collection of information, and to allow 60 days for public comment in response to the notice. This notice solicits comments on reporting requirements contained in existing FDA regulations governing State petitions for exemption from preemption.

DATES: Submit written or electronic comments on the collection of information by March 14, 2005.

ADDRESSES: Submit electronic comments on the collection of information to: *http://www.fda.gov/dockets/ecomments*. Submit written comments on the collection of information to the Division of Dockets Management (HFA–305), Food and Drug Administration, 5630 Fishers Lane., rm. 1061, Rockville, MD 20852. All comments should be identified with the docket number found in brackets in the heading of this document.

FOR FURTHER INFORMATION CONTACT: Peggy Robbins, Office of Management Programs (HFA–250), Food and Drug Administration, 5600 Fishers Lane, Rockville, MD 20857, 301–827–1223.

SUPPLEMENTARY INFORMATION: Under the PRA (44 U.S.C. 3501–3520), Federal agencies must obtain approval from the Office of Management and Budget (OMB) for each collection of information they conduct or sponsor. ''Collection of information'' is defined in 44 U.S.C. 3502(3) and 5 CFR 1320.3(c) and includes agency requests or requirements that members of the public submit reports, keep records, or provide information to a third party. Section 3506(c)(2)(A) of the PRA (44 U.S.C. 3506(c)(2)(A)) requires Federal agencies to provide a 60–day notice in the **Federal Register** concerning each proposed collection of information, including each proposed extension of an existing collection of information, before submitting the collection to OMB for approval. To comply with this requirement, FDA is publishing notice of the proposed collection of information set forth in this document.

With respect to the following collection of information, FDA invites comments on these topics: (1) Whether the proposed collection of information is necessary for the proper performance of FDA's functions, including whether the information will have practical utility; (2) the accuracy of FDA's estimate of the burden of the proposed collection of information, including the validity of the methodology and assumptions used; (3) ways to enhance the quality, utility, and clarity of the information to be collected; and (4) ways to minimize the burden of the collection of information on respondents, including through the use of automated collection techniques, when appropriate, and other forms of information technology.

State Petitions for Exemption From Preemption—21 CFR 100.1(d) (OMB Control Number 0910–0277)—Extension

Under section 403A(b) of the Federal Food, Drug, and Cosmetic Act (the act) (21 U.S.C. 343–1(b)), States may petition FDA for exemption from Federal preemption of State food labeling and standard of identity requirements. Section 100.1(d) (21 CFR 100.1(d)) sets forth the information a State is required to submit in such a petition. The information required under § 100.1(d) enables FDA to determine whether the State food labeling or standard of identity requirement satisfies the criteria of section 403A(b) of the act for granting exemption from Federal preemption.

FDA estimates the burden of this collection of information as follows:

TABLE 1.—ESTIMATED ANNUAL REPORTING BURDEN[1]

21 CFR Section	Number of Respondents	Annual Frequency per Response	Total Annual Responses	Hours per Response	Total Hours
100.1(d)	1	1	1	40	40

[1] There are no capital costs or operating and maintenance costs associated with this collection of information.

The reporting burden for § 100.1(d) is insignificant because petitions for exemption from preemption are seldom submitted by States. In the last 3 years, FDA has not received any new petitions; therefore, the agency estimates that one or fewer petitions will be submitted annually. Because § 100.1(d) implements a statutory information collection requirement, only the additional burden attributable to the regulation has been included in the estimate. Although FDA believes that the burden will be insignificant, it believes these information collection provisions should be extended to provide for the potential future need of a State or local government to petition for an exemption from preemption under the provisions of section 403(A) of the act.

Dated: January 7, 2005.

Jeffrey Shuren,

Assistant Commissioner for Policy.

[FR Doc. 05–674 Filed 1–12–05; 8:45 am]

BILLING CODE 4160–01–S

DEPARTMENT OF HEALTH AND HUMAN SERVICES

Food and Drug Administration

[Docket No. 2004N–0436]

Agency Information Collection Activities; Submission for Office of Management and Budget Review; Comment Request; Medical Device Registration and Listing

AGENCY: Food and Drug Administration, HHS.

ACTION: Notice.

SUMMARY: The Food and Drug Administration (FDA) is announcing that a proposed collection of information has been submitted to the Office of Management and Budget (OMB) for review and clearance under the Paperwork Reduction Act of 1995.

DATES: Fax written comments on the collection of information by February 14, 2005.

ADDRESSES: OMB is still experiencing significant delays in the regular mail, including first class and express mail, and messenger deliveries are not being accepted. To ensure that comments on the information collection are received, OMB recommends that written comments be faxed to the Office of Information and Regulatory Affairs, OMB, Attn: Fumie Yokota, Desk Officer for FDA, FAX: 202–395–6974.

FOR FURTHER INFORMATION CONTACT: Peggy Robbins, Office of Management Programs (HFA–250), Food and Drug Administration, 5600 Fishers Lane, Rockville, MD 20857, 301–827–1223.

SUPPLEMENTARY INFORMATION: In compliance with 44 U.S.C. 3507, FDA has submitted the following proposed collection of information to OMB for review and clearance.

Medical Device Registration and Listing—21 CFR Parts 807.22, 807.31, and 807.40 (OMB Control Number 0910–0387)—Extension

Section 510 of the Federal Food, Drug, and Cosmetic Act (the act) (21 U.S.C. 360) requires domestic establishments engaged in the manufacture, preparation, propagation, compounding, assembly, or processing of medical devices intended for human use and commercial distribution register their establishments and list the devices they manufacture with FDA. This is accomplished by completing FDA Form 2891 ''Registration of Device Establishment'' and FDA Form 2892 ''Medical Device Listing.'' The term ''device'' is defined in section 201(h) of the act (21 U.S.C. 321) and includes all in vitro diagnostic products and in vitro diagnostic biological products not subject to licensing under section 351 of

the Public Health Service Act (42 U.S.C. 262). The FDA Modernization Act of 1997 (FDAMA) added a requirement for foreign establishments to appoint a U.S. agent and submit the information to FDA on Form 2891 as part of its initial and updated registration information. In addition, each year, active, registered establishments must notify FDA of changes to the current registration and device listing for the establishment. Annual changes to current registration information are preprinted on FDA Form 2891a and sent to registered establishments. The form must be sent back to FDA's Center for Devices and Radiological Health, even if no changes have occurred. Changes to listing information are submitted on Form 2892.

Under § 807.31 (21 CFR 807.31), each owner or operator is required to maintain an historical file containing the labeling and advertisements in use on the date of initial listing, and in use after October 10, 1978, but before the date of initial listing. The owner or operator must maintain in the historical file any labeling or advertisements in which a material change has been made anytime after initial listing, but may discard labeling and advertisements from the file 3 years after the date of the last shipment of a discontinued device by an owner or operator. Along with the recordkeeping requirements previously mentioned in this document, the owner or operator must be prepared to submit to FDA all labeling and advertising (§ 807.31(e)).

Section 807.40 (21 CFR 807.40) describes the role of the U.S. agent. The U.S. agent must reside or have a physical place of business in the United States, and each foreign establishment must submit U.S. agent information as part of its initial and updated registration process.

The information collected through these provisions is used by FDA to identify firms subject to FDA's regulations and is used to identify geographic distribution in order to effectively allocate FDA's field resources for these inspections and to identify the class of the device that determines the inspection frequency. When complications occur with a particular device or component, manufacturers of similar or related devices can be easily identified.

The likely respondents to this information collection will be domestic and foreign device establishments and U.S. agents who must register and submit a device list to FDA (e.g., establishments engaged in the manufacture, preparation, propagation, compounding, assembly, or processing of medical devices intended for human use and commercial distribution).

In the **Federal Register** of October 29, 2004 (69 FR 63156), FDA published a 60-day notice requesting public comment on the information collection provisions. No comments were received.

FDA estimates the burden of this collection of information as follows:

Estimated Annual Reporting Burden

Table 1A.—Estimated Year 1 Annual Reporting Burden[1]

21 CFR Section	FDA Form	No. of Respondents	Annual Frequency of Response	Total Annual Responses	Hours Per Response	Total Hours
807.22(a) and 807.40	Form 2891 Initial and Updates Establishment Registration	2,900	1	2,900	.25	725
807.22(b)	Form 2892 Device Listing–initial and updates	4,400	1	4,400	.50	2,200
807.22(a) and 807.40	Form 2891a–Registration Update	25,100	1	25,100	.25	6,275
807.31(e)		200	1	200	.50	100
Total Year 1 Burden Hours						9,300

[1] There are no capital costs or operating and maintenance costs associated with this collection of information.

Table 1B.—Estimated Subsequent Years Annual Reporting Burden[1]

21 CFR Section	FDA Form	No. of Respondents	Annual Frequency of Response	Total Annual Responses	Hours Per Response	Total Hours
807.22(a) and 807.40	Form 2891 Initial and Updates Establishment Registration	3,100	1	3,100	.25	775
807.22(b)	Form 2892 Device Listing–initial and updates	4,600	1	4,600	.50	2,300
807.22(a) and 807.40	Form 2891a–Registration Update	25,100	1	25,100	.25	6,275
807.31(e)		200	1	200	.50	100
Total Year 2 and 3 Burden Hours						9,450

[1] There are no capital costs or operating and maintenance costs associated with this collection of information.

TABLE 2.—ESTIMATED ANNUAL RECORDKEEPING BURDEN

21 CFR Section	No. of Recordkeepers	Annual Frequency per Recordkeeper	Total Annual Records	Hours Per Recordkeeper	Total Hours
807.31	16,200	4	64,800	.50	32,400
Total Burden Hours					32,400

The burdens are explained as follows:

The annual reporting burden hours to respondents for registering establishments and listing devices is estimated to be 9,450 hours, and recordkeeping burden hours for respondents is estimated to be 32,400 hours. The estimates cited in tables 1A, 1B, and 2 of this document are based primarily upon the annual FDA accomplishment report, which includes actual FDA registration and listing figures from fiscal year (FY) 2003. These estimates are also based on FDA estimates of FY 2003 data from current systems, conversations with industry and trade association representatives, and from internal review of the documents referred to in tables 1A, 1B, and 2 of this document.

According to 21 CFR part 807, all owners/operators are required to list, and establishments and U.S. agents are required to register. Each owner/operator has an average of two establishments, according to statistics gathered from FDA's registration and listing database. The database has 25,100 active establishments listed in it. Based on past experience, the agency anticipated that approximately 7,300 registrations will be processed during the first year, and 3,100 thereafter. FDA anticipates reviewing 200 historical files annually.

Dated: January 7, 2005.

Jeffrey Shuren,

Assistant Commissioner for Policy.

[FR Doc. 05–676 Filed 1–12–05; 8:45 am]

BILLING CODE 4160–01–S

DEPARTMENT OF HEALTH AND HUMAN SERVICES

Food and Drug Administration

[Docket No. 2004F–0546]

Alltech, Inc.; Filing of Food Additive Petition

AGENCY: Food and Drug Administration, HHS.

ACTION: Notice.

SUMMARY: The Food and Drug Administration (FDA) is announcing that Alltech, Inc., has filed a petition proposing that the food additive regulations be amended to provide for the safe use of polyurethane polymer coating in ruminant feed.

DATES: Submit written or electronic comments by March 29, 2005.

ADDRESSES: Submit written comments to the Division of Dockets Management (HFA–305), Food and Drug Administration, 5630 Fishers Lane, rm. 1061, Rockville, MD 20852. Submit electronic comments to *http://www.fda.gov/dockets/ecomments*.

FOR FURTHER INFORMATION CONTACT: Isabel Pocurull, Center for Veterinary Medicine, Food and Drug Administration, 7519 Standish Pl., Rockville, MD 20855, 240–453–6853, email: *ipocurull@cvm.fda.gov*.

SUPPLEMENTARY INFORMATION: Under the Federal Food, Drug, and Cosmetic Act (section 409(b)(5) (21 U.S.C. 348(b)(5))), notice is given that a food additive petition (FAP 2253) has been filed by Alltech, Inc., 3031 Catnip Hill Pike, Nicholasville, KY 40356. The petition proposes to amend the food additive regulations in part 573 *Food Additives permitted in Feed and Drinking Water of Animals* (21 CFR part 573) to provide for the safe use of polyurethane polymer coating in ruminant feed.

The potential environmental impact of this action is being reviewed. To encourage public participation consistent with regulations issued under the National Environmental Policy Act (40 CFR 1501.4(b)), the agency is placing the environmental assessment submitted with the petition that is the subject of this notice on public display at the Division of Dockets Management (see **ADDRESSES**) for public review and comment.

Interested persons may submit to the Division of Dockets Management (see **ADDRESSES**) written or electronic comments regarding this document. Submit a single copy of electronic comments or two paper copies of any mailed comments, except that individuals may submit one paper copy. Comments are to be identified with the docket number found in brackets in the heading of this document. Received comments may be seen in the Division of Dockets Management between 9 a.m. and 4 p.m., Monday through Friday.

FDA will also place on public display any amendments to, or comments on, the petitioner's environmental assessment without further announcement in the **Federal Register**. If, based on its review, the agency finds that an environmental impact statement is not required and this petition results in a regulation, the notice of availability of the agency's finding of no significant impact and the evidence supporting that finding will be published with the regulation in the **Federal Register** in accordance with 21 CFR 25.51(b).

Dated: January 3, 2005.

Stephen F. Sundlof,

Director, Center for Veterinary Medicine.

[FR Doc. 05–673 Filed 1–12–05; 8:45 am]

BILLING CODE 4160–01–S

DEPARTMENT OF HEALTH AND HUMAN SERVICES

Food and Drug Administration

[Docket No. 2004D–0549]

Draft Guidance for Industry on Labeling Over-the-Counter Human Drug Products; Questions and Answers; Availability

AGENCY: Food and Drug Administration, HHS.

ACTION: Notice.

SUMMARY: The Food and Drug Administration (FDA) is announcing the availability of a draft guidance for industry entitled ''Labeling OTC Human Drug Products—Questions and Answers.'' This guidance is intended to assist manufacturers, packers, and distributors of over-the-counter (OTC) drug products to implement the agency's regulation on standardized content and format requirements for the labeling of OTC drug products. This draft guidance discusses labeling questions that have been frequently asked by manufacturers, packers, and distributors in implementing the new requirements. The labeling examples in this draft guidance show various format and content features and suggest how OTC drug monograph labeling information finalized before the new

requirements can be converted to the new format.

DATES: Submit written or electronic comments on the draft guidance for industry by March 14, 2005. General comments on agency guidance documents are welcome at any time.

ADDRESSES: Submit written requests for single copies of the draft guidance to the Division of Drug Information (HFD–240), Center for Drug Evaluation and Research, Food and Drug Administration, 5600 Fishers Lane, Rockville, MD 20857. Send one self-addressed adhesive label to assist that office in processing your requests. Submit written comments on the draft guidance to the Division of Dockets Management (HFA–305), Food and Drug Administration, 5630 Fishers Lane, rm. 1061, Rockville, MD 20852. Submit electronic comments to *http://www.fda.gov/dockets/ecomments*. See the **SUPPLEMENTARY INFORMATION** section for electronic access to the draft guidance document.

FOR FURTHER INFORMATION CONTACT: Cazemiro R. Martin or Gerald M. Rachanow, Center for Drug Evaluation and Research (HFD–560), Food and Drug Administration, 5600 Fishers Lane, Rockville, MD 20857, 301–827–2222.

SUPPLEMENTARY INFORMATION:

I. Background

FDA is announcing the availability of a draft guidance for industry entitled ''Labeling OTC Human Drug Products—Questions and Answers.'' This is one of several draft guidances the agency is developing to help manufacturers, packers, and distributors implement the regulation establishing standardized content and format requirements for the labeling of all OTC drug products. Once finalized, these draft guidances will supersede all other statements, feedback, and correspondence provided by the agency on these matters since the issuance of the final rule.

In the **Federal Register** of March 17, 1999 (64 FR 13254), FDA published a final rule establishing standardized content and format requirements for the labeling of OTC drug products (21 CFR 201.66). This regulation is intended to standardize labeling for all OTC drug products so consumers can easily read and understand OTC drug product labeling and use these products safely and effectively.

The regulation for this standardized labeling requires manufacturers to present OTC drug labeling information in a prescribed order and format. The standardized format will require revision of all labeling in use before the compliance date of the final rule. The final rule covers all OTC drug and drug-cosmetic products, whether marketed under a new drug marketing application, abbreviated new drug application, or OTC drug monograph (or product not yet the subject of a final OTC drug monograph).

Following issuance of the final rule, the agency received a number of inquires from manufacturers seeking guidance on how to present the labeling information for their OTC drug products using the standardized content and format requirements. This draft guidance discusses those inquiries and provides labeling examples to show various format and content features of the labeling requirements and suggest how OTC drug monograph labeling finalized before the new regulation was issued can be converted to the new format. This draft guidance also discusses how to list inactive ingredients that may or may not be contained in the OTC drug product.

This level I draft guidance is being issued consistent with FDA's good guidance practices (21 CFR 10.115). The draft guidance includes labeling examples that are consistent with the new OTC drug products standardized labeling content and format. The draft guidance represents the agency's current thinking on how OTC drug monograph labeling can be converted to the new OTC ''Drug Facts'' format labeling. It does not create or confer any rights for or on any person and does not operate to bind FDA or the public. An alternative approach may be used if such an approach satisfies the requirements of the applicable statutes and regulations.

II. Comments

Interested persons may submit to the Division of Dockets Management (see **ADDRESSES**) written or electronic comments on the draft guidance. Submit a single copy of electronic comments or two copies of any mailed comments except that individuals may submit one paper copy. Comments are to be identified with the docket number found in brackets in the heading of this document. The draft guidance and received comments are available for public examination in the Division of Dockets Management between 9 a.m. and 4 p.m., Monday through Friday.

III. Electronic Access

Persons with access to the Internet may obtain the document at either *http://www.fda.gov/cder/guidance/index.htm* or *http://www.fda.gov/ohrms/dockets/default.htm*.

Dated: December 28, 2004.

William K. Hubbard,

Associate Commissioner for Policy and Planning.

[FR Doc. 05–696 Filed 1–12–05; 8:45 am]

BILLING CODE 4160–01–S

DEPARTMENT OF HEALTH AND HUMAN SERVICES

Health Resources and Services Administration

Agency Information Collection Activities: Submission for OMB Review; Comment Request

Periodically, the Health Resources and Services Administration (HRSA) publishes abstracts of information collection requests under review by the Office of Management and Budget (OMB), in compliance with the Paperwork Reduction Act of 1995 (44 U.S.C. Chapter 35). To request a copy of the clearance requests submitted to OMB for review, call the HRSA Reports Clearance Office on (301) 443–1129.

The following request has been submitted to the Office of Management and Budget for review under the Paperwork Reduction Act of 1995:

Proposed Project: Surveys of Safety Net Providers for the Healthy Communities Access Program National Evaluation—New

The Bureau of Primary Health Care, Health Resources and Services Administration, is conducting a national evaluation of the Healthy Communities Access Program (HCAP) as required by section 340(i) of the Public Health Service Act (42 U.S.C. 256) Public Law 107–251, Oct. 26, 2002.

Surveys of Safety Net Providers and Consortium Leaders will be performed to provide essential information not otherwise available for the national evaluation. Based on consortia response rates of 70% for the provider survey and 75% for the consortia leader survey, it is estimated that 405 Safety Net Providers and 145 Consortia Leaders will complete the surveys.

A preliminary review of the sampling frame for safety net providers indicates that the allocated sample provides adequate representation of all provider types of interest. Legislatively required provider members of HCAP consortia are included in the sample, *i.e.*, hospitals, federally qualified health centers, public health departments, and public/private providers that serve the medically underinsured and underserved. The survey results will be considered along with information from other quantitative and qualitative data

sources (including national, State and local data and information from grantee consortia leaders and clients) in order to develop a Report to Congress in September 2005 and a national evaluation report by September 2006. The survey will collect data for key evaluation goals including coordination and integration of safety net services, capacity and access issues, health care delivery, quality of care, cost savings, sustainability, and provider and patient satisfaction.

The survey of the HCAP consortia leaders, who typically are project directors, is a short Web-based survey of 12 questions that will be available through the HRSA HCAP Web site. The sample of eligible consortia includes all those who have received HCAP funding, with the exception of the most recent round of HCAP grantees. These grantees were excluded from the sample because they lack program experience that would provide the evaluation with significant information. This survey will be used to assess consortia leaders' perspectives on the strengths and limitations of using consortia to strengthen the community safety net. It will query leaders on the perceived efficacy of the consortia approach, accomplishments, strengths, weaknesses and suggestions/areas for future improvement of the program. The burden estimate is as follows:

Data collection	Number of respondents	Responses per respondent	Total responses	Hours per response	Total burden hours
Provider Survey	405	1	405	.33	134
Consortia Leaders Survey	145	1	145	.25	36
Totals	550		550		170

Request for Comments: Written comments and recommendations concerning the proposed information collection should be sent within 30 days of this notice to: Desk Officer, Health Resources and Services Administration, Human Resources and Housing Branch, Office of Management and Budget, New Executive Office Building, Room 10235, Washington, DC 20503.

Dated: January 7, 2005.

Steven A. Pelovitz,

Associate Administrator for Administration and Financial Management.

[FR Doc. 05–671 Filed 1–12–05; 8:45 am]

BILLING CODE 4165–15–P

DEPARTMENT OF HEALTH AND HUMAN SERVICES

Health Resources and Services Administration

Advisory Committee on Interdisciplinary, Community-Based Linkages; Notice of Meeting

In accordance with section 10(a)(2) of the Federal Advisory Committee Act (Pub. L. 92–463), notice is hereby given of the following meeting:

Name: Advisory Committee on Interdisciplinary, Community-Based Linkages.

Dates and Times: January 31, 2005, 8:30 a.m.–5 p.m. February 1, 2005, 8:30 a.m.–5 p.m. February 2, 2005, 8:30 a.m.–2 p.m.

Place: The DoubleTree Hotel, 1750 Rockville Pike, Rockville, MD 20852.

Status: The meeting will be open to the public.

Agenda: Agenda items will include, but not be limited to: Welcome; plenary session on Allied Health issues as they relate to the grant programs under the purview of the Committee with presentations by speakers representing the Department of Health and Human Services (DHHS), constituent groups, field experts and committee members. The following topics will be addressed at the meeting: What are HRSA/BHPr's Allied Health projects and what does the legislation dictate; what is the past history, current status, and future outlook of Allied Health; and, what is the Allied Health Reinvestment Act (S. 2491/H.R. 4016—108th Congress).

Proposed agenda items are subject to change as priorities dictate.

Public Comments: Public comment will be permitted at the end of the Committee meeting on January 31, 2005, and before lunch on February 1, 2005. Oral presentations will be limited to 5 minutes per public speaker. Persons interested in providing an oral presentation should submit a written request, with a copy of their presentation to: Ann Bell, Public Health Fellow, Division of State, Community and Public Health, Bureau of Health Professions, Health Resources and Services Administration, Room 8A–09, 5600 Fishers Lane, Rockville, Maryland 20857, Telephone (301) 443–0582.

Requests should contain the name, address, telephone number, and any business or professional affiliation of the person desiring to make an oral presentation. Groups having similar interests are requested to combine their comments and present them through a single representative. The Division of State, Community and Public Health will notify each presenter by mail or telephone of their assigned presentation time.

Persons who do not file a request in advance for a presentation, but wish to make an oral statement may register to do so at the DoubleTree Hotel, Rockville, MD, on January 31, 2005. These persons will be allocated time as the Committee meeting agenda permits.

For Further Information Contact: Anyone requiring information regarding the Committee should contact Ann Bell, Division of State, Community and Public Health, Bureau of Health Professions, Health Resources and Services Administration, Room 8A–09, 5600 Fishers Lane, Rockville, Maryland 20857, Telephone (301) 443–0582.

Dated: January 7, 2005.

Steven A. Pelovitz,

Associate Administrator for Administration and Financial Management.

[FR Doc. 05–670 Filed 1–12–05; 8:45 am]

BILLING CODE 4165–15–P

DEPARTMENT OF THE INTERIOR

Bureau of Indian Affairs

Request for Nominations of Members To Serve on the Bureau of Indian Affairs Advisory Board for Exceptional Education

AGENCY: Bureau of Indian Affairs, Interior.

ACTION: Notice of request for nominations.

SUMMARY: Pursuant to the Federal Advisory Committee Act (FACA) and the Individuals with Disabilities Education Act (IDEA), the Bureau of Indian Affairs (BIA), Office of Indian Education Programs (OIEP), requests nominations of individuals to serve on the BIA Advisory Board for Exceptional Education (Advisory Board). The BIA/OIEP will consider nominations received in response to this Request for Nominations. The **SUPPLEMENTARY INFORMATION** section provides committee and membership criteria, and the membership nomination form.

DATES: Submit nominations on or before February 14, 2005.

ADDRESSES: Please submit nomination applications to Gloria Yepa, Supervisory Education Specialist, BIA, OIEP, Center For School Improvement, 500 Gold

Avenue, SW., Post Office Box 1088, Albuquerque, New Mexico 87103–1088.

FOR FURTHER INFORMATION CONTACT: Gloria Yepa, Supervisory Education Specialist, Office of Indian Education Programs, Center for School Improvement, (505) 248–7541.

SUPPLEMENTARY INFORMATION: The Advisory Board was established in accordance with the Federal Advisory Committee Act, Public Law 92–463, 5 U.S.C, Appendix 2, Section 10(a)(b). The following provides information about the committee objective and duties, membership, miscellaneous, nomination information, and membership nomination form.

Objective and Duties

(a) Members of the Advisory Board provide guidance, advice and recommendations with respect to special education and related services for children with disabilities in BIA funded schools in accordance with the requirements of IDEA;

(b) Provides advice and recommendations for the coordination of services within the BIA and with other local, State and Federal agencies;

(c) Provides advice and recommendations on a broad range of policy issues dealing with the provision of educational services to American Indian children with disabilities;

(d) Serves as an advocate for American Indian students with special education needs by providing advice and recommendations regarding best practices, effective program coordination strategies, and recommendations for improved educational programming;

(e) Provides advice and recommendations for the preparation of information required to be submitted to the Secretary of Education under section 611(i)(2)(D) of IDEA;

(f) Provides advice and recommends policies concerning effective inter/intra-agency collaboration, including modifications to regulations, and the elimination of barriers to inter/intra-agency programs and activities; and

(g) Reports to the BIA/OIEP Lead Supervisory Education Specialist for special education.

Membership

(a) The Board will be composed of 15 members. The Assistant Secretary—Indian Affairs may provide the Secretary of the Interior recommendations for the Chairperson, however, the Secretary of the Interior will appoint the chairperson and other board members. Members will serve for a term of 2 years from the date of their appointment. The Secretary may remove members from the Board at any time at his/her discretion.

(b) As required by the IDEA under section 611(i)(5), the Board will be composed of individuals involved in or concerned with the education and provision of services to Indian children with disabilities. The Board composition will reflect a broad range of viewpoints and will include at least one member representing each of the following interests: Indian persons with disabilities, teachers of children with disabilities, Indian parents or guardians of children with disabilities, service providers, State Education Officials, Local Education Officials, State Interagency Coordinating Councils (for states having Indian reservations), tribal representatives or tribal organization representatives, and BIA employees concerned with the education of children with disabilities.

Miscellaneous

(a) Members of the Board will not receive compensation, but will be reimbursed for travel, subsistence and other necessary expenses incurred in the performance of their duties consistent with the provisions of 5 U.S.C. Chapter 57.

(b) A member may not participate in matters that will directly affect, or appear to affect, the financial interests of the member or the member's spouse or minor children, unless authorized by the Designated Federal Official (DFO). Compensation from employment does not constitute a financial interest of the member so long as the matter before the committee will not have a special or distinct effect on the member or the member's employer, other than as part of a class. The provisions of this paragraph do not affect any other statutory or regulatory ethical obligations to which a member may be subject.

(c) The Committee meets at least twice a year, budget permitting, but additional meetings may be held as deemed necessary by the Assistant Secretary or DFO.

(d) All Committee meetings are open to the public in accordance with the FACA regulations.

Nomination Information

(a) Nominations are requested from individuals, organizations, and federally recognized tribes, as well as from State Directors of Special Education (within the 23 states in which BIA funded schools are located) concerned with the education of Indian children with disabilities as described above.

(b) Nominees should have expertise and knowledge of the issues and/or needs of American Indian children with disabilities. Such knowledge and expertise are needed to provide advice and recommendations to the BIA/OIEP regarding the needs of American Indian children with disabilities.

(c) A summary of the candidates' qualifications (resume or curriculum vitae) must be included with the nomination application. Nominees must have the ability to participate in Advisory Committee meetings, Committee assignments, participate in teleconference calls, and to work in groups.

(d) The Department of the Interior is committed to equal opportunity in the workplace and seeks diverse Committee membership, but is bound by the Indian Preference Act of 1990, 25 U.S.C. 472.

Membership Nomination Form

The membership nomination form is attached to this notice. The nomination form may also be downloaded from the OIEP's Web site at *http://www.ENAN.BIA.EDU*.

Dated: December 22, 2004.

David W. Anderson,

Assistant Secretary—Indian Affairs.

Bureau of Indian Affairs Office of Indian Education Programs Advisory Board for Exceptional Education Membership Nomination Form

Nomination Information

A. Nominations are requested from individuals, organizations, and federally recognized tribes, as well as from State Directors of Special Education (within the 23 states in which BIA funded schools are located) concerned with the education of Indian children with disabilities.

B. Nominees should have expertise and knowledge of the issues and/or needs of American Indian children with disabilities. Such knowledge and expertise are needed to provide advice and recommendations to the BIA/OIEP regarding the needs of American Indian children with disabilities.

C. A summary of the candidates' qualifications *(resume or curriculum vitae) must be included with the nomination application.* Nominees must have the ability to participate in Advisory Committee meetings, Committee assignments, participate in teleconference calls, and to work in groups.

D. The Department of the Interior is committed to equal opportunity in the workplace and seeks diverse Committee membership, however, is bound by the

Indian Preference Act of 1990 (25 U.S.C. 472).

Objective and Duties

A. The Committee provides guidance, advice and recommendations with respect to special education and related services for children with disabilities in BIA funded schools in accordance with the requirements of the Individuals with Disabilities Education Act (IDEA).

B. The Committee provides advice and recommendations for the coordination of services within the BIA and with other local, State and Federal agencies.

C. The Committee provides advice and recommendations on a broad range of policy issues dealing with the provision of educational services to American Indian children with disabilities.

D. The Committee serves as an advocate for American Indian students with special education needs by providing advice and recommendations regarding best practices, effective program coordination strategies, and recommendations for improved educational programming.

E. The Committee provides advice and recommendations for the preparation of information required to be submitted to the Secretary of Education.

F. The Committee provides advice and recommends policies concerning effective inter/intra-agency collaboration, including modifications to regulations, and the elimination of barriers to inter/intra-agency programs and activities.

G. The Committee reports to the Lead Supervisory Education Specialist.

Membership

A. The Board will be composed of 15 members. The Assistant Secretary—Indian Affairs may provide the Secretary of the Interior recommendations for the Chairperson. The Secretary of the Interior as required by IDEA will appoint all board members. Board members will serve for a term of 2 years from the date of their appointment. The Secretary may remove members from the Board at any time at his/her discretion.

B. As required by IDEA under section 611(i)(5), 111 Stat. 59, the Board will be composed of individuals involved in or concerned with the education and provision of services to Indian children with disabilities. The Board composition will reflect a broad range of viewpoints and will include at least one member representing each of the following interests: Indian persons with disabilities, teachers of children with disabilities, Indian parents or guardians of children with disabilities, service providers, State Education Officials, Local Education Officials, State Interagency Coordinating Councils (for states having Indian reservations), tribal representatives or tribal organization representatives, and BIA employees concerned with the education of children with disabilities.

C. Members of the Board will not receive compensation, but will be reimbursed for travel, subsistence and other necessary expenses incurred in the performance of their duties consistent with the provisions of 5 U.S.C. Chapter 57.

D. A member may not participate in matters that will directly affect, or appear to affect, the financial interests of the member or the member's spouse or minor children, unless authorized by the Designated Federal Official (DFO). Compensation from employment does not constitute a financial interest of the member so long as the matter before the committee will not have a special or distinct effect on the member or the member's employer, other than as part of a class. The provisions of this paragraph do not affect any other statutory or regulatory ethical obligations to which a member may be subject.

E. The Committee meets at least twice a year, budget permitting, but additional meetings may be held as deemed necessary by the Assistant Secretary or DFO.

BILLING CODE 4310–6W–P

PLEASE FILL OUT FORM COMPLETELY

Note: Additional pages may be added for further explanation of any item. Reference the corresponding item number for which the additional explanation is made.

1. Full Name:			
2. Mailing Address:	3. City:	4. State:	5. Zip Code:
6. Primary Contact Phone Number: ( )	7. Secondary Contact Phone Number: ( )		
8. Place of Employment			
9. Work Address:	10. City:	11. State:	12. Zip Code:
13. Employment Title:			
14. Work Telefax Number: ( )	15. E-mail address:		

Note to Review Committee: Prior to submitting this nomination application, the above-named individual must be contacted regarding appointment to the Advisory Board. Do not make nomination until this person has been contacted and agreed to have his/her name submitted to the Office of Indian Education/Center for School Improvement for nominations to the Advisory Board.

16. **If appointed, this person will represent one of the following categories** (check all applicable):

_____ Indian persons with disabilities

_____ Teachers of children with disabilities

_____ Indian parents or guardians of children with disabilities

_____ Service providers

_____ State Education Officials

_____ Local Education Officials

_____ State Interagency Coordinating Councils (for states having Indian reservations)

_____ Tribal representatives or tribal organization representatives

_____ BIA employees concerned with the education of children with disabilities

17. **What role would you recommend this nominee serve in?**

_____ Advisory Board Chairperson

_____ Advisory Board Member

18. **Nominee's experience with BIA funded schools** (check all applicable).

_____ BIA Day School

_____ BIA Boarding School

_____ Off-Reservation Boarding School

_____ Tribal Contract School

_____ Tribal Grant School

_____ Cooperative School

19. **Experience.** Provide a brief description of duties and experiences related to the education of Indian infants, toddler, children and youth with disabilities. Include time frames of experience or employment, position titles, location of employment or organization involvement. (Attach additional pages if necessary.)

20. **Membership or affiliation with professional education organizations, particularly special education organizations.** Identify organization offices held if applicable. (Attach additional pages if necessary.)

21. **Special interests, activities, awards (professional, educational and community).** Identify those related to the education of disabled Indian children (infants, toddler, children and/or youth). (Attach additional pages if necessary.)

22. **Nominee recommended by:**

Name of Indian tribe, organization, individual (include position title) making nomination:		
Address of Indian tribe, organization, individual making nomination:		
City:	State:	Zip Code:
Signature of Authorizing Official:		
Date of Signature	Phone (Area code + Number)	Telefax (Area code + Number)

[FR Doc. 05–705 Filed 1–12–05; 8:45 am]
BILLING CODE 4310–6W–C

DEPARTMENT OF THE INTERIOR

Bureau of Indian Affairs

Nominations for Indian Reservation Roads Program Coordinating Committee

AGENCY: Bureau of Indian Affairs, Interior.

ACTION: Notice of intent to form the Indian Reservation Roads Program Coordinating Committee under 25 CFR 170.155–158.

SUMMARY: The Secretary of the Interior is requesting nominations for tribal regional representatives to the Indian Reservation Roads (IRR) Program Coordinating Committee (Committee) which will be established under 25 CFR 170. The IRR final rules amending 25 CFR 170 include establishing a Committee to provide input and recommendations to the Bureau of Indian Affairs (BIA) and the Federal Highway Administration (FHWA) in developing IRR Program policies and procedures and to coordinate with and obtain input from tribes, BIA, and FHWA.

The Secretary will accept only nominations for tribal representatives and alternates officially selected by tribes in each of the 12 BIA regions as stated below.

DATES: Nominations for the IRR Program Coordinating Committee tribal representatives and alternates must be received no later than February 28, 2005 at the address below. Nominations received after this date will not be considered.

ADDRESSES: Send nominations to Mr. LeRoy Gishi, Chief, Division of Transportation, Bureau of Indian Affairs, U.S. Department of the Interior, 1951 Constitution Avenue, NW., Mail Stop 320–SIB, Washington, DC 20240.

FOR FURTHER INFORMATION CONTACT: Mr. LeRoy Gishi, Chief, Division of Transportation, Bureau of Indian Affairs, 1951 Constitution Avenue, NW., Mail Stop 320–SIB, Washington, DC 20240, Telephone (202) 513–7711 or Fax (202) 208–4696.

SUPPLEMENTARY INFORMATION: The IRR final rules amending 25 CFR Part 170, effective November 13, 2004, are the result of negotiated rulemaking between tribal and Federal representatives under the Transportation Equity Act for the 21st Century (TEA–21). The IRR final rules include the negotiated rulemaking committee's recommendation that the Secretary of the Interior and the Secretary of Transportation establish an IRR Program Coordinating Committee to provide input and recommendations to BIA and FHWA in developing IRR Program policies and to coordinate with and obtain input from tribes, BIA, and FHWA. As recommended, the Committee will consist of 12 tribal regional representatives (one from each BIA region) and two non-voting Federal representatives (from BIA and FHWA). In addition to the 12 tribal regional representatives, the Committee will include one alternate from each BIA region who will attend Committee meetings in the absence of the tribal regional representative. Each tribal regional representative must be a tribal governmental official or employee with authority to act for the tribal government.

The Secretary must select regional tribal representatives and alternates from nominees officially proposed by the region's tribes. The Secretary will appoint the initial tribal regional representatives and alternates from each BIA region to either a 1-, 2- or 3-year appointment in order to establish a yearly, one-third change in tribal regional representatives. All appointments thereafter will be for 3-year terms. To the extent possible, the Secretary must make the selection so that there is representation from a broad cross-section of large, medium, and small tribes. The Secretary of the Interior will provide guidance for the replacement of representatives.

IRR Program Coordinating Committee Responsibilities

The responsibilities of the Committee are to provide input and recommendations to BIA and FHWA during the development or revision of:

- BIA/FHWA IRR Program Stewardship Plan;
- IRR Program policy and procedures;
- IRR Program eligible activities' determinations;
- IRR Program transit policy;
- IRR Program regulations;
- IRR Program management systems policy and procedures;
- IRR Program fund distribution formula (under 25 CFR 170.157); and
- National tribal transportation needs.

The Committee also reviews and provides recommendations on IRR Program national concerns, including implementation of 25 CFR 170, as amended.

IRR Program Coordinating Committee Role in the Funding Process

The Committee will provide input and recommendations to BIA and FHWA for:

- New IRR inventory data format and form;
- Simplified cost to construct (CTC) methodology (including formula calculations, formula program and design, and bid tab methodology);
- Cost elements;
- Over-design issues;
- Inflation impacts on $1 million cap for the Indian Reservation Roads High Priority Project (IRRHPP) and Emergency Projects (including the IRRHPP Ranking System and emergency/disaster expenditures report); and
- The impact of including funded but non-constructed projects in the CTC calculation.

IRR Program Coordinating Committee Conduct of Business

The Committee will hold two meetings per fiscal year. The Committee may call additional meeting(s) with the consent of one-third of Committee members or BIA or FHWA may call additional meeting(s). A quorum consists of eight voting Committee members. The Committee will operate by consensus or majority vote, as the Committee determines in its protocols. The Committee must elect from among the Committee membership a Chair, Vice-Chair, and other officers. These officers will be responsible for preparing for and conducting Committee meetings and summarizing meeting results. The Committee may prescribe other duties for the officers. Any Committee member can submit an agenda item to the Committee Chair.

IRR Program Coordinating Committee Reporting Requirements and Budget

The Committee must keep the Secretary and tribes informed through an annual accomplishment report provided within 90 days after the end of each fiscal year. The Committee's budget, funded through the IRR Program management and oversight funds, will not exceed $150,000 annually.

Submitting Nominations

Tribes may nominate up to three individuals from their respective region for the committee. Nominations for alternate positions should clearly state such. Nominees must be tribal governmental officials or employees with authority to act for the tribal government. Nominations must be on official tribal government letterhead signed by a tribal governmental official. Nominations must include written authority for the nominee to act for the tribal government, if the nominee is appointed, and include a resume showing the nominee's relevant education and training, current job description, and professional experience

level in the IRR program, transportation, or transit areas. Incomplete nominations will not be considered.

To be considered, nominations must be received by the close of business February 28, 2005, at the location indicated in the **ADDRESSES** section.

Dated: December 29, 2004.

David W. Anderson,

Assistant Secretary—Indian Affairs.

[FR Doc. 05–727 Filed 1–12–05; 8:45 am]

BILLING CODE 4310–LY–P

DEPARTMENT OF THE INTERIOR

Bureau of Indian Affairs

List of Additional Lands Affected by White Earth Reservation Land Settlement Act of 1985

AGENCY: Bureau of Indian Affairs, Interior.

ACTION: Notice.

SUMMARY: This notice publishes a list of additional allotments or interests on the White Earth Chippewa Reservation in Minnesota. The Department of the Interior, Bureau of Indian Affairs, have determined that certain additional allotments or interests fall within the scope of sections 4(a), 4(b), or 5(c) of the White Earth Reservation Land Settlement Act of 1985. Under section 7(e) of the Act, as amended, any determination made by the Secretary to include an allotment or interest is required to be published in the **Federal Register**.

FOR FURTHER INFORMATION CONTACT: Gene Virden, Superintendent, Minnesota Agency, Bureau of Indian Affairs, 522 Minnesota Avenue, NW., Bemidji, Minnesota 56601, Telephone (218) 751–2011.

SUPPLEMENTARY INFORMATION: The White Earth Reservation Land Settlement Act of 1985, Public Law 99–264 (100 Stat. 61), as amended by Public Law 100–153 (101 Stat. 886), Public Law 100–212 (101 Stat. 1433), and Public Law 101–301 (104 Stat. 210), provides for alternative methods of resolving disputes relative to the title to certain allotments for which trust patents were issued to White Earth Chippewa Indians. Sections 4(a) and 4(b) of the Act define circumstances by which the title to an allotment may have been taken or transferred through a questionable means during the trust period. The Act authorizes the Secretary of the Interior to:

(1) Identify the allotments or interests which were taken or transferred under identified circumstances;

(2) Determine the individuals entitled to compensation under the Act; and

(3) Ascertain the amount of compensation to which each such individual is entitled.

In addition, section 5(c) of the Act provides that the White Earth Band of Chippewa Indians shall be compensated for allotments which were granted to individuals who had died prior to the selection dates of their respective allotments. Under section 8(a) of the Act, the compensation for the taking or transfer of an allotment or interest is to be based on the fair market value of the allotment or interest therein as of the date of such taking or transfer, less any consideration actually received at the time. The compensation to be paid under the Act shall include interest compounded annually at 5 percent from the date of the questionable taking or transfer, until March 24, 1986, and at the general rate of interest earned by Department of the Interior funds thereafter. The Secretary is authorized to issue written notices of compensation determination to the allottees or heirs entitled to it. Such notice will describe the basis for the Secretary's determination, the process whereby such compensation was determined, the method of payment, and the applicable time limits for judicial review of the determination. Any individual who has already elected to file suit in the Federal District Court for the District of Minnesota to seek the recovery of title to an allotment or interest therein, or damages, is barred under section 6(c) from receiving any compensation under the Act.

The Secretary was authorized, under section 7(a) of the Act, to publish a first list of allotments or interest that fall within the provisions of sections 4(a), 4(b), or 5(c) of the Act. The first list of allotments and interests affected by the Act was published in the **Federal Register** on September 19, 1986 (51 FR 33348). The Secretary was also authorized, under section 7(c) of the Act, to publish a second list of allotments and interests affected by the Act, including additions to those appearing on the first list. The amendment contained in Public Law 100–212 authorized the Secretary to include and publish, as part of the second list, corrections to the first list. The list published in the **Federal Register** on March 10, 1989 (54 FR 10216), constitutes the second list of allotments and interests which was determined by the Department of the Interior to fall within the provisions of sections 4(a), 4(b), or 5(c) of the Act.

The Secretary is also authorized, at any time, under section 7(e)(1) of the Act, as amended, to add allotments or interests to the second list if the Secretary determined that the additional allotments or interests fall within the provisions of sections 4(a), 4(b), or 5(c). The first list of such additions was published in the **Federal Register** on March 27, 1991 (56 FR 12818), and a second list of such additions was subsequently published on April 11, 1994 (59 FR 17174). The Secretary has determined that certain additional allotments or interests fall within the provisions of sections 4(a), 4(b), or 5(c). The list included in this notice contains these additions.

The list describes additional allotments and interests, whether the takings or transfers apply to the allottees or the heirs of inherited interests. The lists characterized in the September 19, 1986, and March 10, 1989, publications as those of Partial Interests are no longer being published. All allotments and interests determined by the Secretary to be affected by sections 4(a), 4(b), or 5(c) of the Act are contained in what had been characterized as the Master List in previous publications and in this addition. Some of the allotments contained on the list include herein may represent partial interests only. The failure to include a Partial Interest List does not mean that there are no partial interests.

The inclusion of an allotment or interest on this list may be judicially reviewed under the provisions of the Administrative Procedure Act, 5 U.S.C. 701, *et seq.* Any such action must be filed in Federal District Court for the District of Minnesota and shall be barred unless it is filed within 90 calendar days of this publication.

This notice is published in the exercise of authority delegated by the Secretary of the Interior to the Assistant Secretary—Indian Affairs by 209 DM 8.

Dated: December 23, 2004.

David W. Anderson,

Assistant Secretary—Indian Affairs.

Instruction Sheet

Each questionable taking or transfer has been assigned a 10, 11 or 12 character Issue Number. In every instance, the first six characters, F53408, are identical and denote the Midwest Regional Office, Minnesota Agency and White Earth Indian Reservation. The last four, five and six characters identify the specific taking or transfer. The list contains information regarding allotments and inherited interests, in addition to those listed in previous publications, affected by the Act, including the following subheadings:

Issue Number: The 10, 11 or 12 character number, explained above, which identifies the Regional Office, Agency, Reservation and specific taking or transfer affected by the Act. Where there are multiple tracts of land, there has occasionally been the need to add one or more letters to the Issue Number in order to distinguish among such tracts. Also, where a tract of land has been the subject of multiple takings or transfers by interest holders, letters have been added to the Issue Number to distinguish between such takings and transfers.

Allot #: The number assigned, at the time of the allotment section, to the allotment comprising the tract of land which was involved in the taking or transfer. Many White Earth allottees, after receiving an original allotment, were granted an additional allotment, with different numbers assigned to each. To distinguish between the two allotments, the numbers are preceded by the letter O (Original Allotment) or A (Additional Allotment).

CO: The county in which the tract involved in the taking or transfer is located. These are identified as Becker (B), Clearwater (C) or Mahnomen (M) County.

Legal Sub, SEC, TWP, and RNG: The legal description of the tract which is involved with the taking or transfer by legal Subdivision, Section (SEC), Township (TWP), and Range (RNG) numbers. Where a metes and bounds description is required for the legal subdivision, it is described as MB (Metes and Bounds). Further information concerning such tracts can be obtained from the WELSA Project office in Bemidji, Minnesota.

English Name: All known English names of the allottee, including given name, middle initial, middle name, maiden name, and other English names which have been identified for the allottee.

Ojibway Name: The name of the allottee in Ojibway, the native language of the White Earth Band of the White Earth Band of Chippewa Indians. The names are shown with phonetic spellings.

Tracts which fall within the provisions of section 5(c) of the Act, where the claimant is the White Earth Band, appear on the list with the White Earth Band listed under the sub-heading of English Name.

If you wish further information about allotments or interests which are contained in this list, call or write the WELSA Project office in care of the Bureau of Indian affairs. The address and telephone number are indicated in the **FOR FURTHER INFORMATION CONTACT** section of this document. Be sure to include the complete Issue Number in any correspondence with the Bureau of Indian Affairs.

LIST OF ADDITIONAL LANDS AFFECTED BY THE WHITE EARTH RESERVATION LAND SETTLEMENT ACT OF 1985

Issue number	Allot No.	CO	Legal sub	SEC	TWP	RNG	English name	Ojibwe name
F53–408–0066B	A–2999	M	NESE	14	146	40	Nancy Pine	Ahgwahdaushee.
F53–408–0133	O–0596	B	Lot 4 & SESW	7	142	39	Dan Brown	Kah we tah waush.
F53–408–0135B	O–0613	B	LOT 1 & SENE	23	142	41		Ke way gah bow e quay.
F53–408–0492	O–0577	B	LOTS 1 & 2	7	142	40	Mrs. Joseph Charette	Ayn dus.
F53–408–0493B	A–0507	B	E2SW	16	141	39	Sophia Bellanger Benais.	
F53–408–0713D	A–3051	M	NENW	25	145	42		Nay tah o say quay.
			N2NWNW	25	145	42		
			S2NWNW	24	145	42		
F53–408–0812	O–2614	B	E2SW	21	142	37		Pugenaygeshhigoquay.
F53–408–0968	O–4682	M	NWSW	13	145	40	John/Charles LaRose	Omin way way ge shig.
			NESE	14	146	40		
F53–408–0968D	A–2298	M	NWSW	13	145	40	John/Charles LaRose	Omin way way ge snig.
			NESE	14	145	40		
F53–408–0995	O–3455	M	NESE & SENW	16	143	39	Viola Snider Saign.	
F53–408–0995A	A–1921	M	NWSE & SWNE	16	143	39	Viola Snider Saign.	
F53–408–1007	A–3055	M	Lots 2, 7 & 8	1	146	40	Dorothy Day Dodge	Kah gay ge shig o quay.
F53–408–1223A	O–2945	M	Lots 3 & 9	30	143	42	Jack Papio	In de baince.
F53–408–1223B	O–2945	M	Lots 3 & 9	30	143	42	Jack Papio	In de baince.
F53–408–1809A	A–1224	M	E2SW	33	145	41	Joseph Jourdain.	
F53–408–1823	O–1836	B	Lots 3 & 4	18	142	39		Ayenub.
F53–408–1824	O–3548	M	E2SW	27	145	40	James Staples	Nay wah je ke shig.
F53–408–1824A	O–3548	M	E2SW	27	145	40	James Staples	Nay wah je ke shig.
F53–408–1869A	O–2110	B	E2NW	25	141	37		Ahbetahwahcumigoke.
F53–408–2006H	A–1663	M	W2NW	26	146	39		Obim way way ge shig o quay.
F53–408–2176	O–4312	M	S2NE	15	146	42		Nah ah bun way.
F53–408–2178	O–3162	M	E2SE	30	144	42	Joseph M. Turpin.	
F53–408–2180	O–3963	M	N2SW	20	146	40	Nellie Strong	Ke che wauzh.
F53–408–2180A	O–3963	M	N2SW	20	146	40	Nellie Strong	Ke che wauzh.
F53–408–2181	O–4784	M	E2SE	35	143	40		Oge mah we gah bow.
F53–408–2182	O–0744	B	S2NW	17	141	40	Henry Mason.	
F53–408–2183	A–0656	B	W2NE	35	142	39	Philomene Santwire.	
F53–408–2184	O–3868	B	E2SE	26	142	39	Frank Badboy	Odinegon.
F53–408–2184A	O–3868	B	E2SE	26	142	39	Frank Badboy	Odinegon.
			SWSE Less 2.					
F53–08–2185	A–2102	C	acres	8	145	38	Scott LaPrairie	Dewayayay.
			SWNW	9	145	38		
F53–408–2187	O–2688	B	NENE	15	142	38		Aydowahcumigoquay.
			Lot 4	14	142	38		
F53–408–2188	O–0741	B	SWNW	16	141	40	Catherine Mason.	
			Lot 1	16	141	40		
F53–408–2189	A–2982	M	NWNE & SENW	22	144	39		Mahgaid.
F53–408–2189A	A–2982	M	NWNE & SENW	22	144	39		Mahgaid.
F53–408–2189B	A–2982	M	NWNE & SENW	22	144	39		Mahgaid.

[FR Doc. 05–748 Filed 1–12–05; 8:45 am]

BILLING CODE 4310–W7–P

DEPARTMENT OF THE INTERIOR

Bureau of Land Management

[CO–01–134–1220–241A]

McInnis Canyons National Conservation Area Advisory Council Meeting

AGENCY: Bureau of Land Management, Interior.

ACTION: Notice of meetings.

SUMMARY: The McInnis Canyons National Conservation Area (MCNCA) Advisory Council will hold its first bi-monthly meeting of 2005 on February 2, 2005. The meeting will begin at 3 p.m. and will be held at the Mesa County Administration Building; 544 Rood Avenue, Grand Junction, CO. Additional meetings will also be held on April 6 and June 1 of 2005 at the same location and the same time. Additional meetings for 2005 will be determined at the February 2 meeting and published in the **Federal Register**.

DATES: The meeting will be held on February 2, 2005.

ADDRESSES: For further information or to provide written comments, please contact the Bureau of Land Management (BLM), 2815 H Road, Grand Junction, Colorado 81506; (970) 244–3000.

SUPPLEMENTARY INFORMATION: The Colorado Canyons National Conservation Area was established on October 24, 2000 when the Colorado Canyons National Conservation Area and Black Ridge Wilderness Act of 2000 (the Act) was signed by the President. The Act required that the Advisory Council be established to provide advice in the preparation and implementation of the CCNCA Resource Management Plan. The name was congressionally change at the end of 2004 from Colorado Canyons National Conservation Area to McInnis Canyons National Conservation Area.

The MCNCA Advisory Council will meet on Wednesday, February 2, 2005 at the Mesa County Administration Building; 544 Rood Avenue, Grand Junction, CO, beginning at 3 p.m. The agenda topics for this meeting are:

(1) The re-election of council officials;

(2) MCNCA Resource Management Plan implementation and monitoring strategy;

(3) Budgetary requirements for upcoming fiscal years;

(4) Public comment period;

(5) Agenda for next meeting;

Beginning February of 2005, the MCNCA Advisory Council meetings will be held bi-monthly on the first Wednesday of every other month through June at the same time and location. The dates for these meetings are February 2, 2005; April 6, 2005; and June 1, 2005. Additional meetings for 2005 will be determined at the February meeting.

Topics of discussion for future meetings will include completion of an implementation/business plan, refinement of a monitoring strategy, partnerships, interpretation, adaptive management, socioeconomics, and other issues as appropriate.

All meetings will be open to the public and will include a time set aside for public comment. Interested persons may make oral statements at the meetings or submit written statements at any meeting. Per-person time limits for oral statements may be set to allow all interested persons an opportunity to speak.

Summary minutes of all Council meetings will be maintained at the Bureau of Land Management Office in Grand Junction, Colorado. They are available for public inspection and reproduction during regular business hours within thirty (30) days following the meeting. In addition, minutes and other information concerning the MCNCA Advisory Council, can be obtained from the MCNCA Web site at: *http://www.co.blm.gov/gjra/mcnca/mcncahome.htm,* which will be updated following each Advisory Council meeting.

Dated: January 6, 2005.

Paul H. Peck,

Manager, McInnis Canyons National Conservation Area.

[FR Doc. 05–683 Filed 1–12–05; 8:45 am]

BILLING CODE 4310–JB–P

DEPARTMENT OF THE INTERIOR

Bureau of Land Management

[WY–100–05–1310–DB]

Notice of Meeting of the Pinedale Anticline Working Group's Reclamation Task Group

AGENCY: Bureau of Land Management, Interior.

ACTION: Notice of public meeting.

SUMMARY: In accordance with the Federal Land Policy and Management Act (1976) and the Federal Advisory Committee Act (1972), the U.S. Department of the Interior, Bureau of Land Management (BLM) Pinedale Anticline Working Group (PAWG) Reclamation Task Group (subcommittee) will meet in Pinedale, Wyoming, for a business meeting. Task Group meetings are open to the public.

DATES: The PAWG Reclamation Task Group will meet February 16, 2005, from 6 p.m. until 8 p.m.

ADDRESSES: The meetings of the PAWG Reclamation Task Group will be held in the Lovatt Room at the Sublette County Library. The Sublette County Library is located at 155 South Tyler Avenue, in Pinedale.

FOR FURTHER INFORMATION CONTACT: Dessa Dale, BLM/Reclamation TG Liaison, Bureau of Land Management, Pinedale FO, 432 E. Mill Street, PO Box 768, Pinedale WY 82941; 307–367–5321.

SUPPLEMENTARY INFORMATION: The Pinedale Anticline Working Group (PAWG) was authorized and established with release of the Record of Decision (ROD) for the Pinedale Anticline Oil and Gas Exploration and Development Project on July 27, 2000. The PAWG advises the BLM on the development and implementation of monitoring plans and adaptive management decisions as development of the Pinedale Anticline Natural Gas Field (PAPA) proceeds for the life of the field.

After the ROD was issued, Interior determined that a Federal Advisory Committees Act (FACA) charter was required for this group. The charter was signed by Secretary of the Interior, Gale Norton, on August 15, 2002, and renewed on August 13, 2004. An announcement of committee initiation and call for nominations was published in the **Federal Register** on February 21, 2003, (68 FR 8522). PAWG members were appointed by Secretary Norton on May 4, 2004.

At their second business meeting, the PAWG established seven resource-or activity-specific Task Groups, including one for Reclamation. Public participation on the Task Groups was solicited through the media, letters, and word-of-mouth.

The agenda for this meeting will include information gathering and discussion related to developing a reclamation monitoring plan to assess the impacts of development in the Pinedale Anticline gas field, and identifying who will do and who will pay for the monitoring. Task Group recommendations are due to the PAWG in February, 2005. At a minimum, public comments will be heard just prior to adjournment of the meeting.

Dated: January 5, 2005.

Priscilla E. Mecham,

Field Office Manager.

[FR Doc. 05–681 Filed 1–12–05; 8:45 am]

BILLING CODE 4310–22–P

DEPARTMENT OF THE INTERIOR

Bureau of Land Management

[OR–010–1020–PK; HAG 05–0044]

Meeting Notice for the Southeast Oregon Resource Advisory Council

AGENCY: Bureau of Land Management (BLM), Lakeview District, Interior.

ACTION: Meeting notice for the Southeast Oregon Resource Advisory Council.

SUMMARY: The Southeast Oregon Resource Advisory Council (SEORAC) will hold a meeting for all members from 8 a.m. to 5 p.m. Pacific Time (PT), Monday, February 7, 2005 and 8 a.m. to noon (PT) on Tuesday, February 8, 2005 at the Fremont-Winema National Forests, Winema Office, Conference Room, 2819 Dahlia Street, Klamath Falls, Oregon 97601. Members of the public may attend the meeting in person.

The meeting topics that may be discussed by the Council include a discussion of issues within Southeast Oregon related to: Election of Officers, Role and Responsibilities of RAC members; Approval of past minutes, 2005 Calendar Dates; RAC Charter Changes. Work Plan Priorities, Update of the Oregon Sage-grouse Plan. Hydrology Presentation, Owyhee River below the dam update, North Lake Recreation Plan update, Wild Horse and Burro update, Fremont-Winema National Forests grazing program update, liaison reports and Federal Official reports. Discussion of the subcommittee priorities and roles, meeting of subcommittees and other issues that may come before the Council.

Information to be distributed to the Council members is requested in written format 10 days prior to the Council meeting. Public comment is scheduled for 11:45 a.m. (PT) on Monday February 7, 2005.

FOR FURTHER INFORMATION CONTACT: Additional information concerning the SEORAC meeting may be obtained from Pam Talbott, Contact Representative, Lakeview Interagency Office, 1301 South G Street, Lakeview, OR 97630 (541) 947–6107, or *ptalbott@or.blm.gov* and/or from the following Web site *http://www.or.blm.gov/SEOR-RAC.*

Dated: January 6, 2005.

M. Joe Tague,

Acting District Manager.

[FR Doc. 05–708 Filed 1–12–05; 8:45 am]

BILLING CODE 4310–33–P

DEPARTMENT OF THE INTERIOR

Bureau of Land Management

[WY–920–1310–01; WYW145713]

Notice of Proposed Reinstatement of Terminated Oil and Gas Lease

AGENCY: Bureau of Land Management, Interior.

ACTION: Notice of proposed reinstatement and rental/royalty reduction of terminated oil and gas lease.

SUMMARY: Under the provisions of 30 U.S.C. 188(d) and (e), and 43 CFR 3108.2–3(a) and (b)(1), the Bureau of Land Management (BLM) received a petition for reinstatement of oil and gas lease WYW145713 for lands in Big Horn County, Wyoming. The petition was filed on time and was accompanied by all the rentals due since the date the lease terminated under the law.

FOR FURTHER INFORMATION CONTACT: Bureau of Land Management, Pamela J. Lewis, Chief, Fluid Minerals Adjudication, at (307) 775–6176.

SUPPLEMENTARY INFORMATION: The lease has been granted a rental and royalty reduction at rate of $2.00 per acre, or fraction thereof, per year and 12½ percent, respectively. The lessee has paid the required $500 administrative fee and $166 to reimburse the Department for the cost of this **Federal Register** notice. The lessee has met all the requirements for reinstatement of the lease as set out in Section 31 (d) and (e) of the Mineral Lands Leasing Act of 1920 (30 U.S.C. 188), and the Bureau of Land Management is proposing to reinstate lease WYW145713 effective August 1, 2003, under the original terms and conditions of the lease, rates cited above. BLM has not issued a valid lease affecting the lands.

Pamela J. Lewis,

Chief, Fluid Minerals Adjudication.

[FR Doc. 05–699 Filed 1–12–05; 8:45 am]

BILLING CODE 4310–22–P

DEPARTMENT OF THE INTERIOR

Bureau of Land Management

[WY–920–1310–01; WYW145692]

Notice of Proposed Reinstatement of Terminated Oil and Gas Lease

AGENCY: Bureau of Land Management, Interior.

ACTION: Notice of proposed reinstatement and rental/royalty reduction of terminated oil and gas lease.

SUMMARY: Under the provisions of 30 U.S.C. 188(d) and (e), and 43 CFR 3108.2–3(a) and (b)(1), the Bureau of Land Management (BLM) received a petition for reinstatement of oil and gas lease WYW145692 for lands in Big Horn County, Wyoming. The petition was filed on time and was accompanied by all the rentals due since the date the lease terminated under the law.

FOR FURTHER INFORMATION CONTACT: Bureau of Land Management, Pamela J. Lewis, Chief, Fluid Minerals Adjudication, at (307) 775–6176.

SUPPLEMENTARY INFORMATION: The lease has been granted a rental and royalty reduction at rate of $2.00 per acre, or fraction thereof, per year and 12½ percent, respectively. The lessee has paid the required $500 administrative fee and $166 to reimburse the Department for the cost of this **Federal Register** notice. The lessee has met all the requirements for reinstatement of the lease as set out in section 31 (d) and (e) of the Mineral Lands Leasing Act of 1920 (30 U.S.C. 188), and the Bureau of Land Management is proposing to reinstate lease WYW145692 effective August 1, 2003, under the original terms and conditions of the lease, rates cited above. BLM has not issued a valid lease affecting the lands.

Pamela J. Lewis,

Chief, Fluid Minerals Adjudication.

[FR Doc. 05–700 Filed 1–12–05; 8:45 am]

BILLING CODE 4310–22–P

DEPARTMENT OF THE INTERIOR

Bureau of Land Management

[WY–920–1310–01; WYW145696]

Notice of Proposed Reinstatement of Terminated Oil and Gas Lease

AGENCY: Bureau of Land Management, Interior.

ACTION: Notice of Proposed Reinstatement and Rental/Royalty Reduction of Terminated Oil and Gas Lease.

SUMMARY: Under the provisions of 30 U.S.C. 188(d) and (e), and 43 CFR 3108.2–3(a) and (b)(1), the Bureau of Land Management (BLM) received a petition for reinstatement of oil and gas lease WYW145696 for lands in Big Horn County, Wyoming. The petition was filed on time and was accompanied by all the rentals due since the date the lease terminated under the law.

FOR FURTHER INFORMATION CONTACT: Bureau of Land Management, Pamela J. Lewis, Chief, Fluid Minerals Adjudication, at (307) 775–6176.

SUPPLEMENTARY INFORMATION: The lease has been granted a rental and royalty reduction at rate of $2.00 per acre, or fraction thereof, per year and 12½ percent, respectively. The lessee has paid the required $500 administrative fee and $166 to reimburse the Department for the cost of this **Federal Register** notice. The lessee has met all the requirements for reinstatement of the lease as set out in section 31(d) and (e) of the Mineral Lands Leasing Act of 1920 (30 U.S.C. 188), and the Bureau of Land Management is proposing to reinstate lease WYW145696 effective August 1, 2003, under the original terms and conditions of the lease, rates cited above. BLM has not issued a valid lease affecting the lands.

Pamela J. Lewis,

Chief, Fluid Minerals Adjudication.

[FR Doc. 05–701 Filed 1–12–05; 8:45 am]

BILLING CODE 4310–22–P

DEPARTMENT OF THE INTERIOR

Bureau of Land Management

[WY–920–1310–01; WYW96788]

Notice of Proposed Reinstatement of Terminated Oil and Gas Lease

AGENCY: Bureau of Land Management, Interior.

ACTION: Notice of proposed reinstatement of terminated oil and gas lease.

SUMMARY: Under the provisions of 30 U.S.C. 188(d) and (e), and 43 CFR 3108.2–3(a) and (b)(1), the Bureau of Land Management (BLM) received a petition for reinstatement of oil and gas lease WYW96788 for lands in Converse County, Wyoming. The petition was filed on time and was accompanied by all the rentals due since the date the lease terminated under the law.

FOR FURTHER INFORMATION CONTACT: Bureau of Land Management, Pamela J. Lewis, Chief, Fluid Minerals Adjudication, at (307) 775–6176.

SUPPLEMENTARY INFORMATION: The lessees have agreed to the amended lease terms for rentals and royalties at rates of $5.00 per acre or fraction thereof, per year and 16⅔ percent, respectively. The lessees have paid the required $500 administrative fee and $166 to reimburse the Department for the cost of this **Federal Register** notice. The lessees have met all the requirements for reinstatement of the lease as set out in section 31(d) and (e) of the Mineral Lands Leasing Act of 1920 (30 U.S.C. 188), and the Bureau of Land Management is proposing to reinstate lease WYW96788 effective July 1, 2003, under the original terms and conditions of the lease and the increased rental and royalty rates cited above. BLM has not issued a valid lease affecting the lands.

Pamela J. Lewis,

Chief, Fluid Minerals Adjudication.

[FR Doc. 05–702 Filed 1–12–05; 8:45 am]

BILLING CODE 4310–22–P

DEPARTMENT OF THE INTERIOR

Bureau of Land Management

[AZ–330–05–1232–EA, AZ–SRP–330–05–01 and AZ–SRP–330–05–02]

Temporary Closure of Selected Public Lands in La Paz County, Arizona, During the Operation of the 2005 Parker 425 Desert Race

AGENCY: Bureau of Land Management, Interior.

ACTION: Notice.

SUMMARY: The Bureau of Land Management Lake Havasu Field Office announces the temporary closure of selected public lands under its administration in La Paz County, Arizona. This action is being taken to help ensure public safety and prevent unnecessary environmental degradation during the officially permitted running of the 2005 Blue Water Resort and Casino Parker 425 Desert Race. Areas subject to this closure include all public land, including county maintained roads and highways located on public lands, that are located within two miles of the designated racecourse. The racecourse and closure areas are described in the **SUPPLEMENTARY INFORMATION** section of this notice, and maps of the designated racecourse are maintained in the Bureau of Land Management Lake Havasu Field Office, 2610 Sweetwater Avenue, Lake Havasu City, AZ 86406.

DATES: Blue Water Resort and Casino Parker 425 on February 5, 2005.

FOR FURTHER INFORMATION CONTACT: Bryan Pittman, Field Staff Law Enforcement Ranger, BLM Lake Havasu Field Office, 2610 Sweetwater Avenue, Lake Havasu City, Arizona 86406, (928) 505–1200.

SUPPLEMENTARY INFORMATION:

Description of Race Course Closed Area: Beginning at the eastern boundary of the Colorado River Indian Tribe (CRIT) Reservation, it runs east along Shea Road, then east along the Parker-Swansea Road to the Central Arizona Project Canal (CAP), then north on the west side of the CAP Canal, crossing the canal on the county-maintained road, running northeast into Mineral Wash Canyon, then southeast on the county-maintained road, through the four-corners intersection to Midway, then east on Transmission Pass Road, through State Trust lands located in Butler Valley, turning north into Cunningham Wash to North Tank; continuing back south to the Transmission Pass Road and east (reentering public land) within two miles of Alamo Dam Road. Turns south and west onto the wooden power line road, onto the State Trust lands in Butler Valley, turning southwest into Cunningham Wash to the Graham Well, intersecting Butler Valley Road, then north and west onto public lands proceeding west to the ''Bouse Y'' intersection, located two miles north of Bouse, Arizona. The route then proceeds north, paralleling the Bouse-Midway Road to the Midway Pit. From Midway, it goes west on the north boundary road of the East Cactus Plain Wilderness Area to Parker-Swansea Road. The route then goes west in Osborne Wash, south of the Parker-Swansea Road to the CAP Canal, along the north boundary of the Cactus Plain Wilderness Study Area, staying in Osborne Wash, it proceeds west in Osborne Wash to the CRIT Reservation boundary.

Times of the Temporary Land Closure: The Blue Water Resort and Casino Parker 425 Desert Race closure is in effect from 2 p.m. (m.s.t.) on Friday, February 4, 2005, through 11:59 p.m. (m.s.t.) on Saturday, February 5, 2004.

Prohibited Acts

The following acts are prohibited during the temporary land closure:

1. Being present on, or driving on, the designated racecourse. This does not apply to race participants, race officials and emergency vehicles.

2. Vehicle parking or stopping in areas affected by the closure, except where such is specifically allowed (designated spectator areas).

3. Camping in any area, except in the designated spectator areas.

4. Discharge of firearms.

5. Possession or use of any fireworks.

6. Cutting or collecting firewood of any kind, including dead and down wood or other vegetative material.

7. Operating any vehicle (except registered race vehicles), including off-highway vehicles, not registered and equipped for street and highway operation.

8. Operating any vehicle in the area of the closure at a speed of more than 35 mph. This does not apply to registered race vehicles during the race, while on the designated racecourse.

9. Failure to obey any official sign posted by the Bureau of Land Management, LaPaz County, or the race promoter.

10. Parking any vehicle in a manner that obstructs or impedes normal traffic movement.

11. Failure to obey any person authorized to direct traffic, including law enforcement officers and designated race officials.

12. Failure to observe Spectator Area quiet hours of 10 p.m. to 6 a.m.

13. Failure to keep campsite or race viewing site free of trash and litter.

14. Allowing any pet or other animal to be unrestrained by a leash of not more than 6 feet in length.

The above restrictions do not apply to emergency vehicles and vehicles owned by the United States, the State of Arizona, or La Paz County. Authority for closure of public lands is found in 43 CFR part 8340, subpart 8341; 43 CFR part 8360, subpart 8364.1; and 43 CFR part 2930. Persons who violate this closure order are subject to arrest, and upon conviction may be fined not more than $100,000 and/or imprisoned for not more than 12 months.

Robert M. Henderson,

Acting Field Manager, Lake Havasu Field Office.

[FR Doc. 05–731 Filed 1–12–05; 8:45 am]

BILLING CODE 4310–32–P

INTERNATIONAL TRADE COMMISSION

[Investigation No. 731–TA–125 (Second Review)]

Potassium Permanganate From China

AGENCY: United States International Trade Commission.

ACTION: Scheduling of an expedited five-year review concerning the antidumping duty order on potassium permanganate from China.

SUMMARY: The Commission hereby gives notice of the scheduling of an expedited review pursuant to section 751(c)(3) of the Tariff Act of 1930 (19 U.S.C. 1675(c)(3)) (the Act) to determine whether revocation of the antidumping duty order on potassium permanganate from China would be likely to lead to continuation or recurrence of material injury within a reasonably foreseeable time. For further information concerning the conduct of this review and rules of general application, consult the Commission's Rules of Practice and Procedure, part 201, subparts A through E (19 CFR part 201), and part 207, subparts A, D, E, and F (19 CFR part 207).

EFFECTIVE DATE: January 4, 2005.

FOR FURTHER INFORMATION CONTACT: Fred Ruggles (202) 205–3187 or *fred.ruggles@usitc.gov*), Office of Investigations, U.S. International Trade Commission, 500 E Street, SW., Washington, DC 20436. Hearing-impaired persons can obtain information on this matter by contacting the Commission's TDD terminal on (202) 205–1810. Persons with mobility impairments who will need special assistance in gaining access to the Commission should contact the Office of the Secretary at (202) 205–2000. General information concerning the Commission may also be obtained by accessing its Internet server *http://www.usitc.gov.* The public record for this review may be viewed on the Commission's electronic docket (EDIS) at *http://edis.usitc.gov.*

SUPPLEMENTARY INFORMATION:

Background

On January 4, 2005, the Commission determined that the domestic interested party group response to its notice of institution (69 FR 58955, October 1, 2004) of the subject five-year review was adequate and that the respondent interested party group response was inadequate. The Commission did not find any other circumstances that would warrant conducting a full review.[1] Accordingly, the Commission determined that it would conduct an expedited review pursuant to section 751(c)(3) of the Act.

Staff Report

A staff report containing information concerning the subject matter of the review will be placed in the nonpublic record on January 31, 2005, and made available to persons on the Administrative Protective Order service list for this review. A public version will be issued thereafter, pursuant to section 207.62(d)(4) of the Commission's rules.

Written Submissions

As provided in section 207.62(d) of the Commission's rules, interested parties that are parties to the review and that have provided individually adequate responses to the notice of institution,[2] and any party other than an interested party to the review may file written comments with the Secretary on what determination the Commission should reach in the review. Comments are due on or before February 3, 2005 and may not contain new factual information. Any person that is neither a party to the five-year review nor an interested party may submit a brief written statement (which shall not contain any new factual information) pertinent to the review by February 3, 2005. However, should the Department of Commerce extend the time limit for its completion of the final results of its review, the deadline for comments (which may not contain new factual information) on Commerce's final results is three business days after the issuance of Commerce's results. If comments contain business proprietary information (BPI), they must conform with the requirements of sections 201.6, 207.3, and 207.7 of the Commission's rules. The Commission's rules do not authorize filing of submissions with the Secretary by facsimile or electronic means, except to the extent permitted by section 201.8 of the Commission's rules, as amended, 67 FR 68036 (November 8, 2002).

In accordance with sections 201.16(c) and 207.3 of the rules, each document filed by a party to the review must be served on all other parties to the review (as identified by either the public or BPI service list), and a certificate of service must be timely filed. The Secretary will not accept a document for filing without a certificate of service.

Authority: This review is being conducted under authority of title VII of the Tariff Act of 1930; this notice is published pursuant to section 207.62 of the Commission's rules.

Issued: January 10, 2005.

By order of the Commission.

Marilyn R. Abbott,

Secretary to the Commission.

[FR Doc. 05–738 Filed 1–12–05; 8:45 am]

BILLING CODE 7020–02–P

[1] A record of the Commissioners' votes, the Commission's statement on adequacy, and any individual Commissioner's statements will be available from the Office of the Secretary and at the Commission's Web site.

[2] The Commission has found the response submitted by Carus Chemical Co. to be adequate. Comments from other interested parties will not be accepted (*see* 19 CFR 207.62(d)(2)).

INTERNATIONAL TRADE COMMISSION

[Investigation No. TA–2104–18]

U.S.-Central America Free Trade Agreement: Potential Economywide and Selected Sectoral Effects

AGENCY: United States International Trade Commission.

ACTION: Notice of termination of investigation.

EFFECTIVE DATE: January 10, 2005.

SUMMARY: On January 5, 2005, the Commission received a letter from the Office of the United States Trade Representative (USTR) stating that the USTR has withdrawn his request for a Commission report, pursuant to section 2104(f) of the Trade Act of 2002 (19 U.S.C. 3804(f)), assessing the likely impact of a free trade agreement (FTA) with Costa Rica, El Salvador, Guatemala, Honduras, and Nicaragua (Central America). Accordingly, the Commission has terminated investigation No. TA–2104–18, *U.S.-Central America Free Trade Agreement: Potential Economywide and Selected Sectoral Effects,* which was instituted pursuant to that request. The public hearing in this investigation, scheduled for January 18, 2005, is canceled.

Background: The Commission instituted the investigation following receipt of a request from the USTR on November 17, 2004. The Commission published notice of institution of the investigation in the **Federal Register** on December 28, 2004 (69 FR 77778). The January 5, 2005, letter from USTR noted that the USTR had requested the report in light of the fact that the Dominican Republic had enacted a tax on beverages sweetened with high fructose corn syrup (HFCS) that the United States regarded as incompatible with the Dominican Republic's obligations under the FTA that the United States had entered into with Central America and the Dominican Republic on August 5, 2004 (and on which the Commission had already provided a report). The letter stated that the Dominican Republic repealed the tax on December 29, 2004.

By order of the Commission.

Issued: January 10, 2005.

Marilyn R. Abbott,

Secretary to the Commission.

[FR Doc. 05–809 Filed 1–12–05; 8:45 am]

BILLING CODE 7020–02–P

NATIONAL SCIENCE FOUNDATION

Sunshine Act Meeting

Agency Holding Meeting: National Science Board, Committee on Education and Human Resources.

DATE AND TIME: January 18, 2005, 10 a.m. (ET).

PLACE: The National Science Foundation, 4201 Wilson Boulevard, Room 110, Arlington, VA 22230, *http://www.nsf.gov/nsb.*

STATUS: This meeting will be open to the public.

MATTERS TO BE CONSIDERED:

Tuesday, January 18, 2005 Open Session

Open Session (10 a.m. to 11 a.m.)

Discussion of the charge for an Industry panel on the S&E workforce.

FOR FURTHER INFORMATION CONTACT: Dr. Michael P. Crosby, Executive Officer and NSB Office Director, (703) 292–7000, *http://www.nsf.gov/nsb.*

Michael P. Crosby,

Executive Officer and NSB Office Director.

[FR Doc. 05–862 Filed 1–11–05; 2:33 pm]

BILLING CODE 7555–01–P

NUCLEAR REGULATORY COMMISSION

Atomic Safety and Licensing Board

[Docket No. 70–3103–ML; ASLBP No. 04–826–01–ML]

Memorandum and Order; Notice of Hearing and of Opportunity To Make Oral or Written Limited Appearance Statements

January 7, 2005.

In the Matter of Louisiana Energy Services, L.P., (National Enrichment Facility); Before Administrative Judges: G. Paul Bollwerk, III, Chairman, Dr. Paul B. Abramson, Dr. Charles N. Kelber.

The Atomic Safety and Licensing Board hereby gives notice that it will convene an evidentiary hearing to receive testimony and exhibits and allow the cross-examination of witnesses relating to certain matters at issue in this proceeding regarding the December 2003 application of Louisiana Energy Services, L.P., (LES) for a license under 10 CFR part 70 to construct and operate a uranium enrichment facility—the National Enrichment Facility (NEF)—to be constructed near Eunice, New Mexico. In addition, the Board gives notice that, in accordance with 10 CFR 2.315(a), it will entertain oral limited appearance statements from members of the public in connection with this proceeding.

A. Date, Time, and Location of Evidentiary Hearing

The Board will conduct an evidentiary hearing on certain environmental contentions (ECs) relating to this proceeding, currently scheduled to include contentions NIRS/PC EC–1—Impacts upon Ground and Surface Water; NIRS/PC EC–2—Impact upon Water Supplies; NIRS/PC EC–4—Impacts of Waste Storage; NIRS/PC EC–7—Need for the Facility, beginning on Monday, February 7, 2005, at 9:30 a.m., in the Lea County Event Center, 5101 Lovington Highway, Hobbs, New Mexico. The hearing on these issues will continue day-to-day until concluded.

The public is advised that, in accordance with 10 CFR 2.390, part of the sessions regarding each of the contentions may be closed to the public because the matters at issue may involve the discussion of protected information.

B. Date, Time, and Location of Oral Limited Appearance Statement Sessions

These sessions will be on the following date at the specified location and times:

1. *Date:* Saturday, February 12, 2005; *Time:* Morning Session (if there is sufficient interest)—10 a.m. to noon mountain standard time (m.s.t.).; *Location:* Eunice Community Center, 1115 Avenue I, Eunice, New Mexico.

2. *Date:* Saturday, February 12, 2005; *Time:* Afternoon Session (if there is sufficient interest)—2 to 4 p.m. m.s.t.; *Location:* Same as Session 1 above.

C. Participation Guidelines for Oral Limited Appearance Statements

Any person not a party, or the representative of a party, to the proceeding will be permitted to make an oral statement setting forth his or her position on matters of concern relating to this proceeding. Although these statements do not constitute testimony or evidence, they nonetheless may help the Board and/or the parties in their consideration of the issues in this proceeding.

Oral limited appearance statements will be entertained during the hours specified above, or such lesser time as may be necessary to accommodate the speakers who are present.[1] In this

[1] Any members of the public who plan to attend either the evidentiary hearings or the limited appearance sessions are strongly advised to arrive early to allow time to pass through any security

Continued

regard, if all scheduled and unscheduled speakers present at a session have made a presentation, the Licensing Board reserves the right to terminate the session before the ending times listed above. The Licensing Board also reserves the right to cancel the Saturday morning and/or afternoon sessions scheduled above if there has not been a sufficient showing of public interest as reflected by the number of preregistered speakers.

The time allotted for each statement normally will be no more than five minutes, but may be further limited depending on the number of written requests to make an oral statement that are submitted in accordance with section D below and/or the number of persons present at the designated times. In addition, although an individual may request an opportunity to speak at more than one session, the Licensing Board reserves the right to defer an additional presentation by the same individual until after it has heard from speakers who have not had an opportunity to make an initial presentation.

Finally, the Board anticipates holding additional oral limited appearance statement sessions in the Hobbs, New Mexico area in conjunction with the evidentiary hearings currently scheduled for October and November 2005. The Board will make further information regarding those sessions available as the time for those hearings draws near.

D. Submitting a Request To Make an Oral Limited Appearance Statement

Persons wishing to make an oral statement who have submitted a timely written request to do so will be given priority over those who have not filed such a request. To be considered timely, a written request to make an oral statement must either be mailed, faxed, or sent by e-mail so as to be received by noon e.s.t. on Thursday, February 3, 2005. The request must specify the session (morning or afternoon) during which the requester wishes to make an oral statement. Based on its review of the requests received by February 3, 2005, the Licensing Board may decide that the Saturday morning and/or afternoon sessions will not be held due to a lack of adequate interest in those sessions.

Written requests to make an oral statement should be submitted to:

Mail: Office of the Secretary, Rulemakings and Adjudications Staff, U.S. Nuclear Regulatory Commission, Washington, DC 20555–0001.

Fax: (301) 415–1101 (verification (301) 415–1966).

E-mail: hearingdocket@nrc.gov.

In addition, using the same method of service, a copy of the written request to make an oral statement should be sent to the Chairman of this Licensing Board as follows:

Mail: Administrative Judge G. Paul Bollwerk, III, Atomic Safety and Licensing Board Panel, Mail Stop T–3F23, U.S. Nuclear Regulatory Commission, Washington, DC 20555–0001.

Fax: (301) 415–5599 (verification (301) 415–7405).

E-mail: ksv@nrc.gov and *gpb@nrc.gov*.

E. Submitted Written Limited Appearance Statements

A written limited appearance statement may be submitted to the Board regarding this proceeding at any time. Such statements should be sent to the Office of the Secretary using one of the methods prescribed above, with a copy to the Licensing Board Chairman.

F. Availability of Documentary Information Regarding the Proceeding

Documents relating to this proceeding are available for public inspection at the Commission's Public Document Room (PDR), located at One White Flint North, 11555 Rockville Pike (first floor), Rockville, Maryland, or electronically from the publicly available records component of NRC's document system (ADAMS). ADAMS is accessible from the NRC Web site at *http://www.nrc.gov/reading-rm/adams.html* (the Public Electronic Reading Room).[2] Persons who do not have access to ADAMS or who encounter problems in accessing the documents located in ADAMS should contact the NRC PDR reference staff by telephone at (800) 397–4209 or (301) 415–4737, or by e-mail to *pdr@nrc.gov*.

G. Scheduling Information Updates

Any updated/revised scheduling information regarding the evidentiary hearing and limited appearance sessions can be found on the NRC Web site at *http://www.nrc.gov/public-involve/public-meetings/index.cfm* or by calling (800) 368–5642, extension 5036, or (301) 415–5036.

It is so ordered.

Dated: January 7, 2005, Rockville, Maryland.

For the Atomic Safety and Licensing Board.[3]

G. Paul Bollwerk III,

Administrative Judge.

[FR Doc. 05–691 Filed 1–12–05; 8:45 am]

BILLING CODE 7590–01–P

NUCLEAR REGULATORY COMMISSION

[Docket Nos. 30–5980–EA and 30–5982–EA; ASLBP No. 05–835–01–EA]

Safety Light Corporation; Establishment of Atomic Safety and Licensing Board

Pursuant to delegation by the Commission dated December 29, 1972, published in the **Federal Register**, 37 FR 28710 (1972), and the Commission's regulations, *see* 10 CFR 2.104, 2.202, 2.300, 2.303, 2.309, 2.311, 2.318, and 2.321, notice is hereby given that an Atomic Safety and Licensing Board is being established to preside over the following proceeding: Safety Light Corporation, Bloomsburg, Pennsylvania Site, (Materials License Suspension).

This proceeding concerns a request for hearing submitted on December 29, 2004, by Safety Light Corporation (SLC) in response to a December 10, 2004, order from the Director of the NRC Office of Nuclear Material Safety and Safeguards suspending SLC's two byproduct materials licenses, effective immediately. In addition, in a December 29, 2004 motion, SLC asked that the immediate effectiveness of the NRC staff order suspending SLC's licenses be set aside.

The Board is comprised of the following administrative judges:

E. Roy Hawkens, Chair, U.S. Nuclear Regulatory Commission, Washington, DC 20555–0001;

Alan S. Rosenthal, U.S. Nuclear Regulatory Commission, Washington, DC 20555–0001;

Dr. Peter S. Lam, U.S. Nuclear Regulatory Commission, Washington, DC 20555–0001.

All correspondence, documents, and other materials shall be filed with the administrative judges in accordance with 10 CFR 2.302.

---

measures that may be employed. Attendees are also requested not to bring any unnecessary hand-carried items, such as packages, briefcases, backpacks, or other items that might need to be examined individually. Items that could readily be used as weapons will not be permitted in the rooms where these sessions will be held. Also, during these sessions, signs no larger than 18″ by 18″ will be permitted, but may not be attached to sticks, held up, or moved about in the rooms.

[2] Some documents determined to contain ''sensitive'' are publicly available only in redacted form; non-sensitive documents are publicly available in their complete form.

[3] Copies of this memorandum and order were sent this date by Internet e-mail transmission to counsel for (1) applicant Louisiana Energy Services, Inc.; (2) intervenors New Mexico Environment Department, the Attorney General of New Mexico, and Nuclear Information and Resource Service/Public Citizen; and (3) the NRC staff.

Issued in Rockville, Maryland, this 7th day of January 2005.

G. Paul Bollwerk, III,

Chief Administrative Judge, Atomic Safety and Licensing Board Panel.

[FR Doc. 05–692 Filed 1–12–05; 8:45 am]

BILLING CODE 7590–01–P

SECURITIES AND EXCHANGE COMMISSION

[File No. 1–14258]

Issuer Delisting; Notice of Application of Premier Farnell Plc To Withdraw Its Ordinary Shares, (5 pence each) (''Ordinary Shares''), Its $1.35 and 89.2p Cumulative Convertible Redeemable Preference Shares (£1 each) (''Preference Shares''), and the American Depositary Shares Representing the Ordinary Shares and Preference Shares, From Listing and Registration on the New York Stock Exchange, Inc.

January 7, 2005.

On December 10, 2004, Premier Farnell Plc., a company incorporated under the law of England and Wales (''Issuer''), filed an application with the Securities and Exchange Commission (''Commission''), pursuant to Section 12(d) of the Securities Exchange Act of 1934 (''Act'') [1] and Rule 12d2–2(d) thereunder,[2] to withdraw its ordinary shares (5 pence each) (''ordinary shares''), its $1.35 and 89.2p cumulative convertible redeemable preference shares (£1 each) (''preference shares''), and the American Depository Shares (''ADS'') representing both the ordinary shares and preference shares (collectively ''Securities''), from listing and registration on the New York Stock Exchange, Inc. (''NYSE'' or ''Exchange'').

The Board of Directors (''Board'') of the Issuer unanimously approved a resolution on December 7, 2004 to withdraw the Issuer's Securities from listing on the NYSE. The Board states that the following reasons factored into its decision to withdraw the Securities from the Exchange. First, the Issuer's U.S. shareholder base has reduced considerably since the listing of its Securities on the NYSE and registration of such Securities with the Commission in 1996. Trading of the ADS on the NYSE has declined considerably since the listing. According to Thomas Financial Datastream, the average daily trading volume of the ordinary shares ADS from April 12, 1996, the first day of their trading, to February 2, 1997, the Issuer's financial year end, was 70,900. The average daily trading volume during the financial year ended February 1, 2004 was 13,200, and between that financial year end and November 29, 2004 was approximately 15,400. The average daily trading volume of the preference shares ADS from April 12, 1996 to February 2, 1997 was 84,900. The average daily trading volume during the financial year ended February 1, 2004 was 1,600, and between the financial year end and November 29, 2004 was approximately 800. These declines have caused the Issuer to re-evaluate the merits of maintaining its NYSE listing and Commission registration. Next, as a result of this re-evaluation, the Issuer has decided to apply to terminate its NYSE listing now and may, in the future, seek to de-register from the Commission if eligible to do so. Since 1996, the burden and expense of complying with U.S. reporting and registration obligations has increased and would substantially increase further by virtue of the new Commission rules under the Sarbanes-Oxley Act relating to internal financial control documentation. Finally, the costs of maintaining the Issuer's NYSE listing and Commission registration, including the costs of management time required, for the year ending January 29, 2006 would be approximately £1.3 million. These costs do not take account of the opportunity cost to the Issuer of the management effort that would be required to be dedicated to meeting the internal control documentation requirements. This would include delays to other business initiatives. The Issuer states that the ordinary shares and preference shares will continue to be listed on the London Stock Exchange, their principal trading market.

The Issuer states in its application that it has complied with the NYSE's rules governing an issuer's voluntary withdrawal of a security from listing and registration by complying with all applicable laws in effect in England and Wales, the jurisdiction in which the Issuer is incorporated.

The issuer's application relates solely to the Securities' withdrawal from listing on the NYSE and from registration under Section 12(b) of the Act,[3] and shall not affect its obligation to be registered under Section 12(g) of the Act.[4]

Any interested person may, on or before February 3, 2005, comment on the facts bearing upon whether the application has been made in accordance with the rules of the NYSE, and what terms, if any, should be imposed by the Commission for the protection of investors. All comment letters may be submitted by either of the following methods:

Electronic Comments

- Send an e-mail to *rule-comments@sec.gov.* Please include the File Number 1–14258 or;

Paper Comments

- Send paper comments in triplicate to Jonathan G. Katz, Secretary, Securities and Exchange Commission, 450 Fifth Street, NW., Washington, DC 205409–0609.

All submissions should refer to File Number 1–14258. This file number should be included on the subject line if e-mail is used. To help us process and review your comments more efficiently, please use only one method. The Commission will post all comments on the Commission's Internet Web site (*http://www.sec.gov/rules/delist.shtml*). Comments are also available for public inspection and copying in the Commission's Public Reference Room, 450 Fifth Street, NW., Washington, DC 20549. All comments received will be posted without change; we do not edit personal identifying information from submissions. You should submit only information that you wish to make available publicly.

The Commission, based on the information submitted to it, will issue an order granting the application after the date mentioned above, unless the Commission determines to order a hearing on the matter.

For the Commission, by the Division of Market Regulation, pursuant to delegated authority.[5]

Jonathan G. Katz,

Secretary.

[FR Doc. 05–704 Filed 1–12–05; 8:45 am]

BILLING CODE 8010–01–M

[1] 15 U.S.C. 78*l*(d).

[2] 17 CFR 240.12d2–2(d).

[3] 15 U.S.C. 78*l*(b).

[4] 15 U.S.C. 78*l*(g).

[5] 17 CFR 200.30–3(a)(1).

SECURITIES AND EXCHANGE COMMISSION

[Release No. 34–50973; File No. SR–OPRA–2004–06]

Options Price Reporting Authority; Order Approving an Amendment to the Plan for Reporting of Consolidated Options Last Sale Reports and Quotation Information To Amend Guideline 2 of the Capacity Guidelines Adopted in Accordance With the Plan

January 6, 2005.

On October 19, 2004, the Options Price Reporting Authority (''OPRA'') submitted to the Securities and Exchange Commission (''Commission''), pursuant to Section 11A of the Securities Exchange Act of 1934 (''Act'') [1] and Rule 11Aa3–2 thereunder,[2] an amendment to the Plan for Reporting of Consolidated Options Last Sale Reports and Quotation Information (''OPRA Plan'').[3] The proposed amendment would amend Guideline 2 of the Capacity Guidelines (''Guideline 2'') adopted in accordance with the Plan. Notice of the proposal was published in the **Federal Register** on December 9, 2004.[4] The Commission received no comment letters on the proposed OPRA Plan amendment. This order approves the proposal.

The first purpose of the proposed OPRA Plan amendment is to amend Guideline 2 to reduce the frequency of the capacity review cycle from a quarterly cycle to a cycle no less frequently than semi-annually. According to OPRA, based on the experience of the Independent System Capacity Advisor (''ISCA'') and the parties to the Plan, the quarterly cycle currently required by Guideline 2 fails to take into account the amount of time needed for the complete cycle of solicitation, discussion, revision, and review of these projections to be completed. Because of this, the ISCA suggested, and the parties to the Plan agreed, that a six-month cycle for the capacity projection and review process would be more realistic, while providing the ISCA with sufficiently current capacity projections to assure that the OPRA System would be able to meet the capacity needs of the parties as they may change from time to time.

The second purpose of the proposed amendment is to permit a party to the Plan to either increase or decrease the amount of additional capacity it is requesting once it has received the ISCA's initial cost estimates for OPRA System modifications to accommodate the capacity projections and requests of all of the parties. Currently, Guideline 2 does not contemplate that a party would be able to increase the amount of additional capacity it is requesting at this stage of the process.

After careful review, the Commission finds that the proposed OPRA Plan amendment is consistent with the requirements of the Act and the rules and regulations thereunder.[5] The Commission believes that the proposed OPRA Plan amendment is consistent with Section 11A of the Act [6] and Rule 11Aa3–2 thereunder [7] in that it is appropriate in the public interest, for the protection of investors and the maintenance of fair and orderly markets, to remove impediments to, and perfect the mechanisms of, a national market system.

Specifically, given the experience of the ISCA and the parties to the Plan, the Commission finds that it is appropriate to extend the capacity review cycle to no less frequently than semi-annually so as to provide the ISCA and the parties sufficient time to complete their cycle of solicitation, discussion, revision and review regarding capacity projections. Moreover, the Commission believes that permitting the parties to increase their requested capacity after receiving initial costs estimates from the ISCA should help to ensure that the various parties to the Plan have the flexibility they need in projecting and planning for their capacity needs.

It is therefore ordered, pursuant to Section 11A of the Act,[8] and Rule 11Aa3–2 thereunder,[9] that the proposed OPRA Plan amendment (SR–OPRA–2004–06) be, and it hereby is, approved.

For the Commission, by the Division of Market Regulation, pursuant to delegated authority.[10]

J. Lynn Taylor,

Assistant Secretary.

[FR Doc. E5–115 Filed 1–12–05; 8:45 am]

BILLING CODE 8010–01–P

[1] 15 U.S.C. 78k–1.

[2] 17 CFR 240.11Aa3–2.

[3] The OPRA Plan is a national market system plan approved by the Commission pursuant to Section 11A of the Act and Rule 11Aa3–2 thereunder. *See* Securities Exchange Act Release No. 17638 (March 18, 1981), 22 S.E.C. Docket 484 (March 31, 1981).

The OPRA Plan provides for the collection and dissemination of last sale and quotation information on options that are traded on the participant exchanges. The six participants to the OPRA Plan are the American Stock Exchange LLC, the Boston Stock Exchange, Inc., the Chicago Board Options Exchange, Inc., the International Securities Exchange, Inc., the Pacific Exchange, Inc., and the Philadelphia Stock Exchange, Inc.

[4] *See* Securities Exchange Act Release No. 50785 (December 2, 2004), 69 FR 71440.

[5] In approving this proposed OPRA Plan amendment, the Commission has considered its impact on efficiency, competition, and capital formation. 15 U.S.C. 78c(f).

[6] 15 U.S.C. 78k–1.

[7] 17 CFR 240.11Aa3–2.

[8] 15 U.S.C. 78k–1.

[9] 17 CFR 240.11Aa3–2.

[10] 17 CFR 200.30–3(29).

SECURITIES AND EXCHANGE COMMISSION

[Release No. 34–50988; File No. SR–Amex–2004–97]

Self-Regulatory Organizations; Notice of Filing and Immediate Effectiveness of Proposed Rule Change and Amendment No. 1 Thereto by the American Stock Exchange LLC To Reduce Options Transaction Fees for Exchange Specialists and Registered Options Traders

January 6, 2005.

Pursuant to Section 19(b)(1) of the Securities Exchange Act of 1934 (''Act''),[1] and Rule 19b–4 thereunder,[2] notice is hereby given that on December 2, 2004, the American Stock Exchange LLC (''Amex'' or ''Exchange'') filed with the Securities and Exchange Commission (''Commission'') the proposed rule change as described in Items I, II and III below, which Items have been prepared by the Exchange. On January 6, 2005, the Exchange filed Amendment No. 1 to the proposed rule change.[3] The Commission is publishing this notice to solicit comments on the proposed rule change, as amended, from interested persons.

I. Self-Regulatory Organization's Statement of the Terms of Substance of the Proposed Rule Change

The Exchange proposes to reduce the aggregate options transaction fee for Exchange specialists and registered options traders from $0.25 per contract side to $0.20 per contract side. The text of the proposed rule change is available at the Office of the Secretary, Amex, and at the Commission.

II. Self-Regulatory Organization's Statement of the Purpose of, and Statutory Basis for, the Proposed Rule Change

In its filing with the Commission, the Exchange included statements concerning the purpose of and basis for the proposed rule change and discussed

[1] 15 U.S.C. 78s(b)(1).

[2] 17 CFR 240.19b–4.

[3] *See* Form 19b–4 dated January 6, 2005 (''Amendment No. 1''). In Amendment No. 1, the Exchange clarified the effective date of the proposed fee change.

any comments it received on the proposed rule change. The text of these statements may be examined at the places specified in Item IV below. The Exchange has prepared summaries, set forth in Sections A, B, and C below, of the most significant aspects of such statements.

A. Self-Regulatory Organization's Statement of the Purpose of, and Statutory Basis for, the Proposed Rule Change

1. Purpose

The Exchange currently imposes transactions charges for transactions in equity options executed on the Exchange by Exchange specialists and Exchange registered options traders (''ROTs''). The current charges for Exchange specialist and ROTs in equity options are $0.25 per contract side, consisting of an options transaction fee of $0.15, an options comparison fee of $0.05 and an options floor brokerage fee of $0.05. The Exchange proposes to reduce the aggregate equity options transaction fee for Exchange specialists and ROTs from the current level of $0.25 per contract side to $0.20 per contract side effective December 2, 2004. Non-member market makers, *i.e.*, market makers registered in the same option class on another option exchange, will continue to be charged the current aggregate transaction fee of $0.30 per contract side. The new aggregate equity options transaction fee for Exchange specialists and ROTs will consist of an options transaction fee of $0.10 per contract side, an options comparison fee of $0.05 per contract side and options floor brokerage fee of $0.05 per contract side.

The Exchange believes that the proposed reduction in the equity options transaction fee will benefit the Exchange by providing greater incentive to Exchange specialists and ROTs to competitively quote their markets in comparison to the markets made by other options exchanges. The Exchange also believes that the reduction in the equity options transaction fee will help to maintain the existing floor operations of member firms at the Amex.

2. Statutory Basis

The Exchange believes that the proposed rule change is consistent with Section 6(b) of the Act [4] in general, and furthers the objectives of Section 6(b)(4) of the Act [5] in particular, regarding the equitable allocation of reasonable dues, fees and other charges among exchange members and other persons using exchange facilities.

B. Self-Regulatory Organization's Statement on Burden on Competition

The Exchange does not believe that the proposed rule change will impose any burden on competition that is not necessary or appropriate in furtherance of the purposes of the Act.

C. Self-Regulatory Organization's Statement on Comments on the Proposed Rule Change Received From Members, Participants or Others

The Exchange has neither solicited nor received written comments on the proposed rule change.

III. Date of Effectiveness of the Proposed Rule Change and Timing for Commission Action

The proposed rule change has become effective pursuant to Section 19(b)(3)(A)(ii) of the Act [6] and Rule 19b–4(f)(2) thereunder,[7] because the proposed rule change establishes or changes a due, fee or other charge applicable only to a member of the Exchange. At any time within 60 days of the filing of the proposed rule change, the Commission may summarily abrogate the rule change if it appears to the Commission that the action is necessary or appropriate in the public interest, for the protection of investors, or would otherwise further the purposes of the Act.[8]

IV. Solicitation of Comments

Interested persons are invited to submit written data, views, and arguments concerning the foregoing, including whether the proposed rule change is consistent with the Act. Comments may be submitted by any of the following methods:

Electronic Comments

- Use the Commission's Internet comment form (*http://www.sec.gov/rules/sro.shtml*); or
- Send an e-mail to *rule-comments@sec.gov*. Please include File Number SR–Amex–2004–97 on the subject line.

Paper Comments

- Send paper comments in triplicate to Jonathan G. Katz, Secretary, Securities and Exchange Commission, 450 Fifth Street, NW., Washington, DC 20549–0609.

All submissions should refer to File Number SR–Amex–2004–97. This file number should be included on the subject line if e-mail is used. To help the Commission process and review your comments more efficiently, please use only one method. The Commission will post all comments on the Commission's Internet Web site (*http://www.sec.gov/rules/sro.shtml*). Copies of the submission, all subsequent amendments, all written statements with respect to the proposed rule change that are filed with the Commission, and all written communications relating to the proposed rule change between the Commission and any person, other than those that may be withheld from the public in accordance with the provisions of 5 U.S.C. 552, will be available for inspection and copying in the Commission's Public Reference Room, 450 Fifth Street, NW., Washington, DC 20549. Copies of the filing also will be available for inspection and copying at the principal office of the Exchange. All comments received will be posted without change; the Commission does not edit personal identifying information from submissions. You should submit only information that you wish to make available publicly. All submissions should refer to File Number SR–Amex–2004–97 and should be submitted on or before February 3, 2005.

For the Commission, by the Division of Market Regulation, pursuant to delegated authority.[9]

J. Lynn Taylor,

Assistant Secretary.

[FR Doc. E5–116 Filed 1–12–05; 8:45 am]

BILLING CODE 8010–01–P

SECURITIES AND EXCHANGE COMMISSION

[Release No. 34–50999; File No. SR–Amex–2003–90]

Self-Regulatory Organizations; Order Granting Accelerated Approval of Proposed Rule Change and Amendment No. 1 Thereto by American Stock Exchange LLC Relating to the Amendment of Exchange Rule 153

January 7, 2005.

I. Introduction

On October 9, 2003, the American Stock Exchange LLC (''Amex'' or ''Exchange'') filed with the Securities

[4] 15 U.S.C. 78f(b).

[5] 15 U.S.C. 78f(b)(4).

[6] 15 U.S.C. 78s(b)(3)(A)(ii).

[7] 17 CFR 240.19b–4(f)(2).

[8] For purposes of calculating the 60-day period within which the Commission may summarily abrogate the proposed rule change under Section 19(b)(3)(C) of the Act, the Commission considers that period to commence on January 6, 2005, the date the Exchange filed Amendment No. 1 to the proposed rule change. *See* 15 U.S.C. 78s(b)(3)(C).

[9] 17 CFR 200.30–3(a)(12).

and Exchange Commission (''SEC'' or ''Commission''), pursuant to section 19(b)(1) of the Securities Exchange Act of 1934 (''Act''),[1] and Rule 19b–4 thereunder,[2] a proposed rule change to amend Amex Rule 153 relating to the creation of an electronic order audit trail. On December 15, 2004, the Exchange submitted Amendment No. 1 to the proposed rule change. The proposed rule change, as amended, was published for comment in the **Federal Register** on December 22, 2004, for a 15-day comment period, which expired on January 6, 2005.[3] This order approves the proposed rule change, and Amendment No. 1 thereto, on an accelerated basis.

II. Background

The proposed rule change is intended to fulfill certain of the undertakings contained in an order issued by the Commission relating to the settlement of an enforcement action against the Amex, Chicago Board Options Exchange, Inc., Pacific Exchange, Inc., and Philadelphia Stock Exchange, Inc. (collectively ''Options Exchanges'') for failure to comply with their own rules and to enforce compliance with their own rules by their members and persons associated with their members[4] as is required by section 19(g) of the Act.[5] The Order found that the Options Exchanges impaired the operations of the options market by: (1) Following a course of conduct under which they refrained from multiple listing a large number of options; and (2) inadequately discharging their obligations as self-regulatory organizations by failing adequately to enforce compliance with (a) certain of their rules, including order handling rules, that promote competition as well as investor protection, and (b) certain of the rules prohibiting anticompetitive conduct, such as harassment, intimidation, refusals to deal and retaliation directed at market participants who sought to act competitively. In addition, the Commission found that the Options Exchanges failed to enforce compliance with their trade reporting rules, which promote transparency of the market and facilitate surveillance and enforcement of other exchange rules and the Federal securities laws.

As part of the Order, the Options Exchanges agreed to, and were ordered to comply with, a variety of undertakings. Among other things, they agreed to, and were ordered to, design and implement an accurate, time-sequenced, consolidated options audit trail system (''COATS'') that would enable the Options Exchanges to reconstruct markets promptly, effectively surveil them, and enforce order handling, firm quote, trading reporting and other rules. The Options Exchanges were required to complete this undertaking in five phases. The Options Exchanges have completed the first four phases. The final phase of the undertaking to implement COATS requires that each exchange incorporate into its audit trail all non-electronic orders. This proposed rule change addresses that aspect of the undertaking.

III. Description of Proposed Rule Change

Amex Rule 153(b) currently requires members and member organizations to systematize ''immediately upon receipt'' orders, and modifications or cancellations of orders, ''that are eligible for input into the Exchange's electronic order processing facilities'' if such orders are not already systematized in the Exchange's electronic order processing facilities.[6] To comply with the COATS standard for an accurate time sequencing of option orders, transactions and quotations, in the instant filing, the Exchange proposes that members and member organizations would be required to systematize, prior to representation, either in BARS or in the Order Ticket enhancement to BARS described below, those options orders and modifications and cancellations of such orders that are not already systematized in an Amex system. The obligation to systematize orders prior to representation would commence on January 10, 2005.

In the case of an order that is not systematized when it reaches the Exchange, Amex proposes that a floor broker or a broker's clerk would be required to systematize the order by: (1) Opening an Order Entry Template (''OET'') on the Exchange's BARS booth or hand held terminal; (2) entering the order terms into the OET; and (3) transmitting the order to the Amex Order File (''AOF''). The first keystroke in the OET would be captured by the Exchange's systems at the time of order receipt. Brokers and their clerks also would be required to enter information relating to any modification, cancellation or execution of an order into BARS. The Exchange would then incorporate order and execution information in the AOF into the COATS file.

In addition to entering a non-system order directly into BARS, the Amex has designed an enhancement to the BARS system (called ''Order Ticket'') to facilitate order systemization by floor brokers and their clerks. The Exchange anticipates that the Order Ticket enhancement will be available by the end of the first quarter of 2005. The Order Ticket enhancement would allow floor brokers and their clerks to create electronic, time stamped, handwritten order tickets which would be saved by the Exchange as JPEG files.

A broker or clerk using the proposed BARS Order Ticket enhancement would select a new ''Order Ticket'' button on the booth or hand held BARS terminal, which would create a blank image template on a screen that exists on both the booth and hand held BARS terminals. Brokers and their clerks would write on the screen with a stylus and record order terms just as if they were using a paper order ticket. A person using the Order Ticket enhancement would be required to record the following order terms on the ticket prior to representing the order in the trading crowd:

- Buy/Sell;
- Symbol;
- Quantity;
- Call/Put (calls would be assumed unless ''P'' is written);
- Expiration;
- Strike (fractions would be assumed, *e.g.*, ''22½'' would be written as ''22'');
- Price term (a limit order would be assumed if a price were written, *e.g.*, ''1.20'' would mean a 1.20 limit. Market orders would be blank or represented by a dash);
- Contingencies (if applicable, *e.g.*, NH, AON, FOK, IOC, stock);
- Open/Close (close would be assumed unless ''O'' is written);
- Customer/Firm/Member Market Maker/Non-Member Market Maker (customer would be assumed unless ''F'', ''P'' or ''N'' is written);
- Give-up.

At the first mark on the template, the Order Ticket would be automatically time stamped by the Exchange's systems to the nearest second. When the broker or clerk finishes entering the information on the Order Ticket, he or she would be required to hit a ''save'' button, and the Order Ticket would be assigned a specific sequence number. Once the ''save'' button is hit, the Order

[1] 15 U.S.C. 78s(b)(1).

[2] 17 CFR 240.19b–4.

[3] *See* Securities Exchange Act Release No. 50866 (December 16, 2004), 69 FR 76798.

[4] *See* Order Instituting Public Administrative Proceedings Pursuant to Section 19(h)(1) of the Securities Exchange Act of 1934, Making Findings and Imposing Sanctions, Securities Exchange Act Release No. 43268 (September 11, 2000) and Administrative Proceeding File 3–10282 (the ''Order'').

[5] 15 U.S.C. 78s(g).

[6] *See* Securities Exchange Act Release No. 45794 (April 22, 2002), 67 FR 20849 (April 26, 2002).

Ticket could not be modified and would be stored by the Exchange as a JPEG file.

Once the order is systematized in Order Ticket, the member or member organization that accepted the order would be required to transfer the order terms into BARS so that a record of the order may be maintained in the Exchange's AOF system and any trade information submitted to comparison. In order to enter the order into BARS, a floor broker or clerk would open a BARS OET on a saved Order Ticket by selecting a new OET button within the image. This would cause both the time stamp and the sequence number from the Order Ticket to be automatically transferred from the Order Ticket to the OET. The transfer of the time stamp and sequence number would be done by the Exchange's systems and could not be modified by the broker or clerk. The broker or clerk then would be required to enter the required order terms into the OET and transmit the order to AOF. The broker or clerk also would be required to enter any information pertaining to a modification or cancellation of an order, or the execution of an order, directly into BARS from where it would be transmitted to AOF. Information pertaining to order modifications and cancellations would be required to be systematized prior to representation of the revised order in the crowd.

The Exchange further proposes that any proprietary system approved by the Exchange on the Exchange's trading floor which receives orders would be considered an Exchange system for the purpose of systematizing those options orders and modifications and cancellations of such orders that are not already systematized in an Amex system prior to representing the orders in the crowd. Any proprietary system approved by the Exchange would be required to have the functionality to comply with the requirements of COATS.

Under the proposed rule change, orders for FLEX options and accommodation trades would not have to be systematized prior to representation. Information about these orders would be required to be submitted to the Exchange on trade date no later than 10 minutes after the close of trading. The Exchange would maintain information submitted to it pertaining to FLEX options and accommodation trades in the COATS format.

IV. Discussion

After careful consideration, the Commission finds that the proposed rule change is consistent with the Act and the rules and regulations thereunder applicable to a national securities exchange.[7] In particular the Commission finds that the proposed rule change is consistent with section 6(b)(5) of the Act,[8] which requires among other things, that the Exchange's rules be designed to promote just and equitable principles of trade, to remove impediments and to perfect the mechanism of a free and open market and a national market system, and in general, to protect investors and the public interest.

The Commission believes that the rules as proposed should allow the Exchange to comply with its obligations under the Order in that they will result in the creation of an audit trail that incorporates manual orders sent to Amex. Specifically, the proposed rule change requires that Amex members enter certain order details immediately upon receipt, prior to representation of the order, into BARS or in the Order Ticket enhancement to BARS for later integration into COATS, which the Commission believes should result in an accurate, time-sequenced record of orders.

The Commission notes that the Exchange has acknowledged the need for effective and proactive surveillance for activities such as trading ahead and front-running in connection with the creation of its audit trail. The Exchange represents that it currently conducts automated surveillance for such activities and will incorporate a review of order systemization as part of such surveillance. The Exchange also states that it intends to implement supplementary surveillance and examination programs related to the systemization of orders requirement promptly after this requirement is instituted, which are designed to address, among other things, trading ahead and front-running. The Commission views effective surveillance as critical to the integrity of COATS and expects that the Exchange will inform the Commission of any problems it encounters in conducting effective surveillance.

The Commission finds good cause for accelerating approval of the proposed rule change and Amendment No. 1 thereto, prior to the thirtieth day after the date of the publication of notice thereof in the **Federal Register**. The Commission notes that the proposed rule change was noticed for a 15-day comment period and no comments were received. The Commission believes that it is appropriate to accelerate approval of the proposed rule change and Amendment No. 1 thereto so that the rule may be implemented on a timely basis to ensure prompt compliance with the undertakings contained in the Commission's Order.

V. Conclusion

For all of the aforementioned reasons, the Commission finds that the proposed rule change is consistent with the requirements of the Act and the rules and regulations thereunder applicable to a national securities exchange.

It is therefore ordered, pursuant to section 19(b)(2) of the Act,[9] that the proposed rule change (SR–Amex–2003–90) and Amendment No. 1 are approved on an accelerated basis.

For the Commission, by the Division of Market Regulation, pursuant to delegated authority.[10]

Jill M. Peterson,

Assistant Secretary.

[FR Doc. E5–127 Filed 1–12–05; 8:45 am]

BILLING CODE 8010–01–P

[7] In approving this proposal, the Commission has considered the proposed rule's impact on efficiency, competition and capital formation. 15 U.S.C. 78c(f).

[8] 15 U.S.C. 78f(b)(5).

[9] 15 U.S.C. 78s(b)(2).

[10] 17 CFR 200.30–3(a)(12).

SECURITIES AND EXCHANGE COMMISSION

[Release No. 34–50994; File No. SR–CBOE–2004–90]

Self-Regulatory Organizations; Notice of Filing and Immediate Effectiveness of Proposed Rule Change by the Chicago Board Options Exchange, Incorporated, Relating to a Delay of the Operative Period for Rule 6.45A(c)(iii)

January 7, 2005.

Pursuant to Section 19(b)(1) of the Securities Exchange Act of 1934 (''Exchange Act'' or ''Act'')[1] notice is hereby given that on December 28, 2004, the Chicago Board Options Exchange, Incorporated (''CBOE'' or ''Exchange'') filed with the Securities and Exchange Commission (''Commission'') the proposed rule change as described in Items I, II, and III below, which Items have been prepared by the CBOE. The Commission is publishing this notice to solicit comments on the proposed rule change from interested persons.

I. Self-Regulatory Organization's Statement of the Terms of Substance of the Proposed Rule Change

The Exchange proposes to delay implementation of recently approved CBOE Rule 6.45A(c)(iii). The text of the

[1] 15 U.S.C. 78(b)(1).

proposed rule change is available at the Office of the Secretary, CBOE and at the Commission.

II. Self-Regulatory Organization's Statement of the Purpose of, and Statutory Basis for, the Proposed Rule Change

In its filing with the Commission, the Exchange included statements concerning the purpose of and basis for the proposed rule change and discussed any comments it received on the proposed rule change. The text of these statements may be examined at the places specified in Item IV below. The Exchange has prepared summaries, set forth in sections A, B, and C below, of the most significant parts of such statements. The CBOE has designated this proposal as one concerned solely with the administration of the Exchange under Section 19(b)(3)(A)(iii) of the Act [2] and Rule 19b–4(f)(3) thereunder, [3] which renders the proposal effective upon filing with the Commission. The Commission is publishing this notice to solicit comments on the proposed rule change from interested persons.

A. Self-Regulatory Organization's Statement of the Purpose of, and Statutory Basis for, the Proposed Rule Change

On December 1, 2004, the Commission approved a CBOE proposal that eliminated the DPM participation entitlement in ''N-second'' group trades.[4] The Exchange anticipated implementing this rule change during December expiration week, however, unforeseen programming delays necessitate postponing implementation until January. In this regard, CBOE proposes to delay the operative period of recently-approved CBOE Rule 6.45A(c)(iii) until no later than January 31, 2005. Until such time that the Exchange rectifies these programming issues, DPMs will continue to be entitled to receive their guaranteed participation entitlement.

CBOE believes the proposed rule change is consistent with the Act and the rules and regulations under the Act applicable to a national securities exchange and, in particular, the requirements of section 6(b) of the Act.[5] Specifically, the Exchange believes the proposed rule change is consistent with the Section 6(b)(5) [6] requirements that the rules of an exchange be designed to promote just and equitable principles of trade, to prevent fraudulent and manipulative acts and, in general, to protect investors and the public interest.

B. Self-Regulatory Organization's Statement on Burden on Competition

CBOE does not believe that the proposed rule change will impose any burden on competition not necessary or appropriate in furtherance of the purposes of the Exchange Act.

C. Self-Regulatory Organization's Statement on Comments on the Proposed Rule Change Received From Members, Participants or Others

The Exchange neither solicited nor received written comments on the proposed rule change.

III. Date of Effectiveness of the Proposed Rule Change and Timing for Commission Action

The foregoing proposed rule change will take effect upon filing with the Commission pursuant to Section 19(b)(3)(A)(iii) of the Act [7] and Rule 19b–4(f)(3) thereunder,[8] because it is concerned solely with the administration of the Exchange. At any time within 60 days of the filing of such proposed rule change, the Commission may summarily abrogate such rule change if it appears to the Commission that such action is necessary or appropriate in the public interest, for the protection of investors, or otherwise in furtherance of the purposes of the Act.

IV. Solicitation of Comments

Interested persons are invited to submit written data, views, and arguments concerning the foregoing, including whether the proposed rule change is consistent with the Act. Comments may be submitted by any of the following methods:

Electronic Comments

- Use the Commission's Internet comment form (*http://www.sec.gov/rules/sro.shtml*); or
- Send an e-mail to *rule-comments@sec.gov*. Please include File Number SR–CBOE–2004–90 on the subject line.

Paper Comments

- Send paper comments in triplicate to Jonathan G. Katz, Secretary, Securities and Exchange Commission, 450 Fifth Street, NW., Washington, DC 20549–0609.

All submissions should refer to File Number SR–CBOE–2004–90. This file number should be included on the subject line if e-mail is used. To help the Commission process and review your comments more efficiently, please use only one method. The Commission will post all comments on the Commission's Internet Web site (*http://www.sec.gov/rules/sro.shtml*). Copies of the submission, all subsequent amendments, all written statements with respect to the proposed plan amendment that are filed with the Commission, and all written communications relating to the proposed plan amendment between the Commission and any person, other than those that may be withheld from the public in accordance with the provisions of 5 U.S.C. 552, will be available for inspection and copying in the Commission's Public Reference Section, 450 Fifth Street, NW., Washington, DC 20549. Copies of such filing also will be available for inspection and copying at the principal office of the CBOE. All comments received will be posted without change; the Commission does not edit personal identifying information from submissions. You should submit only information that you wish to make available publicly. All submissions should refer to File Number SR–CBOE–2004–90 and should be submitted on or before February 3, 2005.

For the Commission, by the Division of Market Regulation, pursuant to delegated authority.[9]

Jill M. Peterson,

Assistant Secretary.

[FR Doc. E5–124 Filed 1–12–05; 8:45 am]

BILLING CODE 8010–01–P

SECURITIES AND EXCHANGE COMMISSION

[Release No. 34–50996; File No. SR-CBOE–2004–77]

Self-Regulatory Organizations; Order Approving Proposed Rule Change by the Chicago Board Options Exchange, Inc., Relating to the Systematizing of Orders in Connection With the Requirement To Design and Implement a Consolidated Options Audit Trail System

January 7, 2005.

I. Introduction

On November 24, 2004, the Chicago Board Options Exchange, Inc. (''CBOE'' or ''Exchange'') filed with the Securities Exchange Commission (''SEC'' or ''Commission''), pursuant to section 19(b)(1) of the Securities Exchange Act

[2] 15 U.S.C. 78s(b)(3)(A)(iii).

[3] 17 CFR 240.19b–4(f)(3).

[4] Exchange Act Release No. 50775 (Dec. 1, 2004), 69 FR 70731 (Dec. 7, 2004) (approving SR–CBOE–2004–64).

[5] 15 U.S.C. 78(f)(b).

[6] 15 U.S.C. 78(f)(b)(5).

[7] 15 U.S.C. 78s(b)(3)(A)(iii).

[8] 17 CFR 240.19b–4(f)(3).

[9] 17 CFR 200.30–3(a)(12).

of 1934 (the ''Act'')[1] and Rule 19b–4 thereunder,[2] a proposed rule change to amend its rules relating to the systematization of orders in connection with the requirement to design and implement a consolidated options audit trail system (''COATS''). The proposed rule change was published for notice and comment in the **Federal Register** on December 6, 2004.[3] The Commission received 2 comment letters on the proposed rule change.[4] This order approves the proposed rule change.

II. Background

The proposed rule change is intended to fulfill certain of the undertakings contained in an order issued by the Commission relating to the settlement of an enforcement action against the American Stock Exchange LLC, CBOE, Pacific Exchange, Inc., and Philadelphia Stock Exchange, Inc. (collectively ''Options Exchanges'') for failure to comply with their own rules and to enforce compliance with their own rules by their members and persons associated with their members[5] as is required by section 19(g) of the Act.[6] The Order found that the Options Exchanges impaired the operations of the options market by: (i) Following a course of conduct under which they refrained from multiply listing a large number of options; and (ii) inadequately discharging their obligations as self-regulatory organizations by failing adequately to enforce compliance with (a) certain of their rules, including order handling rules, that promote competition as well as investor protection, and (b) certain of the rules prohibiting anticompetitive conduct, such as harassment, intimidation, refusals to deal and retaliation directed at market participants who sought to act competitively. In addition, the Commission found that the Options Exchanges failed to enforce compliance with their trade reporting rules, which promote transparency of the market and facilitate surveillance and enforcement of other exchange rules and the Federal securities laws.

As part of the Order, the Options Exchanges agreed to, and were ordered to comply with, a variety of undertakings. Among other things, they agreed to, and were ordered to, design and implement COATS to enable the Options Exchanges to reconstruct markets promptly, effectively surveil them and enforce order handling, firm quote, trading reporting and other rules. The Options Exchanges were required to complete this undertaking in five phases. The Options Exchanges have completed the first four phases. The final phase of the undertaking to implement COATS requires that each exchange incorporate into its audit trail all non-electronic orders. This proposed rule change addresses that aspect of the undertaking.

III. Description of Proposed Rule Change

To assure that all non-electronic orders are incorporated into COATS for Phase V, the CBOE proposes to amend CBOE Rule 6.24, which currently requires orders to be in written form. The proposed rule change generally would require that each order, change to an order, or cancellation of an order transmitted to the Exchange be ''systematized,'' in a format approved by the Exchange, either before it is sent to the Exchange or contemporaneously upon receipt on the floor of the Exchange, and prior to representation of the order.

CBOE proposes that each order, change to an order, or cancellation of an order may be systematized in one of two ways. First, if an order, change to an order, or cancellation of an order is sent electronically to the Exchange, would be considered to be systematized. Second, if an order, change to an order, or cancellation of an order that is sent to the Exchange non-electronically is input electronically into the Exchange's systems contemporaneously upon receipt on the Exchange and prior to representation, it would be considered to be systematized. The requirement would proposed to commence on January 10, 2005. With respect to non-electronic orders received in the S&P 100 index option class (OEX), the S&P 500 index option class (SPX), and the European-style S&P 100 index option class (XEO), however, CBOE proposes that the requirement to systematize orders prior to representation would commence on March 28, 2005.

Although the proposed rule change generally requires that each order be systematized prior to representation, the Exchange proposes to treat market and marketable orders differently than other orders so that marketable orders may be represented immediately in the marketplace. Specifically, with respect to non-electronic market and marketable orders sent to the Exchange, CBOE proposes to provide that the member responsible for systematizing the order must input into the Exchange's systems the following specific information with respect to a market or marketable order prior to the representation of the order: (i) The option symbol; (ii) the expiration month; (iii) the expiration year; (iv) the strike price; (v) buy or sell; (vi) call or put; (vii) the number of contracts; and (viii) the Clearing Member. Any additional information with respect to the order would be inputted into the Exchange's systems contemporaneously thereafter, which may occur after the representation and execution of the order.

CBOE also proposes to amend Interpretation .04 to CBOE Rule 6.73, to make explicit that a broker's responsibility to immediately and continuously represent market and marketable orders would be subject to the requirement that each order must be systematized prior to representation.

In proposed new subparagraph (a)(4) of CBOE Rule 6.24, the Exchange proposes that in the event of a malfunction or disruption of the Exchange's systems such that a member is unable to systematize an order, the member or member organization would be required to use paper trade tickets to record order information during the time period that the malfunction or disruption occurs. Upon the cessation of the malfunction or disruption, the member would be required to immediately resume systematizing orders. In addition, the member would be required to exert best efforts to input electronically into the Exchange's systems all relevant order information received during the time period when there was a malfunction or disruption of the Exchange's systems as soon as possible, and in any event would be required to input such data electronically into the Exchange's systems not later than the close of business on the day that the malfunction or disruption ceases.

The Exchange proposes to keep the current Interpretation and Policy .02(a) of CBOE Rule 6.24, which permits the use of hand signal communications on the floor to, among other things, initiate an order, cancel an order or to change material terms of an order. However, the Exchange proposes to clarify that any initiation, cancellation, or change of an order relayed to a floor broker through the use of hand signals also must be

[1] 15 U.S.C. 78s(b)(1).

[2] 17 CFR 240.19b–4.

[3] *See* Securities Exchange Act Release No. 50755 (November 30, 2004), 69 FR 70482.

[4] *See* e-mail from Brian Meister, CBOE Floor Broker, O'Connor and Co., LLC, dated December 26, 2004 and Richard T. Marneris, CBOE Floor Broker, dated December 21, 2004.

[5] *See* Order Instituting Public Administrative Proceedings Pursuant to Section 19(h)(1) of the Securities Exchange Act of 1934, Making Findings and Imposing Sanctions, Securities Exchange Act Release No. 43268 (September 11, 2000) and Administrative Proceeding File 3–10282 (the ''Order'').

[6] 15 U.S.C. 78s(g).

systematized upon receipt in accordance with paragraph (a) of CBOE Rule 6.24. The proposed rule change also deletes paragraph (b) of Interpretation .02 as paragraph (a) of that interpretation is being amended to delete the reference to exempt classes.

The Exchange proposes to add a new Interpretation and Policy .04 to CBOE Rule 6.24, which states that accommodation liquidations as defined in CBOE Rule 6.54 are exempted from the systematization requirement. However, the Exchange commits to maintain quotation, order and transaction information for accommodation liquidations in the same format as the COATS data is maintained, and will make such information available to the SEC upon request.

The Exchange also proposes to add a new Interpretation and Policy .05 to CBOE Rule 6.24, which states that FLEX options, as described in Chapter 24A of the Exchange's rules, are exempt from the requirements of the Rule. However, the Exchange commits to maintain as part of its audit trail quotation, order and transaction information for FLEX options in a form and manner that is substantially similar to the form and manner as the COATS data is maintained, and will make such information available to the SEC upon request.

The Exchange proposes to include a new Interpretation .06 to CBOE Rule 6.24, which provides that any proprietary system approved by the Exchange on the Exchange's trading floor that receives orders would be considered an Exchange system for purposes of paragraph (a)(1) of this Rule. This proposed rule would require that any proprietary system approved by the Exchange must comply with the requirements of COATS.

Finally, the Exchange has proposed a new Interpretation .07 to CBOE Rule 6.24, which would require that each order transmitted by a Market-Maker while on the floor, including any cancellation of or change to such order, must be systematized in accordance with the procedures described in Paragraph (a) and (b) of this Rule, as applicable. Currently, paragraph (d) of CBOE Rule 6.24 requires that each order transmitted by a Market-Maker while on the floor, including any cancellation of or change to such order, must be recorded legibly in a written form that has been approved by the Exchange, and must be time stamped immediately prior to its transmission. The new proposed interpretation thus would require that each order transmitted by a Market-Maker while on the floor, including any cancellation of or change to such order, be systematized in accordance with CBOE Rule 6.24.

IV. Summary of Comments

The Commission received comment letters from 2 CBOE floor brokers opposing the systematization prior to representation of an order requirement.[7] Both commenters were concerned that this requirement might harm customers by delaying the execution and possibly causing the customer orders to lose the market.

V. Discussion

After careful consideration, the Commission finds that the proposed rule change is consistent with the Act and the rules and regulations thereunder applicable to a national securities exchange. In particular the Commission finds that the proposed rule change is consistent with section 6(b)(5) of the Act,[8] which requires among other things, that the Exchange's rules be designed to promote just and equitable principles of trade, to remove impediments and to perfect the mechanism of a free and open market and a national market system, and in general, to protect investors and the public interest.[9]

The Commission believes that the rules as proposed should allow the Exchange to comply with its obligations under the Order in that they will result in the creation of an audit trail that incorporates manual orders sent to CBOE. Specifically, the proposed rules will require that each order, change to an order, or cancellation of an order must be systematized prior to representation.

With respect to market and marketable orders, the Exchange proposes to require that floor brokers must enter only eight order data elements into the Exchange's systems prior to representation. These elements are: (i) The option symbol; (ii) the expiration month; (iii) the expiration year; (iv) the strike price; (v) buy or sell; (vi) call or put; (vii) the number of contracts; and (viii) the Clearing Member. The Exchange represents that limiting the number of elements that must be entered prior to representation will permit marketable orders to be represented immediately in the marketplace as customers expect and as members representing those orders are obligated to do. The Commission notes that two commenters expressed concern that the requirement to systematize certain information prior to representation would harm investors.[10] The Commission notes, however, that only a limited amount of information about an order would be required to be systematized prior to representation under the proposal. Moreover, the Commission believes that the order elements proposed to be captured for market and marketable orders should be sufficient to distinguish one order from another order that a member may receive at or about the same time to ensure an accurate audit trail. Therefore, the Commission believes that it is appropriate and consistent with the goals of investor protection to permit the capture of only the above-referenced order data elements prior to representation for market and marketable orders.

The Commission also believes that the Exchange's plan for recording order details in the event of a systems outage or malfunction is reasonable. In the event of a systems outage or malfunction, floor brokers would revert to the use of trade tickets and would record on those tickets the times that various events occur in the life of the order. Further, the Exchange would ensure that the information recorded on trade tickets is entered into the Exchange's electronic systems in a timely manner so that it can be incorporated into the electronic audit trail.

The Commission notes that the Exchange has acknowledged the need for effective and proactive surveillance for activities such as trading ahead and front-running in connection with the creation of its audit trail. The Exchange represents that it currently conducts automated surveillance for such activities and will incorporate a review of order systemization as part of such surveillance. The Exchange also states that it intends to implement supplementary surveillance and examination programs related to the systemization of orders requirement promptly after this requirement is instituted, which are designed to address, among other things, trading ahead and front-running. The Commission views effective surveillance as critical to the integrity of COATS and expects that the Exchange will inform the Commission of any problems it encounters in conducting effective surveillance.

[7] *See supra* Note 4.

[8] 8 15 U.S.C. 78f(b)(5).

[9] In approving this proposal, the Commission has considered the proposed rule's impact on efficiency, competition and capital formation. 15 U.S.C. 78c(f).

[10] *See supra* note 4.

VI. Conclusion

For all of the aforementioned reasons, the Commission finds that the proposed rule change is consistent with the requirements of the Act and the rules and regulations thereunder applicable to a national securities exchange.

It is therefore ordered, pursuant to section 19(b)(2) of the Act,[11] that the proposed rule change (SR–CBOE–2004–77) is approved.

For the Commission, by the Division of Market Regulation, pursuant to delegated authority.[12]

Jill M. Peterson,

Assistant Secretary.

[FR Doc. E5–128 Filed 1–12–05; 8:45 am]

BILLING CODE 8010–01–P

SECURITIES AND EXCHANGE COMMISSION

[Release No. 34–50981; File No. SR–ISE–2004–38]

Self-Regulatory Organizations; International Securities Exchange, Inc.; Notice of Filing and Immediate Effectiveness of Proposed Rule Change Relating to Fee Changes

January 6, 2005.

Pursuant to section 19(b)(1) of the Securities Exchange Act of 1934 (the ''Act''),[1] and Rule 19b–4 thereunder,[2] notice is hereby given that on December 22, 2004, the International Securities Exchange, Inc. (the ''Exchange'' or the ''ISE'') filed with the Securities and Exchange Commission (the ''Commission'') the proposed rule change as described in items I, II, and III below, which items have been prepared by ISE. The Commission is publishing this notice to solicit comments on the proposed rule change from interested persons.

I. Self-Regulatory Organization's Statement of the Terms of Substance of the Proposed Rule Change

The ISE is proposing to amend its Schedule of Fees to adopt a $.10 per contract surcharge for certain transactions in options based on the Morgan Stanley Technology Index.[3] The text of the proposed rule change is available at the Commission and the ISE.

[11] 15 U.S.C. 78s(b)(2).

[12] 17 CFR 200.30–3(a)(12).

[1] 15 U.S.C. 78s(b)(1).

[2] 17 CFR 240.19b–4.

[3] *See* Securities Exchange Act Release No. 49447 (Mar. 18, 2004), 69 FR 16299 (Mar. 29, 2004) (approving the listing and trading of options on the Morgan Stanley Technology Index).

II. Self-Regulatory Organization's Statement of the Purpose of, and Statutory Basis for, the Proposed Rule Change

In its filing with the Commission, the ISE included statements concerning the purpose of, and basis for, the proposed rule change and discussed any comments it received on the proposed rule change. The text of these statements may be examined at the places specified in item IV below. The ISE has prepared summaries, set forth in sections A, B and C below, of the most significant aspects of such statements.

A. Self-Regulatory Organization's Statement of the Purpose of, and Statutory Basis for, the Proposed Rule Change

1. Purpose

The Exchange is proposing to amend its Schedule of Fees to adopt a $.10 per contract surcharge for certain transactions in options based on the Morgan Stanley Technology Index (''MSH'' or ''Index'').

The Exchange's Schedule of Fees currently has in place a surcharge fee item that calls for a $.10 per contract fee for transactions in certain licensed products. The Exchange has entered into a license agreement in connection with the listing and trading of options on the Index. The Exchange is adopting a fee for trading in these options to defray the licensing costs. The Exchange believes that charging the participants that trade these instruments is the most equitable means of recovering the costs of the license. However, because competitive pressures in the industry have resulted in the waiver of transaction fees for customers, the Exchange proposes to exclude Public Customer Orders[4] from this surcharge fee. Accordingly, this surcharge fee will only be charged to Exchange members with respect to non-Public Customer Orders.

2. Basis

The Exchange believes that the basis under the Act for this proposed rule change is the requirement under section 6(b)(4) of the Act[5] that an exchange have an equitable allocation of reasonable dues, fees and other charges among its members and other persons using its facilities.

[4] Public Customer Order is defined in Exchange Rule 100(a)(33) as an order for the account of a Public Customer. Public Customer is defined in Exchange Rule 100(a)(32) as a person that is not a broker or dealer in securities.

[5] 15 U.S.C. 78f(b)(4).

B. Self-Regulatory Organization's Statement on Burden on Competition

The Exchange does not believe that the proposed rule change will impose any burden on competition that is not necessary or appropriate in furtherance of the purposes of the Act.

C. Self-Regulatory Organization's Statement on Comments on the Proposed Rule Change Received From Members, Participants or Others

The Exchange has not solicited, and does not intend to solicit, comments on this proposed rule change. The Exchange has not received any unsolicited written comments from members or other interested parties.

III. Date of Effectiveness of the Proposed Rule Change and Timing for Commission Action

The foregoing rule change has become effective pursuant to section 19(b)(3)(A)(ii) of the Act[6] and Rule 19b–4(f)(2)[7] thereunder because it concerns a fee imposed by the Exchange. At any time within 60 days of the filing of the proposed rule change, the Commission may summarily abrogate such rule change if it appears to the Commission that such action is necessary or appropriate in the public interest, for the protection of investors, or otherwise in furtherance of the purposes of the Act.

IV. Solicitation of Comments

Interested persons are invited to submit written data, views, and arguments concerning the foregoing, including whether the proposed rule change is consistent with the Act. Comments may be submitted by any of the following methods:

Electronic Comments

- Use the Commission's Internet comment form (*http://www.sec.gov/rules/sro.shtml*); or
- Send an e-mail to *rule-comments@sec.gov.* Please include File No. SR–ISE–2004–38 on the subject line.

Paper Comments

- Send paper comments in triplicate to Jonathan G. Katz, Secretary, Securities and Exchange Commission, 450 Fifth Street, NW., Washington, DC 20549–0609.

All submissions should refer to File Number SR–ISE–2004–38. This file number should be included on the subject line if e-mail is used. To help the Commission process and review your

[6] 15 U.S.C. 78s(b)(3)(A)(ii).

[7] 17 CFR 240.19b–4(f)(2).

comments more efficiently, please use only one method. The Commission will post all comments on the Commissions Internet Web site (*http://www.sec.gov/rules/sro.shtml*). Copies of the submission, all subsequent amendments, all written statements with respect to the proposed rule change that are filed with the Commission, and all written communications relating to the proposed rule change between the Commission and any person, other than those that may be withheld from the public in accordance with the provisions of 5 U.S.C. 552, will be available for inspection and copying in the Commission's Public Reference Room. Copies of such filing also will be available for inspection and copying at the principal office of the ISE. All comments received will be posted without change; the Commission does not edit personal identifying information from submissions. You should submit only information that you wish to make available publicly. All submissions should refer to File Number SR–ISE–2004–38 and should be submitted by February 3, 2005.

For the Commission, by the Division of Market Regulation, pursuant to delegated authority.[8]

J. Lynn Taylor,

Assistant Secretary.

[FR Doc. E5–130 Filed 1–12–05; 8:45 am]

BILLING CODE 8010–01–P

[8] 17 CFR 200.30–3(a)(12).

SECURITIES AND EXCHANGE COMMISSION

[Release No. 34–50984; File No. SR–NASD–2004–177]

Self Regulatory Organizations; Notice of Filing and Immediate Effectiveness of Proposed Rule Change by the National Association of Securities Dealers, Inc. Relating to Fees for Filing Documents Pursuant to NASD Rule 2710 (Corporate Financing Rule—Underwriting Terms and Arrangements)

January 6, 2005.

Pursuant to Section 19(b)(3) of the Securities Exchange Act of 1934 (''Act'')[1] and Rule 19b–4 thereunder,[2] notice is hereby given that on December 3, 2004, the National Association of Securities Dealers, Inc. (''NASD'') filed with the Securities and Exchange Commission (''SEC'' or ''Commission'') the proposed rule change as described in Items I, II, and III below, which Items have been prepared by NASD. NASD has designated the proposed rule change as ''establishing or changing a due, fee or other charge'' under Section 19(b)(3)(A)(ii) of the Act[3] and Rule 19b–4(f)(2) thereunder,[4] which renders the proposal effective upon receipt of this filing by the Commission. The Commission is publishing this notice to solicit comments on the proposed rule change from interested persons.

[1] 15 U.S.C. 78s(b)(3).

[2] 17 CFR 240.19b–4.

I. Self-Regulatory Organization's Statement of the Terms of Substance of the Proposed Rule Change

NASD is proposing to amend Section 7 of Schedule A to the NASD By-Laws (''Section 7'') to adjust fees for filing documents pursuant to NASD Rule 2710 (Corporate Financing Rule—Underwriting Terms and Arrangements). Below is the text of the proposed rule change. Proposed new language is *italicized*; proposed deletions are in [brackets].

* * * * *

SCHEDULE A TO NASD BY-LAWS

* * * * *

Section 7—Fees for Filing Documents Pursuant to the Corporate Financing Rule

(a) There shall be a fee imposed for the filing of initial documents relating to any offering filed with NASD pursuant to the Corporate Financing Rule equal to $500 plus .01% of the proposed maximum aggregate offering price or other applicable value of all securities registered on an SEC registration statement or included on any other type of offering document (where not filed with the SEC), but shall not exceed [$30,500] *$75,500.* The amount of filing fee may be rounded to the nearest dollar.

(b) There shall be an additional fee imposed for the filing of any amendment or other change to the documents initially filed with NASD pursuant to the Corporate Financing Rule equal to .01% of the net increase in the maximum aggregate offering price or other applicable value of all securities registered on an SEC registration statement, or any related Rule 462(b) registration statement, or reflected on any Rule 430A prospectus, or included on any other type of offering document. However, the aggregate of all filing fees paid in connection with an SEC registration statement or other type of offering document shall not exceed [$30,500] *$75,500.*

* * * * *

[3] 15 U.S.C. 78s(b)(3)(A)(ii).

[4] 17 CFR 240.19b–4(f)(2).

II. Self-Regulatory Organization's Statement of the Purpose of, and Statutory Basis for, the Proposed Rule Change

In its filing with the Commission, NASD included statements concerning the purpose of and basis for the proposed rule change and discussed any comments it received on the proposed rule change. The text of these statements may be examined at the places specified in Item IV below. NASD has prepared summaries, set forth in sections A, B, and C below, of the most significant aspects of such statements.

A. Self-Regulatory Organization's Statement of the Purpose of, and Statutory Basis for, the Proposed Rule Change

1. Purpose

According to NASD, the purpose of the proposed rule change is to amend Section 7 to raise the maximum fee that may be charged for the filing of initial documents and amendments pursuant to the Corporate Financing Rule from $30,500 to $75,500. NASD's Corporate Financing Department (the ''Department'') is responsible for reviewing the proposed underwriting terms and arrangements of proposed public offerings of securities for compliance with the requirements of NASD Rule 2710. According to NASD, the purpose of the Department's review is to provide members with, among other things, regulatory guidance as to what constitutes fair and reasonable underwriting terms and arrangements. Pursuant to NASD Rule 2710, the managing underwriter of the offering is required to file certain documentation with the Department for review.

Under Section 7, the current fee for filings pursuant to NASD Rule 2710 is equal to $500 plus .01 percent of the proposed maximum aggregate offering price or other applicable value of all securities registered on an SEC registration statement or included on any other type of offering document (where not filed with the SEC), but shall not exceed $30,500. Thus, under Section 7, fees are currently capped with respect to offerings with an aggregate offering price of $300 million or more.

In 1989, when the current fee structure was adopted, the $500 minimum fee ensured that at least $500 would be charged for the smallest offerings.[5] For larger offerings, a $30,500

[5] NASD supplemented the language included in this paragraph to reflect the historical purpose behind the fee structure. Telephone conversation and e-mail correspondence between Shirley Weiss, Associate General Counsel, NASD and Bradley

cap was imposed (.01 percent of the aggregate offering price of $300 million plus a $500 minimum flat fee). According to NASD, although the maximum fee was capped, approximately 90 percent of all of the offerings filed with NASD were at or below the cap (approximately 10 percent of the offerings reviewed in 1989 were larger than $300 million). According to NASD, a recent review of the corporate financing fees shows that the current fee structure is wholly out of date. By 2004, because of the significant increase in the size of public offerings over the intervening 15 years, NASD is only capturing approximately 75 percent of the offerings at or below the cap. Accordingly, NASD is proposing to raise the current cap to place approximately 90 percent of the offerings at or below the cap. The increase is from .01 percent of $300 million to .01 percent of $750 million, which would raise the cap from $30,500 to $75,500 ($75,000, plus the $500 minimum flat fee). NASD believes the proposed increase, which raises only the cap and not the rate imposed for the review of documents by the Department, would be equitably allocated among members underwriting the largest public offerings.

NASD proposes that the fee change will be implemented on January 1, 2005.[6] NASD plans to conduct an annual review of costs and adjust the corporate financing fee, if necessary, as of January 1 each year after appropriate consultation with the Board and rule filings with the Commission. NASD will announce the implementation date of the proposed rule change in a *Notice to Members* to be published no later than 30 days following Commission notice of filing of the proposed rule change for immediate effectiveness.

2. Statutory Basis

NASD believes that the proposed rule change is consistent with the provisions of Section 15A(b)(5) of the Act, which requires, among other things, that NASD rules provide for the equitable allocation of reasonable dues, fees and other charges among members and issuers and other persons using any facility or system that NASD operates or controls. NASD believes that the rule change is consistent with Section 15A(b)(5) of the Act in that the proposed fees are reasonable based on the general increase in the size of public offerings and are equitably allocated among members submitting proposed public offerings of securities to the Department for compliance with the requirements of NASD Rule 2710.

B. Self-Regulatory Organization's Statement on Burden on Competition

NASD does not believe that the proposed rule change will result in any burden on competition that is not necessary or appropriate in furtherance of the purposes of the Act, as amended.

C. Self-Regulatory Organization's Statement on Comments on the Proposed Rule Change Received From Members, Participants, or Others

Written comments were neither solicited nor received.

III. Date of Effectiveness of the Proposed Rule Change and Timing for Commission Action

The foregoing rule change has become effective pursuant to Section 19(b)(3)(A) of the Act and paragraph (f)(2) of Rule 19b–4 thereunder because it establishes or changes a due, fee, or other charge. At any time within 60 days of the filing of the proposed rule change, the Commission may summarily abrogate such rule change if it appears to the Commission that such action is necessary or appropriate in the public interest, for the protection of investors, or otherwise in furtherance of the purposes of the Act.

IV. Solicitation of Comments

Interested persons are invited to submit written data, views and arguments concerning the foregoing, including whether the proposed rule change is consistent with the Act. Comments may be submitted by any of the following methods:

Electronic Comments

- Use the Commission's Internet comment form (*http://www.sec.gov/rules/sro.shtml*); or
- Send an e-mail to *rule-comments@sec.gov.* Please include File Number SR–NASD–2004–177 on the subject line.

Paper Comments

- Send paper comments in triplicate to Jonathan G. Katz, Secretary, Securities and Exchange Commission, 450 Fifth Street, NW., Washington, DC 20549–0609.

All submissions should refer to File Number SR–NASD–2004–177. This file number should be included on the subject line if e-mail is used. To help the Commission process and review your comments more efficiently, please use only one method. The Commission will post all comments on the Commission's Internet Web site (*http://www.sec.gov/rules/sro.shtml*). Copies of the submission, all subsequent amendments, all written statements with respect to the proposed rule change that are filed with the Commission, and all written communications relating to the proposed rule change between the Commission and any person, other than those that may be withheld from the public in accordance with the provisions of 5 U.S.C. 552, will be available for inspection and copying at the principal office of NASD. All comments received will be posted without change; the Commission does not edit personal identifying information from submissions. You should submit only information that you wish to make available publicly. All submissions should refer to the File Number SR–NASD–2004–177 and should be submitted on or before February 3, 2005.

For the Commission, by the Division of Market Regulation, pursuant to delegated authority.[7]

J. Lynn Taylor,

Assistant Secretary.

[FR Doc. E5–118 Filed 1–12–05; 8:45 am]

BILLING CODE 8010–01–P

Owens, Attorney, Division of Market Regulation, Commission, dated January 4, 2005.

[6] New filings received and accepted by the Department through its electronic filing system (COBRA) by 12 p.m., Eastern Time, on Thursday, December 30, 2004, will be processed under the current fee structure ($30,500 maximum fee). New filings that have been rejected will be processed under the current fee structure if corrected, re-submitted, and accepted by the Department by the December 30, 2004 deadline.

COBRADesk will be shut down and unavailable for filings on Thursday, December 30, 2004, at 12 p.m., Eastern Time, to update COBRA and COBRADesk to accept the proposed new filing fee. COBRADesk will again be available to accept filings on Monday, January 3, 2005, at 8 a.m., Eastern Time. COBRA will shut down at 6 p.m., Eastern Time, on Thursday, December 30, 2004, to permit the Department to test the system on Friday, December 31, 2004. The Department expects that COBRA will be accessible on Saturday, January 1, 2005. NASD will notify NASD users of system availability on the NASD Web site beginning on December 1, 2004.

[7] 17 CFR 200.30–3(a)(12).

SECURITIES AND EXCHANGE COMMISSION

[Release No. 34–50992; File No. SR–OCC–2004–23]

Self-Regulatory Organizations; The Options Clearing Corporation; Notice of Filing and Immediate Effectiveness of a Proposed Rule Change Relating to a Conforming Change in Rule 1106(a)(3)

January 7, 2005.

Pursuant to Section 19(b)(1) of the Securities Exchange Act of 1934 (''Act''),[1] notice is hereby given that on December 17, 2004, The Options Clearing Corporation (''OCC'') filed with the Securities and Exchange Commission (''Commission'') the proposed rule change as described in Items I, II, and III below, which items have been prepared primarily by OCC. The Commission is publishing this notice to solicit comments on the proposed rule change from interested persons.

I. Self-Regulatory Organization's Statement of the Terms of Substance of the Proposed Rule Change

The proposed rule change makes a conforming, technical change to OCC Rule 1106(a)(3).

II. Self-Regulatory Organization's Statement of the Purpose of, and Statutory Basis for, the Proposed Rule Change

In its filing with the Commission, OCC included statements concerning the purpose of and basis for the proposed rule change and discussed any comments it received on the proposed rule change. The text of these statements may be examined at the places specified in Item IV below. OCC has prepared summaries, set forth in sections (A), (B), and (C) below, of the most significant aspects of such statements.[2]

(A) Self-Regulatory Organization's Statement of the Purpose of, and Statutory Basis for, the Proposed Rule Change

In August 2004 the Commission approved a proposed rule change that reduced the exercise thresholds applied to equity options for purposes of exercise by exception processing as set forth in Rule 805.[3] Specifically, the thresholds were reduced from $.75 to $.25 in a clearing member's customers' account and from $.25 to $.15 in any other account (*i.e.*, firm and market maker accounts). However, OCC neglected to change Rule 1106(a)(3), which was intended to track those thresholds. The purpose of this rule change is to correct the error by making a conforming, technical change to Rule 1106(a)(3).

OCC believes that the proposed rule change is consistent with Section 17A of the Act, as amended, because it facilitates the administration of an existing rule. The proposed rule change is not inconsistent with the existing rules of OCC, including any other rules proposed to be amended.

(B) Self-Regulatory Organization's Statement on Burden on Competition

OCC does not believe that the proposed rule change would impose any burden on competition.

(C) Self-Regulatory Organization's Statement on Comments on the Proposed Rule Change Received From Members, Participants, or Others

Written comments were not and are not intended to be solicited with respect to the proposed rule change, and none have been received.

III. Date of Effectiveness of the Proposed Rule Change and Timing for Commission Action

The foregoing rule change has become effective pursuant to Section 19(b)(3)(A)(i) of the Act[4] and Rule 19b–4(f)(1)[5] thereunder because it constitutes a stated policy, practice or interpretation with respect to the meaning, enforcement or administration of an existing rule. At any time within sixty days of the filing of the proposed rule change, the Commission could have summarily abrogated such rule change if it appeared to the Commission that such action was necessary or appropriate in the public interest, for the protection of investors, or otherwise in furtherance of the purposes of the Act.

IV. Solicitation of Comments

Interested persons are invited to submit written data, views, and arguments concerning the foregoing, including whether the proposed rule change is consistent with the Act. Comments may be submitted by any of the following methods:

Electronic Comments

- Use the Commission's Internet comment form (*http://www.sec.gov/rules/sro.shtml*) or
- Send an e-mail to *rule-comments@sec.gov*. Please include File Number SR–OCC–2004–23 on the subject line.

Paper Comments

- Send paper comments in triplicate to Jonathan G. Katz, Secretary, Securities and Exchange Commission, 450 Fifth Street, NW., Washington, DC 20549–0609.

All submissions should refer to File Number SR–OCC–2004–23. This file number should be included on the subject line if e-mail is used. To help the Commission process and review your comments more efficiently, please use only one method. The Commission will post all comments on the Commission's Internet Web site (*http://www.sec.gov/rules/sro.shtml*). Copies of the submission, all subsequent amendments, all written statements with respect to the proposed rule change that are filed with the Commission, and all written communications relating to the proposed rule change between the Commission and any person, other than those that may be withheld from the public in accordance with the provisions of 5 U.S.C. 552, will be available for inspection and copying in the Commission's Public Reference Section, 450 Fifth Street, NW., Washington, DC 20549. Copies of such filing also will be available for inspection and copying at the principal office of OCC and on OCC's Web site at *http://www.optionsclearing.com*. All comments received will be posted without change; the Commission does not edit personal identifying information from submissions. You should submit only information that you wish to make available publicly. All submissions should refer to File Number SR–OCC–2004–23 and should be submitted on or before February 3, 2005.

For the Commission by the Division of Market Regulation, pursuant to delegated authority.[6]

J. Lynn Taylor,

Assistant Secretary.

[FR Doc. E5–117 Filed 1–12–05; 8:45 am]

BILLING CODE 8010–01–P

[1] 15 U.S.C. 78s(b)(1).

[2] The Commission has modified parts of these statements.

[3] Securities Exchange Act Release No. 50178 (August 10, 2004), 69 FR 51343 (August 18, 2004) [File No. SR–OCC–2004–04].

[4] 15 U.S.C. 78s(b)(3)(A)(i).

[5] 17 CFR 240.19b–4(f)(1).

[6] 17 CFR 200.30–3(a)(12).

SECURITIES AND EXCHANGE COMMISSION

[Release No. 34–50998; File No. SR–PCX–2004–122]

Self-Regulatory Organizations; Order Granting Accelerated Approval of Proposed Rule Change by Pacific Exchange, Inc., Relating to the Implementation of a New Order Audit Trail System

January 7, 2005.

I. Introduction

On December 14, 2004, the Pacific Exchange, Inc., (''PCX'' or ''Exchange'') filed with the Securities and Exchange Commission (''SEC'' or ''Commission''), pursuant to section 19(b)(1) of the Securities Exchange Act of 1934 (''Act''),[1] and Rule 19b–4 thereunder,[2] a proposed rule change relating to the creation of an electronic order audit trail. The proposed rule change was published for comment in the **Federal Register** on December 22, 2004 for a 15-day comment period, which expired on January 6, 2005.[3] The Commission received no comments on the proposed rule change. This order approves the proposed rule change on an accelerated basis.

II. Background

The proposed rule change is intended to fulfill certain of the undertakings contained in an order issued by the Commission relating to the settlement of an enforcement action against the American Stock Exchange LLC, Chicago Board Options Exchange, Inc., PCX, and Philadelphia Stock Exchange, Inc., (collectively ''Options Exchanges'') for failure to comply with their own rules and to enforce compliance with their own rules by their members and persons associated with their members[4] as is required by Section 19(g) of the Act.[5] The Order found that the Options Exchanges impaired the operations of the options market by: (1) Following a course of conduct under which they refrained from multiply listing a large number of options; and (2) inadequately discharging their obligations as self-regulatory organizations by failing adequately to enforce compliance with (a) certain of their rules, including order handling rules, that promote competition as well as investor protection, and (b) certain of the rules prohibiting anticompetitive conduct, such as harassment, intimidation, refusals to deal and retaliation directed at market participants who sought to act competitively. In addition, the Commission found that the Options Exchanges failed to enforce compliance with their trade reporting rules, which promote transparency of the market and facilitate surveillance and enforcement of other exchange rules and the Federal securities laws.

As part of the Order, the Options Exchanges agreed to, and were ordered to comply with, a variety of undertakings. Among other things, they agreed to, and were ordered to, design and implement an accurate, time-sequenced, consolidated options audit trail system (''COATS'') that would enable the Options Exchanges to reconstruct markets promptly, effectively surveil them, and enforce order handling, firm quote, trading reporting and other rules. The Options Exchanges were required to complete this undertaking in five phases. The Options Exchanges have completed the first four phases. The final phase of the undertaking to implement COATS requires that each exchange incorporate into its audit trail all non-electronic orders. This proposed rule change addresses that aspect of the undertaking.

III. Description of Proposed Rule Change

The Exchange proposes to adopt new PCX Rule 6.67(c), which would require that every OTP Holder or OTP Firm that receives an order for execution on the Exchange immediately records the details of the order (including any modification of the terms of the order or cancellation of the order) into its Electronic Order Capture (''EOC'') system, unless such order has been entered into the Exchange's other electronic order processing facilities (*e.g.*, orders sent electronically through the Exchange's MFI). OTP Holders and OTP Firms would have two ways to record the details of an order into EOC prior to representation in the trading crowd: (1) Direct entry into the EOC system, or (2) entry to an Electronic Tablet that enables the user to hand-write the order information onto the tablet, which converts the information into an electronic format.

The details of each order that would be required to be recorded upon receipt if directly entered into the EOC system include the following:[6] (1) CMTA information/Clearing OTP Holder or OTP Firm; (2) Option symbol, expiration month, exercise price, and type of option (call or put); (3) Side of market (buy or sell); (4) Quantity of option contracts; (5) Any limit price, stop price, or special conditions; (6) Opening or closing transaction; (7) Time in force; (8) Account origin code; and (9) Solicited or unsolicited.

The details of each order that would be required to be recorded upon receipt if entered into the Electronic Tablet include the following:[7] (1) CMTA information/Clearing OTP Holder or Firm; (2) Option symbol, expiration month, exercise price, and type of option (call or put); (3) Side of market (buy or sell); (4) Quantity of option contracts; (5) Any limit price, stop price, or special conditions; and (6) Opening or closing transaction.

The Exchange also proposes to add interpretive language to make it clear that EOC and the Electronic Tablet are approved formats for transmitting orders for purposes of this Rule. In addition, proposed PCX Rule 6.67(b) requires that orders sent to the Exchange for execution must comply with the order format requirements established by the Exchange relating to, among other things, option symbol, expiration month, exercise price, type of option (call or put), quantity of option contracts, clearing member organization, whether the order is to buy or sell, and whether the order is market or limit.

An exception to the requirement for recording order information into EOC or the Electronic Tablet is contained in proposed PCX Rule 6.67(d). Under this proposed rule, if a disruption or malfunction to EOC or the Electronic Tablet or any other Exchange electronic order processing system occurs, the EOC or the Electronic Tablet entry requirement would be suspended upon the approval of two Trading Officials, and the EOC/Electronic Tablet Contingency Reporting Procedures will be in effect pursuant to PCX Rule 6.67(d)(1)(A).[8] If the Exchange is still able to process and disseminate quotes

[1] 15 U.S.C. 78s(b)(1).

[2] 17 CFR 240.19b–4.

[3] *See* Securities Exchange Act Release No. 50866 (December 14, 2004), 69 FR 76808.

[4] *See* Order Instituting Public Administrative Proceedings Pursuant to Section 19(h)(1) of the Securities Exchange Act of 1934, Making Findings and Imposing Sanctions, Securities Exchange Act Release No. 43268 (September 11, 2000) and Administrative Proceeding File 3–10282 (the ''Order'').

[5] 15 U.S.C. 78s(g).

[6] The Exchange represents that the order entry time and identification number are automatically assigned upon entry into EOC.

[7] The Exchange also represents that the order entry time and identification number are automatically assigned upon entry into the Electronic Tablet.

[8] Under the proposed rule, OTP Holders and OTP Firms must use a backup supply of tickets to record the details of the order received through non-electronic means and time stamp the order of events. Once the disruption or malfunction has been corrected, as determined by one Floor Official, OTP Holders and OTP Firms must input all orders into an EOC device using the ''as-of'' field.

accurately, then any orders received by the Exchange would be processed manually through the use of paper tickets. In such circumstances, all other Exchange rules governing options trading would remain in effect. Accordingly, the Exchange proposes to retain its existing rules that are applicable to the manual processing of order tickets.

Current PCX Rule 6.68(a) requires OTP Holder and OTP Firms to maintain and preserve certain information items relating to the terms of each option order. The Exchange proposes to make minor technical changes to the text by renaming and renumbering certain information items enumerated in the Rule for clarity. The Exchange also proposes language to specify that the Exchange would be required to maintain and preserve all electronic orders on behalf of OTP Holders and OTP Firms. The proposed rule change does not replace existing requirements for recording orders contained in this Rule. The Exchange further proposes to amend PCX Rule 6.68(b) to make it clear that OTP Holders and OTP Firms would be required to comply with their recordkeeping obligations for orders excepted from the EOC/Electronic Tablet requirements.

Finally, the Exchange proposes to add a Commentary .01 to PCX Rule 6.67, which provides that Cabinet Trades and FLEX options are exempt from the EOC and Electronic Tablet Entry Requirements as set forth in PCX Rule 6.67(c). However, such trades would be required to be processed using manual time stamped order tickets. The PCX would maintain a separate record of quotes, orders and transactions related to such trades in the same format as the COATS data and would make such information available upon Commission request.

The system entry requirement proposed in this rule change would become completely operative on January 10, 2005.

IV. Discussion

After careful consideration, the Commission finds that the proposed rule change is consistent with Act and the rules and regulations thereunder applicable to a national securities exchange.[9] In particular the Commission finds that the proposed rule change is consistent with Section 6(b)(5) of the Act,[10] which requires among other things, that the Exchange's rules be designed to promote just and equitable principles of trade, to remove impediments and to perfect the mechanism of a free and open market and a national market system, and in general, to protect investors and the public interest.

The Commission believes that the rules as proposed should allow the Exchange to comply with its obligations under the Order in that they should result in the creation of an audit trail that incorporates manual orders sent to PCX. Specifically, the proposed rule change requires that PCX members enter certain details immediately upon receipt, prior to representation of the order, into either EOC or the Electronic Tablet, which the Commission believes should result in an accurate, time-sequenced record of orders.

The Commission also believes that the Exchange's plan for recording order details in the event of a systems outage or malfunction is reasonable. In the event of a systems outage or malfunction, floor brokers would revert to the use of trade tickets and would record on those tickets the times that various events occur in the life of the order. Further, the Exchange would ensure that the information recorded on trade tickets is entered into the Exchange's electronic systems in a timely manner so that it can be incorporated into the electronic audit trail.

The Commission notes that the Exchange has acknowledged the need for effective and proactive surveillance for activities such as trading ahead and front-running in connection with the creation of its audit trail. The Exchange represents that it will implement proactive and effective surveillance procedures for violations of Exchange rules and Federal securities laws, including, but not limited to, rules prohibiting trading ahead and front running, related to the entry of customer orders into the EOC system. The Commission views effective surveillance as critical to the integrity of COATS and expects that the Exchange will inform the Commission of any problems it encounters in conducting effective surveillance.

The Commission finds good cause for accelerating approval of the proposed rule change prior to the thirtieth day after the date of the publication of notice thereof in the **Federal Register**. The Commission notes that the proposed rule change was noticed for a 15-day comment period and that no comments were received. The Commission believes that it is appropriate to accelerate approval of the proposed rule change so that the proposal may be implemented on a timely basis to ensure prompt compliance with the undertakings contained in the Commission's Order.

V. Conclusion

For all of the aforementioned reasons, the Commission finds that the proposed rule change is consistent with the requirements of the Act and the rules and regulations thereunder applicable to a national securities exchange.

It is therefore ordered, pursuant to section 19(b)(2) of the Act,[11] that the proposed rule change (SR–PCX–2004–122) is approved on an accelerated basis.

For the Commission, by the Division of Market Regulation, pursuant to delegated authority.[12]

Jill M. Peterson,

Assistant Secretary.

[FR Doc. E5–126 Filed 1–12–05; 8:45 am]

BILLING CODE 8010–01–P

[9] In approving this proposal, the Commission has considered the proposed rule's impact on efficiency, competition and capital formation. 15 U.S.C. 78c(f).

[10] 15 U.S.C. 78f(b)(5).

[11] 15 U.S.C. 78s(b)(2).

[12] 17 CFR 200.30–3(a)(12).

SECURITIES AND EXCHANGE COMMISSION

[Release No. 34–50997; File No. SR–Phlx–2003–40]

Self-Regulatory Organizations; Order Approving Proposed Rule Change by the Philadelphia Stock Exchange, Inc. and Notice of Filing and Order Granting Accelerated Approval to Amendments No. 2, 3, 4 and 5 Relating to the Options Floor Broker Management System

January 7, 2005.

I. Introduction

On June 2, 2003, the Philadelphia Stock Exchange, Inc. (''Phlx'' or ''Exchange''), filed with the Securities and Exchange Commission (''Commission'' or ''SEC'') a proposed rule change pursuant to Section 19(b)(1) of the Securities Exchange Act of 1934 (''Act'')[1] and Rule 19b–4 thereunder,[2] to adopt new rules relating to the implementation of its Floor Broker Management System (''FBMS'' or ''System''). On July 28, 2003, the Exchange filed Amendment No. 1 to the proposed rule change. On August 7, 2003, the proposed rule change, as amended, was published for comment in the **Federal Register** to solicit comment from interested persons.[3] No comments were received.

[1] 15 U.S.C. 78s(b)(1).

[2] 17 CFR 240.19b–4.

[3] *See* Securities Exchange Act Release No. 48265 (July 31, 2003), 68 FR 47137.

On August 1, 2003, the Exchange submitted Amendment No. 2 to the proposed rule change.[4] On August 15, 2003, the Exchange submitted Amendment No. 3 to the proposed rule change.[5] On October 9, 2003, the Exchange submitted Amendment No. 4 to the proposed rule change.[6] On December 14, 2004, the Exchange submitted Amendment No. 5 to the proposed rule change.[7] This order approves the proposed rule change, as amended, and notices and grants accelerated approval to Amendments No. 2, 3, 4, and 5.

II. Background

The proposed rule change is intended to fulfill certain of the undertakings contained in an order issued by the Commission relating to the settlement of an enforcement action against the American Stock Exchange LLC, Chicago Board Options Exchange, Inc., Pacific Exchange, Inc. and Phlx (collectively ''Options Exchanges'') for failure to comply with their own rules and to enforce compliance with their own rules by their members and persons associated with their members[8] as is required by Section 19(g) of the Act.[9] The Order found that the Options Exchanges impaired the operations of the options market by: (1) Following a course of conduct under which they refrained from multiply listing a large number of options; and (2) inadequately discharging their obligations as self-regulatory organizations by failing adequately to enforce compliance with (a) certain of their rules, including order handling rules, that promote competition as well as investor protection, and (b) certain of the rules prohibiting anticompetitive conduct, such as harassment, intimidation, refusals to deal and retaliation directed at market participants who sought to act competitively. In addition, the Commission found that the Options Exchanges failed to enforce compliance with their trade reporting rules, which promote transparency of the market and facilitate surveillance and enforcement of other exchange rules and the federal securities laws.

As part of the Order, the Options Exchanges agreed to, and were ordered to comply with, a variety of undertakings. Among other things, they agreed to, and were ordered to, design and implement an accurate, time-sequenced, consolidated options audit trail system (''COATS'') that will enable the Options Exchanges to reconstruct markets promptly, effectively surveil them and enforce order handling, firm quote, trading reporting and other rules. The Options Exchanges were required to complete this undertaking in five phases. The Options Exchanges have completed the first four phases. The final phase of the undertaking to implement COATS requires that each exchange incorporate into its audit trail all non-electronic orders. This proposed rule change addresses that aspect of the undertaking.

III. Description

The Exchange proposes to effect rule changes on a permanent basis to support the implementation of its new system, known as FBMS. FBMS would create an accurate, time-sequenced electronic options order audit trail for manual orders received by the Exchange's floor brokers

A. Operation of FBMS

FBMS is a component of AUTOM[10] designed to enable floor brokers and/or their employees to enter, route and report transactions stemming from option orders received on the Exchange. Floor brokers or their employees would access the System through an electronic Exchange-provided handheld device on which they would have the ability to enter the required information as set forth in proposed Phlx Rule 1063(e), either from their respective posts on the options trading floor or in the trading crowd.

Specifically, proposed Phlx Rule 1063(e) sets forth the requirement that a floor broker or such floor broker's employees must, contemporaneously upon receipt of an order and prior to the representation of such an order in the crowd, record the required information regarding all option orders represented by such floor broker onto the System. Additionally, the proposed rule change provides that upon the execution of such an order, the floor broker would be required to enter the time of execution of the trade.[11]

Proposed Phlx Rule 1063(e) would require floor brokers or their employees to record the following specific information onto the System upon receipt of an order: (i) The order type (*i.e.*, customer, firm, broker-dealer); (ii) the option symbol; (iii) buy, sell, or cancel; (iv) call, put, complex (*i.e.*, spread, straddle), or contingency order

[4] *See* letter from Richard S. Rudolph, Director and Counsel, Phlx, to Nancy J. Sanow, Assistant Director, Division of Market Regulation (''Division''), Commission, dated July 31, 2003. In Amendment No. 2, the Exchange represents that it intends to implement supplementary surveillance and examination programs designed to address, among other things, trading ahead and front-running.

[5] *See* letter from Richard S. Rudolph, Director and Counsel, Phlx, to Jennifer Colihan, Special Counsel, Division, Commission, dated August 14, 2003. In Amendment No. 3, the Exchange proposes to clarify that in the event that floor brokers or their employees are required to record order information on trade tickets pursuant to proposed Phlx Rule 1063(e) due to a systems malfunction, they must enter the information recorded on trade tickets into AUTOM for inclusion in the electronic audit trail. In Amendment No. 3, the Exchange further proposes to exempt non-multiply listed index options, foreign currency, and other options traded exclusively on the Exchange other than equity options from the requirements of proposed Phlx Rule 1063.

[6] *See* letter from Richard S. Rudolph, Director and Counsel, Phlx, to Jennifer Colihan, Special Counsel, Division, Commission, dated October 9, 2003. In Amendment No. 4, the Exchange proposes to delete ''options traded on the Exchange other than equity options'' from the list of products it proposed to exempt from the requirements of proposed Phlx Rule 1063(e)(ii). The Exchange also commits to store information regarding products exempt from the requirements of proposed Phlx Rule 1063 in the same format used for non-exempt products. Further, the Exchange proposes to amend proposed Phlx Rule 1063 to provide that, until February 1, 2004, the requirement that floor brokers record order information into the FBMS prior to representing such orders in the trading crowd shall not apply to complex orders or other orders if a Floor Official makes a determination that there was an influx of orders at the time the floor broker received the order such that entry of the information required by the rule is not reasonably feasible. The Exchange also included provisions for documenting such a decision by a Floor Official.

[7] In Amendment No. 5, the Exchange proposes to delete the provisions in proposed Phlx Rule 1063 that provided that until February 1, 2004, the requirement that floor brokers record order information into the FBMS prior to representing such orders in the trading crowd shall not apply to complex orders or other orders if a Floor Official makes a determination that there was an influx of orders at the time the floor broker received the order such that entry of the information required by the rule is not reasonably feasible. Amendment No. 5 also clarifies how the Exchange would handle order data regarding Foreign Currency Options, Customized Foreign Currency Options and FLEX Options, and how the FBMS would identify the broker-dealer submitting an order. Finally, Amendment No. 5 provides that the requirements of proposed Phlx Rule 1063(e) would take effect on January 10, 2005.

[8] *See* Order Instituting Public Administrative Proceedings Pursuant to Section 19(h)(1) of the Securities Exchange Act of 1934, Making Findings and Imposing Sanctions, Securities Exchange Act Release No. 43268 (September 11, 2000) and Administrative Proceeding File 3–10282 (the ''Order'').

[9] 15 U.S.C. 78s(g).

[10] AUTOM is the Exchange's electronic order delivery, routing, execution and reporting system, which provides for the automatic entry and routing of equity option and index option orders to the Exchange trading floor. Orders delivered through AUTOM may be executed manually, or certain orders are eligible for AUTOM's automatic execution feature, AUTO–X. Equity option and index option specialists are required by the Exchange to participate in AUTOM and its features and enhancements. Option orders entered by Exchange members into AUTOM are routed to the appropriate specialist unit on the Exchange trading floor.

[11] Once the floor broker executes an order using the System, the time of execution would be automatically recorded into the electronic audit trail.

as described in Phlx Rule 1066; (v) number of contracts; (vi) limit price or market order or, in the case of a complex order, net debit or credit, if applicable; (vii) whether the transaction is to open or close a position; and (viii) The Options Clearing Corporation (''OCC'') clearing number of the broker-dealer that submitted the order. These enumerated elements of an order are currently written on trade tickets; the proposed new rule would simply require them to be entered onto the System. Upon entry of the order into the System, the System would automatically record the time of entry, and will assign an identification code that is particular to that order for purposes of the electronic audit trail.

With regard to FLEX, Foreign Currency, and Customized Foreign Currency Options, under proposed Phlx Rule 1063(f), floor brokers or their employees would be required to enter the above-described data elements into the Exchange's electronic audit trail in the same electronic format as the required information for equity and index options. Floor brokers or their employees must enter the required information for FLEX, Foreign Currency and Customized Foreign Currency Options into the electronic audit trail on the same business day that a specific event surrounding the lifecycle of an order in FLEX, Foreign Currency, or Customized Foreign Currency Options (including, without limitation, orders, price or size changes, execution or cancellation) occurs.

B. Ticket Marking Requirements and the System

Currently, various Exchange rules require floor brokers to mark trade tickets with certain notations, depending on the type of trade and the crowd participants involved. The Exchange is proposing to amend its rules concerning the ticket marking requirements so that floor brokers would be required to enter similar notations onto the System. For example, the Exchange is proposing to amend Phlx Rule 1015 and corresponding OFPA A–11 to require that a floor broker or his employees make the appropriate notice in the FBMS when an order is for the account of a broker/dealer. Also, by way of example, the Exchange is proposing to amend Phlx OFPA C–3 to require in the situation in which a floor broker represents an order for a market maker on another national securities exchange, such floor broker or his employees must so indicate on the FBMS and must ensure that the order is represented in the trading crowd as a ''BD'' order for the purposes of the Exchange's yielding requirements.

C. System Malfunctions

Proposed Phlx Rule 1063 would require that, in the event of a malfunction in the FBMS, floor brokers would be required to record the required information on trade tickets, and would not be permitted to represent an order for execution which has not been time stamped with the time of entry on the trading floor. Such trade tickets would be required to be time stamped upon the execution of such an order. This reflects the current practice of recording information concerning orders represented and executed by options floor brokers onto trade tickets, and using time stamps to record the time of receipt of an order, and the time of execution. Once it is determined that such malfunction no longer exists, floor brokers or their employees would be required to enter the required information that is recorded on such trade tickets into AUTOM, using the FBMS, for inclusion in the electronic audit trail.

D. Clearing Information

Proposed Phlx Rule 1063(e) would require floor brokers or their employees to enter clearing information onto the FBMS no later than five minutes after the execution of a trade. Such clearing information would be required to include the account number(s) of each contra-side participant to the floor broker's trade in the crowd and the number of contracts bought or sold, which would be immediately reported via AUTOM to the clearing firm of each crowd participant involved in the trade. Once the clearing information is reported, crowd participants involved in the trade would receive a position update, enabling them to know their respective positions on a real-time basis and to make appropriate, informed and timely hedging and transactional decisions.

E. Trade Reporting

Currently, Exchange members or member organizations that initiate an options transaction are required to report the execution of such trades within 90 seconds of the execution.[12] The FBMS includes a feature that would report transactions executed in the trading crowd by the floor broker automatically upon execution. Once a trade involving a floor broker is executed in the trading crowd, such a floor broker would simply indicate on the system that the order was executed, which would automatically generate an electronic report.

The Exchange is also proposing amendments to Phlx Rule 1051 and OFPA F–2 in order to address the situation in which a floor broker who initiates a transaction executes all or a portion of the transaction against a contra-side limit order on the specialist's limit order book.[13] Currently, in such a situation, the specialist manually executes the booked limit order on the AUTOM System against the order represented by the floor broker. Upon such manual execution, the transaction is reported automatically by AUTOM.

The proposed amendment would require that when an order represented by a floor broker is executed against a limit order on the book, the specialist must report or ensure that the portion of the transaction represented by such specialist is reported to the tape. The purpose of this provision is to address the situation in which an order represented by a floor broker executes a booked limit order is executed by the specialist, in which case AUTOM automatically reports the execution of the booked limit order. Thus, the floor broker in this situation would not be required to report that portion of the transaction on the System, despite the fact that the floor broker involved may have in fact ''initiated'' the transaction. If the booked limit order represents the entire contra-side to the order represented by the floor broker, the specialist would be required to report the entire transaction. If the booked limit order represents a portion of the transaction, the specialist would be required to report that portion of the transaction, while the floor broker initiating the transaction would be responsible for reporting the remaining portion of the transaction he or she initiated.

IV. Discussion

After careful consideration, the Commission finds that the proposed rule change is consistent with Act and the rules and regulations thereunder applicable to a national securities

[12] Phlx Rule 1051 and OFPA F–2 currently provide that a member or member organization initiating an options transaction, whether acting as principal or agent, must report or ensure that the transaction is reported within 90 seconds of the execution to the tape. Transactions not reported within 90 seconds after execution shall be designated as late.

[13] The electronic ''limit order book'' is the Exchange's automated specialist limit order book, which automatically routes all unexecuted AUTOM orders to the book and displays orders real-time in order of price-time priority. Orders not delivered through AUTOM may also be entered onto the limit order book. *See* Phlx Rule 1080, Commentary .02.

exchange.[14] In particular the Commission finds that the proposed rule change is consistent with Section 6(b)(5) of the Act,[15] which requires among other things, that the Exchange's rules be designed to promote just and equitable principles of trade, to remove impediments and to perfect the mechanism of a free and open market and a national market system, and in general, to protect investors and the public interest.

The Commission believes that the rules as proposed should allow the Exchange to comply with its obligations under the Order in that they will result in the creation of an audit trail that incorporates manual orders sent to Phlx. Specifically, the proposed rules would require that Phlx floor brokers enter certain order details contemporaneously upon receipt and prior to representation into the FBMS. Once an order is entered into the FBMS, the System would automatically timestamp the order as received by the Exchange and assign it a unique order identification number, which allows the system to track the order through its life on the floor up to the point of execution. Upon execution, the floor broker would enter the time the execution took place. Floor brokers or their employees would then be required to enter clearing information onto the FBMS no later than five minutes after the execution of a trade.

The Commission also believes that the Exchange's plan for recording order details in the event of a systems outage or malfunction is reasonable. In the event of a systems outage or malfunction, floor brokers would revert to use of trade tickets and would record on those tickets the times that various events occur in the life of the order. Further, the Exchange would ensure that the information recorded on trade tickets is entered into AUTOM so that it can be incorporated into the electronic audit trail.

Finally, the Commission notes that the Exchange acknowledges the need for effective and proactive surveillance for activities such as trading ahead and front-running. The Exchange represents that it currently conducts automated surveillance for such activities and will incorporate a review of order entry into the System as part of such surveillance. Further, the Exchange states that it also intends to implement supplementary surveillance and examination programs related to the requirement to enter order information into the FBMS, which will be designed to address, among other things, trading ahead and front-running. The Commission views effective surveillance relating to the use of the FBMS as critical to the integrity of COATS and expects that the Exchange will inform the Commission of any problems it encounters in conducting effective surveillance.

The Commission finds good cause for approving Amendments No. 2, 3, 4, and 5 to the proposed rule change, prior to the thirtieth day after the date of the publication of notice thereof in the **Federal Register**. The Commission notes that the amendments would more closely conform the Phlx's rules to those of the other options exchanges, the rules for which were subject to notice and comment. The Commission believes that because the proposed amendments raise no new issues of regulatory concern, it is appropriate to accelerate approval of these amendments so that the rules may be implemented on a timely basis.

V. Solicitation of Comments

Interested persons are invited to submit written data, views, and arguments concerning the foregoing, including whether the proposed rule change is consistent with the Act. Comments may be submitted by any of the following methods:

Electronic Comments

- Use the Commission's Internet comment form *http://www.sec.gov/rules/sro.shtml*; or
- Send an E-mail to *rule-comments@sec.gov. Please include SR–Phlx–2003–40 on the subject line.*

Paper Comments

- Send paper comments in triplicate to Jonathan G. Katz, Secretary, Securities and Exchange Commission, 450 Fifth Street, NW., Washington, DC 20549–0609. All submissions should refer to SR–Phlx–2003–40. This file number should be included on the subject line if e-mail is used. To help the Commission process and review your comments more efficiently, please use only one method. The Commission will post all comments on the Commission's Internet Web site *http://www.sec.gov/rules/sro.shtml*. Copies of the submission, all subsequent amendments, all written statements with respect to the proposed rule change that are filed with the Commission, and all written communications relating to the proposed rule change between the Commission and any person, other than those that may be withheld from the public in accordance with the provisions of 5 U.S.C. 552, will be available for inspection and copying in the Commission's Public Reference Section, 450 Fifth Street, NW., Washington, DC 20549. Copies of such filing also will be available for inspection and copying at the principal office of the Exchange. All comments received will be posted without change; the Commission does not edit personal identifying information from submissions. You should submit only information that you wish to make available publicly. All submissions should refer to SR–Phlx–2003–40 and should be submitted on or before February 3, 2005.

VI. Conclusion

For all of the aforementioned reasons, the Commission finds that the proposed rule change is consistent with the requirements of the Act and the rules and regulations thereunder applicable to a national securities exchange.

It is therefore ordered, pursuant to Section 19(b)(2) of the Act,[16] that the proposed rule change (SR–Phlx–2003–40), as amended, is approved, and Amendments No. 2, 3, 4, and 5 are approved on an accelerated basis.

For the Commission, by the Division of Market Regulation, pursuant to delegated authority.[17]

Jill M. Peterson,

Assistant Secretary.

[FR Doc. E5–123 Filed 1–12–05; 8:45 am]

BILLING CODE 8010–01–P

[14] In approving this proposal, the Commission has considered the proposed rule's impact on efficiency, competition and capital formation. 15 U.S.C. 78c(f).

[15] 15 U.S.C. 78f(b)(5).

[16] 15 U.S.C. 78s(b)(2).

[17] 17 CFR 200.30–3(a)(12).

SOCIAL SECURITY ADMINISTRATION

Demonstration Project for Direct Payment to Non-Attorney Representatives

AGENCY: Social Security Administration (SSA).

ACTION: Notice.

SUMMARY: Section 303 of the Social Security Protection Act of 2004 (SSPA), Public Law No. 108–203, requires the Commissioner of Social Security (the Commissioner) to develop and implement a five-year nationwide demonstration project that will extend to certain non-attorney representatives of claimants under titles II and XVI of the Social Security Act (the Act) the option to have approved representatives' fees withheld and paid directly from a beneficiary's past-due benefits. Currently, this option is available only to representatives who are attorneys. Non-attorney

representatives who wish to participate in the demonstration project must meet the prerequisites specified in section 303 of the SSPA, and any additional prerequisites that the Commissioner may prescribe. The purpose of this notice is to provide information about the prerequisites that non-attorney representatives will be required to satisfy and about our plans for administering the prerequisites process. We will post further details about the prerequisites process (*e.g.*, when and how to apply) on our Web site at *http://www.socialsecurity.gov* when they become available.

FOR FURTHER INFORMATION CONTACT: Joanne Butler, Social Security Administration, Office of Hearings and Appeals, Suite 1608, 5107 Leesburg Pike, Falls Church, VA 22041–3255, (703) 605–8314.

SUPPLEMENTARY INFORMATION: Section 303 of the SSPA sets forth certain minimum prerequisites that non-attorney representatives must satisfy to be eligible to participate in the demonstration project on direct payment of fees to non-attorneys, and allows the Commissioner to establish additional prerequisites that must be satisfied. Section 303 also provides that the Commissioner may assess representatives reasonable fees to cover our costs in administering the prerequisites process.

In this notice, we provide certain details of the application process and announce that satisfaction of a representational experience requirement will be an additional prerequisite for participating in the demonstration project. The notice also advises the public of the amount of the fee that applicants will be assessed. In addition, we provide details concerning the specific criteria that we will use to evaluate whether the applicant has satisfied the following prerequisites:

- Qualifications equivalent to a bachelor's degree;
- Experience in representing claimants before SSA;
- Liability insurance or equivalent insurance adequate to protect claimants in the event of malpractice by the representative;
- Criminal background check that ensures a representative's fitness to practice before the Commissioner; and
- Examination testing knowledge of the relevant provisions of the Act and the most recent developments in Agency and court decisions affecting titles II and XVI of the Act.

We anticipate that we will use a commercial contractor to assist us in determining eligibility to participate in the demonstration project. A competitive process for selecting a contractor is underway. We will provide updated information regarding the contract award, and further information about the prerequisites process (*e.g.*, when and how to apply) at our Web site at *http://www.socialsecurity.gov*.

The SSPA also requires non-attorney representatives to take continuing education classes, including courses in ethics and professional conduct. This requirement will pertain to those non-attorney representatives who have been found eligible to participate in the demonstration project. The SSPA gives us the authority to determine the minimum amount of continuing education required, and the standards for the classes. We intend to issue a subsequent **Federal Register** notice to address this requirement.

1. *Application periods and completion of an application:* We intend to structure the contract for administering the prerequisites process for the five-year demonstration project with an initial year and four option years. There will be two application periods during the initial year, with the second examination to take place four months after the first examination. During the four option years, there will be one application period and examination per option year. A non-attorney representative who is found not to be eligible to participate during one application period will be able to re-apply during any subsequent application period.

A person applying to participate in the demonstration project will have to complete an application form. We intend to have the form available online at the contractor's Web site for applicants to print out, sign (in ink), and submit. Within four weeks of the opening of the application period, the applicant must submit a complete application package. A complete application package consists of the completed application form and:

- Receipt from the applicant's insurance company for professional liability coverage or equivalent insurance in the minimum amount and type specified by us (see below);
- Official college and/or university transcript(s) showing the stamp or raised seal of the institution, or otherwise establishing that it is an official copy;
- Official high school transcript or GED certificate or an equivalent graduation record from an official source (*e.g.*, board of education), if the applicant has not attended a college or university,
- Names and the last four digits of the Social Security numbers of five claimants for whom the applicant has provided representational services and the dates of such services (*see* section 4. below for details); and
- Fee payment of $1000 (see below).

Persons who fail to have their completed package materials postmarked by the application deadline will have their applications rejected. However, they may re-apply to participate in the demonstration project during a subsequent application period.

2. *Application fee:* SSPA section 303(c)(1) provides that the Commissioner may assess applicants a reasonable fee to cover the costs of administering the prerequisites process. We have determined that:

- The fee will be $1000 (in U.S. dollars) per applicant;
- Applicants must include the fee payment with their application package;
- The fee will be non-refundable except in the following circumstance: If the contractor fails to administer an examination and the failure is due to the contractor's fault, the contractor will be required, as a performance penalty, to refund the fee to those affected applicants who do not take the rescheduled examination;
- Acceptable forms of fee payment will be by certified check, money order, a check drawn from a private firm's account, or credit card;
- Applicants will pay their fees to the contractor; and
- Applicants who are not found to be eligible may reapply during the next application phase, but they will pay the full fee upon reapplying.

3. *Education and equivalent qualifications:* SSPA section 303(b)(1) establishes a bachelor's degree from an accredited institution of higher education as a prerequisite for participating in the demonstration project. However, this section also permits applicants who do not have a bachelor's degree to satisfy this prerequisite based on combinations of training and work experience that the Commissioner determines to be equivalent to a bachelor's degree. We have determined that any of the following combinations of education and experience shall be equivalent to having a bachelor's degree:

- If the applicant does not have a bachelor's degree, but has three years or more of undergraduate study at an accredited institution of higher learning, the applicant must have at least one year of relevant professional experience (as defined below), at least six months of which must have involved claims for

benefits under title II or title XVI of the Act;

• If the applicant has at least two, but less than three years of undergraduate study at an accredited institution of higher learning, the applicant must have at least two years of relevant professional experience, at least one year of which must have involved claims for benefits under title II or title XVI of the Act;

• If the applicant has at least one, but less than two years of undergraduate study at an accredited institution of higher learning, the applicant must have at least three years of relevant professional experience, at least two years of which must have involved claims for benefits under title II or XVI of the Act; or

• If the applicant has less than one year of undergraduate study at an accredited institution of higher learning, or no undergraduate education, the applicant must have received a high school diploma or GED certificate and have at least four years of relevant professional experience, at least two years of which must have involved claims for benefits under title II or title XVI of the Act.

Relevant professional experience (for purposes of establishing qualifications equivalent to a bachelor's degree) is work through which the applicant has demonstrated familiarity with medical reports and an ability to describe and assess mental and/or physical limitations. Such experience may be from the fields of: Teaching, counseling or guidance, social work, personnel management, public employment service, and/or nursing or other health care professional services. Any work involving claims for benefits under title II or title XVI of the Act shall also be defined as relevant professional experience. We intend to have the contractor post on its Web site additional information regarding qualifying professional experience.

An applicant who fails to submit proof of a bachelor's degree or equivalent qualifications before the application period closes shall be precluded from establishing, based on his or her current application, eligibility to take the examination and to participate in the demonstration project. However, the applicant may re-apply to participate in the demonstration project during a subsequent application period.

An applicant may possess a law degree (*e.g.*, juris doctor); however, attorneys who already qualify to have their approved representatives' fees paid directly from their clients' past-due benefits pursuant to sections 206 and 1631(d)(2) of the Act will be ineligible to participate in this demonstration project. In addition, attorneys who are suspended or disbarred by a State or Federal court or disqualified from appearing before a Federal agency or program will be ineligible to participate in this demonstration project.

4. *Representational experience requirement:* SSPA section 303(b) permits the Commissioner to establish additional prerequisites. We have determined that all participants in the demonstration project (with or without a bachelor's degree) must have demonstrated experience in representing claimants before SSA. Applicants must meet the following minimum representational experience requirement:

• The applicant must have provided representational services as the appointed representative for five claimants within a 24-month period;

• The services may include representing the claimant at the time at which SSA decided the case at any administrative level or, in cases that have not yet been decided, appearing as the claimant's representative at a hearing before an SSA Administrative Law Judge (ALJ); and

• The 24-month period must occur within the 60 months preceding the month in which the application was filed.

The following is an example of how to calculate the 24- and 60-month periods for establishing representational experience:

• The applicant files his or her application in March 2005.

• The 60-month period begins on March 1, 2000, and ends on February 28, 2005 (the last day of the month before the filing of the application).

• The 24-month period can occur at any time between March 1, 2000, and February 28, 2005. For example, the applicant would meet the requirement if he or she served as the appointed representative for five separate claimants during the period from January 2001 through December 2002.

Applicants are required to submit with their applications the names and the last four digits of the Social Security numbers of five claimants for whom the applicant provided representational services during the appropriate 24-month period. Applicants also are required to provide the dates of their service for each applicant (*e.g.*, date of the hearing before the SSA ALJ).

5. *Insurance requirement:* SSPA section 303(b)(3) sets forth a requirement that non-attorney participants have professional liability insurance, or equivalent insurance, which the Commissioner has determined to be adequate to protect claimants in the event of malpractice by the non-attorney representative. We have determined that applicants must have professional liability insurance for coverage of errors and omissions committed by the non-attorney representative, with a minimum total annual amount of coverage of $1 million (for all incidents in that year) plus coverage of $250,000 per incident. The insurance policy must be underwritten by a firm that is licensed to provide insurance in the State in which the non-attorney representative conducts business. The policy also must provide coverage for professional liability insurance claims made in those States in which the non-attorney representative represents claimants before us.

An applicant who fails to submit proof of the required insurance before the application period closes shall be precluded from establishing, based on his or her current application, eligibility to take the examination and to participate in the demonstration project. However, the applicant may re-apply to participate in the demonstration project during a subsequent application period.

Non-attorney representatives who establish eligibility to participate in the demonstration project will be required to maintain their insurance coverage in order to continue to receive direct fee payments from SSA.

6. *Criminal background investigation:* SSPA section 303(b)(4) sets forth a requirement for a criminal background check of each non-attorney representative who applies to participate in the demonstration project to ensure his or her fitness to practice before us. We will reject any applicant who:

• Has been suspended or disqualified from practice before SSA;

• Has had a judgment or lien assessed against him/her by a civil court for malpractice and/or fraud;

• Has had a felony conviction;

• Engages in substantial misrepresentation in submitting his or her application and/or supporting materials for the application;

• Fails to pass an SSA administrative records check (check of SSN, etc.); or

• Fails to provide documentation as requested by SSA's contractor to perform the criminal background investigation.

An applicant who fails the criminal background investigation will have the opportunity to protest that finding to us. Our action in response to the protest will be final and not subject to appeal.

7. *Passing an examination:* SSPA section 303(b)(2) requires that

applicants pass an examination testing their knowledge of the relevant provisions of the Act and the most recent developments in Agency and court decisions affecting titles II and XVI of the Act. With the assistance of contractor personnel, we will develop a 40- to 50-question, multiple choice examination. Examination details are as follows:

- A score of 70 will be a passing score;
- The examination instrument will be written in the English language only;
- We anticipate that the examination will be administered by the contractor and will be given only once, on a weekday, in association with each application period;
- During the examination, test-takers will have open-book access to certain reference materials that we will supply (*see* below for details);
- The examination will be based upon situations that arise from the subject areas contained in the reference materials; and
- Applicants will not be permitted to remove the examination instrument from the examination center.

Open-book reference materials: We will provide each test-taker with a copy of 20 CFR Ch. III (most recent edition), and the Compilation of the Social Security Laws, Volume 1 (most recent edition). We may provide additional materials; if so, we will provide details about the materials on the contractor's Web site. Applicants will not be permitted to bring any other items (including reference materials) to the examination center.

An applicant who fails to achieve a passing score may re-apply to participate in the demonstration project during a subsequent application period.

(Catalog of Federal Domestic Assistance Program Nos. 96.001, Social Security—Disability Insurance; 96.002, Social Security—Retirement Insurance; 96.004, Social Security—Survivors Insurance; and 96.006, Supplemental Security Income)

Dated: December 30, 2004.

Fritz Streckewald,

Assistant Deputy Commissioner for Program Policy for Disability and Income Security Programs.

[FR Doc. 05–729 Filed 1–12–05; 8:45 am]

BILLING CODE 4191–02–P

DEPARTMENT OF STATE

[Public Notice 4956]

Culturally Significant Objects Imported for Exhibition Determinations: ''The Kingdom of Siam: Art of Central Thailand, 1350–1800''

AGENCY: Department of State.

ACTION: Notice.

SUMMARY: Notice is hereby given of the following determinations: Pursuant to the authority vested in me by the Act of October 19, 1965 (79 Stat. 985; 22 U.S.C. 2459), Executive Order 12047 of March 27, 1978, the Foreign Affairs Reform and Restructuring Act of 1998 (112 Stat. 2681, *et seq.*; 22 U.S.C. 6501 note, *et seq.*), Delegation of Authority No. 234 of October 1, 1999, Delegation of Authority No. 236 of October 19, 1999, as amended, and Delegation of Authority No. 257 of April 15, 2003 [68 FR 19875], I hereby determine that the objects to be included in the exhibition ''The Kingdom of Siam: Art of Central Thailand, 1350–1800,'' imported from abroad for temporary exhibition within the United States, are of cultural significance. The objects are imported pursuant to loan agreements with the foreign owners. I also determine that the exhibition or display of the exhibit objects at the Asian Art Museum, San Francisco, CA, from on or about February 18, 2005, to on or about May 8, 2005; Peabody Essex Museum, Salem, MA, from on or about July 16, 2005, to on or about October 16, 2005, and at possible additional venues yet to be determined, is in the national interest. Public Notice of these Determinations is ordered to be published in the **Federal Register**.

FOR FURTHER INFORMATION CONTACT: For further information, including a list of the exhibit objects, contact Julianne Simpson, Attorney-Adviser, Office of the Legal Adviser, U.S. Department of State, (telephone: (202) 453–8049). The address is U.S. Department of State, SA–44, 301 4th Street, SW., Room 700, Washington, DC 20547–0001.

Dated: January 7, 2005.

C. Miller Crouch,

Principal Deputy Assistant Secretary for Educational and Cultural Affairs, Department of State.

[FR Doc. 05–739 Filed 1–12–05; 8:45 am]

BILLING CODE 4710–08–P

DEPARTMENT OF STATE

[Public Notice 4930]

Notice of Meeting—United States International Telecommunication Advisory Committee

The Department of State announces a meeting of the ITAC. The purpose of the Committee is to advise the Department on matters related to telecommunication and information policy matters in preparation for international meetings pertaining to telecommunication and information issues.

The ITAC will meet to discuss the matters related to the meeting of the ITU Council's Ad Hoc Group on Cost Recovery for Satellite Network Filings that will take place 21 and 22 March 2005 in Geneva, Switzerland. The ITAC meeting will be convened on 27 January 2005 from 2 to 4 p.m. in Room 6 South (6B516) at the Federal Communications Commission (FCC). The FCC is located at 445 12th Street, SW., Washington, DC.

Members of the public will be admitted to the extent that seating is available and may join in the discussions subject to the instructions of the Chair. Entrance to the FCC is controlled. Persons planning to attend the meeting should arrive early enough to complete the entry procedure. One of the following current photo identifications must be presented to gain entrance to the FCC: U.S. driver's license with your photo on it, U.S. passport, or U.S. Government identification.

Dated: January 4, 2005.

Douglas R. Spalt,

International Communications and Information Policy, Department of State.

[FR Doc. 05–742 Filed 1–12–05; 8:45 am]

BILLING CODE 4710–45–P

DEPARTMENT OF STATE

[Public Notice 4931]

Shipping Coordinating Committee; Notice of Meeting

The Shipping Coordinating Committee (SHC) will conduct an open meeting at 9:30 a.m. on Tuesday, February 8, 2005, in Room 6103 of the United States Coast Guard Headquarters Building, 2100 2nd Street, SW., Washington, DC 20593–0001. The primary purpose of the meeting is to prepare for the 48th session of the Sub-Committee on Ship Design and Equipment (DE) to be held at the International Maritime Organization (IMO) Headquarters in London, England

from February 21st to February 25th, 2005.

The primary matters to be considered include:

—Amendments to resolution A.744(18) regarding longitudinal strength of tankers;
—Large passenger ship safety;
—Measures to prevent accidents with lifeboats;
—Protection of fuel tanks;
—Anchoring, mooring and towing equipment;
—Compatibility of life-saving appliances;
—Performance testing and approval standards for SOLAS personal life-saving appliances;
—Review of the 2000 HSC Code and amendments to the DSC Code and the 1994 HSC Code;
—Consideration of IACS unified interpretations;
—Inspection and survey requirements for accommodation ladders;
—Safety aspects of ballast water management;
—Revision of the Guidelines for systems for handling oily wastes in machinery spaces of ships (MEPC/Circ.235);
—Development of provisions for gas-fuelled ships;
—Performance standards for protective coatings;
—Free-fall lifeboats with float-free capability;
—Guidelines on on-board exhaust gas cleaning systems;
—Mandatory emergency towing systems in ships other than tankers greater than 20,000 dwt;
—Test standards for extended service intervals of inflatable liferafts;
—Review of the Offshore Supply Vessel Guidelines.

Hard copies of documents associated with the 48th session of DE will be available at this meeting. To request further copies of documents please write to the address provided below.

Members of the public may attend this meeting up to the seating capacity of the room. Interested persons may seek information by writing to Mr. Wayne Lundy, Commandant (G–MSE–3), U.S. Coast Guard Headquarters, 2100 Second Street, SW., Room 1300, Washington, DC 20593–0001 or by calling (202) 267–0024.

Dated: January 5, 2005.

Clay Diamond,

Executive Secretary, Shipping Coordinating Committee, Department of State.

[FR Doc. 05–743 Filed 1–12–05; 8:45 am]

BILLING CODE 4710–09–P

DEPARTMENT OF STATE

[Public Notice 4932]

Shipping Coordinating Committee; Notice of Meeting

The U.S. Shipping Coordinating Committee (SHC) will conduct an open meeting at 10 a.m. on Tuesday, 12 April 2005 in Room 4342 at the Department of Transportation, 400 7th & D Streets, SW., Washington, DC 20590–0001. The purpose of this meeting is to prepare for the Ninetieth Session of the International Maritime Organization's (IMO) Legal Committee (LEG 90) scheduled from 18–29 April 2005.

The provisional LEG 90 agenda calls for the Legal Committee to review the Convention for the Suppression of Unlawful Acts against the Safety of Maritime Navigation, 1988, and its Protocol of 1988 relating to Fixed Platforms Located on the Continental Shelf (SUA Convention and Protocol). Work on the SUA amendments will occur during the first week (18–22 April) of the two week LEG 90 session. Also on the agenda is the further examination of the draft Wreck Removal Convention. To be addressed as well are the Provisions of Financial Security which includes a progress report on the work of the Joint IMO/ILO Ad Hoc Expert Working Group on Liability and Compensation regarding claims for Death, Personal Injury and Abandonment of Seafarers; and includes follow-up resolutions adopted by the International Conference on the Revision of the Athens Convention relating to the Carriage of Passengers and their Luggage by Sea, 1974. The Legal Committee will examine Fair Treatment of Seafarers, with a report of the first session of the Joint IMO/ILO Ad Hoc Expert Working Group on Fair Treatment of Seafarers which will take place from 17–19 January 2005. Also on the LEG 90 agenda are places of refuge, monitoring of the implementation of the HNS Convention, and matters arising from the ninety-third session of the Council. Finally the committee will review technical cooperation: subprogramme for maritime legislation, review the status of Conventions and other treaty instruments adopted as a result of the work of the Legal Committee, in addition to allotting time to address any other issues that may arise on the Legal Committee's work program.

Members of the public are invited to attend the SHC meeting up to the seating capacity of the room. To facilitate the building security process, those who plan to attend should call or send an e-mail two days before the meeting. Upon request, participating by phone may be an option. For further information please contact Captain William Baumgartner or Lieutenant Martha Rodriguez, at U.S. Coast Guard, Office of Maritime and International Law (G–LMI), 2100 Second Street, SW., Washington, DC 20593–0001; e-mail *mrodriguez@comdt.uscg.mil,* telephone (202) 267–1527; fax (202) 267–4496.

Dated: January 5, 2005.

Clayton L. Diamond,

Executive Secretary, Shipping Coordinating Committee, Department of State.

[FR Doc. 05–744 Filed 1–12–05; 8:45 am]

BILLING CODE 4710–09–P

DEPARTMENT OF TRANSPORTATION

Federal Aviation Administration

Noise Exposure Map Notice: Receipt of Noise Compatibility Program and Request for Review for Missoula International Airport, Missoula, MT

AGENCY: Federal Aviation Administration, DOT.

ACTION: Notice.

SUMMARY: The Federal Aviation Administration (FAA) announces its determination that the noise exposure maps (NEM) submitted by the airport director for Missoula International Airport under the provisions of 49 U.S.C. 47501 *et. seq* (Aviation Safety and Noise Abatement Act) and 14 CFR part 150 are in compliance with applicable requirements. The FAA also announces that it is reviewing a proposed noise compatibility program that was submitted for Missoula International Airport under part 150 in conjunction with the noise exposure map, and that this program will be approved or disapproved on or before July 2, 2005.

EFFECTIVE DATE: The effective date of the FAA's determination on the noise exposure maps and of the start of its review of the associated noise compatibility program is January 3, 2005. The public comment period ends March 4, 2005.

FOR FURTHER INFORMATION CONTACT: Dennis Ossenkop, Federal Aviation Administration, Airports Division, 1601 Lind Ave. SW., Renton, WA, 98055–4056, telephone 425–227–2611. Comments on the proposed noise compatibility program should also be submitted to the above office.

SUPPLEMENTARY INFORMATION: This notice announces that the FAA finds that the noise exposure maps submitted for Missoula International Airport are in

compliance with applicable requirements of part 150, effective January 3, 2005. Further, the FAA is reviewing a proposed noise compatibility program for that airport which will be approved or disapproved on or before July 2, 2005. This notice also announces the availability of this program for public review and comment.

Under 49 U.S.C., 47503 (the Aviation Safety and Noise Abatement Act, hereinafter referred to as ''the Act''), an airport operator may submit to the FAA noise exposure maps which meet applicable regulations and which depict non-compatible land uses as of the date of submission of such maps, a description of projected aircraft operations, and the ways in which such operations will affect such maps. The Act requires such maps to be developed in consultation with interested and affected parties in the local community, government agencies, and persons using the airport.

An airport operator who has submitted noise exposure maps that are found by the FAA to be in compliance with the requirements of Federal Aviation Regulations (FAR) part 150, promulgated pursuant to the Act, may submit a noise compatibility program for FAA approval which sets forth the measures the operator has taken or proposes to take to reduce existing non-compatible uses and prevent the introduction of additional noncompatible uses.

The Acting Director of the Missoula International Airport submitted to the FAA on January 4, 2005, noise exposure maps, descriptions and other documentation that were January 4, 2005, noise exposure maps, descriptions and other documentation that were produced during the Missoula International Airport FAR part 150 Study dated May 2004 and a Supplemental Report dated June 2004. It was requested that the FAA review this material as the noise exposure maps, as described in section 47503 of the Act, and that the noise mitigation measures, to be implemented jointly by the airport and surrounding communities, be approved as a noise compatibility program under section 47504 of the Act.

The FAA has completed its review of the noise exposure maps and related descriptions submitted by the director of the Missoula International Airport. The specific documentation determined to constitute the noise exposure maps includes the following from the *Missoula International Airport FAR Part 150 Study of May 2004 and Supplemental Report of June 2004:*

- Figure S1 at page S.4, Existing Noise Exposure Map, 2003;
- Figure S2 at page S.7, Future Noise Exposure Map, 2009;
- Figures C9 and C10 noise monitoring locations;
- Figure C11 at page C.35 Departure Flight Tracks;
- Figure C12 at page C.36 Arrival Flight Tracks;
- Table S1 at page S.2 Revised Summary of Aviation Forecasts 2003–2023 and additional aviation activity data;
- Table S3 at page S.5 Existing Land Use Within Existing Noise Contours 2003 presents estimates of the number of persons residing with the DNL 55, 60, and 65 noise contours;
- Table S4 at page S.6 Future Noise Exposure Map with Existing Land Use, 2009, presents estimates of the number of persons residing with the DNL 55, 60, and 65 noise contours;
- Appendix H in the Revised Report volume and starting at page S.32 in the Supplemental Report Consultation actions.
- There are no properties on or eligible for inclusion in the National Register of Historic Places with the DNL 65 noise contour.

The FAA has determined that these maps for Missoula International Airport are in compliance with applicable requirements. This determination is effective on January 3, 2005. The FAA's determination on an airport operator's noise exposure maps is limited to a finding that the maps were developed in accordance with the procedures contained in appendix A of FAR part 150. Such determination does not constitute approval of the applicant's data, information or plans, or constitute a commitment to approve a noise compatibility program or to fund the implementation of that program.

If questions arise concerning the precise relationship of specific properties to noise exposure contours depicted on a noise exposure map submitted under section 47503 of the Act, it should be noted that the FAA is not involved in any way in determining the relative locations of specific properties with regard to the depicted noise contours, or in interpreting the noise exposure maps to resolve questions concerning, for example, which properties should be covered by the provisions of section 47506 of the Act. These functions are inseparable from the ultimate land use control and planning responsibilities of local government. These local responsibilities are not changed in any way under part 150 or through the FAA's review of noise exposure maps. Therefore, the responsibility for the detailed overlaying of noise exposure contours onto the map depicting properties on the surface rests exclusively with the airport operator that submitted those maps, or with those public agencies and planning agencies with which consultation is required under section 47503 of the Act. The FAA has relied on the certification by the airport operator, under section 150.21 of FAR part 150, that the statutorily required consultation has been accomplished.

The FAA has formally received the noise compatibility program for Missoula International Airport, also effective on January 2, 2005. Preliminary review of the submitted material indicates that it conforms to the requirements for the submittal of noise compatibility programs, but that further review will be necessary prior to approval or disapproval of the program. The formal review period, limited by law to a maximum of 180 days, will be completed on or before July 2, 2005.

The FAA's detailed evaluation will be conducted under the provisions of 14 CFR part 150, section 150.33. The primary considerations in the evaluation process are whether the proposed measures may reduce the level of aviation safety, create an undue burden on interstate or foreign commerce, or be reasonably consistent with obtaining the goal of reducing existing non-compatible land uses and preventing the introduction of additional non-compatible land uses.

Interested persons are invited to comment on the proposed program with specific reference to these factors. The FAA will consider all comments, other than those properly addressed to local land use authorities, to the extent practicable. Copies of the noise exposure maps, the FAA's evaluation of the maps, and the proposed noise compatibility program are available for examination at the following locations:
Federal Aviation Administration, Airports Division, 1601 Lind Avenue, SW., Suite 315, Renton, Washington.
Helena Airports District Office, FAA Building, Suite 2, Helena, Montana.
Missoula International Airport, 5225 Highway 10 West, Missoula, Montana.

Questions may be directed to the individual named above under the heading, **FOR FURTHER INFORMATION CONTACT.**

Issued in Renton, Washington, January 3, 2005.

David A. Field,

Acting Manager, Airports Division, Northwest Mountain Region.

[FR Doc. 05–668 Filed 1–12–05; 8:45 am]

BILLING CODE 4910–13–M

DEPARTMENT OF TRANSPORTATION

Federal Aviation Administration

[Summary Notice No. PE–2004–92]

Petitions for Exemption; Summary of Petitions Received

AGENCY: Federal Aviation Administration (FAA), DOT.

ACTION: Notice of petitions for exemption received.

SUMMARY: Pursuant to FAA's rulemaking provisions governing the application, processing, and disposition of petitions for exemption part 11 of Title 14, Code of Federal Regulations (14 CFR), this notice contains a summary of certain petitions seeking relief from specified requirements of 14 CFR, dispositions of certain petitions previously received, and corrections. The purpose of this notice is to improve the public's awareness of, and participation in, this aspect of FAA's regulatory activities. Neither publication of this notice nor the inclusion or omission of information in the summary is intended to affect the legal status of any petition or its final disposition.

DATES: Comments on petitions received must identify the petition docket number involved and must be received on or before February 2, 2005.

ADDRESSES: You may submit comments [identified by DOT DMS Docket Number FAA–200X–XXXXX] by any of the following methods:

- *Web site: http://dms.dot.gov.* Follow the instructions for submitting comments on the DOT electronic docket site.
- *Fax:* 1–202–493–2251.
- *Mail:* Docket Management Facility; U.S. Department of Transportation, 400 Seventh Street, SW., Nassif Building, Room PL–401, Washington, DC 20590–0001.
- *Hand Delivery:* Room PL–401 on the plaza level of the Nassif Building, 400 Seventh Street, SW., Washington, DC, between 9 a.m. and 5 p.m., Monday through Friday, except Federal Holidays.
- *Federal eRulemaking Portal:* Go to *http://www.regulations.gov.* Follow the online instructions for submitting comments.

Docket: For access to the docket to read background documents or comments received, go to *http://dms.dot.gov* at any time or to Room PL–401 on the plaza level of the Nassif Building, 400 Seventh Street, SW., Washington, DC, between 9 a.m. and 5 p.m., Monday through Friday, except Federal Holidays.

FOR FURTHER INFORMATION CONTACT: Tim Adams (202) 267–8033, Sandy Buchanan-Sumter (202) 267–7271, Office of Rulemaking (ARM–1), Federal Aviation Administration, 800 Independence Avenue, SW., Washington, DC 20591.

This notice is published pursuant to 14 CFR 11.85 and 11.91.

Issued in Washington, DC, on January 7, 2005.

Anthony F. Fazio,

Director, Office of Rulemaking.

Petitions for Exemption

Docket No.: FAA–2004–19884.

Petitioner: Orbital Sciences Corporation.

Section of 14 CFR Affected: 14 CFR 91.223(b) and (c).

Description of Relief Sought: To allow Orbital Sciences Corporation, to operate its aircraft after March 29, 2005, without an approved terrain awareness and warning system properly installed on the aircraft.

[FR Doc. 05–749 Filed 1–12–05; 8:45 am]

BILLING CODE 4910–13–P

DEPARTMENT OF TRANSPORTATION

Federal Aviation Administration

[Summary Notice No. PE–2004–93]

Petitions for Exemption; Summary of Petitions Received

AGENCY: Federal Aviation Administration (FAA), DOT.

ACTION: Notice of petitions for exemption received.

SUMMARY: Pursuant to FAA's rulemaking provisions governing the application, processing, and disposition of petitions for exemption, part 11 of Title 14, Code of Federal Regulations (14 CFR), this notice contains a summary of certain petitions seeking relief from specified requirements of 14 CFR. The purpose of this notice is to improve the public's awareness of, and participation in, this aspect of FAA's regulatory activities. Neither publication of this notice nor the inclusion or omission of information in the summary is intended to affect the legal status of any petition or its final disposition.

DATES: Comments on petitions received must identify the petition docket number involved and must be received on or before February 2, 2005.

ADDRESSES: You may submit comments identified by DOT DMS Docket Number FAA–2004–19861 or FAA–2004–19937 by any of the following methods:

- *Web Site: http://dms.dot.gov.* Follow the instructions for submitting comments on the DOT electronic docket site.
- *Fax:* 1–202–493–2251.
- *Mail:* Docket Management Facility; U.S. Department of Transportation, 400 Seventh Street, SW., Nassif Building, Room PL–401, Washington, DC 20590–0001.
- *Hand Delivery:* Room PL–401 on the plaza level of the Nassif Building, 400 Seventh Street, SW., Washington, DC, between 9 a.m. and 5 p.m., Monday through Friday, except Federal holidays.

Docket: For access to the docket to read background documents or comments received, go to *http://dms.dot.gov* at any time or to Room PL–401 on the plaza level of the Nassif Building, 400 Seventh Street, SW., Washington, DC, between 9 a.m. and 5 p.m., Monday through Friday, except Federal holidays.

FOR FURTHER INFORMATION CONTACT: Madeleine Kolb (425–227–1134), Transport Airplane Directorate (ANM–113), Federal Aviation Administration, 1601 Lind Avenue, SW., Renton, WA 98055–4056; or John Linsenmeyer (202) 267–5174), Office of Rulemaking (ARM–1), Federal Aviation Administration, 800 Independence Avenue, SW., Washington, DC 20591.

This notice is published pursuant to 14 CFR 11.85 and 11.91.

Issued in Washington, DC, on January 7, 2005.

Anthony F. Fazio,

Director, Office of Rulemaking.

Petitions for Exemption

Docket No.: FAA–2004–19861.

Petitioner: Embraer Empresa Brasileira de Aeronautica S.A.

Section of 14 CFR Affected: 14 CFR 25.901(c).

Description of Relief Sought: To permit the certification of the Embraer ERJ 190/CF34–10E (including the ERJ 190–100 and ERJ 190–200 model) airplanes without complying with the ''no single failure'' criterion of § 25.901(c) because the likelihood that an uncontrollable high thrust failure condition will occur cannot be shown to be extremely improbable.

Docket No.: FAA–2004–19937.

Petitioner: Embraer Empresa Brasileira de Aeronautica S.A.

Section of 14 CFR Affected: 14 CFR 25.841(a)(2)(ii).

Description of Relief Sought: To permit certification of the Embraer ERJ 190/CF34–10E (including the ERJ 190–100 and ERJ 190–200 model) airplanes without meeting the requirements of § 25.841(a)(2)(ii), Amendment 25–87, which specify the maximum cabin

altitude allowable after engine rotorburst.

[FR Doc. 05–751 Filed 1–12–05; 8:45 am]

BILLING CODE 4910–13–P

DEPARTMENT OF TRANSPORTATION

Federal Aviation Administration

[Summary Notice No. PE–2005–06]

Petitions for Exemption; Summary of Petitions Received

AGENCY: Federal Aviation Administration (FAA), DOT.

ACTION: Notice of petition for exemption received.

SUMMARY: Pursuant to FAA's rulemaking provisions governing the application, processing, and disposition of petitions for exemption, part 11 of Title 14, Code of Federal Regulations (14 CFR), this notice contains a summary of certain petitions seeking relief from specified requirements of 14 CFR. The purpose of this notice is to improve the public's awareness of, and participation in, this aspect of FAA's regulatory activities. Neither publication of this notice nor the inclusion or omission of information in the summary is intended to affect the legal status of any petition or its final disposition.

DATES: Comments on petitions received must identify the petition docket number involved and must be received on or before February 2, 2005.

ADDRESSES: You may submit comments identified by DOT DMS Docket Number FAA–2004–19090 by any of the following methods:

- *Web Site: http://dms.dot.gov.* Follow the instructions for submitting comments on the DOT electronic docket site.
- *Fax:* 1–202–493–2251.
- *Mail:* Docket Management Facility; U.S. Department of Transportation, 400 Seventh Street, SW., Nassif Building, Room PL–401, Washington, DC 20590–0001.
- *Hand Delivery:* Room PL–401 on the plaza level of the Nassif Building, 400 Seventh Street, SW., Washington, DC, between 9 a.m. and 5 p.m., Monday through Friday, except Federal holidays.

Docket: For access to the docket to read background documents or comments received, go to *http://dms.dot.gov* at any time or to Room PL–401 on the plaza level of the Nassif Building, 400 Seventh Street, SW., Washington, DC, between 9 a.m. and 5 p.m., Monday through Friday, except Federal holidays.

FOR FURTHER INFORMATION CONTACT: John Linsenmeyer (202) 267–5174 or Susan Lender (202) 267–8029, Office of Rulemaking (ARM–1), Federal Aviation Administration, 800 Independence Avenue, SW., Washington, DC 20591.

This notice is published pursuant to 14 CFR 11.85 and 11.91.

Issued in Washington, DC, on January 7, 2005.

Anthony F. Fazio,

Director, Office of Rulemaking.

Petition for Exemption

Docket No.: FAA–2004–19090.

Petitioner: 4/Flight Industries.

Sections of 14 CFR Affected: 14 CFR 21.325(b)(3) and 21.601(c).

Description of Relief Sought: To allow the petitioner to issue export airworthiness approvals for their product manufactured and located at their facility in Montreal, Canada. The exemption would also permit issuance of Technical Standard Order (TSO) authorizations for products manufactured at facilities located outside the United States.

[FR Doc. 05–753 Filed 1–12–05; 8:45 am]

BILLING CODE 4910–13–P

DEPARTMENT OF TRANSPORTATION

Federal Aviation Administration

Aviation Rulemaking Advisory Committee Meeting on Rotorcraft Issues

AGENCY: Federal Aviation Administration (FAA), DOT.

ACTION: Notice of public meeting.

SUMMARY: This notice announces a public meeting of the FAA's Aviation Rulemaking Advisory Committee to discuss rotorcraft issues.

DATES: The meeting will be held on February 7, 2005, 10:15 a.m. to 12:15 p.m. P.s.t.

ADDRESSES: The meeting will be held at the Anaheim Convention Center, Room 207–B, 800 West Katella Avenue, Anaheim, CA 92802, phone (714) 765–8950.

FOR FURTHER INFORMATION CONTACT: Angela Anderson, Office of Rulemaking, ARM–200, FAA, 800 Independence Avenue, SW, Washington, DC 20591, telephone (202) 267–9681.

SUPPLEMENTARY INFORMATION: The referenced meeting is announced pursuant to Section 10(a)(2) of the Federal Advisory Committee Act (Pub. L. 92–463; 5 U.S.C. App. II).

The agenda will include:

a. Discussion and approval of the Fatigue Tolerance Evaluation of Metallic Structures proposed Regulatory and Advisory Circular material package.

b. Working Group Status Report: Damage Tolerance and Fatigue Evaluation of Composite Rotorcraft Structure.

c. FAA Status Report: Performance and Handling Qualities Requirements Notice of Proposed Rulemaking.

Attendance is open to the public but will be limited to the space available. The public must make arrangements to present oral statements at the meeting. Written statements may be presented to the committee at any time by providing 16 copies to the Assistant Chair or by providing the copies at the meeting.

Approximately thirty days after the meeting, minutes will be available on the FAA Web site at *http://www.faa.gov/avr/arm/arac/calendarxml.cfm?nav=6*.

If you are in need of assistance or require a reasonable accommodation for the meeting, please contact the person listed under the heading **FOR FURTHER INFORMATION CONTACT**. In addition, sign and oral interpretation, as well as a listening device, can be made available at the meeting if requested 10 calendar days before the meeting. You may make arrangements by contacting the person listed under the heading **FOR FURTHER INFORMATION CONTACT**.

If you are unable to attend the meeting, you can access it by telephoning 817–222–4871, pass code 5359#.

Issued in Washington, DC, on January 7, 2004.

Anthony F. Fazio,

Executive Director, Aviation Rulemaking Advisory Committee.

[FR Doc. 05–658 Filed 1–12–05; 8:45 am]

BILLING CODE 4910–13–P

DEPARTMENT OF TRANSPORTATION

Federal Motor Carrier Safety Administration

[Docket No. FMCSA–2003–15015]

Policy on Availability of Information From the Commercial Driver's License Information System

AGENCY: Federal Motor Carrier Safety Administration (FMCSA), DOT.

ACTION: Notice of policy.

SUMMARY: As required by the Transportation Equity Act for the 21st Century (TEA–21), this document informs the public of FMCSA's policy regarding access to information in the Commercial Driver's License Information System (CDLIS) by other Federal agencies.

EFFECTIVE DATE: This policy is effective January 13, 2005.

FOR FURTHER INFORMATION CONTACT: Carol Gore, (202) 366–4013, Office of Safety Programs, Federal Motor Carrier Safety Administration, Department of Transportation, 400 Seventh Street, SW., Washington, DC 20590.

SUPPLEMENTARY INFORMATION: Section 12007(e) of the Commercial Motor Vehicle Safety Act (CMVSA) of 1986 (Pub. L. 99–570) specified four entities authorized to access information from CDLIS. These entities were the Secretary of Transportation, the States, an employer or prospective employer of a person who operates a commercial motor vehicle (CMV), and a person who operates a CMV for an employer that owns or leases a CMV or assigns employees to operate a CMV (49 U.S.C. § 31309(e)). This provision remained in effect until Congress passed TEA–21 (Pub. L. 105–85) and revised the access provision through sections 4004(a) and 4011(d) (5) (codified at 49 U.S.C. 31106(e) and 31309(c), respectively). Sections 4004(a) and 4011(d)(5) of TEA–21 expanded CDLIS access by requiring the Secretary of Transportation to develop a policy on making information available from CDLIS. The policy must conform to existing Federal information laws and regulations.

Privacy Act Applicability

The Privacy Act of 1974 (Pub. L. 93–579, as amended) regulates Federal information system practices regarding the collection, maintenance, dissemination and use of records by Federal executive branch agencies. CDLIS is not a Federal ''system of records,'' as defined by the Privacy Act because the records in CDLIS are not controlled by FMCSA. Federal agencies obtaining access to CDLIS records may be subject to the Privacy Act, if they establish a system of records with the information obtained from CDLIS. Such agencies may also need to provide a process for review and correction of those records.

Availability of Information From CDLIS

Section 12007(c) of the CMVSA directed the Secretary to establish an information system, now known as CDLIS, to exchange commercial driver licensing information among all the States. CDLIS includes the databases of fifty-one licensing jurisdictions and the CDLIS Central Site, all connected by a telecommunications network.

The CDL program was designed based on these fundamental principles—that no person who operates a commercial motor vehicle shall at any time have more than one driver's license, that one license shall contain that person's complete driving record, and that the licensing State shall be notified of any convictions of violations of any motor vehicle control laws in any other State. CDLIS supports these principles by providing the Central Site, the telecommunications network, and the operating protocols States need to exchange commercial license, conviction and safety information on individual CDL drivers. Drivers who wish to review and, if necessary, correct information about them in CDLIS must contact the State agency that issued their license.

FMCSA Policy on Availability of Information From CDLIS

It is FMCSA's policy that another Federal agency may request access to information in CDLIS by written submission to FMCSA's Chief Safety Officer. In the request, the applicant must state the legal basis and the need for access to CDLIS. A Federal agency will be required to execute a Memorandum of Understanding (MOU) with the Department of Transportation and/or FMCSA before access to CDLIS data will be provided.

Issued on: January 7, 2005.

Annette M. Sandberg,

Administrator.

[FR Doc. 05–669 Filed 1–12–05; 8:45 am]

BILLING CODE 4910–EX–P

DEPARTMENT OF TRANSPORTATION

Federal Railroad Administration

Notice of Safety Advisory 2005–01; Position of Switches in Non-Signaled Territory

AGENCY: Federal Railroad Administration (FRA), Department of Transportation (DOT).

ACTION: Notice of safety advisory.

SUMMARY: FRA is issuing Safety Advisory 2005–01 to advise all railroads to review their operating rules and take certain other action necessary to ensure that train crews who operate manual (hand-operated) main track switches in non-signaled territory restore the switches to their normal position after use. FRA intends this advisory to reduce the risk of serious injury or death both to railroad employees and the general public due to not restoring such switches to their normal position after use.

FOR FURTHER INFORMATION CONTACT: Douglas H. Taylor, Staff Director, Operating Practices Division, Office of Safety Assurance and Compliance, FRA, 1120 Vermont Avenue, NW., RRS–11, Mail Stop 25, Washington, DC 20590 (telephone (202) 493–6255).

SUPPLEMENTARY INFORMATION:

Factual Background

A review of FRA's accident/incident data shows that, overall, the safety of rail transportation continues to improve. However, FRA has particular concern that recent accidents on Class I railroads in non-signaled territory were caused, or apparently caused, by the failure of railroad employees to return manual (hand-operated) main track switches to their normal position, *i.e.*, lined for the main track, after use. As a result, rather than continuing their intended movement on the main track, trains approaching these switches in a facing-point direction were unexpectedly diverted from the main track onto the diverging route, and consequently derailed. Most recently:

- On January 8, 2005, a Burlington Northern and Santa Fe Railway Company (BNSF) freight train was unexpectedly diverted onto an industrial track in Bieber, California. The BNSF train struck two loaded grain cars, derailing seven locomotives and 14 cars. Two railroad employees were injured. Initial damages to equipment and track are in excess of $970,000.
- On January 6, 2005, a Norfolk Southern Railway Company (NS) freight train was apparently unexpectedly diverted from the main track onto an industrial lead in Graniteville, South Carolina. The NS train struck a standing train on the industrial lead, derailing three locomotives and 16 cars. One of the derailed cars that contained chlorine ruptured and released product. As a result, eight citizens and one railroad employee were killed, 5,400 local residents remain evacuated, and 234 people have sought medical treatment. The National Transportation Safety Board (NTSB) began its investigation immediately and will not make its findings of probable cause for some time. FRA has representatives at the site assisting in the investigation. By stating here its preliminary impression of what may have contributed to this tragic accident, FRA in no way intends to supersede the NTSB's thorough and painstaking efforts that will ultimately lead to its official findings of cause.

FRA's regulations (49 CFR part 217) require each railroad to instruct its employees on the meaning and application of its code of operating rules, and to periodically test its employees to determine their level of compliance. Railroad operating rules provide that the normal position for a main track switch is lined and locked for movement on the main track.

Another related rule provides that, where trains or engines are required to report clear of the main track, such a report must not be made until the switch and derail, if any, have been secured in the normal position. Where no signal or other system is in service that indicates, through wayside or cab signals, or both, the possibility that a main track switch may be in other than its normal position, compliance with these railroad operating rules is the critical element in ensuring route integrity for main track movements.

Failure to comply with these important operating rules is the result of various causes. Difficulties may be especially likely to arise where a train crew has exclusive authority to occupy a specific track segment until they release it for other movements, but due to inattention to duty, their train does not return to a main track switch that they may have inadvertently left lined for movement to a secondary track before going off duty. Some railroads have very recently amended their operating rules to address this issue. Two recent examples are:

• On October 1, 2004, Union Pacific Railroad Company (UP) adopted a requirement that before reporting clear of the limits of a track warrant, the crewmember releasing the track warrant must first advise the train dispatcher that main track switches have been restored to their normal position. The train dispatching system prompts the dispatcher to request this information if it has not been provided by the crew. The change was made because of a collision that occurred at Thomaston, Texas, on September 29, 2004. A Texas Mexican Railway Company (TM) crew released their main track authority, in this case a track warrant, without verifying that the north siding switch was properly lined for the main track. A southbound UP train entered the siding and collided with the unattended TM train. The change was issued by System General Order and was a change to General Code of Operating Rules, Rule 14.7, Reporting Clear of Limits.

• On October 31, 2004, BNSF adopted a requirement that the train crew report to the train dispatcher the position of the switch that the train is using to clear the main track when releasing the limits of their track warrant. The dispatching system will not allow a track warrant to be cleared until the dispatcher confirms the switch position through a job briefing with the crew. The change was not made because of any specific incident, but rather as the result of a recommendation from BNSF's Northern California Division Safety Team. The BNSF Team had some concerns on a particular subdivision involving crews forgetting to line back main track switches and asked BNSF's System Rules Department to adopt a rule change to eliminate the potential for this oversight. The Rules Department then issued this change across BNSF's system.

Recommended Actions

The recent accidents have convinced FRA that, on an industry-wide basis, railroad operating rules need to be strengthened, clarified and re-emphasized so as to ensure that all main track switches are returned to their normal position after use, irrespective of whether or not the crew releases (clears) the track warrant at that time. Furthermore, it is essential that all crewmembers communicate to each other the fact that all main track switches have been properly restored after their use. Since this is strictly an issue of ensuring that employees remember to perform a simple but crucially important duty, FRA believes that additional procedures that serve as reminders of that duty may be of great value.

Accordingly, FRA strongly urges all railroads to immediately:

1. Ensure that their operating rules contain a provision, similar to that established on BNSF and UP, as described above, that clearly requires train crews who operate manual (hand-operated) main track switches in non-signaled territory to report to the dispatcher that the main track switches have been restored to normal position, before reporting clear of the limits of main track authority, such as a track warrant.

2. Require the conductor of a train crew operating in non-signaled territory to complete and sign a Switch Position Awareness Form (Form). FRA recommends that the Form be completed in ink and contain the train symbol, date, subdivision, conductor's and engineer's names, and a listing by name and location of each main track switch operated by any member of the crew. The listing should contain the switch location and name, the time the switch was reversed, the time the switch was returned to the normal position, and the initials of the conductor and the engineer. Entries made with respect to a specific main track switch must be completed by the conductor as soon as possible after the switch is reversed and as soon as possible after the switch is returned to its normal position. The engineer's initials on the Form are intended to serve as a cross-check measure to reflect that the engineer has been advised, through a job briefing with the conductor, that the main track switch or switches have been restored to their normal position. The engineer's initials should be affixed to the Form as soon as practicable after the main track switch has been restored to its normal position. All initials required on the Form must be entered before any member of the crew reports clear of the limits of the main track authority.

3. Require that, at the completion of each trip or tour of duty, the original Form be submitted to the designated railroad official(s) as directed.

4. Require that railroad officers review the completed Forms for accuracy. The results of these reviews should be incorporated into the railroad's operational tests and inspections program as required by 49 CFR 217.9.

5. Ensure immediate dissemination of guidance on these revised rules and procedures and of the necessary Forms to all affected operating personnel.

FRA is considering the need for any additional action to address this situation, such as regulatory action or additional advisories. We are considering the form that any additional action might take, its specific content, and any necessary variations based on differing types of operations. FRA's operating practices inspectors will determine the extent to which railroads have taken action in accordance with the measures recommended in this advisory. These findings will be one important factor in determining FRA's future course of action. We are committed to taking whatever action appears necessary to prevent any further death or serious injury that might arise from additional failures to comply with the basic operating rules concerning the proper positioning of main track switches.

In the meantime, all railroads are strongly urged to immediately adopt and comply with the measures recommended in this advisory.

Issued in Washington, DC, on January 10, 2005.

Robert D. Jamison,

Acting Administrator, Federal Railroad Administration.

[FR Doc. 05–834 Filed 1–11–05; 2:37 pm]

BILLING CODE 4910–06–P

DEPARTMENT OF TRANSPORTATION

Maritime Administration

[Docket No. MARAD–2005–20070]

Information Collection Available for Public Comments and Recommendations

ACTION: Notice and request for comments.

SUMMARY: In accordance with the Paperwork Reduction Act of 1995, this notice announces the Maritime Administration's (MARAD's) intention to request extension of approval for three years of a currently approved information collection.

DATES: Comments should be submitted on or before March 14, 2005.

FOR FURTHER INFORMATION CONTACT: Rita Jackson, Maritime Administration, MAR–410, 400 Seventh Street, SW., Washington, DC 20590. Telephone: (202) 366–0284; FAX: (202) 366–7403; or e-mail: *rita.jackson@marad.dot.gov.* Copies of this collection also can be obtained from that office.

SUPPLEMENTARY INFORMATION:

Title of Collection: U.S. Merchant Marine Academy Candidate Application for Admission.

Type of Request: Extension of currently approved information collection.

OMB Control Number: 2133–0010.

Form Numbers: KP 2–65.

Expiration Date of Approval: Three years from date of approval by the Office of Management and Budget.

Summary of Collection of Information: The collection consists of Parts I, II, and III of Form KP 2–65 (U.S. Merchant Marine Academy Application for Admission). Part I of the form is completed by individuals wishing to be admitted as students to the U.S. Merchant Marine Academy.

Need and Use of the Information: The information is necessary to select the best qualified candidates for the U.S. Merchant Marine Academy.

Description of Respondents: Individuals desiring to become students at the U.S. Merchant Marine Academy.

Annual Responses: 2,500.

Annual Burden: 12,500 hours.

Comments: Comments should refer to the docket number that appears at the top of this document. Written comments may be submitted to the Docket Clerk, U.S. DOT Dockets, Room PL–401, 400 Seventh Street, SW., Washington, DC 20590. Comments also may be submitted by electronic means via the Internet at *http://dms.dot.gov/submit.* Specifically address whether this information collection is necessary for proper performance of the functions of the agency and will have practical utility, accuracy of the burden estimates, ways to minimize this burden, and ways to enhance the quality, utility, and clarity of the information to be collected. All comments received will be available for examination at the above address between 10 a.m. and 5 p.m. e.d.t. (or e.s.t.), Monday through Friday, except Federal holidays. An electronic version of this document is available on the World Wide Web at *http://dms.dot.gov.*

Privacy Act: Anyone is able to search the electronic form of all comments received into any of our dockets by the name of the individual submitting the comment (or signing the comment, if submitted on behalf of an association, business, labor union, etc.). You may review DOT's complete Privacy Act Statement in the **Federal Register** published on April 11, 2000 (Volume 65, Number 70; Pages 19477–78) or you may visit *http://dms.dot.gov.*

(Authority: 49 CFR 1.66.)

Dated: January 7, 2005.

By Order of the Maritime Administrator.

Joel C. Richard,

Secretary, Maritime Administration.

[FR Doc. 05–733 Filed 1–12–05; 8:45 am]

BILLING CODE 4910–81–P

DEPARTMENT OF TRANSPORTATION

National Highway Traffic Safety Administration

Responses to Questions Received in Response to Announcement of Availability of Discretionary Cooperative Agreements for Research Under the Crash Injury Research and Engineering Network (CIREN)

AGENCY: National Highway Traffic Safety Administration (NHTSA), DOT.

ACTION: Responses to questions received in response to the announcement of discretionary cooperative agreements to support the research conducted under the Crash Injury Research and Engineering Network (CIREN) and to increase its benefits to the public.

SUMMARY: **Federal Register**, Volume 69, No. 235, Pages 71101–71118, announced the availability of discretionary Cooperative Agreement opportunities to provide funding to Level One Trauma Centers in support of the Crash Injury Research and Engineering Network (CIREN) from the National Highway Traffic Safety Administration (NHTSA). The NHTSA indicated that responses to all questions received by December 20, 2004, would be published in the **Federal Register** and on the CIREN Web site: *http://www-nrd.nhtsa.dot.gov/departments/nrd-50/ciren/CIREN.html.* Those questions and answers are listed below:

Question: Has the total funding amount of $3 million been confirmed for FY 2005?

Answer: Yes.

Question: The announcement does not mention cost-sharing or matching funds. Can it be assumed that neither will be required for this grant?

Answer: This is a cooperative research agreement and it is assumed that there will be some ''in kind'' contributions by the Level One Trauma Center.

Question: If cost sharing is not required, would it help an application, though, if matching funds were provided?

Answer: Yes.

Question: Do you advise applicants to contact you with project ideas before submitting applications? Or only if they have general questions?

Answer: No. We are not looking for project ideas. The announcement for discretionary funding for the cooperative research agreements is very specific as to the work required. Applicants are not required to submit any project ideas.

Question: The announcement does not mention this, but does this program have a CFDA number?

Answer: Yes—it is 20–600.

Question: How competitive is this program, *i.e.*, for the last funding cycle, how many proposals were submitted and how many received funding?

Answer: This is the first time that the CIREN program has issued a Request for Proposals (RFP). During the last funding cycle, awards were made via a letter of invitation to the existing centers to continue the work they were doing. At that time, the program and database were still in the developmental phase.

Question: Is there anything else you would like applicants to know?

Answer: No. Applicants should carefully read the **Federal Register** announcement to be certain of work requirements. As indicated in the **Federal Register** announcement, ''Interested applicants are advised that no separate application package exists beyond the contents of this announcement.''

Question: For a proposed site that would like to do both pediatric and adult cases, does Level I funding require that the site track 50 pediatric and 50 adult cases OR can the cases be mixed?

Answer: The requirement is for a total of 50 cases.

Question: Is the software from Volpe (a) provided free of charge, (b) included

in the $10,000 Year 1 line item, or (c) should our agency include it as a budgeted expense?

Answer: As indicated in Section XII, Application Contents, the $10,000 represents equipment (hardware) costs and should be added to your overall budget estimate for the base year. Software (required to run the CIREN applications only) and Volpe support is provided under a separate effort.

Question: What impact does the loss of subjects to follow-up for the Quality of Life 6-month and 12-month questions have on the potential funding level adjustments (section V.2, paragraph 1)?

Answer: NHTSA is aware that obtaining follow-up in a trauma study population is a difficult task. The production of follow-up data is a priority for the CIREN Program and for NHTSA. The collection of follow-up data will be closely monitored and addressed on a case-by-case basis. If a site is unable to consistently collect follow-up data in sufficient production levels, then funding would be affected.

Question: Does the $3,000,000 total amount available for funding include F&A or is F&A calculated above this funding level?

Answer: $3,000,000 is the total amount of Federal funding currently available. All Fixed and Actual costs should be included in your overall budget estimates.

Question: Are the resumes of staff included in the 50-page limit?

Answer: No, you may include them as an appendix.

Question: Is the SF 424 and detailed budget included in the 50-page limit?

Answer: No, you may include them as an appendix.

Question: Do you want a separate application for each performance level?

Answer: No, unless you are going to approach the work in a different manner. However, We do need separate budget estimates (SF 424 forms) for each level. The **Federal Register** Announcement states that ''Separate budgets are requested for each Level of Effort for which the applicant wishes to apply.''

Question: The **Federal Register** Announcement states that ''Separate budgets are requested for each Level of Effort for which the applicant wishes to apply.'' Are entire separate applications (*e.g.* entire 50 pages with an original and 5 copies) required for each level? Or can we rather make one application, with some description of contingency plans that would be used if different Levels of Effort were awarded? This latter option would still include the separate budgets for each level, but would have only one 50-page application (with copies).

Answer: Separate applications are not required unless your work plan is different for the different performance levels. One application is fine as long as you have separate budgets for each performance level.

Question: If entire separate applications are required for each Level of Effort for which the applicant is applying, do separate sets of appendices need to be sent with each application or would one set suffice for all applications?

Answer: Separate application packages are not required. Only one set of appendices are required EXCEPT for budget/financial forms.

Question: If one application encompassing all three levels is permissible, is it mandatory? That is if we get into trouble with the page limits (especially as multiple 424 forms would need to be included within the 50 page limit), could we instead submit entirely separate 50 page applications for each of the three funding levels?

Answer: The 424 forms are not counted in the 50-page limit—put them in an appendix. A single application is not mandatory. You may submit separate 50 page applications for each of the three funding levels.

Question: In Section XII. Application Contents, Section 1. Supplemental budget information is requested in addition to SF424 (A and B). Is there a particular form to use for supplemental budget information? Is a narrative budget justification sufficient to provide the supplemental information? Could PHS 398 form be used for this?

Answer: The SF 424 forms are required. The PHS 398 form cannot be used. There are no particular additional forms. A narrative budget justification (along with the SF 424 forms) is sufficient as long as it contains the dollar value and what it relates to.

Question: Is the budget information (either Form 424 (A and B) and/or supplemental information or both the forms and supplemental information) included in the 50-page limit? Can supplemental information be placed in the appendix?

Answer: Budget information and forms are not included in the 50-page limit. They may be placed in the appendix along with any supplemental budget information.

Question: I note that a separate Form 424 (one page) and Form 424A (two pages) are to be filled out for each level requested. However, Form 424B (two pages) would not seem to vary between the different levels. It is entitled ''Assurances—Non-Construction Programs'' and just requires a signature (no information to be provided). To save space (especially if only one 50 page application is to be submitted for all three levels combine), can one copy of this form suffice for all three levels?

Answer: No. These forms are not included in the 50-page limit and can be put in the appendix. Please provide complete copies of each form for each level. This assures that each cost estimate for each level is a complete package. This also makes evaluation of the budget at the various levels easier.

Question: Is there a specific amount that we should request for the first year for each level? Or should just put together a reasonable budget that we think will get the job done?

Answer: Specific funding levels have not been established. Please put together a reasonable budget that you think will allow you to achieve the performance levels.

Question: In submitting a proposed budget year by year for all 5 years, are we allowed to vary the amount requested year by year? That is as salaries increase with inflation and raises, are we allowed to increase the amount we request each year.

Answer: Yes.

Question: Is more than one Co-Principal Investigator possible?

Answer: No.

Question: In Section XIII. CIREN System Requirements. 2. Staffing Requirements and Duties. It is stated that ''No staff member assigned to this work effort may be involved in any police, insurance or investigative activities.'' Does this apply to testifying as an expert witness for insurance companies or for any other party (*e.g.* as opposed to being employed by such insurance companies or other parties)?

Answer: Yes.

Question: If so, does this apply whether or not examination of vehicles is involved?

Answer: Yes.

Question: If so, does this apply whether or not severely damaged vehicles are involved? That is, does it make a difference if testifying for an insurance company (or other party) is restricted to examination of vehicles involved in crashes that would not qualify for CIREN inclusion criteria?

Answer: Yes, it applies irrespective of the severity of damage.

Question: In reference to Section X. Conflict of Interest—does testifying as an expert witness on automobile crashes constitute a potential conflict of interest that would need to be reported?

Answer: Yes.

Question: In reference to an Organizational Chart. Should this be included in the appendices (and thus outside of the 50 page limit) or as a part

of the main text (and thus within the 50 page limit)?

Answer: In the appendices.

Question: Is there any particular format to follow for resumes.

Answer: No.

Question: Is there any page limit for the resumes?

Answer: No.

Question: Are resumes to be included as an appendix (and thus outside of the 50 page limit) or as a part of the main text (and thus within the 50 page limit)?

Answer: As an appendix.

Question: In reference to Section XII. Application Contents; Section H: Past Performance and Financial Responsibility. (1) References.—Three references are requested. Can this be multiple persons at the same agency and who handle the same grant/contract? For example, multiple people at the CDC or NIH handle grants run by our injury center. Can we list the various contacts at each institution as separate contacts or should it be one contact for each grant/contract?

Answer: The three references should come from three different contracts/grants. Provided you satisfy that minimum requirement, you may, at your election, provide more than one contact for each contract/grant.

Question: We have been previously funded as a CIREN center. Can we list this cooperative agreement and the NHTSA staff who handle it as references?

Answer: Yes—this may serve as one reference.

Question: On the matter of three references—just to clarify: it seems that the questions on the references for the ''Applicant'' pertain to the institution that is applying for the award and not the individual Principal Investigator? (*e.g.,* it is the institution that is the ''Applicant.'')

Answer: It pertains to the Institution and not the individual. However, if there are no relevant institutional references, individual relevant references may be provided.

Question: In Section XV. Terms and Conditions of Award. It is stated that ''Prior to award, each applicant shall comply with certification requirements. * * *'' Should these certifications be included with the application? Or are they to be submitted later, in the event an award is made? If included with the application, I imagine that they are external to the 50-page limit (*e.g.,* included in the appendices)?

Answer: Include the certifications with the application as part of an appendix.

Question: Regarding the limit of 50 pages for the application—Are there any particular forms to use for this part? (other than the SF 424 for the budget?)

Answer: No—just the SF 424 forms—(SF 424, SF 424A, SF 424B).

Question: Are there any particular requirements regarding font, font size, or margins?

Answer: Yes—No font smaller than 10 point with one inch margins.

Question: Regarding the SF424, Item 13: Proposed Project and Item 15: Estimated Funding—Should these apply to the base year or to the entire 5 year project period?

Answer : You should include separate budgets for the base year and for each option year.

Question: CIREN System Requirements. 1. General Requirements. Paragraph 4 states: ''The Grantee CIREN center shall outline a plan to establish lines of communication among CIREN crash investigators and the quality control team to facilitate communication of medical technologies relating to crash research and the introduction of emerging technologies relating to occupant protection systems.'' Is this something that we are supposed to outline in the proposal itself or something that will come up afterwards?

Answer: This is something that you can do after awards are made. However, you are free to submit your plans in the proposal.

Question: Is the quality control team mentioned here the same one that currently exists in Indiana?

Answer: Yes.

Question: What are the approximate funding levels expected to be awarded for each center? Will these funding levels consider the expectation that the largest portion of budgets will be determined by fixed costs of staffing the necessary resources regardless of the volume of cases submitted?

Answer: Specific funding levels have not been established. Please put together a reasonable budget that you think will allow you to achieve the performance levels.

Question: Can occupants count toward center case volumes if they are treated at another level 1 trauma center, distinct from the CIREN site, assuming that similar quality medical data can be obtained? In particular, this might be important for cases where children and adults are treated at different hospitals.

Answer: No.—Not unless the Center treating the occupants is part of the CIREN site medical network.

Question: If a center out-performs the expected number of cases in a given year, can that center reapply in a subsequent year for a higher level of support?

Answer: At NHTSA's discretion, a center exceeding the expected number of cases in a given year may be permitted to reapply for a higher level of support in an option year.

Question: Regarding the requirement to demonstrate an understanding of the methodology used in electronic data collection systems, is this meant to be specific to the proprietary system used by CIREN or more generic expertise in data management systems?

Answer: More generic expertise in data management systems related to scientific/engineering/medical research related to motor vehicle crashes.

Question: Do the 3 letters of reference need to come from previous NHTSA-sponsored projects or any projects?

Answer: Any relevant projects.

Question: Clarify what is meant in Item XIII.1 by the requirement for a plan to establish lines of communication among the CIREN crash investigators and the quality control team? Is it expected that each CIREN site will develop this plan independent from other sites so that each site communicates separately from the others?

Answer: This is a plan that can be detailed after awards are made. However, you are free to submit your plans in the proposal.

Question: Provide further clarification on the potential scope of ''special research programs'' which sites may be asked to contribute. (Item XIII.3.E) Will these programs be within the scope of work and budget of an individual CIREN center?

Answer: Any such research projects will be within the scope of work and budget of an individual CIREN center.

Question: Provide clarification on the age limits to be used to decide who gets the Pediatric Quality of Life and who gets an SF–36 during the 6 and 12-month follow-up assessments.

Answer: Age limits on the Pediatric Quality of Life are ages 2 to 12. Thirteen years and older will get an SF 36.

Question: Please confirm the following apparent assumptions regarding inclusion criteria for adult and pediatric CIREN cases, based on review of the tables in Appendix 1:

a. Adult criteria

i. Can rear-seated adults or those that are only belted (no airbag or airbag suppressed) in the front seat qualify if they otherwise meet the injury criteria in frontal impacts?

Answer: Currently, rear-seated adult occupants in frontal collisions are not part of the CIREN inclusion criteria. However, the inclusion criteria can change with agency priorities. Adults in the front seat that are restrained with a

belt only (no airbag or airbag suppressed) may be included on a case-by-case basis with prior approval by NHTSA.

ii. Do the vehicle specifications for rollover crashes indicate that vehicles must be BOTH CY–8 AND 214 compliant or EITHER CY–8 OR 214 compliant?

Answer: Both.

iii. Do fire-involved cases include non-crash events or only crashes?

Answer: Only crashes. Non-crash fires may be included with NHTSA's permission on a case-by-case basis.

b. Pediatric criteria

i. Frontal crashes: Are booster seats included in the definition of a CRS?

Answer: Yes.

ii. Do children restrained with a seat belt or an airbag alone qualify for inclusion?

Answer: Yes.

iii. Is there interest in cases with airbag suppression?

Answer: Yes—if the case occupant is under the age of 13.

iv. *Rear crashes:* Are other forms of restraint including belts and forward-facing CRS (including boosters) allowable for inclusion?

Answer: At this time, these forms of restraints may be included on a case-by-case basis with prior approval by NHTSA.

v. *Rollover crashes:* Please clarify why qualifying vehicles must be 214 compliant.

Answer: CIREN concentrates on the evaluation of the newest, safest safety technologies.

Question: Is the Principal Investigator or Co-Principal Investigator required to be 100% on the project?

Answer: The Principal Investigator (or the Co-Principal Investigator) must be clinically active and full time at the Level One Trauma Center. NHTSA realizes that in order to be clinically active, one could not be dedicated 100% to the CIREN project. This also applies to your other staff. You should budget salaries based on the amount of time you feel should be allocated to each project the staff is working on.

To further clarify the 100% participation, the main PI (and Co-PI if full-time) must be available for all key components of the CIREN process (case reviews, presentation of papers, relevant participant interaction with NHTSA, peers, first responders, EMS, etc.) The Co-PI, if part-time, must be available for a portion of these key components.

Question: In terms of personnel, the RFP specifies that the Principal Investigator must be full-time. We are assuming since this person also must be a full-time trauma surgeon/ED MD that, by full-time, you mean that this individual would be full-time at the institution and not full-time devoted to CIREN Center efforts. Is this a correct assumption?

The RFP later goes on to say that the Crash Investigator and Study Coordinator must also be full-time. Would the same apply to these two personnel—that they are to be full-time at the institution but not necessarily full-time on their CIREN Center efforts? Or are they (and their salaries) expected to be 100% devoted to the CIREN program? We want to make sure we understand fully from a planning and budgeting standpoint.

Answer: The Principal Investigator (or the Co-Principal Investigator) must be clinically active at the Level One Trauma Center. NHTSA realizes that in order to be clinically active, one could not be dedicated 100% to the CIREN project. This also applies to your other staff. You should budget salaries based on the amount of time you feel should be allocated to each project the staff is working on.

To further clarify the 100% participation, the main PI must be available for all key components of the CIREN process (case reviews, presentation of papers, relevant participant interaction with NHTSA, peers, first responders, EMS, etc.) The Co-PI, if part-time, must be available for a portion of these key components.

Question: What do you mean by a Principal Investigator or a Co-Principal Investigator must be ''clinically active''?

Answer: They must see patients on a regular basis in the acute care clinical setting and interact with the first responders when a crash victim is brought to the facility.

Question: Why must the Principal Investigator or Co-Principal Investigator be ''clinically active''?

Answer: It is important that there be dialog about the crash circumstances between the first responders and the principal investigator or the co-principal investigator. It is a goal of CIREN to achieve not only improved crash/injury education for EMS providers and physicians but also to facilitate the interaction and communication between these two professions to utilize this information to improve triage, transport and treatment of crash victims.

Question: This is to clarify the requirements for Principal and Co-Principal, as described in the announcement in the **Federal Register**. Section IX. Eligibility Requirements, First paragraph. This states that: ''The Applicant's principal or co-principal must be a clinically active emergency room trauma physician or a clinically active emergency medical physician or a clinically active specialist with experience relating to the diagnosis and treatment of motor vehicle injuries and must be closely affiliated with a Level One Trauma Center.''

Later, the same topic is addressed: Section XIII. CIREN System Requirements. Sub-section 2. Staffing Requirements and Duties. (A) Principal Investigator. ''A full time Principal Investigator must be a clinically active emergency room trauma surgeon or a clinically active emergency medicine physician or a clinically active specialist with a minimum of five (5) years experience relating to diagnosis and treatment of motor vehicle injuries * * *'' Further information is then given on the requirements for a Co-Principal, including being a clinically active specialist or someone with biomechanical, engineering or epidemiological experience.

It seems that the two definitions are slightly different, in that Section IX indicates that the principal OR co-principal must be one of the categories of clinically active specialist. On the other hand, Section XIII indicates that the principal MUST be a clinically active specialist, with some discretion as to what the co-principal may be. Thus, to clarify, please let us know whether someone such with biomechanical, engineering or epidemiological experience may be principal if the co-principal is a clinically active specialist.

Answer: The principal investigator is full time at the facility and should be clinically active. The co-principal may be part-time and may be someone with biomechanical, engineering or epidemiological experience. The co-principal may also be clinically active. We have allowed some flexibility here—but either the principal or co-principal investigator MUST see patients on a regular basis in the acute care setting. Resumes are requested as attachments to the proposal, and it is recommended that appropriate qualifications be contained therein for staffing requirements.

Question: For new centers, what dollar amounts should be budgeted for training by Volpe regarding the use of the CIREN database, by years 1–5, all costs including travel, indirects, etc?

Answer: Classroom training costs are handled independently from work under the CIREN cooperative agreements. However, each CIREN center is responsible for all related travel expenses (transportation, hotel, meals, etc.) for the training. Places for training can be Oklahoma City, Boston

or Washington, DC. Please provide your estimate for this. Reimbursement shall not exceed the maximum allowable per diem for any area.

Travel costs for expenses incurred (based on maximum allowable government per diem) are reimbursed under this Cooperative Agreement (as part of the overall award amount). You will need to budget for 3 one-week trips to Oklahoma City for the Crash Investigator for the first year only; travel to Boston for introductory training in the first year for all staff (one week); and travel to Washington, DC and other unspecified domestic locations for public meetings for staff as you designate. You should also budget for a one-week NASS update training held on a yearly alternating basis in either Las Vegas, Nevada or Orlando, Florida.

In the first year, there will be three (3) one week trips to Oklahoma City for your crash investigator as well as (1) one 4-day trip to Las Vegas for NASS Update Training for the crash investigator. There will be a one-week introductory training class in Boston for all new staff involved in the CIREN project at your facility. We anticipate one other meeting in Washington, D.C. for staff of your choosing.

In subsequent years, there will be 1 (one) 4-day trip for your crash investigator to either Orlando, Florida or Las Vegas, Nevada, on an alternating basis. We anticipate a total of three meetings—two public meetings—one in Washington, D.C. and one elsewhere and a Grand Rounds in Boston with staff of your choosing.

Question: Are the travel costs predetermined by NHTSA? In either case what are those amounts for local and national travel?

Answer: Travel costs are not predetermined by NHTSA. Travel costs for expenses incurred (based on maximum allowable government per diem) are reimbursed under this Cooperative Agreement (as part of the overall award amount). You will need to budget for 3 one-week trips to Oklahoma City for the Crash Investigator for the first year only; travel to Boston for introductory training in the first year for all staff (one week); and travel to Washington, D.C. and other unspecified domestic locations for public meetings for staff as you designate. You should also budget for a one-week NASS update training held on a yearly alternating basis in either Las Vegas, Nevada or Orlando, Florida.

Question: What type of training is provided to new centers?

Answer: Training on the CIREN Database is provided for all staff; training on crash reconstruction/documentation is provided for the Crash Investigator.

Question: Who is anticipated to attend training? PI, Co-PI, Program Coordinator?

Answer: The training in Oklahoma City (and the yearly NASS update training) is only for the Crash Investigator. The one-week training on the CIREN Database is for all staff identified as part of your facility's CIREN team. The PI and Co-PI are expected to be attend the one-week training for at least one day.

Question: What costs should be budgeted for sending a team member to receive training to become a crash investigator?

Answer: The training involves three (3) trips (for a period of one-week each) to Oklahoma City (Air Fare, Hotel/Meals/Incidentals). Your budget estimates should reflect these trips.

Question: Section XIII. CIREN System Requirements 1. General Requirements—Discusses Quarterly Meetings and one Grand Rounds. I would like to reflect appropriate travel in the budget. Should we budget for 4 or 5 meetings (in the past the Grand Rounds replaced a Public Meeting and was associated with one of the 4 Team Meetings)?

Answer: For the first year, there will be a one-week training meeting in Boston for all staff, regardless of whether you are a new or existing center. The PI and Co-PI are expected to attend the one-week training for at least one day. All other key staff is expected to attend the entire week of training. We anticipate a ''volunteer'' meeting in May in Washington, DC and one ''mandatory attendance'' meeting also in Washington, DC. For all other years, we anticipate three meetings—two public meetings—one in DC and one elsewhere and a Grand Rounds in Boston.

Question: Is OTA coded centrally?

Answer: Yes, at this time with access to appropriate radiology images and reports.

Question: For new centers, we don't have a list of Tier 1&2 variables—will you provide this information? This has implications for data access and staffing.

Answer: Tier 1 data is information that is collected on the crash including photos of the vehicle, scene diagrams, etc. (See page 71112 of the **Federal Register** Notice). Tier 1 data includes the information that is available in the CIREN electronic cases that can be viewed on our Web site: *http://www-nrd.nhtsa.dot.gov/departments/nrd-50/ciren/CIREN.html*. Please refer to Appendix 2 for information on Tier 2 data.

Question: What level of commitment is required of personnel at each of the three levels (30 cases v. 40 cases v. 50 cases/year)?

Answer: This is the information we are asking you to supply us. See the section on Staffing in the **Federal Register** announcement.

Question: What type of program evaluation is required?

Answer: If, by program evaluation, you are referring to reporting requirements, quarterly progress and financial reports are required—as specified in the announcement. In addition, NHTSA evaluates each center on a quarterly basis to determine if production levels are being met, and funding will be adjusted if necessary, as specified in the announcement.

Question: How are cases chosen? Does case selection have to be randomized or time frame dependent? Can we bias the 30–50 cases we select to reflect a priori concerns that coincide with existing research interests such as alcohol, underage drivers, etc?

Answer: There are case selection criteria for all CIREN centers specified by NHTSA—see Appendix 1. All Centers must follow these criteria. As indicated in Appendix 1, there are a very small number of cases that can be pursued with NHTSA's approval, based on PI interest.

Question: What was the amount of the previous awards and were the prior awards budgeted as cost per case?

Answer: The amounts of previous awards were between $435,000 and $500,000. Awards were not budgeted as cost per case.

Question: What is the time frame for concluding cases? All at once or rolling?

Answer: See Appendix 3. You should complete your cases as soon as possible since payment depends on it. The SF 36 information will be on a rolling basis since follow-up information is collected at 6-month and 12-month intervals.

Question: If our budget projections are higher than the amount NHTSA is able to fund for any given Level, will we have the opportunity to make adjustments?

Answer: Yes—as long as you have a good technical proposal.

Question: A clerical position is not specifically identified in Staffing Requirements. If we can justify a part time position, can we include in the budget?

Answer: Yes.

Question: Section XII. Application Contents C. Trauma Registry Data, requests trauma registry data (for 3 years) and the number of motor vehicle crash occupants admitted to the Trauma Center, as well as the AIS for each

admitted occupant. I would like to clarify the definition for each request. My interpretation is: (1) Number of MVCs admitted to Trauma Center (not all MVCs are injured severely enough to meet Registry criteria).

Answer: NHTSA realizes that not all motor vehicle crash (MVC) victims meet the criteria for the trauma registry—that is why we want the actual number of MVCs on the trauma registry. The cases selected for inclusion in CIREN are the more severe ones.

Question: Do you want the Number of MVCs meeting Trauma Registry criteria (or do you want everyone that meets Registry criteria-gunshots etc)?

Answer: No, the **Federal Register** announcement indicates that we only want motor vehicle crashes—no motorcycles or pedestrians (since CIREN does not currently collect data on these crashes).

Question: Section XII. Application Contents C. Trauma Registry Data, requests trauma registry data (for 3 years) and the number of motor vehicle crash occupants admitted to the Trauma Center, as well as the AIS for each admitted occupant Do you want the AIS for all MVCs or just those meeting Trauma Registry criteria (AIS is not assigned for non-registry patients)?

Answer: The **Federal Register** Announcement indicates that the AIS should be provided for all cases where it is available. The request is for the maximum AIS per case. For example if your group admits 1000 MVC (car/truck) occupants in a given time frame (3 years) and the AIS scores are recorded. The following is an example of what is being requested.

Max AIS1 = 300 occupants,
Max AIS2 = 250 occupants,
Max AIS3 = 200 occupants,
Max AIS4 = 100 occupants,
Max AIS5 = 100 occupants,
Max AIS6 = 50 occupants.

If only severely injured patients are assigned to the Registry, provide those AIS scores. If you have any way of determining the AIS for patients not assigned to the registry, please provide that information also.

Question: In Section XII. Application Contents—F. Prior Work Experience, can we include our prior experience as a CIREN Center.

Answer: Yes.

Question: In Section XII. Application Contents H. Past Performance and Financial Responsibility—Can we use our past CIREN contract as a reference?

Answer: Yes. You may include the CIREN contract as one reference.

Question: The RFP states in Supplementary Information, Section V. Funding, Section XII Application Contents, Letter H. Past Performance and Financial Responsibility, #1: ''At least three (3) references who can attest to the past performance history and quality of work provided by the Applicant on previous assistance agreements and/or contracts.'' Does this mean we provide 3 contacts that someone from NHTSA will phone and discuss our performance or 3 letters written by people who can attest to our performance?

Answer: You should provide three persons or entities that we (NHTSA) can contact about your performance. Please provide contract/grant number, period of performance and contact information.

Question: On page 1 of the SF 424A Form, the first column—asks for Grant Program Function or Activities—is there an explanation as to what functions/activities should be placed here?

Answer: Complete instructions for filling out this form can be found on the following Web site: *http://www.whitehouse.gov/omb/grants/sf424a.pdf.*

Question: On Page 1 of the SF 424A Form, the second column asks for the CFD Assistance numbers—I retrieved the catalogue on line but have no clue what numbers to place in here.

Answer: It is 20–600.

Question: On Page 1 of the SF 424A Form, Section B—Budget Categories—I am assuming that the column numbering (1–4) are to coincide with the Grant Program Function/Activities noted in Section A—Is this assumption correct?

Answer: No. You need to put your actual budget amount for each of these categories in this section on the form. You may also provide your detailed budgets for each year on regular paper for further clarification.

Question: Is there a definition of Federal and Non-Federal funds?

Answer: Federal funds are those you would receive from the Federal Government. Non-Federal Funds are those you would get from other sources—including your ''in kind'' contributions.

Question: Can you explain the difference in Sections D and E, which are forecasting future budget years?

Answer: Section D is your budget for the first year. Section E is your budget for each option year. Remember—you must submit budgets for EACH performance level.

Issued on: January 7, 2005.

Michael Perel,

Acting Associate Administrator for Vehicle Safety Research.

[FR Doc. 05–654 Filed 1–12–05; 8:45 am]

BILLING CODE 4910–59–P

DEPARTMENT OF TRANSPORTATION

National Highway Traffic Safety Administration

[Docket No. NHTSA–2005–20053, Notice 1]

Morgan Motor Company Limited Receipt of Application for a Temporary Exemption From Part 581 Bumper Standard

In accordance with the procedures of 49 CFR Part 555, Morgan Motor Company Limited (''Morgan'') has applied for a Temporary Exemption from Part 581 *Bumper Standard*. The basis of the application is that compliance would cause substantial economic hardship to a manufacturer that has tried in good faith to comply with the standard.[1]

We are publishing this notice of receipt of the application in accordance with the requirements of 49 U.S.C. 30113(b)(2), and have made no judgment on the merits of the application.

I. Background

Founded in 1910, Morgan is a small privately owned vehicle manufacturer producing approximately 400 to 500 vehicles per year. The vehicles manufactured by Morgan are uniquely styled open top roadsters. In recent years, the only model exported into the United States was the Morgan Plus 8.[2]

Petitioner states that in preparing to replace the Morgan Plus 8 with a new model in the U.S., Morgan sought to use a V6 engine and a manual transmission supplied by Ford Motor Company (Ford). However, it became apparent that Ford would be unable to supply a suitable engine coupled with a manual transmission due to the change in the production plans. The planned Morgan replacement vehicle for the U.S. market could not accommodate an automatic transmission. Because no other alternatives were available, Morgan was unable to proceed with designing a replacement vehicle for the U.S. market. Thus, petitioner stopped selling vehicles in the United States in January of 2004.

After an unsuccessful attempt to manufacture a new vehicle that would replace the Morgan Plus 8, Morgan turned its attention to an existing vehicle designed specifically for the European market, the Morgan Aero 8

[1] To view the petition, please got to: *http://dms.dot.gov/search/searchFormSimple.cfm* (Docket No. NHTSA–2005–20053).

[2] *See http://www.Autosite.com/buyersguide/2004-morgan-plus-8.asp.*

(Aero 8).[3] The petition states, that after prolonged efforts to develop an air bag system and to make other changes to the vehicle, it was able to bring the Aero 8 into compliance with all the Federal motor vehicle safety standards. However, because Aero 8 was not originally intended for the U.S. market and because the petitioner was working on a different vehicle intended for the U.S. market, this latest effort required significant financial expenditures in a short period of time. Petitioner states that as a consequence, it has not been able to develop bumpers that comply with the requirements of Part 581, Bumper standard.

For additional information on the company, please go to *http://www.morgan-motor.co.uk/*.

II. Why Morgan Needs a Temporary Exemption

Petitioner indicates that it has experienced substantial economic hardship, especially in light of decreasing sales and substantial costs incurred in bringing Aero 8 into compliance with FMVSSs. Specifically, Morgan indicates it spent a total of £8,000,000 on developing Aero 8. Petitioner's financial submission shows a net loss of £1,964,872 (≈ $3,668,648) for the fiscal year 2003; a net gain of ≈ 68,082 (≈ $127,126) for the fiscal year 2002; and a net gain of £148,425 (≈$277,165) for the fiscal year 2001. This represents a cumulative net loss for a period of 3 years of £1,748,365 ($3,264,887).[4]

According to the petitioner, the cost of making the Aero 8 compliant with the bumper standard is beyond the company's current capabilities. Petitioner contends that developing and building a compliant bumper cannot be done without redesigning the entire body structure of the Aero 8. Morgan estimates the cost of developing a Part 581-compliant bumper to be approximately £3,000,000 and could involve significant structural modifications to the vehicle's chassis.

Morgan requests a three-year exemption in order to develop compliant bumpers. Petitioner anticipates the funding necessary for these compliance efforts will come from immediate sales of Aero 8 in the United States.

[3] A description of the Aero 8 vehicle is attached to the petition and can be viewed online at *http://dms.dot.gov/search/searchFormSimple.cfm* (Docket No. NHTSA–2005–20053).

[4] All dollar values are based on an exchange rate of £1 = $1.87 as of 11/23/2004.

III. Why Compliance Would Cause Substantial Economic Hardship and How Morgan Has Tried in Good Faith To Comply With the Bumper Standard

Petitioner contends that it cannot return to profitability unless it receives a temporary exemption from the bumper standard for the Aero 8. Specifically, if the exemption is granted, Morgan anticipates a net profit of £596,923 for the first year of Aero 8 being sold in the U.S. Morgan also projects that an exemption would have a similar impact in the next year. If the exemption is denied, Morgan will not be able to sell Aero 8 in the U.S. Resulting loss in sales revenue will result in a projected net loss of £2,242,527. Morgan indicates that a temporary exemption would provide U.S. Morgan dealers with a source of revenue. Without Aero 8 being available in the U.S., some dealers will find it difficult to remain in business and support existing customers. The petitioner will also be forced to cut back on existing customer support in the U.S.

According to its petition, Morgan examined a number of bumper solutions in order to bring the Aero 8 into compliance with Part 581. First, Morgan considered mounting bumpers from another Morgan vehicle onto Aero 8. However, because of Aero 8's unique shape, there were no structures that would accommodate suitable bumper mountings without interference with headlamps. Second, Morgan considered installing rubber bumpers. However, they too caused interference with lighting equipment. Finally, Morgan considered foam-based bumpers. This proved to be the only solution that did not result in interference with lighting equipment. However, it required a change to front and rear aluminum body panels and chassis at a cost of approximately £3,000,000.

As previously stated, Morgan plans to introduce a fully compliant Aero 8 in 2007.

IV. Why an Exemption Would Be in the Public Interest

Petitioner put forth several arguments in favor of a finding that the requested exemption is consistent with the public interest. Specifically:

1. Petitioner notes that Aero 8 complies with all Federal motor vehicle safety standards and therefore, the exemption would not increase the safety risks on U.S. highways.

2. Although the Aero 8 bumpers do not comply with Part 581, the cost of bumper repairs is comparable to similarly priced vehicles.

3. Petitioner argues that denial of the petition would limit consumer choices by permanently eliminating Morgan from the marketplace. As previously stated, Morgan manufacturers unique automobiles for which there is no direct competition or a substitute.

4. Morgan remarks that due to the nature of the Aero 8, it will, in all likelihood, be utilized infrequently and each car would not travel in excess of 3,000–4,000 miles annually.

5. Morgan does not anticipate selling more than a 100 vehicles annually, and therefore, the impact of the exemption is expected to be minimal.

V. How You May Comment on Morgan Application

We invite you to submit comments on the application described above. You may submit comments [identified by DOT Docket Number NHTSA–2005–20053] by any of the following methods:

- *Web Site: http://dms.dot.gov*. Follow the instructions for submitting comments on the DOT electronic docket site by clicking on ''Help and Information'' or ''Help/Info.''
- *Fax:* 1–202–493–2251.
- *Mail:* Docket Management Facility, U.S. Department of Transportation, 400 Seventh Street, SW., Nassif Building, Room PL–401, Washington, DC 20590.
- *Hand Delivery:* Room PL–401 on the plaza level of the Nassif Building, 400 Seventh Street, SW., Washington, DC, between 9 a.m. and 5 p.m., Monday through Friday, except Federal Holidays.
- *Federal eRulemaking Portal:* Go to *http://www.regulations.gov*. Follow the online instructions for submitting comments.

Instructions: All submissions must include the agency name and docket number or Regulatory Identification Number (RIN) for this rulemaking. Note that all comments received will be posted without change to *http://dms.dot.gov*, including any personal information provided.

Docket: For access to the docket in order to read background documents or comments received, go to *http://dms.dot.gov* at any time or to Room PL–401 on the plaza level of the Nassif Building, 400 Seventh Street, SW., Washington, DC, between 9 a.m. and 5 p.m., Monday through Friday, except Federal Holidays.

Privacy Act: Anyone is able to search the electronic form of all comments received into any of our dockets by the name of the individual submitting the comment (or signing the comment, if submitted on behalf of an association, business, labor union, etc.). You may review DOT's complete Privacy Act Statement in the **Federal Register** published on April 11, 2000 (Volume

65, Number 70; Pages 19477–78) or you may visit *http://dms.dot.gov*.

We shall consider all comments received before the close of business on the comment closing date indicated below. To the extent possible, we shall also consider comments filed after the closing date. We shall publish a notice of final action on the application in the **Federal Register** pursuant to the authority indicated below.

Comment closing date: February 14, 2005.

(49 U.S.C. 30113; delegations of authority at 49 CFR 1.50. and 501.8)

FOR FURTHER INFORMATION CONTACT: George Feygin in the Office of Chief Counsel, NCC–112, (Phone: 202–366–2992; Fax 202–366–3820; E-Mail: *George.Feygin@nhtsa.dot.gov)*.

Issued on: January 6, 2005.

Stephen R. Kratzke,

Associate Administrator for Rulemaking.

[FR Doc. 05–656 Filed 1–12–05; 8:45 am]

BILLING CODE 4910–59–P

DEPARTMENT OF TRANSPORTATION

Surface Transportation Board

[STB Docket No. MC–F–21009]

CUSA PCSTC, LLC d/b/a Pacific Coast Sightseeing Tours & Charters—Acquisition of Assets and Business Operations—Laidlaw Transit Services, Inc. d/b/a Roesch Lines

AGENCY: Surface Transportation Board.

ACTION: Notice tentatively approving finance transaction.

SUMMARY: CUSA PCSTC, LLC d/b/a Pacific Coast Sightseeing Tours & Charters (PCSTC), a motor passenger carrier (MC–463273), has filed an application under 49 U.S.C. 14303 to acquire control and operate certain assets of Roesch Lines (Roesch), a motor passenger carrier (MC–119843 (Sub-No. 11)) and subsidiary of Laidlaw Transit Services, Inc. (Laidlaw). The transaction was approved on an interim basis under 49 U.S.C. 14303(i), and the Board is now tentatively granting permanent approval. Persons wishing to oppose the application must follow the rules under 49 CFR 1182.5 and 1182.8. If no opposing comments are timely filed, this notice will be the final Board action.

DATES: Comments are due February 28, 2005. PCSTC may reply by March 14, 2005. If no comments are received by February 28, 2005, this notice is effective on that date.

ADDRESSES: Send an original and 10 copies of any comments referring to STB Docket No. MC–F–21009 to: Surface Transportation Board, 1925 K Street, NW., Washington, DC 20423–0001. In addition, send one copy of any comments to PCSTC's representative: Stephen Flott, Flott & Co. PC, P.O. Box 17655, Arlington, VA 22216–7655.

FOR FURTHER INFORMATION CONTACT: Eric S. Davis (202) 565–1608. [Federal Information Relay Service (FIRS) for the hearing impaired: 1–800–877–8339.]

SUPPLEMENTARY INFORMATION: PCSTC is a private limited liability company organized under the laws of the state of Delaware by CUSA, LLC (CUSA), a noncarrier, which is wholly owned by KBUS Holdings, LLC (KBUS), which is also a noncarrier. KBUS acquired control of over 30 motor passenger carriers formerly owned by Coach USA, Inc., and then consolidated those entities into the motor passenger carriers now controlled by CUSA.[1]

Since completing the transaction approved by the Board in STB Docket No. MC–F–21000, PCSTC states that CUSA has successfully reorganized the assets and businesses acquired as a result of that transaction into a number of federally and non-federally regulated companies. Annual revenues for the CUSA group of companies for 2004 are forecast to be $220 million. The companies in the CUSA group operate more than 1,000 coaches and 600 other revenue vehicles in 35 states and have more than 3,500 employees. PCSTC states that the experienced senior management team that CUSA now has in place has identified the acquisition of the properties and passenger services operated by Roesch as a way to expand its sightseeing and tour business in the Southern California market.

Roesch, an operating division of Laidlaw, specializes in sightseeing, tour and charter services in the Las Vegas, NV, and Southern California areas. According to PCSTC, Roesch has been unable to restore its sightseeing, tour and charter business to sufficiently profitable levels in the years following September 11, 2001, and is generating insufficient returns on invested capital. Under the proposed transaction, PCSTC seeks to permanently acquire certain assets of Roesch, that were acquired on an interim basis, including Roesch's vehicles, trade receivables, and business operations, as well as a variety of other assets. Once this transaction is consummated,[2] the Federal operating authority currently held by seller will be surrendered.

Under 49 U.S.C. 14303(b), the Board must approve and authorize a transaction it finds consistent with the public interest, taking into consideration at least: (1) The effect of the transaction on the adequacy of transportation to the public; (2) the total fixed charges that result; and (3) the interest of affected carrier employees.

PCSTC has submitted information, as required by 49 CFR 1182.2, including the information to demonstrate that the proposed transaction is consistent with the public interest under 49 U.S.C. 14303(b). PCSTC states that the proposed transaction will have no impact on the adequacy of transportation services available to the public, that the operations of the carrier involved will remain unchanged, that fixed charges associated with the proposed transaction will not be adversely impacted and that the interests of employees of Roesch will not be adversely impacted. Additional information, including a copy of the application, may be obtained from PCSTC's representative.

On the basis of the application, the Board finds that the proposed acquisition of assets is consistent with the public interest and should be authorized. If any opposing comments are timely filed, this finding will be deemed vacated and, unless a final decision can be made on the record as developed, a procedural schedule will be adopted to reconsider the application. *See* 49 CFR 1182.6(c). If no opposing comments are filed by the expiration of the comment period, this notice will take effect automatically and will be the final Board action.

Board decisions and notices are available on the Board's Web site at *http://www.stb.dot.gov.*

This action will not significantly affect either the quality of the human environment or the conservation of energy resources.

It is ordered:

1. The proposed finance transaction is approved and authorized, subject to the filing of opposing comments.

2. If timely opposing comments are filed, the findings made in this notice will be deemed as having been vacated.

3. This notice will be effective on February 28, 2005, unless timely opposing comments are filed.

4. A copy of this notice will be served on: (1) The U.S. Department of Transportation, Federal Motor Carrier Safety Administration, 400 7th Street, SW., Room 8214, Washington, DC 20590; (2) the U.S. Department of Justice, Antitrust Division, 10th Street &

---

[1] *See KBUS Holdings, LLC—Acquisition of Assets and Business Operations—All West Coachlines, Inc., et al.*, STB Docket No. MC–F–21000 (STB served July 23, 2003).

[2] The transaction is expected to close on or about January 9, 2005.

Pennsylvania Avenue, NW., Washington, DC 20530; and (3) the U.S. Department of Transportation, Office of the General Counsel, 400 7th Street, SW., Washington, DC 20590.

Decided: January 7, 2005.

By the Board, Chairman Nober, Vice Chairman Mulvey, and Commissioner Buttrey.

Vernon A. Williams,

Secretary.

[FR Doc. 05–695 Filed 1–12–05; 8:45 am]

BILLING CODE 4915–01–P

DEPARTMENT OF THE TREASURY

Internal Revenue Service

Open Meeting of the Taxpayer Advocacy Panel Multilingual Initiative (MLI) Issue Committee Will Be Conducted (Via Teleconference)

AGENCY: Internal Revenue Service (IRS), Treasury.

ACTION: Notice.

SUMMARY: An open meeting of the Taxpayer Advocacy Panel Multilingual Initiative (MLI) Issue Committee will be conducted (via teleconference). The Taxpayer Advocacy Panel is soliciting public comments, ideas, and suggestions on improving customer service at the Internal Revenue Service.

DATES: The meeting will be held Tuesday, February 8, 2005 from 3 p.m. to 4 p.m. e.t.

FOR FURTHER INFORMATION CONTACT: Inez E. De Jesus at 1–888–912–1227, or (954) 423–7977.

SUPPLEMENTARY INFORMATION: Notice is hereby given pursuant to section 10(a)(2) of the Federal Advisory Committee Act, 5 U.S.C. App. (1988) that an open meeting of the Taxpayer Advocacy Panel Multilingual Initiative Issue Committee will be held Tuesday, February 8, 2005 from 3 p.m. to 4 p.m. e.t. via a telephone conference call. If you would like to have the TAP consider a written statement, please call 1–888–912–1227 or (954) 423–7977, or write Inez E. De Jesus, TAP Office, 1000 South Pine Island Rd., Suite 340, Plantation, FL 33324. Due to limited conference lines, notification of intent to participate in the telephone conference call meeting must be made with Inez E. De Jesus. Ms. De Jesus can be reached at 1–888–912–1227 or (954) 423–7977, or post comments to the Web site: *http://www.improveirs.org.*

The agenda will include the following: Various IRS issues.

Dated: January 7, 2005.

Tersheia Carter,

Acting Director, Taxpayer Advocacy Panel.

[FR Doc. 05–740 Filed 1–12–05; 8:45 am]

BILLING CODE 4830–01–P

DEPARTMENT OF THE TREASURY

Internal Revenue Service

Open Meeting of the Wage & Investment Reducing Taxpayer Burden (Notices) Issue Committee of the Taxpayer Advocacy Panel

AGENCY: Internal Revenue Service (IRS), Treasury.

ACTION: Notice.

SUMMARY: An open meeting of the Wage & Investment Reducing Taxpayer Burden (Notices) Issue Committee of the Taxpayer Advocacy Panel will be conducted (via teleconference). The Taxpayer Advocacy Panel is soliciting public comments, ideas and suggestions on improving customer service at the Internal Revenue Service.

DATES: The meeting will be held Thursday, February 3, 2005 from 12 p.m. to 1 p.m. e.t.

FOR FURTHER INFORMATION CONTACT: Sallie Chavez at 1–888–912–1227, or (954) 423–7979.

SUPPLEMENTARY INFORMATION: Notice is hereby given pursuant to section 10(a)(2) of the Federal Advisory Committee Act, 5 U.S.C. App. (1988) that an open meeting of the Wage & Investment Reducing Taxpayer Burden (Notices) Issue Committee of the Taxpayer Advocacy Panel will be held Thursday, February 3, 2005, from 12 p.m. to 1 p.m. e.t. via a telephone conference call. If you would like to have the TAP consider a written statement, please call 1–888–912–1227 or (954) 423–7979, or write Sallie Chavez, TAP Office, 1000 South Pine Island Road, Suite 340, Plantation, FL 33324. Due to limited conference lines, notification of intent to participate in the telephone conference call meeting must be made with Sallie Chavez. Ms. Chavez can be reached at 1–888–912–1227 or (954) 423–7979, or post comments to the Web site: *http://www.improveirs.org.*

The agenda will include: Various IRS issues.

Dated: January 7, 2005.

Tersheia Carter,

Acting Director, Taxpayer Advocacy Panel.

[FR Doc. 05–741 Filed 1–12–05; 8:45 am]

BILLING CODE 4830–01–P

DEPARTMENT OF THE TREASURY

Internal Revenue Service

Privacy Act of 1974; Systems of Records

AGENCY: Internal Revenue Service, Treasury.

ACTION: Notice of proposed alterations to an existing Privacy Act System of Records.

SUMMARY: In accordance with the requirements of the Privacy Act of 1974, as amended, the Department of the Treasury, Internal Revenue Service (IRS), is proposing to add to the categories of individuals covered by the system and categories of records in the system of records entitled ''Treasury/IRS 34.037—IRS Audit Trail and Security Records System.'' These additions will permit the IRS to monitor system resources and enable IRS to deter, deny and detect unauthorized access to internal computer hardware and software and misuse of IRS resources to access external objects, like Web sites that feature pornography, gambling, etc. The IRS is also proposing to add a routine use to the system of records to permit disclosure to contractors.

DATES: Comments must be received no later than February 14, 2005. The alterations to the system of records will be effective February 22, 2005 unless the IRS receives comments which result in a contrary determination.

ADDRESSES: Comments should be sent to the Office of Governmental Liaison & Disclosure, Internal Revenue Service, 1111 Constitution Avenue, NW., Washington, DC 20224. Comments will be made available for public inspection and copying in the Internal Revenue Service Freedom of Information Reading Room, 1111 Constitution Avenue, NW., Room 1621, Washington, DC 20224, telephone number (202) 622–5164, (not a toll-free call).

FOR FURTHER INFORMATION CONTACT: Colleen Murphy, 5000 Ellin Road, C8–300, Lanham, MD 20706, (202) 283–4351 (not a toll-free number).

SUPPLEMENTARY INFORMATION: The Internal Revenue Service (IRS), in fulfillment of legal and regulatory obligations to protect the integrity of its computing resources and to maintain the public trust, must monitor the usage of those resources to ensure that they are proper and within the scope of the purpose for which users were granted access privileges. Review of audit trails and real time monitoring of system resources will enable IRS to deter, deny

and detect unauthorized access to internal computer hardware and software and the misuse of IRS resources to access external objects, like Web sites that feature pornography, gambling, etc.

A new routine use is also being proposed for this system of records to allow disclosure of records other than tax returns or return information to contractors when the information is necessary to perform the services of a government contract for which a contractor has been hired. Because the IRS utilizes contractor services to perform certain data processing activities, disclosure of audit trail data may be necessary under the terms of those services. If disclosure is necessary, the contractor to which disclosure is made will be subject to the same limitations applicable to IRS officers and employees under the Privacy Act. This new routine uses covers information other than tax returns and return information. Disclosure of IRS tax returns and return information may be made only as provided by 26 U.S.C. 6103(n). Treasury/IRS regulations at 26 CFR 301.6103(n)–1 provide guidance on the limited conditions of disclosure permissible under section 6103(n).

Other changes are being made to the notice to update the information provided under ''system location,'' ''safeguards,'' ''retention and disposal,'' and ''system manager and addresses.''

In addition, the Service will be following OMB Guidelines under which Government agencies have been directed to become more efficient while sustaining service to customers by using competitive sourcing.

The system notice was last published in its entirety in the **Federal Register** on December 10, 2001 at 66 FR 63818.

The altered system of records report, as required by 5 U.S.C. 552a(r) of the Privacy Act, has been submitted to the Committee on Government Reform of the House of Representatives, the Committee on Governmental Affairs of the Senate, and the Office of Management and Budget, pursuant to appendix I to OMB Circular A–130, ''Federal Agency Responsibilities for Maintaining Records About Individuals,'' dated November 30, 2000.

For reasons set forth above, IRS proposes to alter the system of records, Treasury/IRS 34.037—IRS Audit Trail and Security Records System, as follows:

TREASURY/IRS 34.037

SYSTEM NAME:

IRS Audit Trail and Security Records System—Treasury/IRS.

SYSTEM LOCATION:

Description of changes: The current text is replaced with the following: ''National Office, Area Offices, Territory Offices, Campuses, Computing Centers. (*See* IRS appendix A for addresses of IRS offices.)''

CATEGORIES OF INDIVIDUALS COVERED BY THE SYSTEM:

Description of changes: The period ''.'' at the end of sentence is replaced with the following text: ''or who have used IRS computing equipment/ resources. Information monitored includes Internet sites accessed.''

CATEGORIES OF RECORDS IN THE SYSTEM:

Description of changes: The period ''.'' at the end of sentence is replaced with the following text: ''or used IRS computing equipment/resources.''

* * * * *

ROUTINE USES OF RECORDS MAINTAINED IN THE SYSTEM, INCLUDING CATEGORIES OF USERS AND THE PURPOSES OF SUCH USES:

* * * * *

Description of changes: The period ''.'' at the end of routine use (7) is replaced with a semicolon '';'', and the following routine use is added at the end thereof:

''(8) disclose records to agency contractors who need to have access to the records in order to perform the services required by the contract. Recipients must comply with the requirements of the Privacy Act of 1974, as amended, 5 U.S.C. 552a.''

* * * * *

SAFEGUARDS:

Description of changes: Remove the current text and insert the following: ''Access controls will not be less than those described in IRM 25.10.1 Information Technology Security Policy and Guidance, and IRM 1.4.6 Managers Security Handbook.''

RETENTION AND DISPOSAL:

Description of changes: Remove the current text and insert the following: ''Records are maintained in accordance with record disposition handbooks, IRM 1.15.6, Retiring and Requesting Records and IRM 1.15.17, Records Management, Records Control Schedule for Information Technology.''

SYSTEM MANAGER(S) AND ADDRESS:

Description of changes: Remove the current text and insert the following: ''Director, Operational Assurance, Mission Assurance, Deputy Commissioner Operations Support, Internal Revenue Service, Department of the Treasury, 5000 Ellin Road, C8–300, Lanham, MD 20706.''

* * * * *

Dated: January 6, 2005.

Arnold I. Havens,

General Counsel.

[FR Doc. 05–726 Filed 1–12–05; 8:45 am]

BILLING CODE 4830–01–P

Corrections

Federal Register

Vol. 70, No. 9

Thursday, January 13, 2005

This section of the FEDERAL REGISTER contains editorial corrections of previously published Presidential, Rule, Proposed Rule, and Notice documents. These corrections are prepared by the Office of the Federal Register. Agency prepared corrections are issued as signed documents and appear in the appropriate document categories elsewhere in the issue.

SECURITIES AND EXCHANGE COMMISSION

[Release No. 34–50928; File No. SR–BSE–2004–59]

Self-Regulatory Organizations; Notice of Filing and Immediate Effectiveness of Proposed Rule Change by the Boston Stock Exchange, Inc. To Amend the Exchange's Rule Relating to its Regulatory Transaction Fee

Correction

In notice document 04–28669 beginning on page 126 in the issue of Monday, January 3, 2005, make the following correction:

On page 128, in the first column, in the 10th line from the top, ''January 24,2009'' should read ''January 24, 2005''.

[FR Doc. C4–28669 Filed 1–12–05; 8:45 am]

BILLING CODE 1505–01–D

SECURITIES AND EXCHANGE COMMISSION

[Release No. 34–50934; File No. SR–Amex–2004–108]

Self-Regulatory Organizations; American Stock Exchange LLC; Notice of Filing and Immediate Effectiveness of Proposed Rule Change Relating to Odd-Lots in Nasdaq Securities

December 27, 2004.

Correction

In notice document 05–79 beginning on page 412 in the issue of Tuesday, January 4, 2005 make the following correction:

On page 414, in the first column, in the 18th line from the top, ''January 21, 2005'' should read ''January 25, 2005.''

[FR Doc. C5–79 Filed 1–12–05; 8:45 am]

BILLING CODE 1505–01–D

Federal Register

Thursday,
January 13, 2005

Part II

Consumer Product Safety Commission

16 CFR Parts 1633 and 1634

Standard for the Flammability (Open Flame) of Mattresses and Mattress/Foundation Sets; Standard To Address Open Flame Ignition of Bedclothes; Proposed Rules

CONSUMER PRODUCT SAFETY COMMISSION

16 CFR Part 1633

Standard for the Flammability (Open Flame) of Mattresses and Mattress/Foundation Sets; Notice of Proposed Rulemaking

AGENCY: Consumer Product Safety Commission.

ACTION: Notice of proposed rulemaking.

SUMMARY: The Commission is proposing a flammability standard under the authority of the Flammable Fabrics Act that would address open flame ignition of mattresses and mattress and foundation sets (''mattresses/sets''). The Commission currently has a flammability standard that addresses ignition of mattresses by cigarettes. However, that standard does not address mattress fires ignited by open flames. The proposed standard sets performance requirements based on research conducted by the National Institute of Standards and Technology (''NIST''). Mattresses/sets that comply with the proposed requirements will generate a smaller size fire, thus reducing the possibility of flashover occurring. These improved mattresses should result in significant reductions in deaths and injuries associated with mattress fires. Due to the interaction of mattresses and bedclothes discussed herein, elsewhere in today's **Federal Register** the Commission is publishing an advance notice of proposed rulemaking to begin rulemaking on bedclothes.

DATES: Written comments in response to this document must be received by the Commission not later than March 29, 2005. Comments on elements of the proposed rule that, if issued in final form would constitute collection of information requirements under the Paperwork Reduction Act, may be filed with the Office of Management and Budget (''OMB'') and with the Commission. Comments will be received by OMB until March 14, 2005.

ADDRESSES: Comments should be filed by email to *cpsc-os@cpsc.gov*. Comments also may be filed by telefacsimile to (301)504–0127 or mailed, preferably in five copies, to the Office of the Secretary, Consumer Product Safety Commission, Washington, DC 20207–0001, or delivered to the Office of the Secretary, Consumer Product Safety Commission, Room 502, 4330 East-West Highway, Bethesda, Maryland; telephone (301) 504–7530. Comments should be captioned ''Mattress NPR.''

Comments to OMB should be directed to the Desk Officer for the Consumer Product Safety Commission, Office of Information and Regulatory Affairs, OMB, Washington, DC 20503. The Commission asks commenters to provide copies of such comments to the Commission's Office of the Secretary, with a caption or cover letter identifying the materials as comments submitted to OMB on the proposed collection of information requirements for the proposed mattress standard.

FOR FURTHER INFORMATION CONTACT: Margaret Neily, Directorate for Engineering Sciences, Consumer Product Safety Commission, Washington, DC 20207; telephone (301) 504–7530.

SUPPLEMENTARY INFORMATION:

A. Background

On October 11, 2001, the Commission issued an advance notice of proposed rulemaking (''ANPR'') concerning the open flame ignition of mattresses/bedding. 66 FR 51886. The ANPR was the result of the staff's evaluation of fire data over the course of several years and petitions filed by Whitney Davis, director of the Children's Coalition for Fire-Safe Mattresses (''CCFSM''). Although the Commission has an existing mattress flammability standard that addresses ignition by cigarettes, 16 CFR Part 1632, no current Commission standard directly addresses open flame ignition of mattresses. The most common open flame sources are lighters, candles and matches. The Commission is now issuing a notice of proposed rulemaking (''NPR'') proposing a flammability standard to address open flame ignition of mattresses.[1]

Characteristics of mattress/bedding fires. A burning mattress generally provides the biggest fuel load in a typical bedroom fire. Once the mattress ignites, the fire develops rapidly creating dangerous flashover conditions. Flashover is the point at which the entire contents of a room are ignited simultaneously by radiant heat, making conditions in the room untenable and safe exit from the room impossible. At flashover, room temperatures typically exceed 600–800 C (approximately 1100–1470 F). In these conditions, carbon monoxide rapidly increases, and oxygen is rapidly depleted. Mattress fires that lead to flashover are responsible for about two-thirds of all mattress fatalities. This accounts for nearly all of the fatalities that occur outside the room where the fire originated and about half of the fatalities that occur within the room of origin. A mattress that reduces the likelihood of reaching flashover could significantly reduce deaths and injuries associated with bedroom fires. [1&2] [2]

The size of a fire is measured by its rate of heat release. A heat release rate of approximately 1,000 kilowatts (''kW'') leads to flashover in a typical room. Tests of twin size mattresses of traditional construction (complying with the existing mattress standard in 16 CFR 1632) without bedclothes have measured peak heat release rates that exceeded 2,000 kW in less than 5 minutes. Tests of traditional king size mattresses measured nearly double that peak rate of heat release. [2]

Fire modeling and available test data show that as a room fire grows, a layer of accumulating hot gases and smoke thickens downward from the ceiling. For fires exceeding 600 kW, this layer typically descends to less than three feet from the floor. Heat release rates exceeding 500 kW are generally considered to pose a serious threat of incapacitation and of igniting nearby items. [2]

The objective of the proposed standard is to limit the size of mattress/bedding fires to below 1,000 kW for a period of time by reducing the heat release from the bed, specifically the mattress and foundation, and by reducing the likelihood that other objects in the room will become involved in the fire.

Research has shown that the mattress, foundation and bedclothes operate as a system in bedroom fires. Often the first item ignited is bedclothes, which then ignite the mattress. The gas burners used in the proposed test method are designed to represent burning bedclothes. Research has indicated that bedclothes themselves can contribute significantly to fires, even reaching heat release rates of up to 800 kW. [2&13] Because of the role of bedclothes in mattress fires, the Commission is initiating a rulemaking on bedclothes through an ANPR that is published elsewhere in today's **Federal Register**. The Commission received numerous comments on the mattress ANPR concerning the role of bedclothes and the need for a rule addressing them. These comments are discussed in section J of this document.

[1] Commissioner Thomas H. Moore issued a statement, a copy of which is available from the Commission's Office of the Secretary or from the Commission's Web site, *http://www.cpsc.gov*.

[2] Numbers in brackets refer to documents listed at the end of this notice. They are available from the Commission's Office of the Secretary (see ''Addresses'' section above) or from the Commission's Web site (*http://www.cpsc.gov/library/foia/foia.html*).

NIST research. The industry's Sleep Products Safety Council (''SPSC''), an affiliate of the International Sleep Products Association (''ISPA''), sponsored a research program at the National Institute of Standards and Technology (''NIST'') to better understand mattress/bedding fires and establish the technological basis for future performance requirements of a standard. NIST has conducted extensive research, which has become the basis for California's open flame mattress standard (Technical Bulletin or ''TB'' 603) and for the Commission's proposed standard.

The NIST research showed that a full-scale test is the most reliable method for measuring fire performance of mattresses/sets because they contain many materials in a complex construction. Because the order of materials, method of assembly, quantity of materials, and quality of construction, among other factors, can affect fire behavior, the complete product may perform differently in a fire than the individual components would. Based on its research, NIST drafted a full-scale test method for mattresses that uses a pair of gas burners to represent burning bedclothes as the ignition source. Both the Commission's proposed standard and California's TB 603, use this test method. [1&2]

Overview of the proposed standard. With certain exceptions explained in section G below, the proposed standard requires manufacturers to test specimens of each of their mattress prototypes (designs) before mattresses based on that prototype may be introduced into commerce. If a mattress and foundation are offered for sale as a set, the mattress must be tested with the corresponding foundation. The prototype specimens are tested using a pair of gas burners as the ignition source. The mattress and corresponding foundation, if any, must not exceed a 200 kW peak heat release rate at any time during the 30 minute test, and the total energy released must be less than 15 megajoules (''MJ'') for the first 10 minutes of the test. The proposed standard is discussed in greater detail in section G of this document.

B. Statutory Authority

This proceeding is conducted pursuant to Section 4 of the Flammable Fabrics Act (''FFA''), which authorizes the Commission to initiate proceedings for a flammability standard when it finds that such a standard is ''needed to protect the public against unreasonable risk of the occurrence of fire leading to death or personal injury, or significant property damage.'' 15 U.S.C. 1193(a).

Section 4 also sets forth the process by which the Commission may issue a flammability standard. As required in section 4(g), the Commission has issued an ANPR. 66 FR 51886. 15 U.S.C. 1193(g). The Commission has reviewed the comments submitted in response to the ANPR and now is issuing a notice of proposed rulemaking (''NPR'') containing the text of the proposed rule along with alternatives the Commission has considered and a preliminary regulatory analysis. 15 U.S.C. 1193(i). The Commission will consider comments provided in response to the NPR and decide whether to issue a final rule along with a final regulatory analysis. 15 U.S.C. 1193(j). The Commission cannot issue a final rule unless it makes certain findings and includes these in the regulation. The Commission must find: (1) If an applicable voluntary standard has been adopted and implemented, that compliance with the voluntary standard is not likely to adequately reduce the risk of injury, or compliance with the voluntary standard is not likely to be substantial; (2) that benefits expected from the regulation bear a reasonable relationship to its costs; and (3) that the regulation imposes the least burdensome alternative that would adequately reduce the risk of injury. 15 U.S.C. 1193(j)(2). In addition, the Commission must find that the standard (1) is needed to adequately protect the public against the risk of the occurrence of fire leading to death, injury or significant property damage, (2) is reasonable, technologically practicable, and appropriate, (3) is limited to fabrics, related materials or products which present unreasonable risks, and (4) is stated in objective terms. 15 U.S.C. 1193(b).

C. The Product

The proposed standard applies to mattresses and mattress and foundation sets (''mattresses/sets''). Mattress is defined as a resilient material, used alone or in combination with other materials, enclosed in a ticking and intended or promoted for sleeping upon. This includes adult mattresses, youth mattresses, crib mattresses (including portable crib mattresses), bunk bed mattresses, futons, flip chairs without a permanent back or arms, sleeper chairs, and water beds and air mattresses if they contain upholstery material between the ticking and the mattress core. Mattresses used in items of upholstered furniture such as convertible sofa bed mattresses are also included. Not included as mattresses are: sleeping bags, mattress pads, or other items used on top of the bed, or upholstered furniture which does not contain a mattress. However, the Commission could decide to address mattress pads or other top of the bed items in its rulemaking on bedclothes.

Under the proposed standard, the mattress must be tested with its corresponding foundation if the mattress and foundation are offered for sale as a set. A foundation is a ticking covered structure used to support a mattress.

According to ISPA, the top four producers of mattresses and foundations account for almost 60 percent of total U.S. production. In 2001, there were 639 establishments producing mattresses in the U.S. [10]

Mattresses and foundations are typically sold as sets. However, more mattresses are sold annually than foundations; some mattresses are sold as replacements for existing mattresses (without a new foundation) or are for use in platform beds or other beds that do not require a foundation. ISPA estimated that the total number of U.S. conventional mattress shipments was 21.5 million in 2002, and is estimated to be 22.1 million in 2003 and 22.8 million in 2004. These estimates do not include futons, crib mattresses, juvenile mattresses, sleep sofa inserts, or hybrid water mattresses. These ''non-conventional'' sleep surfaces are estimated to comprise about 10 percent of total annual shipments of all sleep products. The value of mattress and foundation shipments in 2002, according to ISPA, was $3.26 and $1.51 billion respectively. [10]

The expected useful life of mattresses can vary substantially, with more expensive models generally experiencing the longest useful lives. Industry sources recommend replacement of mattresses after 10 to 12 years of use, but do not specifically estimate the average life expectancy. In the 2001 mattress ANPR, the Commission estimated the expected useful life of a mattress at about 14 years. To estimate the number of mattresses in use for analysis of the proposed rule, the Commission used both a 10 year and 14 year average product life. Using CPSC's Product Population Model, the Commission estimates the number of mattresses currently in use (*i.e.*, in 2004) to be 233 million mattresses using a ten-year average product life, and 302.6 million mattresses using a fourteen-year average product life. [8&10]

According to industry sources, queen size mattresses are the most commonly used. In 2002, queen size mattresses were used by 34 percent of U.S. consumers. Twin and twin XL are used

by 31.2 percent of U.S. consumers, followed by full and full XL (21 percent), king and California king (11 percent), and all other sizes (2.6 percent). The average manufacturing price in 2002 was $152 for a mattress and $86 for a foundation. Thus, the average manufacturing price of a mattress/foundation set was about $238 in 2002. Although there are no readily available data on average retail prices for mattress/foundation sets by size, ISPA reports that sets selling under $500 represent 40.7 percent of the market. Sets selling for between $500 and $1000 represent 39.2 percent of the market. [10]

The top four manufacturers of mattresses and foundations operate about one-half of the 639 U.S. establishments producing these products. The remainder of the establishments are operated by smaller firms. According to the Statistics of U.S. Businesses Census Bureau data for 2001, there were 557 mattress firms operating these 639 establishments. According to the same data source, all but twelve mattress firms had less than 500 employees. If one considers a firm with fewer than 500 employees to be a small business, then 97.8 percent (557–12/557) of all mattress firms are small businesses. [9&10] The potential impact of the proposed standard on these small businesses is discussed in section M of this document.

D. Risk of Injury

Annual estimates of national fires and fire losses involving ignition of a mattress or bedding are based on data from the U.S. Fire Administration's National Fire Incident Reporting System (''NFIRS'') and the National Fire Protection Administration's (''NFPA'') annual survey of fire departments. The most recent national fire loss estimates indicated that mattresses and bedding were the first items to ignite in 19,400 residential fires attended by the fire service annually during 1995–1999. These fires resulted in 440 deaths, 2,230 injuries and $273.9 million in property loss each year. Of these, the staff considers an estimated 18,500 fires, 440 deaths, 2,160 injuries, and $259.5 million property loss annually to be addressable by the proposed standard. Addressable means the incidents were of a type that would be affected by the proposed standard solely based on the characteristics of the fire cause (*i.e.*, a fire that ignited a mattress or that ignited bedclothes which in turn ignited the mattress). For example, an incident that involved burning bedclothes and occurred in a laundry room would not be considered addressable. [3]

Among the addressable casualties, open flame fires accounted for about 140 deaths (32 percent) and 1,050 injuries (49 percent) annually. Smoking fires accounted for 210 deaths (48 percent) and about 640 injuries (30 percent) annually. Children younger than age 15 accounted for an estimated 120 addressable deaths (27 percent) and 500 addressable injuries (23 percent) annually. Adults age 65 and older accounted for an estimated 120 addressable deaths (27 percent) and 250 addressable injuries (12 percent) annually. [3]

E. NIST Research

Overview. NIST has conducted extensive research on mattress/bedding fires for SPSC and the Commission. SPSC sponsored several phases of research at NIST to gain an understanding of the complex fire scenario involving mattresses and to develop an effective test method to evaluate a mattress's performance when it is exposed to an open flame ignition source. The first phase of the research program, known as Flammability Assessment Methodology for Mattresses, involved four main objectives: (1) Evaluating the behavior of various combinations of bedclothes, (2) characterizing the heat impact imposed on a mattress by bedclothes, (3) developing burners to simulate burning bedclothes, and (4) testing the burners on different mattress designs to ensure their consistency. NIST's findings, published in NISTIR 6498, established the basis for an appropriate test method and the next phase of the research program. [2] [3]

Phase 2 of the NIST research focused on (1) analyzing the hazard by estimating the peak rate of heat release from a mattress with an improved design, (2) measuring a burning mattress's ability to involve nearby items in the room, and (3) assessing (in a limited way) bedclothes and their contribution to mattress fire hazards. This testing used mattresses with improved flammability properties while the flammability properties of bedclothes remained unchanged. [2] The findings from Phase 2 are detailed in NIST Technical Note 1446, Estimating Reduced Fire Risk Resulting from an Improved Mattress Flammability Standard.

Bedclothes. During phase 2, NIST conducted tests on twin and king size mattresses with corresponding size bedclothes. In some tests, the bedclothes contributed up to 400 kW to the fire. NIST had previously estimated that a heat release rate that may cause flashover for an ordinary sized room is about 1000 kW. Thus, a mattress that contributes more than 500 kW at the same time as bedclothes are contributing 400 kW could lead to flashover. NIST conducted additional tests concerning bedclothes for CPSC, which are discussed later in this section. [2]

Other objects in the same room. Part of the NIST study assessed the potential of a bed fire to ignite other objects in the same room. Other objects become involved by either direct flame impingement or by fire generated radiation. Although the location of objects in a bedroom is highly variable, their potential involvement is significantly influenced by their shape and properties relating to ease of ignition. NIST concluded from this research that further reducing the heat release rate from the bed could reduce the potential for ignition of other objects and therefore reduce their contribution to the overall heat release rate. [2]

Modeling. NIST used fire modeling to explore the effect that heat and toxic gases from bed fires can have throughout a home. Fire modeling is an analytical tool that uses mathematical calculations to predict real-world fire behavior. NIST used this modeling to corroborate test data exploring the predicted levels of heat and toxic gases for the room of origin and outside the room of origin. The modeling suggested that untenable fire conditions would occur within the room, with little difference between a small and large room, at 10 minutes and 25 MJ. [2]

Gas burners' correspondence to bedclothes. In addition to the research discussed above, NIST conducted separate studies for CPSC. One series of tests evaluated improved mattress designs and further supported the correlation between full scale mattress tests with the NIST gas burners and actual bedclothes. The study, NISTIR 7006–Flammability Test of Full-Scale Mattresses: Gas Burners Versus Burning Bedclothes, found that mattress designs showing good performance when tested with burners also exhibited significantly improved performance when tested with burning bedclothes. [2]

Interaction between mattresses and bedclothes. NIST's work for CPSC also reinforced observations from previous NIST research on the interaction between the mattress and bedclothes. NISTIR 7006. Tests on improved mattress designs with burning bedclothes as the ignition source tend to have two distinct heat release rate peaks. The first peak is predominantly

[3] NIST publications can be found at NIST's Web site, (*http://fire.nist.gov/bfrlpubs/*).

from the burning bedclothes, while the second is predominantly from the mattress and foundation. In tests of good performing mattress designs, NIST found the second peak (*i.e.*, from the mattress/foundation) to be comparable or lower than the first peak (*i.e.*, from the bedclothes) and to occur appreciably later. [2]

Mattress size. In another study conducted by NIST in 2004 for CPSC, NIST found that a twin size mattress made in a design that yields a very low peak heat release rate (less than 50 kW) tested with gas burners behaves essentially the same as a queen or king size mattress of the same design. Mattress designs that yield a moderate heat release rate peak (greater than 100 kW, but less than 200 kW) tend to behave the same for the first 30 minutes in twin size and king size. After ignition with the burners, the fire is localized (*i.e.*, its spread is limited) and is not affected by the mattress size. [2]

NIST evaluated the same mattress designs and sizes with burning bedclothes. NIST found the mattress size to have an apparent effect during these tests due to the differences in the size and fuel load of bedclothes. In tests of ''well performing'' mattress designs with burning bedclothes, the early heat release rate peak when testing a king size mattress was triple that when testing a twin size mattress. This was driven by the burning bedclothes. Mattress designs that showed a moderate heat release rate peak when tested with gas burners resulted in more serious fires when tested with burning bedclothes, especially in king size mattresses. [2]

F. Existing Open Flame Standards

In the mattress ANPR the staff reviewed 13 existing tests or standards relevant to open flame hazards associated with mattresses/bedding. These included Technical Bulletin (''TB'') 129, TB 121, and TB 117 from California, the Michigan Roll-up Test, and Boston Fire Department (''BFD'') 1X–11, as well as standards from ASTM International (formerly the American Society for Testing and Materials) (ASTM E–1474 and ASTM E–1590), Underwriters Laboratories (UL 1895 and UL 2060), the National Fire Protection Association (NFPA 264A and NFPA 267) and the United Kingdom (British Standard (''BS'') 6807 and BS 5852). 66 FR 51886.

As directed by California Assembly Bill 603, California's Bureau of Home Furnishings and Thermal Insulation (''CBHF'') adopted Technical Bulletin 603 (''TB 603''), an open flame fire standard for mattresses and mattress/box spring sets and futons. TB 603 is expected to go into effect January 1, 2005 and applies to items manufactured for sale in California. The California standard incorporates the same test methodology as the Commission's proposed standard. Both are based on testing and research conducted at NIST. Both TB 603 and the Commission's proposed standard require that mattresses not exceed a 200 kW peak heat release rate during the 30 minute test. However, the Commission's proposed standard requires that mattresses not exceed a total heat release of 15 MJ in the first ten minutes of the test, while TB 603 sets test criteria of 25 MJ in the first 10 minutes of the test.

The Commission believes that the research NIST has conducted, discussed above, establishes the most appropriate basis for an open flame mattress standard. Several comments on the ANPR also expressed this view (see section J of this document).

G. The Proposed Standard

1. General

The proposed standard sets forth performance requirements that each mattress/set must meet before being introduced into commerce. The test method is a full scale test based on the NIST research discussed above. The mattress specimen (a mattress or mattress and foundation set, usually in a twin size) is exposed to a pair of T shaped propane burners and allowed to burn freely for a period of 30 minutes. The burners were designed to represent burning bedclothes. Measurements are taken of the heat release rate from the specimen and energy generated from the fire. The proposed standard establishes two test criteria, both of which the mattress/set must meet in order to comply with the standard: (1) The peak rate of heat release for the mattress/foundation set must not exceed 200 kW at any time during the 30 minute test; and (2) The total heat release must not exceed 15 MJ for the first 10 minutes of the test.

2. Scope

The proposed standard applies to mattresses and mattress and foundation combinations sold as sets. Mattress is defined, as it is in the existing mattress standard at 16 CFR 1632, as ''a resilient material or combination of materials enclosed by a ticking (used alone or in combination with other products) intended or promoted for sleeping upon.'' The proposed standard lists several types of mattresses that are included in this definition (*e.g.*, futons, crib mattresses, youth mattresses). It also refers to a glossary of terms where these items are further defined.

Specifically excluded from the definition of mattress are mattress pads, pillows and other top of the mattress items, upholstered furniture which does not contain a mattress, and juvenile or other product pads. Mattress pads and other top of the bed items may be addressed in the Commission's rulemaking on bedclothes.

Like the Commission's existing mattress standard, the proposed standard allows an exemption for one-of-a-kind mattresses and foundations if they are manufactured to fulfill a physician's written prescription or manufactured in accordance with comparable medical therapeutic specifications.

3. Test Method

The proposed standard uses the full scale test method developed by NIST in the course of its research. Based on the NIST work, the Commission believes that a full scale test is necessary because of the complexities of mattress construction. Testing individual components will not necessarily reveal the likely fire performance of the complete mattress.

Under the proposed standard, the specimen (a mattress and corresponding foundation if they are to be offered for sale together as a set) is exposed to a pair of T-shaped gas burners. The specimen is to be no smaller than twin size, unless the largest size mattress or set produced of that type is smaller than twin size, in which case the largest size must be tested.

The burners impose a specified local heat flux simultaneously to the top and side of the mattress/set for a specified period of time (70 seconds for the top burner and 50 seconds for the side burner). The burners were designed to represent the local heat flux imposed on a mattress by burning bedclothes. The heat flux and burner duration were derived from data obtained from burning a wide range of bedding items. As discussed above, NIST test results using the burners have been shown to correlate with results obtained with bedclothes.

The proposed standard allows the test to be conducted either in an open calorimeter or test room configuration. Tests have shown that either configuration is acceptable. Although room effects (*i.e.*, the size and characteristics of the room) can be a factor in mattress flammability performance, test data show that room effects do not become an issue until a fire reaches about 300 to 400 kW.

Because the proposed standard limits the peak rate of heat release to 200 kW, room effects should not be an issue in the test. Preliminary analysis of data from the inter-laboratory study (discussed in section I) does not suggest any significant differences between tests based on either test configuration. The NIST test method allowed a third test configuration, essentially a smaller test room than described in the proposed standard. However, in addition to safety concerns, using the burners in the smaller size room is awkward. Only one laboratory in the country uses this configuration. Therefore, the Commission decided to propose only the two configurations.

4. Test Criteria

The proposed standard establishes two test criteria that the specimen must meet to pass the test. The peak rate of heat release must not exceed 200 kW at any time during the 30 minute test, and the total heat release must not exceed 15 MJ during the first 10 minutes of the test. [2&8]

Setting the peak rate of heat release limit at 200 kW (during the 30 minute test) ensures a less flammable mattress, reducing the contribution from the mattress, while taking into account that bedclothes and other room contents are likely to contribute to the fire. Numerous technologically feasible mattress designs are available that can meet the 200 kW criterion. Limiting the peak rate of heat release represents a significant improvement in performance compared to the 16 CFR part 1632 cigarette ignition standard for mattresses and will have the most impact on available escape time. A peak rate of heat release lower than 200 kW could limit the mattress design approaches that would meet the standard, thus increasing costs. [2&8] We note that California's TB 603 also prescribes a 200 kW peak rate of heat release.

The proposed standard requires that the total heat release in the first 10 minutes of the test must not exceed 15 MJ. This early limit ensures that the mattress will have little involvement in the fire initially and provides a substantial increase in escape time by slowing the rate of fire growth and severity. The mattress's initial performance is important because if the mattress becomes significantly involved in the early stages of the fire, this will greatly limit the time a person has to escape. [2]

The proposed 15 MJ limit in the first 10 minutes takes into account that bedclothes, and possibly other items, will be burning during this initial period and will contribute significantly to the fire. The Commission believes that the types of ticking (i.e, the outermost fabric or material that covers the mattress) currently used on mattresses can continue to be used with the 15 MJ/10 minute criteria. [2] This will allow manufacturers considerable flexibility in their mattress designs because they should be able to change tickings without affecting the mattresses performance under the test method, except in the unusual case where the ticking itself is part of the fire resistance design.

California's TB 603 prescribes a 25 MJ limit in the first 10 minutes of the test. However, NIST research, supported by fire modeling, has shown that untenable fire conditions can occur in a room from a fire producing 25 MJ in the first 10 minutes of a test. This represents the total contribution from all possibly involved items. That is, a fire that reaches a size of 25 MJ within 10 minutes could limit a person's ability to escape the room. According to the mattress industry and available test data, there are numerous technologically feasible approaches to mattress designs for meeting the proposed 15 MJ /first 10 minute limit. [2]

The 30 minute test duration is related to, but not equivalent to, the estimated time required to permit discovery of the fire and allow escape under typical fire scenarios. A mattress complying with the proposed criteria under the 30 minute test is estimated to provide an adequate time for discovery of and escape from the fire under certain conditions or assuming the bedclothes do not contribute to the extent of posing a hazardous condition early in the fire. Compared to current scenarios, this is a substantial increase in estimated escape time. The effectiveness of the estimated escape time is based on timely escape from the potentially hazardous conditions. [2&3]

Multiple test results indicate that a large number of mattress designs (using a range of fire retardant barrier technologies) can perform well in tests with gas burners for 30 minutes. Many of the tested designs are able to meet the proposed test criteria for 30 minutes, but perform erratically after 30 minutes. The number of failures, test variability, and performance unreliability increases after 30 minutes. A substantial range of technologically feasible and viable solutions and design choices exist that meet the proposed test criteria for 30 minutes. [2] We note that California's TB 603 also includes a 30 minute test duration.

The Commission considered proposing a 60 minute test duration. However, as discussed above, after 30 minutes, test variability increases, costs increase, and substantially fewer technologically feasible design approaches are available to meet the test. Most importantly, it is unclear from available data that much additional benefit would accrue with a 60 minute test.

5. Prototype Testing

The proposed standard requires, with certain exceptions, that mattress manufacturers must test specimens representative of their mattress/set prototype (design) before introducing a mattress/set into commerce. Mattresses then produced based on the prototype mattress must be identical in all material aspects of their components, materials, and method of construction to the prototype. The term ''manufacturer'' is defined as ''an individual plant or factory at which mattresses and/or mattress and foundation sets are manufactured or assembled.'' The definition includes importers. As in the existing mattress standard (16 CFR part 1632), this definition refers to the establishment where the mattress is produced or assembled, not the company. Thus, the plant or factory producing or assembling the mattress/set is required to conduct prototype testing. This is also true for importers. However, there are three exceptions to this requirement.

A manufacturer is allowed to sell a mattress/set based on a prototype that has not been tested if the prototype differs from a qualified prototype (one that has been tested and meets the criteria) only with respect to: (1) The mattress/foundation size (e.g twin, queen, king etc.); (2) the ticking, unless the qualified ticking has characteristics that are designed to improve the mattress's test performance; and/or (3) any other component, material or method of construction, provided that the manufacturer can show, on an objectively reasonable basis, that such change will not cause the prototype to exceed the specified test criteria. The third numbered option allows a manufacturer to construct and test a ''worst case'' prototype and rely on it to cover a range of related designs without having to perform additional testing. If a manufacturer chooses to take this approach, he/she must maintain records documenting that the change(s) will not cause the prototype to exceed the test criteria (*see* § 1633.11(b)(4) of the proposed rule).

When conducting prototype testing, the manufacturer must test a minimum of three specimens of the prototype in accordance with the test method

described, and all of the mattresses/sets must meet both of the test criteria discussed above. If any one prototype specimen that the manufacturer tests fails the specified criteria, the prototype is not qualified (even if the manufacturer chooses to test more than three specimens).

The Commission believes that three specimens is the appropriate minimum number for testing. Numerous research studies have typically used replicates of three for tests using the developed gas burners. This is also the number industry has generally used as it has researched and developed options for meeting the requirements of California's TB 603. Preliminary analysis of the inter-laboratory study also indicates that three replicates are appropriate to accurately characterize mattress performance. [2] Moreover, because small changes in mattresses' construction or components can affect their flammability, testing more than one mattress will provide a better indication of their performance. [1]

6. Pooling

The proposed standard allows for one or more manufacturers to rely on a given prototype. Under this approach, one manufacturer would conduct (or cause to be conducted) the full prototype testing required (testing three prototype specimens), obtaining passing results, and the other manufacturer(s) may then produce mattresses/sets represented by that prototype so long as they conduct one confirming test on a specimen they produce. If the mattress/set fails the confirming test, the manufacturer must take corrective measures, and then perform a new confirmation test that must meet the test criteria. If a confirmation test specimen fails to meet the test criteria, the manufacturer of that specimen must also notify the manufacturer of the pooled prototype about the test failure. Pooling may be used by two or more plants within the same firm or by two or more independent firms. As discussed in the initial regulatory flexibility analysis, pooling should reduce testing costs for smaller companies. Once they have conducted a successful confirmation test, pooling firms can produce mattresses based on a pooled prototype and may continue to do as long as any changes to the mattresses based on the pooled prototype are limited to the three discussed above: (1) Size of the mattress/foundation; (2) the ticking, unless the qualified ticking has characteristics that are designed to improve the mattress's test performance, and/or (3) any component, material or method of construction that the manufacturer can show (on an objectively reasonable basis) will not cause the prototype to exceed the specified test criteria.

7. Quality Assurance Requirements

Research and testing indicates that small variations in construction of a mattress/set (*e.g.* missed stitching around the side of the mattress) can affect the fire performance of a mattress. Therefore, the proposed standard contains strict requirements for quality assurance. Each manufacturer must implement a quality assurance program to ensure that the mattresses/sets it produces are identical in all material respects to the prototype on which they are based. This means that at a minimum, manufacturers must: (1) Have controls in place on components and materials to ensure that they are identical to those used in the prototype; (2) designate a production lot that is represented by the prototype; and (3) inspect mattresses/sets produced for sale. The Commission is not requiring manufacturers to conduct testing of production mattresses. However, the Commission recognizes the value of such testing as part of a quality assurance program. Therefore, the Commission encourages manufacturers to conduct random testing of mattresses/sets that are produced for sale.

8. Recordkeeping

The proposed standard requires manufacturers to maintain certain records to document compliance with the standard. This includes records concerning prototype testing, pooling and confirmation testing, and quality assurance procedures and any associated testing. The required records must be maintained for as long as mattresses/sets based on the prototype are in production and must be retained for three years thereafter.

The purpose of these recordkeeping requirements is to enable manufacturers to keep track of materials, construction methods and testing. Thus, if a manufacturer produced a mattress/set that failed to meet the test criteria, he/she should be able to use the records to determine the prototype on which the failing mattress was based, as well as the components and method of construction that were used. This information would help the manufacturer correct the problem that caused the mattress to fail the test criteria.

9. Other Requirements: Labeling, One of a Kind Exemption, and Policy on Renovation of Mattresses

Under the proposed standard, each mattress/set must bear a permanent label stating the name and location of the manufacturer, the month and year of manufacture, the model identification, prototype identification number, and a certification that the mattress complies with the standard. By placing the certification on the mattress, the manufacturer is attesting that the specific mattress would comply with the test criteria if tested.

The proposed standard allows an exemption for a one-of-a-kind mattress/set if it is manufactured in response to a physician's written prescription or manufactured in accordance with comparable medical therapeutic specifications.

Subpart C of the proposed standard restates the policy clarification on renovation of mattresses that is in Subpart C of the existing mattress standard (16 CFR Part 1632). The policy statement informs the public that mattresses renovated for sale are considered by the Commission to be newly manufactured for purposes of the requirements of the proposed standard.

H. Effectiveness Evaluation

To determine the potential effectiveness of the proposed standard, CPSC staff conducted an effectiveness evaluation, focusing primarily on reduction of deaths and injuries. The staff's analysis is explained in detail in the memorandum ''Residential Fires Involving Mattresses and Bedding.'' [3] The evaluation was based primarily on review of CPSC investigation reports that provided details of the occupants' situations and actions during the fire. Staff reviewers identified criteria that affected the occupants' ability to escape the fires they had experienced. The staff used these criteria to estimate percentage reductions in deaths and injuries expected to occur under the much less severe fire conditions anticipated with improved designs of mattresses that would comply with the proposed standard. The staff then applied these estimated reductions to national estimates of mattress/bedding fire deaths and injuries to estimate numbers of deaths and injuries that could be prevented with the proposed standard. [3]

As stated in section D of this document, the most recent national fire loss estimates indicated that mattresses and bedding were the first items to ignite in 19,400 residential fires attended by the fire service annually

during 1995—1999. These fires resulted in 440 deaths, 2,230 injuries and $273.9 million in property loss each year. Of these, the staff considers an estimated 18,500 fires, 440 deaths, 2,160 injuries, and $259.5 million property loss annually to be addressable by the proposed standard (*i.e.*, of the type that the proposed standard could affect based on the characteristics of the fire). [3]

Overall, CPSC staff estimates that the proposed standard may be expected to prevent 80 to 86 percent of the deaths and 86 to 92 percent of the injuries presently occurring in addressable mattress/bedding fires attended by the fire service. Applying these percentage reductions to 1998–2002 estimates of addressable mattress/bedding fire losses, staff estimates potential reductions of 310 to 330 deaths and 1,660 to 1,780 injuries annually in fires attended by the fire service when all existing mattresses have been replaced with mattresses meeting the new standard. There may also be reductions in property damage resulting from the proposed standard, but data are not sufficient for the staff to quantify this impact. [3]

I. Inter-Laboratory Study

An inter-laboratory study was conducted with the support of the SPSC, NIST, and participating laboratories to explore the sensitivity, repeatability, and reproducibility of the NIST test method. All of the participating labs conducted multiple tests of eight different mattress designs. The mattress designs varied critical elements (*e.g.*, the barrier—sheet or high-loft, the type of mattress—single or double-sided) and the style of mattress (*e.g.*, tight or pillow top). [2]

Preliminary analysis of the data does not suggest either unreasonable sensitivities (*i.e.*, significantly different test results when minor variations in test procedure are made) or practical limitations in the test protocol. The preliminary analysis suggests that some mattress designs perform more consistently than others. The type of barrier appears to have a significant impact on the performance and repeatability of performance of all mattress designs tested. However, the uniformity of other components and the manufacturing process can also affect the variability in fire performance. [2]

The inter-lab tests also appear to confirm earlier observations that mattresses constructed with currently available barrier technologies are able to limit the fire severity for a substantial but not indefinite time. Most of the tested mattress designs could meet the proposed requirements if the test ended at 30 minutes, but appeared to perform erratically after 30 minutes. [2]

The preliminary analysis, supported by earlier data, suggests that significant variability exists among currently available mattress designs. Although products appear to be moving toward consistency, manufacturers clearly need to control components, materials, and methods of construction. Thus, quality assurance measures, as required in the proposed rule, are important. [2]

The inter-lab study was only recently completed, and the discussion above is based on the staff's preliminary analysis of the results. A final report on the inter-lab study is expected by the end of 2004 and will be available to the public.

J. Response to Comments On the ANPR

On October 11, 2001, the Commission published an ANPR in the **Federal Register**. 66 FR 51886. During the comment period, the Commission received sixteen written comments from businesses, associations and interested parties representing various segments of the mattress and bedding industries. After the close of the comment period, the Commission received a number of additional comments, including one from the California Bureau of Home Furnishings and Thermal Insulation urging the Commission to adopt California's TB 603 as a federal standard. Significant issues raised by all of these comments are discussed below. [14&15]

Mattress Comments

1. *Comment.* Commenters agree that the hazards associated with mattress fires appear to be clearly identified. All of the commenters support the need for an open flame standard for mattresses and initiation of federal rulemaking.

Response. CPSC agrees that mattress and bedding fires continue to be one of the major contributors to residential fire deaths and civilian injuries among products within CPSC's jurisdiction. The most recent national fire loss estimates indicate that mattresses and bedding were the first items to ignite in 19,400 residential fires attended by the fire service annually during 1995—1999. These fires resulted in an estimated 440 deaths, 2,230 injuries, and $273.9 million property loss annually. In these fires, the bedclothes are most frequently ignited by a small open flame source. The burning bedding then creates a large open-flame source igniting the mattress and creating dangerous flashover conditions, the point when the entire room and its contents are ignited simultaneously by radiant heat.

The proposed standard is designed to address the identified hazard of flashover resulting from open flame ignition of mattresses, usually from burning bedclothes. Under the proposed standard, mattresses and mattress/sets are exposed to gas burners, simulating burning bedclothes. Mattresses are required to meet two performance criteria that minimize the possibility of or delay flashover for a period of time. Mattresses must not exceed 200 kW peak heat release rate during the 30 minute test, and the total heat released must be less than 15 MJ for the first 10 minutes of the test.

2. *Comment.* Most commenters endorsed the direction of the mattress flammability test development research underway at NIST and encouraged the CPSC to issue a technologically practicable, reasonable standard. More recent commenters suggest California TB 603 be adopted as the federal standard.

Response. CPSC agrees with the technical approach suggested by the NIST research. A majority of the commenters agreed that preventing flashover from mattress fires would appropriately address the risk and that a full scale test with an ignition source comparable to burning bedclothes could achieve that objective. They strongly supported the NIST approach and discouraged the adoption of any existing standards.

Before California's adoption of TB 603, one commenter suggested using a modification of the small-scale British test, BS 5852, for smoldering and flaming ignition of upholstered furniture seating composites. However, a full-scale rather than small-scale test is generally considered the most reliable method for measuring performance of a product that contains many materials in a complex construction, such as a mattress. NIST research confirmed that a full-scale test of the mattress was needed to measure its performance when exposed to burning bedclothes or the representative set of gas burners. NIST's comprehensive, scientifically based research program was designed to address the open-flame ignition of mattresses and bedclothes under controlled conditions closely resembling those of real-life fire scenarios. The program focused on understanding the dynamics of fires involving mattress and bedclothing assemblies and on developing an appropriate and technologically practicable methodology to effectively measure the hazard.

NIST subsequently prepared a test method which the state of California incorporated into their TB 603,

''Requirements and Test Procedure for Resistance of a Mattress/Box Spring Set to a Large Open-Flame'' in 2004. The proposed standard is also based on the test method developed by NIST. Research on mattress and bedclothes fires conducted by NIST for CPSC and the industry provides the basis for the test criteria specified in the proposed standard. Manufacturers and suppliers have demonstrated that mattress designs complying with these performance criteria and suitable for the residential market can be produced.

3. *Comment.* One commenter requested the exclusion of certain product categories, such as mattresses used for therapeutic reasons and in healthcare environments, from an open flame standard.

Response. The proposed standard includes all mattresses, including those used in or as part of upholstered furniture items. ''One-of-a-kind'' mattresses and foundations are defined as physician prescribed mattresses to be used in connection with the treatment or management of a named individual's physical illness or injury. These products may be exempted from testing under the proposed standard in accordance with the rules established by the Commission. The proposed standard requires them to be permanently labeled with a warning statement indicating that the mattress and foundation have not been tested under the standard and may be subject to a large fire if exposed to an open flame.

4. *Comment.* In October 2003 the California Bureau of Home Furnishings (CBHF) urged the Commission to adopt their new standard, TB 603. Subsequently, a number of commenters expressed written support for adopting the TB 603 test methodology and performance criteria.

CBHF claimed that harmonization of California and federal standards would avoid a number of potential problems. They noted potential problems such as possible federal preemption and negative impacts on interstate commerce. Since TB 603 is a newly developed methodology, CBHF suggested that an inter-laboratory study be conducted before a potential adoption of TB 603 by CPSC. They noted that data obtained from an inter-laboratory study would verify the credibility of the test method.

Response. An inter-laboratory study was conducted with the support of SPSC, NIST, CBHF, and other participating laboratories to collect additional data and confirm the test protocol developed by NIST. A number of laboratories participated in the study to evaluate sensitivity, repeatability, and reproducibility of the test protocol. While the final report is not yet available, preliminary analysis of the data does not suggest either unreasonable sensitivities or practical limitations in the test protocol.

The Commission's proposed standard is similar to California's TB 603. The proposed standard and TB 603 use the same test method and limit the peak rate of heat release of a mattress or mattress/foundation to 200 kW. TB 603 also limits the size of the fire produced in the first 10 minutes of the test to 25 MJ. According to NIST research, untenable fire conditions could occur in a room from a fire of this size. Unlike TB 603, the staff's draft proposed standard requires that the mattress contribute no more than 15 MJ to the early fire scenario. This ensures that the mattress will have little involvement in the fire for the specified period of time. This lower limit partially compensates for the contribution of an uncertain combination of burning bedclothes on the bed, helping to preserve tenable conditions for egress.

5. *Comment.* Two commenters recognize the sophistication and complexity of the test method used in California TB 603 and potentially in a federal standard. They suggest that CPSC explore laboratory accreditation programs to insure test labs are properly qualified to conduct this complex test.

Response. The interlaboratory study may identify laboratory practices, equipment, and other related factors that must be controlled to ensure consistent and accurate test results. The report and findings of the study will be available to the public; and appropriate guidance can be provided to interested laboratories. While accrediting test laboratories is not a CPSC function, the Commission supports industry and commercial laboratory development of such a program.

6. *Comment.* A commenter expressed concerns about environmental impact and consumer sensitivity to flame retardants that may be used in mattresses, whether topically applied or integrated into fibers. The commenter recommends requiring a label that discloses the use of flame retardants in the mattress and provides a source of more specific information.

Response. Mattress fire performance can be improved by incorporating fire retardant chemicals into component materials or by using materials that are inherently fire resistant. Flame retardant chemicals are already widely used in other applications. More than one billion pounds of different flame retardant chemicals are currently used annually in the United States, including applications in many consumer products. There are also flame resistant (FR) materials that may be used for mattress barriers that have other consumer product applications. For example, melamine resins, which can be used in FR barriers, are also used in many laminated counter tops.

Based on available data, the Commission believes that there are available options for meeting the standard without posing an unacceptable health risk to consumers or significantly affecting the environment. Moreover, as described in section N of this preamble, even if a method used by some manufacturers to meet the standard were suspected of posing an unacceptable risk, there would be regulatory and other mechanisms that can be used to control that particular method. The staff is planning to conduct migration and exposure studies on various FR chemicals that could be used to meet the standard.

The commenter suggested labeling of chemically treated components as a possible requirement of the standard, to inform consumers of the materials used. The Commission questions whether such information would be of practical value to consumers. Simply stating that a mattress component has been chemically treated does not indicate to the consumer whether the mattress poses any health risk or not. The proposed standard requires manufacturers to maintain records specifying details of all materials, including flame retardant treatments applied and inherently flame resistant materials, used in each mattress design (prototype). This will allow identification of relevant mattresses and mattress/sets if an unacceptable risk is identified.

7. *Comment.* Another commenter recommended test provisions in the standard that address the long term durability of the flame retardant chemicals used in mattresses to ensure they continue to meet the fire performance requirements.

Response. It is expected that most manufacturers will use some kind of flame resistant barrier material to protect the mattress components with the greatest combustible fuel load from exposure to an open flame. Flame resistant barriers for mattresses may take several forms, including ticking fabrics, woven and non-woven interlinings, and battings. It is likely that these barriers will be made with an inherently flame resistant fiber (*e.g.*, para-aramid or fiberglass) or by treatment with flame retardant chemicals, many of which are incorporated within the fiber, foam, or

other material. At this point in the development of technologies that may be used to meet TB 603 or the proposed standard, the staff has seen no evidence that suggests that changes in these materials over time will occur or affect fire performance.

8. *Comment.* One commenter expressed concerns about the potentially severe economic impact of a federal regulation, similar to TB 603, on small businesses.

Response. The Commission acknowledges that the cost of testing, record keeping, and quality control/quality assurance programs could be disproportionately higher for small businesses. While these costs are estimated to be a little over one dollar per mattress per year for average-sized establishments, they could be substantially higher for some small mattress producers. The proposed standard, however, allows manufacturers to pool their prototype qualification and testing, and thus these costs can be mitigated. Moreover, if manufacturers produce mattress/set constructions for longer than a year or use a worst-case prototype to represent other mattress constructions, these costs will be lower. It is also expected that some barrier suppliers or independent laboratories would be willing to do the testing and quality control/assurance programs for small producers in exchange for a small charge. Therefore, the proposed standard is expected to minimize the impact on small businesses, while maintaining the benefits resulting from the standard.

The Commission is requesting comments from small businesses on the expected economic impact of the requirements of the proposed standard and the proposed effective date of 12 months after publication of the final rule in the **Federal Register**.

9. *Comment.* One commenter reported that some juvenile or crib mattresses, while meeting the 200 kW peak rate of heat release requirement, produce large amounts of flaming droplets that have the potential for spreading flames beyond the mattress. TB 603 does not address these flaming droplets.

Response. The objective of the proposed standard is to reduce the size of mattress/bedding fires and, thereby reduce the likelihood of or delay the development of flashover conditions in the room. Based on research conducted by NIST, performance criteria were developed to limit the size of the mattress fire and reduce the likelihood of it involving other objects in the room. The Commission believes that, while the proposed standard may be less effective in isolated circumstances, the objective of the standard can be met with the performance criteria specified: maximum 200 kW peak heat release rate during the 30-minute test and maximum 15 MJ total heat release in the first 10 minutes of the test. Laboratory tests of currently marketed crib mattresses of which the Commission is aware show unacceptable performance in one or both of these fire performance measures. Like full-size mattresses, these crib mattresses would also need to be improved to meet the requirements of the proposed standard.

10. *Comment.* One commenter suggested that a 60-minute test duration is needed in the standard to allow for fire and rescue workers to respond and help occupants escape.

The commenter notes that the longer test time will allow emergency responders to assist vulnerable citizens to escape fires involving mattresses and bedding. They report that response times can vary widely among local circumstances, from approximately 16 minutes to an hour or more.

Response. To estimate the proposed standard's potential effectiveness, the staff reviewed in-depth investigations that provided detailed information about fires that ignited mattresses and bedding, details of the occupants' situation, and occupants' actions during the fire. Most investigations also included documentation from the fire department that attended the fire. The in-depth investigations involved fires occurring during 1999–2004, and included a total of 195 deaths and 205 injuries. In some of these cases, even with traditional mattresses and bedding, other members of the household present at the time of the fire and emergency responders arriving within as little as 5 minutes were able to rescue victims.

With improved mattresses, those complying with the 30-minute test specified in the proposed standard, the fire growth is slowed considerably and flashover conditions are delayed, making successful rescue efforts of family members and emergency responders more likely. The Commission estimates that 310 to 330 deaths and 1,660 to 1,780 injuries resulting from mattress and bedding fires could be prevented annually by the proposed standard. A maximum additional 80 deaths and 280 injuries, considered addressable by the draft standard, might be further reduced with a 60-minute test. However, actual reductions would likely be much lower. This is because those considered likely to die or be injured in conditions associated with a proposed 30 minute test are those incapable of acting on their own and with no potential rescuer in the occupancy. Even with more time, in such circumstances, the fire continues to progress, and the chances of rescue are unpredictable.

Based on the preliminary regulatory analysis, the expected benefits of the proposed standard, incorporating a 30-minute test, are greater than the costs. The regulatory analysis also considered alternatives to the proposed standard, including a 60-minute test; neither this nor the other alternatives was shown to increase expected net benefits.

11. *Comment.* A few commenters expressed the need to maintain protection from the threat from cigarette ignitions while considering an open flame standard.

Response. The standard that addresses cigarette ignition resistance, the Standard for the Flammability of Mattresses and Mattress Pads, codified as 16 CFR part 1632, remains in effect unless it is modified or revoked by the Commission in a separate rulemaking proceeding. If such a rulemaking occurred, the Commission would thoroughly evaluate the need for maintaining both an open flame standard and the standard for cigarette ignition resistance.

Bedclothes Comments

Comment. Most of the commenters refer to the impact of burning bedclothes on mattress/bedding fires and express opinions on the potential scope of an open flame mattress standard. Some commenters urge the Commission to limit the scope of a standard to mattresses while opposing commenters recommend that either the scope be expanded to incorporate bedclothes or bedclothes should have ignition standards of their own.

Commenters in support of regulating bedclothes believe that studying the impact of burning bedclothes is appropriate and would assist in the development of better performing, safer products. They note that bedclothes contribute to the intensity and spread of the original ignition source often involved in mattress fires. Therefore, burning bedclothes become a significant ignition source to the mattress and impact the burning characteristics of the mattress and foundation. They further note that bedclothes alone have been shown to generate a fire large enough to pose a hazard and can alone be the cause of ignition to nearby items. According to these commenters, improving the flammability of certain bedding items, such as filled items, is economically feasible. One commenter claims that mattress fires cannot be adequately addressed without also

considering the flammability of bedclothes.

In support of limiting the scope to mattresses and not regulating bedclothes, some commenters identify bedding items as an uncontrolled variable. They claim that there is no way to predict the type of bedclothes that may be involved in an incident at any given time; the number and type of items used by consumers is indefinable and consumers select items based on season, fashion, and climate. In addition, according to these commenters, there is no objective method to determine if consumers would use regulated bedclothes; there is little data to suggest that regulating some selected items will have an impact on the hazard; and flammability performance should not be based on what consumers may or may not use as bedclothes. These commenters also state that most U.S. textile manufacturers already voluntarily test for small open flame ignition of bedclothes using ASTM voluntary test methods. They assert that the additional burden and expense of any regulation on bedclothes would be substantial and could not be justified.

Response. The Commission notes that bedclothes substantially contribute to the complexity and magnitude of the mattress fire hazard. In laboratory tests peak heat release rates as high as 800 kW were observed from some larger bedclothes items. This presents a clear risk of flashover; and this heat release rate is much higher than that allowed for a mattress/set in the proposed standard. The extent to which bedclothes can be modified in a manner that is technologically practicable and economically feasible is unclear at this time. However, reducing the contribution of certain high fuel load bedding items to a mattress/bedding fire is desirable. The Commission is issuing an ANPR for a bedclothes flammability standard. The Commission believes that such a standard could increase the likelihood that mattress/bedding fire losses are effectively reduced.

K. Preliminary Regulatory Analysis

The Commission has preliminarily determined to issue a rule establishing a flammability standard addressing the open flame ignition of mattresses. Section 4(i) of the FFA requires that the Commission prepare a preliminary regulatory analysis for this action and that it be published with the proposed rule. 15 U.S.C. 1193(i). The following discussion, extracted from the staff's memorandum titled ''Preliminary Regulatory Analysis of a Draft Proposed Standard to Address Open-Flame Ignitions of Mattresses,'' addresses this requirement. [8]

1. Introduction

There were an estimated 18,900 fires where the first item ignited was mattress/bedding in 1998 (the last year for which detailed data comparable to previous years are available). These fires caused an estimated 2,260 civilian injuries, 410 deaths, and $255.4 million in property losses. As discussed elsewhere in this document, NIST has conducted extensive research and developed a test methodology to test open flame ignition of mattresses.

California Technical Bulletin (TB) 603, which is based on the use of NIST test burners designed to mimic the local thermal insult (heat flux levels and duration) imposed by burning bedclothes, is scheduled to become effective in California January 1, 2005. TB 603 requires all mattress/foundation sets, mattresses intended to be used without a foundation, and futons to meet the following pass/fail criteria: (1) The peak heat release rate (''PHRR'') does not exceed 200 kW during the 30 minute test, and (2) the total heat release does not exceed 25 mega joules (MJ) in the first 10 minutes of the test.

Large mattress manufacturers may eventually produce TB 603-compliant mattresses for sale nationwide, because of legal liability and production logistics. In the short-run, however, some manufacturers may limit their sale of TB 603-complying mattresses to California. Sealy's president and CEO said that ''[they] plan to be ready by the end of this year [2004] if a national retailer wants the same product'' with fire resistant technology, but will not convert all production by January 2005 (Furniture Today, March, 10, 2004). Smaller producers are more likely to wait until they have a better idea of enforcement efforts in California, or until a federal standard is adopted. The mattress industry, represented by ISPA, supports the development of a mandatory federal standard (Furniture Today, May, 10, 2004). A Federal standard would eliminate the uncertainty that may result from having different flammability standards for different states.

2. The Proposed Standard: Scope and Testing Provisions

The proposed standard will apply to all mattresses, where the term mattress means a ticking (*i.e.*, an outer layer of fabric) filled with a resilient material used alone or in combination with other products intended or promoted for sleeping upon. This definition is discussed further in section G.2. above.

A typical innerspring mattress construction might include ticking; binding tape fabric; quilt cushioning with one or more separate layers; quilt backing fabric; thread; cushioning with one or more separate layers; flanging; spring insulator pad; spring unit; and side (border) panels. Options for meeting the standard include the use of one or a combination of the following: fire resistant ticking; chemically treated or otherwise fire resistant filling products; or a fire blocking barrier (either a sheet style barrier, sometimes called a fabric barrier, or a high-loft barrier, sometimes called a fiber barrier). The fire blocking barrier is placed either directly between the exterior cover fabric of the product and the first layer of cushioning materials, or beneath one or more ''sacrificial'' layers that can burn without reaching the proposed heat release constraints.

There are already over twenty different vendors of fire resistant materials associated with the production of mattresses, including barriers, ticking, foam, tape, and thread. These materials include chemically treated cotton, rayon, and/or polyester, melamine, modacrylic, fiberglass, aramid (Kevlar''), or some combination of them. The cost of using sheet barriers is higher than using high-loft barriers, since sheet barriers are thin and therefore could not be substituted for an existing foam or cushioning layer. There is also concern that some sheet barriers, unlike high-loft barriers, may reduce the comfort of the sleeping surface.

To qualify a prototype, three mattresses/sets must be tested and must pass the test requirements. To obtain a passing result, each mattress/set must pass a 30 minute test, where the PHRR does not exceed 200 kW and the total heat release does not exceed 15 MJ in the first 10 minutes of the test. If any of the sets fail, the problem must be corrected, the prototype must be retested and pass the test (in triplicate). Manufacturers may sell any mattress/set based on a qualified prototype. Manufacturers may also sell a mattress/set based on a prototype that has not been tested if that prototype differs from a qualified prototype only with respect to (1) mattress/foundation size; (2) ticking, unless the ticking of the qualified prototype has characteristics designed to improve performance on the burn test; and/or (3) any component, material, or method of construction that the manufacturer can demonstrate, on an objectively reasonable basis, will not cause the prototype to exceed the test criteria specified above.

If one or more establishments (plants within the same firm) or independent

firms choose to ''pool'' prototypes, then each pooling plant or firm is required to test one mattress/set for confirmation testing. If that set fails, then the plant or firm will need to test another mattress/set after correcting its production to make sure that it is identical to the original prototype.

A pooling firm may sell other mattresses that have not been tested by the pooling firm if they differ from the pooled prototype only with respect to (1) mattress/set size; (2) ticking, unless the ticking of the qualified prototype has characteristics designed to improve performance on the burn test; and/or (3) any component, material, or method of construction that the manufacturer can demonstrate, on an objectively reasonable basis, will not cause the prototype to exceed the test criteria specified above.

3. Products and Industries Potentially Affected

According to ISPA, the mattress producers' trade organization, the top four producers of mattresses account for almost sixty percent of total U.S. production. In total, there are 639 establishments (as of 2001) that produce mattresses in the U.S., using the U.S. Department of Commerce NAICS (North American Industry Classification System) Code 33791 for mattresses. The top four producers account for about half of the number of all these establishments. The number of establishments has been declining over time due to mergers and buy-outs. Total employment in the industry, using the NAICS Code 33791, was 25,500 workers in 2001.

The mattress manufacturing industry has three key supplying industries: spring and wire product manufacturing, broad-woven fabric mills, and foam products manufacturing. Depending on the type of fire resistant barrier chosen by different manufacturers, the demand for foam padding for mattresses might decline if it were replaced by the high-loft barrier in the construction of the mattress and foundation. This would be offset by an increase in the demand for the high-loft barrier. If sheet barriers were chosen by some mattress producers, then sales of, and employment by, the sheet barrier suppliers would increase. Since the sheet barriers would not replace other inputs, there would most likely be no offsetting effect on other industries. Fiberglass, melamine, and aramid producers may also be affected to the extent that they are used to produce fire resistant materials used in mattress production.

Manufacturers of bedclothes may also be affected by the proposed standard. Sales of bedclothes may increase or decrease based on whether consumers view bedclothes as complements or substitutes for a new mattress/set (complements are goods generally consumed together, substitutes generally substitute for each other). For example, if people tend to buy all parts of a new bed (mattress, foundation, and bedclothes consisting of a comforter, pillows, and sheets) at the same time, then an increase in the quantity of mattresses sold would cause an increase in sales of bedclothes. If, alternatively, people tend to have a fixed budget from which to buy all mattresses and bedding items, then an increase in the quantity of mattresses sold would lead to a decrease in sales of bedclothes. Also, if the decision to buy a new mattress (or mattress/set) involves buying a mattress that is much thicker than the one currently in use, then consumers will most likely buy new sheets (and possibly matching pillowcases and other bedclothes items) to fit the new thicker mattress.

If the cost increase is relatively small or there is no resulting increase in the price of a mattress/set, then the demand for bedclothes will only be affected if consumers place a higher value on the safer mattress and replace their current mattress sooner than they would have with no standard in place. An increased demand for the safer (and thicker, if the current mattress is relatively old) mattress will likely result in an increased demand for sheets that fit the newer mattresses. This effect, however, is not directly resulting from the adoption of the proposed standard since the thickness of the mattress need not be increased by the presence of either type of barrier. It is the result of the increased utility some consumers may derive from the safer mattress and the consequent increase in demand for bedclothes. The increased demand for safer mattresses would most probably lead to an increase in sales and employment in the spring and wire products, broad-woven fabric, and foam products industries, as well as in the mattress and bedclothes industries.

Other producers that could potentially be affected, if the price change associated with producing compliant mattresses is significant, are those of other substitute products, like airbeds, waterbeds, * * * etc. that contain no upholstered material and would, therefore, not be covered by the proposed standard. Their sales may increase as a proportion of total bedding products.

4. Characteristics of Mattresses Used in U.S. Households

The total number of U.S. conventional mattress shipments was 21.5 million in 2002 and is estimated to be 22.1 in 2003 and 22.8 in 2004. Mattress shipments have grown at an average rate of three percent over the period 1981 to 2004. Unconventional mattresses (including futons; crib mattresses; juvenile mattresses; sleep sofa inserts; and hybrid water mattresses) are estimated to be about ten percent of the total market. This yields an estimated total number of mattresses produced domestically of 25.3 million in 2004. The value of mattress and foundation shipments in 2002, according to ISPA, was $3.26 and $1.51 billion respectively.

The CPSC Product Population Model (PPM) estimate of the number of mattresses in use in different years is based on available annual sales data and an estimate of the average product life of a mattress. Industry representatives assert that the average consumer replaces a mattress/set after ten years. A 1996 CPSC market study estimated the average expected life of a mattress to be 14 years. The PPM estimates the number of (conventional and non-conventional) mattresses in use in 2004 to be 233 million mattresses, using a 10-year average product life, and 302.6 million mattresses, using a 14-year average product life. These two numbers are later used to estimate the pre-standard baseline risk and the expected benefits of the proposed standard.

This analysis focuses principally on queen-size mattresses because they are the most commonly used. In 2002 queen-size mattresses were used by 34 percent of U.S. consumers. Following the queen-size are the sizes: Twin and Twin XL (31.2 percent), Full and Full XL (21 percent), King and California King (11 percent), and all other (2.6 percent). ISPA data reflect that the average size of a mattress is increasing. The average manufacturing price in 2002 was $152 for a mattress of average size and $86 for a foundation of average size. Hence the average manufacturing price of a mattress/set was about $238 in 2002.

There are no readily available data on average retail prices for mattress/foundation sets by size. ISPA, however, reports that mattress/foundation sets selling for under $500 represent 40.7 percent of the market. Mattress/foundation sets selling for between $500 and $1000 represent 39.2 percent of the market.

5. Trends in Mattress/Bedding Residential Fires, Deaths, Injuries, and Property Losses

Open-Flame Ignition. The staff estimates average annual mattress/bedding fires from open-flame ignitions (including candles, matches and lighters) to have been 8,367 and 6,367 over the 1993–95 and 1996–98 periods respectively. This represents a reduction of 23.9 percent. The resulting average mattress/bedding deaths, injuries, and property losses from open-flame ignitions have decreased by 28.2 percent, 22.1 percent, and 5.6 percent respectively, over the 1993 to 1998 period. When adjusted for inflation, the decrease in the value of property losses becomes 37.7 percent.

Smoking Material Ignition. The staff estimates average annual mattress/bedding fires from smoking material ignition (including cigarettes, cigars, and pipes) to have been 7,733 and 6,067 over the 1993–95 and 1996–98 periods respectively. This represents a reduction of 21.6 percent over the 1993 to 1998 period. Average annual deaths, injuries, and property losses due to mattress/bedding smoking material ignitions have decreased by 4.7 percent, 19.7 percent, and 9.7 percent, respectively, over the same period. When adjusted for inflation, the decrease in the value of property losses becomes 40.4 percent.

Other Ignition Sources. The staff estimates average annual mattress/bedding fires from other ignition sources (including sparks, embers, or flames escaping from fueled equipment, arcs or sparks from electric equipment, small torches, hot embers, and fireworks, heat escaping from fueled equipment, molten material, short circuit arc, and heat overloaded equipment) to have been 8,633 and 7,767 over the 1993–95 and 1996–98 periods respectively. This represents a reduction of 10 percent over the 1993 to 1998 period. Average annual injuries and inflation-adjusted property losses have decreased by 13.8 percent and 38.7 percent respectively. Average annual deaths increased by 51.7 percent (from 97 to 147). This increase offsets the decrease in deaths resulting from open-flame and smoking material ignition fires. The annual average number of deaths from all ignition sources remained unchanged over the period, equal to 510.

6. Expected Benefits of the Proposed Standard

The expected benefits of the proposed standard are estimated as reductions in the baseline risk of death and injury from all mattress fires, based on a CPSC staff study of fire investigations from 1999–2004. Risk reductions are then calculated on a per-mattress-in-use basis based on estimates of the number of mattresses in use. The monetary value of expected benefits per mattress is derived using current (*i.e.*, 2004) estimates for the value of a statistical life and the average cost of a mattress fire injury. To derive the monetary value of expected benefits over the life of a mattress, the expected annual benefits are discounted (using a three percent discount rate), and then summed over the expected life of the mattress. The analysis considers mattress lives of 10 and 14 years.

The potential benefits of the proposed standard consist of the reduction in deaths, injuries, and property damage that would result. Since the objective of the proposed standard is to reduce the likelihood of flashover or increase the time before flashover occurs, and not to reduce fires, changes in property losses associated with the proposed standard are hard to quantify. Property losses are expected to decline but the extent of the decline cannot be quantified. Consequently, for purposes of this analysis, no reduction in property losses is assumed. That is, all expected benefits from the proposed standard are in the form of prevented deaths and injuries. This underestimates net benefits, since there will likely be some benefits from reduced property losses.

The proposed standard is expected to reduce the likelihood of flashover resulting from fires started by smoking materials or other ignition sources, as well as those started by open-flame ignition. Fires, injuries, and property losses resulting from smoking material ignition and other ignitions, and deaths from smoking material ignition are lower for the 1996–98 period than the 1993–95 period. (Deaths from other ignition sources are more than 50 percent higher). Any additional reduction in these figures due to the proposed open-flame ignition standard will translate into societal benefits, as will be discussed in the benefit-cost analysis (Section 8).

Estimates of the effectiveness of the proposed standard are based on a CPSC staff evaluation of in-depth investigation reports of fires (including details of the occupants' situations and actions during the fire) occurring in 1999–2004 in which a mattress or bedding was the first item to ignite, the fire was of the type considered addressable by the proposed standard, and a civilian death or injury resulted. Most of the investigations also included documentation from the fire department that attended the fire. Some incident reports were initiated from death certificates with follow-up documentation from the fire department. This resulted in a total of 195 deaths and 205 injuries in the investigations to be evaluated. The distribution of mattress ignition sources was not representative of all fires involving mattresses and thus the data were weighted to match the NFIRS-based national fire data distributions.

Evaluations of the fire incidents by CPSC staff reviewers used the results of NIST testing (Ohlemiller, 2004; Ohlemiller and Gann, 2003; Ohlemiller and Gann, 2002) conducted to assess the hazard produced from burning mattresses and bedclothes. Specifically, the evaluations were based on the expectation that occupants in bed when the fire ignited but able to escape the burning bedclothes in the first three to five minutes faced a minimal hazard. Occupants in direct contact with burning bedclothes for a longer period (5 to 10 minutes) would be subject to potentially hazardous levels of heat release. If the burning bedclothes did not ignite other non-bedding items or produce flashover at this time, heat release would subside temporarily and then begin to increase as the involvement of the mattress increased.

These conditions would allow occupants 10 to 15 minutes to escape the room of origin before the situation in the room would become untenable. Since the proposed standard is expected to slow the rate of fire spread and hence increase escape time, assuming that bedclothes do not contribute enough heat to pose a hazardous condition, it was assumed that no deaths would occur among people who were outside the room of origin at the time of ignition, unless they entered the room later or were incapable of exiting on their own. The analysis focused on reduction of deaths and injuries because the proposed standard is designed to limit fire intensity and spread rather than prevent ignition.

Each investigation was evaluated by CPSC staff reviewers to identify the features related to the occurrence of a death or injury once the fire was ignited. These included casualty age, casualty location when the fire started (at the point of ignition, in the room of origin but not at the point of ignition, or outside the room of origin), whether the casualty was asleep, or suffered from additional conditions likely to increase the time needed to escape, whether the casualty engaged in fighting the fire, and whether a rescuer was present. All of these conditions were used to determine a range for the likelihood that each individual death or injury would have

been prevented had the draft proposed standard been in effect. Percentage reductions of deaths (injuries) within subcategories of heat source and age group were applied to equivalent subcategories of the national estimates based on the NFIRS and NFPA data for 1995–1999. The estimated reductions per category were summed and the overall percentage reductions were calculated as the percent of addressable deaths (or injuries) that would have been prevented if the likelihood of flashover were reduced in the first 30 minutes and victims had 10 to 15 minutes of escape time.

The staff indicates that the proposed standard is expected to reduce all addressable deaths from mattress/bedding fires by 80 to 86 percent and reduce all addressable injuries from mattress/bedding fires by 86 to 92 percent. The results vary only slightly by source of ignition. These estimated effectiveness percentages result in the prevention of an estimated 310 to 330 deaths and 1660 to 1780 injuries annually, for the 1998–2002 period.

The staff's analysis presents the estimated annual deaths and injuries that are expected to be prevented by the proposed standard, based on average figures for 1998–2002. For purposes of this analysis, it is assumed that the annual deaths and injuries prevented by the proposed standard equal the average annual deaths and injuries prevented for the 1998–2002 period. The analysis is conducted as if the standard went into effect in 2004. All dollar estimates are based on constant 2004 dollars. A discount rate of 3 percent and average expected lives of a mattress of 10 and 14 years are also assumed.

The estimated ranges of deaths and injuries prevented are calculated by applying the range of percent reductions to average addressable deaths and injuries for the period 1998–2002. Staff's analysis also presents the risk reduction in deaths and injuries that would result from the proposed standard (per million mattresses). Based on the estimated number of mattresses in use (described in Section 4) and an average expected life of 10 years, the annual reduction in the risk of death equals 1.33 deaths per million mattresses (310 deaths divided by the estimated 233 million mattresses in use in 2004) to 1.42 per million mattresses (330 deaths / 233 million mattresses). The estimated reduction in the risk of injury, similarly calculated, equals 7.12 to 7.64 injuries per million mattresses for an estimated 10-year life of a mattress. The estimated risk reductions for an estimated 14-year life of a mattress are 1.02 to 1.09 deaths and 5.49 to 5.88 injuries per million mattresses.

Annual risk reductions resulting from the proposed standard are used to derive the monetary benefits from reduced deaths and injuries. The estimated reduction in the risk of death is multiplied by the value of a statistical life (and divided by a million) to derive a first-year monetary estimate for the range of benefits from lives saved per mattress. Based on the existing literature, a value of a statistical life of five million dollars is assumed (Viscusi, 1993). The estimated reduction in the risk of injury is similarly used to derive the range of first-year monetary benefits from injuries prevented. The benefits from preventing an injury (the cost of an injury) in 2004 are estimated to average about $179,300, based on Miller *et. al.* (1993). The first-year benefits associated with preventing deaths and injuries equal $7.93 to $8.45 for an estimated mattress life of 10 years and $6.11 to $6.51 for an estimated mattress life of 14 years.

Lifetime benefits are derived by projecting annual benefits for the life of the mattress and summing the discounted (at a rate of 3 percent) stream of annual benefits (measured in constant dollars). The number of mattresses in use is projected to grow at a rate of zero to three percent, based on the average growth rate for the 1981–2002 period. Since the number of deaths and injuries are implicitly assumed to remain constant over time, a positive growth rate of mattresses in use implies a declining risk over time. The lower end of the ranges for estimated (10 and 14 years) lifetime benefits correspond to a 3 percent projected growth rate and the lower end of the effectiveness ranges. The upper end of the ranges for estimated (10 and 14 years) lifetime benefits correspond to a zero percent projected growth rate and the upper end of the effectiveness ranges. For an expected mattress life of 10 years, the resulting expected lifetime benefits of saved lives associated with the proposed standard equal $51.70 to $62.22 per mattress. The corresponding benefits of prevented injuries equal $9.93 to $12.03. Hence, for an expected mattress life of 10 years, the expected total lifetime benefits of a compliant mattress equal $61.66 to $74.25. For an expected mattress life of 14 years, total benefits equal $59.88 to $75.71 per mattress. The sensitivity analysis section below examines how the results might change when a discount rate of seven percent is used.

7. Expected Costs of the Proposed Standard

This section presents the expected resource costs associated with the proposed standard. Resource costs are costs that reflect the use of a resource that would have been available for other uses had it not been used in conjunction with the production of mattresses compliant with the proposed standard. These costs include material and labor costs; testing costs; costs to wholesalers, distributors, and retailers; costs of producers' information collection and record keeping; costs of quality control/quality assurance programs; and compliance and enforcement costs. The effect on retail prices will be discussed in Section 8.

Material and Labor Costs. To comply with the proposed standard, the construction of most mattress/sets will include a barrier technology with improved fire performance. This barrier may be thick (high-loft) or thin (sheet). High-loft barriers are generally used to replace some of the existing non-woven fiber, foam, and/or batting material, leading to a smaller increase in costs than sheet barriers, which constitute an addition to production materials (and costs).

According to several barrier producers and mattress manufacturers, the price of a high-loft barrier that would make a mattress comply with the proposed standard, defined to have a width of 88 to 92 inches, is $3.00 to $5.00 per linear yard. The high-loft barrier replaces the currently-used polyester batting, which costs an average of $0.50 to $1.70 per linear yard. Hence, the net increase in the cost attributed to the use of the high-loft barrier is $1.30 to $4.50 per linear yard, which translates to a net increase in barrier-related manufacturing costs of $7.80 to $27.00 for a queen-size mattress/set.[4] The queen-size is used for all the cost estimates, because it is the mode size, used by 34 percent of consumers in 2002.

According to several barrier producers and mattress manufacturers, the price of a sheet barrier that would make a mattress comply with the proposed standard is $4.00 to $6.00 per linear yard. Because of its different texture, the sheet barrier would generally not replace any of the materials being used in the construction of the mattress/set.[5]

[4] This calculation is based on the assumption that a queen-size mattress/set requires six linear yards of the barrier mateiral to be used in the two (top and bottom) panels of the mattress and the side panels of both the mattress and foundation. Some producers are able to use less than six linear yards, which reduces their cost per queen mattress/set.

[5] The only exception to this might involve using a sheet barrier in the side panel of the mattress and

This translates to $24.00 to $36.00 for a queen-size mattress/set. The large difference in the net cost of the two barrier types suggests that if a barrier's fire performance is not a function of its type, most manufacturers will use high-loft barriers, the less costly alternative. A large mattress manufacturer also indicated that mattresses produced with sheet barriers in the top panel of the mattress (as opposed to the side panels) may be less comfortable.

In addition to the increase in material costs due to the use of a barrier, costs will increase due to the use of fire-resistant (FR) thread for tape stitching. According to several thread producers, the cost of FR thread is $0.41 to $0.60 per queen-size mattress/set. Given that the cost of nylon (non-FR) thread is about $0.10 per queen-size mattress/set, the net increase in costs per queen-size mattress/set due to the use of FR thread is $0.31 to $0.50.

Costs may also increase due to slightly reduced labor productivity. Based on industry estimates of an average of two labor hours for the production of a queen-size mattress/set, and a 10 percent reduction in labor productivity and an industry average hourly wage rate of $11.50, the cost increase due to reduced labor productivity is about $2.30.

The increase in the materials and labor costs of a mattress, is thus equal to $10.41 ($7.80 barrier cost + $0.31 thread cost + $2.30 labor cost) to $29.80 ($27 barrier cost + $0.50 thread cost + $2.30 labor cost) for a high-loft barrier and $26.61 ($24.00 barrier cost + $0.31 thread cost + $2.30 labor cost) to $38.80 ($36 barrier cost + $0.50 thread cost + $2.30 additional labor cost) for a sheet barrier.[6] Various types of high-loft and sheet barriers are widely available for sale and therefore it is expected that those whose prices are at the upper end of the range will either not be produced (because mattress manufacturers will not buy them) or their prices will drop (so that they can compete with other barriers available for sale). Hence the total materials and labor costs will most likely be closer to the lower end of the estimated range.

Costs of Prototype and Confirmation Testing. Each mattress/set prototype is required to be tested in triplicate for prototype qualification. According to industry representatives, the cost of testing per twin-size mattress/set may be about $500: the sum of the average cost of the materials and shipping ($100) and the cost of the use of the lab ($400). Hence, the cost of testing three mattresses/sets for prototype qualification equals $1500. Additionally, if some mattress/set prototypes do not pass the first time, then the cost will be higher, because additional tests will be done after action is taken to improve the resistance of the prototype. If 10 percent of mattresses are retested, then the average cost of testing a prototype would be 10 percent higher, or $1650. This cost is assumed to be incurred no more than once per establishment for each prototype. It is expected that a qualified prototype will be used to represent a mattress construction (*e.g.*, single-sided pillow top) with all other prototypes using the same construction (with different size and different ticking materials) being based on the qualified prototype. If companies pool their prototype definitions across different establishments or different companies, testing costs would be smaller as all but one of the firms/establishments producing to the specification of a pooled prototype will burn one mattress (for the confirmation test) instead of three (for the prototype test). The probability of a mattress failing a confirmation test is small. Therefore, it is expected that the average cost of testing per mattress will be lower for firms and/or establishments that pool their results than for those that do not.

If manufacturers test every mattress construction (*e.g.*, single-sided pillow top, double-sided pillow-top, tight-top, euro-top, * * * etc.), which is estimated, based on conversations with manufacturers, to average about twenty per manufacturer, for every establishment in a given year, then their average testing cost per mattress would approximately equal 92.5 cents ($1650 × 20 constructions × 639 establishments/ 22.8 million conventional mattresses) per mattress for the first year of production. If manufacturers use a qualified prototype of the least fire-resistant mattress/set construction (''worst case'') to represent other mattress/set constructions, then the average cost of testing per mattress for the first year of production will be reduced. Pooling testing results across establishments and/or firms will further reduce the average cost of testing per mattress. On an annual basis testing costs will be further reduced because prototypes need only be tested in the year they are first developed.

Cost of Information Collection and Record Keeping. In addition to prototype testing, the proposed standard will require detailed documentation of all tests performed and their results including video or pictures; prototype or production identification number; date and time of test; and name and location of testing facility; test room conditions; and test data for as long as the prototype is in production and for three years after its production ceases. Manufacturers are also required to keep records of a unique identification number for the qualified prototype and a list of the unique identification numbers of each prototype based on the qualified prototype and a description of the materials substituted and/or the size change. Moreover, they are required to document the name and supplier of each material used in construction of a prototype and keep physical samples of the material. Additionally, they are required to identify the details of the application of any fire retardant treatments and/or inherently fire resistant fibers employed relative to mattress components. This documentation is in addition to documentation already conducted by mattress manufacturers in their efforts to meet the cigarette standard. Detailed testing documentation will be done by the test lab and is included in the estimated cost of testing. Based on CPSC Office of Compliance staff estimates, all requirements of the proposed standard are expected to cost an establishment about 110 minutes, or 1.3 hours, per qualified prototype. Assuming that every establishment will produce 20 different qualified prototypes, the increase in record keeping costs is about $935 (110 minutes × 20 qualified prototypes × $25.50 in average civilian workers' compensation per hour) per establishment per year. (Note that pooling among establishments or using a qualified prototype for longer than one year will reduce this estimate.) This translates to an average cost of 2.6 cents per mattress for an average establishment, with average output of 35,681 conventional mattresses.

Cost of Quality Control/Quality Assurance Programs. To ensure that all mattresses are produced to the prototype specification across all factories and over the years for which a production line exists, mattress

foundation. Because the existence of cushioning along the side of the mattress and foundation would probably not be noticed or missed by consumers, substitution of the sheet barrier for the material currently being used in the side panel may be implemented to reduce the cost of using the sheet barrier. The side panel is small, relative to the size of the entire surface area of a mattress/set, and its possibly different construction is therefore not included in the cost calculation. This leads to a slight over-estimation of the cost of the sheet barrier and consequently the relative cost of using a sheet instead of a high-loft barrier.

[6] Some producers are also using an FR mattress edge binding tape, which costs an average of $2.52 per mattress, while a non-FR tape costs an average of $1.68. This makes the net increase in costs, due to using FR edge binding tape, equal to $0.84. This cost is not added to the total production costs, because it is not required for the mattress to pass the burn test.

manufacturers will need a thorough well-documented quality control/assurance program. The top 12 mattress producers (with a market share of almost 80 percent) have existing quality control programs which could be modified to fit the new standard with minimal additional costs. Smaller producers, whose quality control programs are less detailed or non-existent, will incur some incremental costs as a result of the proposed standard. These incremental costs will be small for each manufacturer and less when measured per mattress. (See the section on impact of the proposed standard on small businesses for a description of their cost of quality control and quality assurance programs.)

Additionally, although the proposed standard does not require production testing, it encourages random production testing to assure manufacturers that their mattresses continue to meet the requirements of the rule, as a possible component of the quality control/quality assurance program. Assuming that an average of 3 mattress/foundation constructions will be tested per establishment per year yields an estimated cost of production testing of about $1500. Based on this assumption, the estimated cost of testing mattress/foundation sets for quality assurance purposes, therefore, equals 4.2 cents per mattress ($1500/35,681) for an average establishment.

The labor needed to meet the quality assurance measures required by the standard is estimated by CPSC Office of Compliance staff to be 224 minutes per establishment per prototype per year. Assuming that every establishment will produce 20 qualified prototypes, the increase in labor costs associated with quality assurance requirements of the proposed standard is about $1904 (224 minutes × 20 qualified prototypes × $25.50 average civilian workers' compensation per hour) per establishment per year. (Note that pooling among establishments or using a qualified prototype for longer than one year will reduce this estimate.) This yields an average cost of 5.3 cents per mattress for an average establishment, with average output of 35,681 mattresses. Hence total costs of quality assurance/quality control programs may average about 9.5 cents (4.2 + 5.3) per conventional mattress per year.

Costs to Wholesalers, Distributors, and Retailers. An added cost of the proposed standard is the increase in costs to wholesalers, distributors, and retailers in the form of additional storage, transportation, and inventory financing costs. Since a mattress complying with the proposed standard will not be bigger than a similar mattress produced before the standard becomes effective, storage and transportation costs are not expected to increase. Inventory financing costs will increase by the average cost of borrowing money, applied to the wholesale price of a mattress over the average inventory holding time period. Since most mattress producers use just-in-time production and have small inventories, this additional cost will probably not exceed ten percent of the increase in production cost (which is the sum of material, labor, testing, record keeping, and quality assurance costs). A ten percent mark-up is, therefore, being used to measure the cost to wholesalers, distributors, and retailers. This yields a resource cost to wholesalers, distributors, and retailers equal to $1.15 to $3.98 per mattress/set. Retail prices may increase by more than the ten percent mark-up. Section 8 discusses the impact of the proposed standard on retail prices of mattresses.

Costs of Compliance and Enforcement. Compliance and enforcement costs refer to the costs incurred by CPSC to ensure that manufacturers are complying with the proposed standard. Based on past experience with the existing mattress standard, the estimated CPSC inspection time spent per location (establishment) equals 33 hours for inspection and 6 hours for sample collection. This yields a cost per inspection of about $1,664.52 (39 hours × $42.68, the average wage rate for CPSC inspectors). Additionally, compliance officers spend an average of 20 hours per case, making their cost equal to $1,032.80 (20 hours × $51.64, the average hourly wage rate for compliance officers). This yields an average compliance and enforcement total labor cost of $2,697.32 per inspected establishment per year.

It should be noted that the expected cost per establishment, if less than one hundred percent of establishments are inspected every year, equals the cost per inspected establishment times the probability that a given establishment will be inspected. Though the probability that a given establishment will be inspected in a given year is not known, assuming that a third of all establishments will be inspected (*i.e.*, about 213 establishments) yields a compliance and enforcement total expected labor cost of $899.11 ($2,697.32 × (⅓)) per establishment per year.

In addition to labor costs, CPSC will incur testing costs. It should be noted that the decision to collect samples after an inspection visit is made at the discretion of the investigator and, therefore an accurate assumption about the number of samples collected and sent for a burn test cannot be made. If, based on inspection, samples from 10 percent of all inspected establishments were to be collected and sent to a lab for a burn test, and if samples representing 5 qualified prototypes are taken from each of these establishments, then the total cost of CPSC testing will be $157,500 (5 qualified prototypes × $1,500 (the cost of testing up to 3 mattresses for each qualified prototype) × 21 (10 percent of 213 inspected establishments)). These assumptions about frequency of testing yield an expected cost of testing per establishment of $246.48 ($157,500/639).

Therefore the expected total CPSC wage and testing costs associated with the proposed standard per establishment per year equal $1,145.59 ($899.11 + $246.48). With an average production of 35,681 mattresses per establishment (22.8 million mattresses divided by 639 establishments), the average CPSC wage and testing costs equal 3.2 cents per mattress ($1,145.59/35,681). These costs are expected to decrease over time as manufacturers learn the requirements of the proposed standard.

Total Resource Costs. Therefore total resource costs (including material costs, labor costs, costs of prototype and confirmation testing, paperwork collection and record keeping costs, costs of quality control/quality assurance programs, production testing costs, costs to wholesalers, distributors, and retailers, and costs of compliance and enforcement) are estimated to range from $12.63 to $43.86 per mattress. This range includes both the high-loft and sheet barriers. The section on the impact of the proposed standard on small businesses and other small entities discusses how costs of testing and quality control/quality assurance programs may differ for small businesses and strategies that small manufacturers might adopt to reduce these costs.

Projected Future Costs. It is possible that costs associated with the standard will decline over time. A supplier of fire resistant barriers predicts that the price of the barriers will decline by 40 percent in the next two years, due to decreased uncertainty and increased competition. (They have already dropped significantly since TB603 was proposed.) The increase in labor costs due to decreased productivity is expected to be temporary and be reduced when workers get more training and/or the older machines get replaced

with newer machines that are more capable of handling the FR thread and material used in fire resistant barriers. Moreover, as noted above, prototype testing costs are expected to decline after the first year of the standard.

The proposed standard references an effective date of twelve months following publication of a final rule. The costs reported here are based on the assumption that supplier companies will be able to maintain existing capacity. If federal standards for bedclothes and upholstered furniture were mandated at the same time and input producers were not given enough time to increase their capacity, input prices would rise in the short-run because of increased demand for the FR material used by all three industries.

Unquantifiable Costs. A mattress manufacturer indicated that in response to an FR mattress standard, the number of models/styles produced may be cut by half. If this response is typical, then there may be a reduction in consumers' utility, because of the reduction in mattress types that they would have to choose from. Others indicate that there will be an aversion to producing double-sided mattresses, because it would be harder for them to pass the burn test. Double-sided mattresses possibly have a longer expected life than single-sided ones. To the extent that consumers prefer double-sided mattresses to single-sided mattresses, the shift away from producing double-sided mattresses imposes a non-monetary cost. Though unquantifiable, this reduction in choices of construction type and design is an added cost to consumers of the proposed standard.

Another unquantifiable cost is the possible increase in liability insurance faced by mattress manufacturers. Because the draft proposed standard measures the performance of the entire mattress when exposed to fire, and not its individual components, liability will be shared by input suppliers and mattress manufacturers. Industry representatives expect that manufacturers' liability insurance will increase to reflect the additional possibility of litigation. This increase, however, cannot be quantified because of the novelty of this performance test. Compliance of more mattress firms with the California TB 603 standard may enable us to estimate the additional liability insurance. Notice that any increase in liability insurance faced by FR input suppliers will be included in the price charged for the FR inputs and does not add to the total increase in resource cost that is expected to result from the proposed standard.

8. Benefits and Costs of the Proposed Standard

This section compares benefits and costs of the proposed standard, presents a sensitivity analysis, and highlights the impact of the proposed standard on retail prices, small businesses, children, and the environment. The sensitivity analysis examines the effect of changing some of the assumptions used earlier. The analysis shows that net benefits continue to be positive under a reasonable range of assumptions about the death and injury effectiveness of the proposed standard, the reduction in injuries resulting from the proposed standard, the value of a statistical life estimate, the discount rate, or the expected mattress life.

The expected aggregate lifetime benefits associated with one year's production of mattresses (25.3 million units) using a discount rate of three percent and an expected 10-year mattress life are $1.56 to $1.88 billion ($61.66 to $74.25 per mattress × 25.3 million mattresses). The corresponding expected aggregate costs of the proposed standard are $0.32 to $1.11 billion ($12.63 to $43.86 times 25.3 million). The resulting net aggregate benefits equal $0.45 to $1.56 billion ($17.79 to $61.62 times 25.3 million). For a mattress life of 14 years (and a 3 percent discount rate), aggregate lifetime benefits, costs, and net benefits of the proposed standard associated with one year of production are $1.52 to $1.92, $0.32 to $1.11, and $0.41 to $1.60 billion respectively. The expected benefits of the proposed standard will accrue for a long period of time and discounted net benefits will, therefore, be much greater than net benefits associated with only the mattress production in the first year the standard becomes effective.

Sensitivity Analysis. The previous analysis compares benefits and costs of the proposed standard using expected mattress lives of 10 and 14 years, a discount rate of 3 percent, an expected effectiveness rate of the proposed standard of 80 to 86 percent of deaths and 86 to 92 percent of injuries, an estimated value of a statistical life of 5 million dollars, and an estimated cost of injury of $179,300. This section examines the effect of changing any of these assumptions on the expected net benefits of the proposed standard.

Comparing expected benefits and costs of the proposed standard, it is clear that net benefits are expected to be positive (*i.e.*, expected total benefits exceed expected costs) for an average mattress life of 10 or 14 years. Though increasing the expected mattress life from 10 to 14 years, while using the 3 percent discount rate, expands the positive range of net benefits, it does not affect the conclusion regarding net benefits. A further increase of the expected life of a mattress similarly would not affect the estimate of net benefits. For example, using the Product Population Model estimate of the number of mattresses in use based on an expected mattress life of 18 years (equal to 367.1 million mattresses) yields net benefits of $14.42 to $64.49 per mattress, using a discount rate of 3 percent.

Net benefits are also positive using discount rates of 3 and 7 percent. Using a 3 percent discount rate, net benefits per mattress equal $17.79 to $61.62 for an average life of 10 years and $16.01 to $63.08 for an average life of 14 years. Using a 7 percent discount rate, net benefits per mattress equal $9.36 to $50.88 for an average life of 10 years and $5.15 to $48.26 for an average life of 14 years. Assuming a larger discount rate reduces net benefits, because future benefits reaped over the life of the mattress contribute less to total benefits.

Net benefits are based on an estimated value of a statistical life equal to $5 million. Changing the estimate used for the value of a statistical life does not have a major impact on the results. For example, if $3 million, the lower bound estimate in Viscusi (1993), is used as an estimate of the value of a statistical life, net benefits become -$2.90 to $36.73 per mattress (using a 3 percent discount rate and an estimated mattress life of 10 years).[7] Alternatively, a $7 million estimate, the higher bound estimate in Viscusi (1993), yields net benefits equal to $38.48 to $86.51 per mattress (using a 3 percent discount rate and an estimated mattress life of 10 years).

Changing the estimate used for the cost of injury will have minimal impact on the results, because the share of benefits from reduced injuries is 16 percent of total benefits. Hence, even if there were no reduction in injuries from the proposed standard, the net benefits would be $7.86 to $49.59 per mattress (using a mattress life of 10 years and a 3 percent discount rate).

The analysis assumes that the effectiveness of the proposed standard ranges from 80 to 86 percent for deaths and 86 to 92 percent for injuries. The

[7] The range for net benefits was derived by subtracting the upper end of the cost range from the lower end of the benefits range to get the lower end of the range for net benefits and subtracting the lower end of the cost range from the higher end of the benefits range to get the higher end of the range for net benefits. Because of this method, both ends of the range for net benefits are a very unlikely occurrence.

net benefits will remain positive, with a lower effectiveness rate. For example, assuming an effectiveness rate of preventing death of only 55 percent yields net benefits of $1.86 to $39.84 per mattress and aggregate net benefits of 50 million to 1.01 billion dollars from all mattresses produced the first year the proposed standard is mandated (using a mattress life of 10 years, a 3 percent discount rate, and the same effectiveness for injuries as used in the baseline analysis). Also, assuming a smaller number of deaths and injuries before the proposed standard is mandated (a smaller baseline risk) would still result in positive net benefits. A 25 percent reduction in baseline death and injury risks yields net benefits of $2.38 to $43.06 per mattress and aggregate net benefits of $60 million to $1.09 billion from all mattresses produced the first year the mattress standard is mandated (using a mattress life of 10 years, a 3 percent discount rate, and the estimated effectiveness measures used in the baseline analysis).

Impact on Retail Prices. One of the top four mattress manufacturers in the industry has re-merchandised its product lines to lower the costs of other materials so that total costs (and prices) are the same as they were before the production of mattresses that comply with TB603. Other manufacturers have indicated that they will have to increase their price which, according to some manufacturers and based on reported traditional industry mark-ups, might translate to an increase in the retail price to consumers that could reach approximately four-fold the increase in manufacturer's costs. Hence the average increase in the price at which mattress manufacturers are willing to sell their products (supply price) will be anywhere between the price of a similar mattress without FR material and that price plus four times the increase in the costs of production. Given the presence of at least one company that will not increase the price, it is unlikely that the new average price will be close to the higher end of the range because of competition for market share among manufacturers.

The market (equilibrium) price is determined by the intersection of consumers' willingness to buy and producers' willingness to sell the product at different prices. The value the equilibrium price will take (relative to the price before the introduction of fire resistant mattress/sets) will be affected by the change in the demand and supply curves for fire resistant mattress/sets and their relative elasticities. Assuming that the demand curve is unaffected, the equilibrium price will reflect the price elasticity of demand (*i.e.* the sensitivity of the change in the quantity demanded to the change in price) as well as the shift in supply. In the short-run, consumers have a relatively elastic demand curve, because they can always postpone the purchase of a durable good, and therefore the increase in the equilibrium price is expected to be much lower than the increase in the supply price (what producers would want to sell the same number of mattress/sets for). Because of the relatively high elasticity of demand, sales are likely to decrease in the short-run. In the long-run, the demand curve is less elastic, and therefore the equilibrium price and quantity (sales) will be higher than the short-run price and quantity.

Given the availability of mattresses whose retail prices will not increase and the competitive nature of the industry, it is possible that, on average, prices will rise by about twice the costs associated with the standard (*i.e.*, retail price mark-up will average about twice the increase in manufacturing costs). Under this assumption, consumers would pay an additional $22.91 ($11.46 × 2) to $79.69 ($39.85 × 2) per mattress/set (compared to the price they would have paid for a current mattress that does not comply with the proposed standard.[8] Assuming that the demand curve for mattresses is unaffected by the draft proposed standard, some consumers will choose not to purchase (or at least delay the purchase of) a new mattress/set. These consumers who delay or choose not to purchase a new set will not be getting the value (or benefits) that they would have gained from purchasing a new set. This loss, though difficult to quantify, is sometimes measured as a loss in consumer surplus (McCloskey, 1982).

It is unlikely, however, that the post-standard demand curve for mattresses will be the same as the current demand. Early 2004 market observations indicate consumer and retail enthusiasm about the fire resistant mattresses already available for sale (Furniture Today, April 26th, 2004.) If this enthusiasm generally reflects consumers' preferences, then the demand for mattresses may increase. This would tend to offset any reduction in mattress sales and possible losses in consumer surplus.

[8] These cost figures include labor and material costs; testing costs; record-keeping costs; and quality assurance program costs. They do not include the costs to wholesalers, distributors, and retailers or compliance costs because they are not incurred by the manufacturers.

Impact on Small Businesses and Other Small Entities. The increase in material and labor costs to meet the proposed standard is not likely to be dependent on a firm's size and will therefore not disproportionately affect small businesses. The cost imposed disproportionately (per unit produced) on small businesses will be the cost of testing, information collection and record keeping and quality control/quality assurance programs. While these costs are estimated to be a little over one dollar per mattress per year for average-sized establishments, they could be substantially higher for small mattress manufacturers. The proposed rule includes measures that these manufacturers can use to minimize the testing burden. Furthermore, firms with more than one establishment, or different firms, may be able to reduce these costs by pooling their testing and quality control programs over all establishments or firms.

Use of pooling across establishments and firms would ameliorate the impact of the proposed standard on small businesses. By getting together across different states and regions, small manufacturers who do not share a common market (and therefore do not compete with each other) can resemble a large producer in their testing and quality control/quality assurance efforts and therefore reduce their costs per mattress. It is also expected that some barrier suppliers would be willing to do the testing and quality control/assurance programs for small manufacturers in exchange for a small charge, which will be similar to the average cost per mattress for large businesses, because the volume of output will be large.

Impact on the Environment. The extraction, processing, refinement, and conversion of raw materials to meet the proposed standard involve energy consumption, labor, and the use of potentially toxic chemicals. Most manufacturing has some impact on the environment, and manufacturing fire resistant mattresses is no exception. Because the proposed standard is a performance standard, it does not restrict manufacturers' choice of fire resistant materials and methods that could be used in the production of mattresses. There appear to be several economically viable options to meet the standard that, based on available information, do not impose health risks to consumers or significantly affect the environment. (See discussion at Section N of this preamble.)

Impact on Children. Deaths and injuries among children constitute a substantial proportion of mattress-

related fire losses, and of the potential benefits of the proposed standard. A CPSC staff report, based on a field investigation study in 1995 to learn more about cigarette-ignited fires and open-flame fires, found that 70 percent of open-flame fires involved child play and that child play was involved in 83 percent of the 150 deaths of children less than five years of age. A National Association of State Fire Marshals 1997 study also indicated that 66 percent of the small open-flame ignitions were reportedly started by children under the age of 15 (21 percent by children under 5).

For virtually all of the fires started by children less than 15 years of age, the ignition was not witnessed by an adult (Boudreault and Smith, 1997). Reducing the likelihood of flashover in the first 30 minutes of the fire may therefore benefit children disproportionately, as it allows enough time for adults to detect the fire and save young children in close proximity to the fire. Also children between 5 and 9 who sometimes do not cooperate with adults and run away from adults to other parts of the occupancy will have enough time to be found and rescued by an adult.

The Epidemiology staff's memorandum shows that, based on national fire estimates for the years 1995–1999, children younger than 15 accounted for 27 percent of addressable deaths and 23 percent of addressable injuries. They also indicate that the proposed standard would reduce deaths and injuries to children ages 5 and younger by 85 to 92 percent and 80 to 87 percent respectively. Deaths and injuries to children ages 5 to 14 were estimated to be reduced by 94 to 97 percent and 88 to 94 percent respectively. This represents a total of 100 to 110 deaths of children less than 15 years of age per year for the 1995–1999 period. It also represents 410 to 440 injuries to children less than 15 years of age for the same period.

9. Alternatives to the Proposed Standard Alternative Maximum Peak Heat Release Rate (PHRR) and Test Duration.

The initial California TB 603 proposal required the duration of the test to last 60 minutes with a maximum PHRR of 150kW. After receiving comments on this proposal, the California Bureau of Home Furnishings and Thermal Insulation changed the criterion to a maximum of 200 kW PHRR in the first 30 minutes, the requirement for both the federal proposed standard and the current TB 603.

Increasing the duration of the test and reducing the PHRR would, according to several input suppliers, increase the resource costs to manufacturers of a queen mattress/foundation set by $15.06 to $50.65 compared to non-complying products (*i.e.*, those not conforming to the proposed standard.)[9] Adding the costs to wholesalers, distributors, and retailers, the costs of testing, quality control/assurance programs, record-keeping, and CPSC compliance efforts, yields a total resource cost of the stricter standard (150 kW and 60 minutes) of $16.59 to $55.74 (costs to manufacturers {$15.06 to $50.65} + cost to wholesalers, distributors, and retailers, equal to 10% of costs to manufacturers {$1.51 to $5.06} + 3.2 cents CPSC compliance costs) per mattress. This represents a marginal increase in costs of $3.96 ($16.59 − $12.63) to $11.88 ($55.74 − $43.86) over the costs associated with the proposed standard.[10]

Such increase in costs would likely result in consumers facing higher mattress prices. Based on traditional industry mark-ups, the new price may reflect a two- to four-fold increase over the increase in production costs, depending on the relative elasticity of demand and supply for mattresses. This yields a total increase in the average price of a queen mattress/set of $30.11 (2 × $15.06) to $202.58 (4 × $50.65). Potential benefits of the stricter standard could be higher than the proposed standard, but the extent is uncertain. Given an effectiveness rate of greater than 80 percent of the proposed standard, the additional benefits of stricter test requirements are limited. Assuming that the stricter standard could eliminate 50 percent of the remaining deaths and injuries (*i.e.*, it could save 39 additional lives and prevent 136 additional injuries), then an additional benefit of about $7.66 per mattress would be expected. This additional benefit, however, would come with additional costs (discussed above) and therefore may reduce net benefits. Moreover, a small increase in net benefits may not justify the large increase in retail price that would result from a stricter standard.

A bedding official estimated that such price increases may result in reduction in sales of 25 percent or more (Furniture/Today, July 21, 2004). The larger increase in prices (compared to the less strict test requirements) and the resulting reduction in sales could drive some of the smaller manufacturers out of business. (The stricter standard is more likely to require replacing some existing machines to accommodate the denser barrier material, which would be disproportionately more costly for smaller firms whose machinery is older and less sophisticated.) Since mattresses are durable goods, one would expect a larger drop in sales in the short-run, as consumers choose to keep their old mattresses longer than before. This would make the reduction in sales more pronounced in the short-run, increasing the likelihood that some firms may exit the market. Moreover, if a large number of consumers choose to extend the life of their mattresses for a longer time period, it will take longer to achieve the benefits expected to be associated with the safer mattresses.

Alternative Total Heat Released in the First Part of the Test. TB 603 limits the total heat released during the first 10 minutes of the test to 25 MJ. The proposed standard's stricter limit (15 MJ in the first 10 minutes) reduces the expected size of the initial fire and hence allows consumers a greater chance to escape the fire and get out of the room, even if the room never reaches flashover. The effectiveness rates presented in the analysis are based on the stricter criterion. Using the TB 603 criterion (25 MJ in the first 10 minutes) would likely reduce estimated benefits (the estimated reductions in deaths and injuries), without having any significant effect on costs. According to several producers, mattresses that use existing barrier technology release total heat that is far below the 25 MJ requirement of TB 603. Therefore, using the TB 603 criterion for the total heat released would not change costs but could potentially reduce the benefits and, hence, the net benefits of the proposed standard.

Moreover, because of the small fuel load of ticking materials currently being used, the lower total heat release requirement allows the production of mattress/sets based on a prototype that has not been tested so long as it differs from the qualified prototype only with respect to ticking and the ticking material is not part of the fire resistance solution. Requiring a test for every prototype with a different ticking was

[9] The lower end of the range is based on barrier price of one supplier, whose capacity is expected to meet 25 to 30 percent of the whole market demand in the short run. The next cheapest alternative costs $24 for the barrier material alone.

[10] These cost estimates (and the resulting marginal increase) should be viewed as approximate since no extensive tests of the barriers have been conducted for 60 minutes, as most manufacturers are focused on meeting the less strict requirements. Input suppliers generally do not assemble and test large numbers of mattresses, and may therefore underestimate reduced labor productivity and/or reduced output per machine (compared to a maximum PHRR of 200 kW for a 30-minute test) due to handling the thicker denser barrier. A number of mattress producers estimate that to meet the stricter standard, manufacturing costs would increase (over those of non-compliant mattresses) by $50 to $70 for a queen-sized set (Furniture/Today, July 21, 2004).

rejected because of the magnitude of the burden it would impose on small manufacturers who do not produce large numbers of any one prototype and who would have been disproportionately adversely affected by these requirements.

Alternative Testing Requirements. The proposed standard requires prototype testing (of three mattress/sets) before a manufacturer starts production of a given mattress design and a confirmatory test of one mattress if more than one establishment or firm are pooling their results. Manufacturers may sell a mattress/set based on a prototype that has not been tested if that prototype differs from the qualified prototype only with respect to: (1) Mattress/foundation size; (2) ticking, unless the ticking of the qualified prototype has characteristics designed to improve the performance on the burn test; and/or (3) any component, material, or method of construction that the manufacturer can demonstrate on an objectively reasonable basis will not cause the prototype to exceed the test criteria. Though production testing (*i.e.*, random burning of mattress/sets to ensure that all production units meet the standard) is encouraged by the proposed standard under quality assurance program requirements, it is not required. The individual manufacturer's decision on whether to conduct production testing (and if so, at what frequency) will clearly depend on the efficacy of his/her quality assurance/control efforts.

As an alternative, the proposed Federal standard could, like TB 603, omit testing or prototype definition requirements. Without testing, however, it might be difficult for manufacturers to know whether their mattresses will comply with the standard. Alternatively, the standard could require production testing with a specified frequency. This specification, however, could result in unnecessary costs if they are not justified given the quality control measures generally undertaken by manufacturers in the absence of the proposed standard. Requiring more tests per establishment, prototype, or enterprise will increase the estimated costs per mattress and could reduce net benefits.

Alternative Effective Date. The proposed effective date is twelve months from the date of publication of the final rule in the **Federal Register**. Given the length of time needed to ensure the availability of inputs for the production of barrier materials, availability of barriers for mattress producers, and a sufficient volume of inventories at retailers' showrooms, an earlier effective date may result in higher input costs to manufacturers. More importantly, it is expected that smaller manufacturers will be disproportionately affected, as they are more likely to wait to invest in development efforts until the technology is developed by larger firms, or until the proposed standard becomes effective. A later effective date (longer than twelve months) could reduce expected net benefits as more fires, deaths, and injuries associated with mattresses would occur between the date of publication in the **Federal Register** and the date the standard becomes effective. The staff is unaware of evidence that small manufacturers would be negatively impacted by a twelve months period relative to a longer period, such as eighteen or twenty-four months. The Commission is requesting comments from small businesses on the expected economic impact of the effective date and other requirements of the proposed rule (*see* section M of this document below).

Taking No Action or Relying on a Voluntary Standard. If the Commission chose to take no action, California may attempt to enforce its standard despite the Commission General Counsel's position on preemption. Larger producers are already moving to comply with California's standard. They also want to avoid product liability claims associated with selling mattresses with different fire resistance in other areas of the country. Three of the largest four producers plan to meet TB 603 nationwide by the end of 2005. Some small California manufacturers may have a smaller incentive to meet TB 603 than a Federal standard. Small manufacturers who do not sell in California may similarly have no incentive to sell mattresses that meet TB 603 requirements in other parts of the country. Hence, expected aggregate net benefits associated with the draft proposed standard are higher than the net benefits that might result under California TB 603 even if it could be enforced in the face of preemption concerns.

No effort has been undertaken to develop a voluntary standard. Furthermore, industry representatives support a mandatory standard to level the playing field among domestic producers (large and small) and importers. If a voluntary standard were developed, the economic burden would fall primarily on the larger firms (who would likely be the first to comply), their market shares could be reduced and benefits to consumers (in terms of reduced deaths and injuries) would likely decline accordingly.

Labeling Requirements. The Commission could require labeling on mattresses to warn consumers in lieu of a standard. Labeling is not considered an effective option for reducing the risk of fires. Since mattress labels are usually covered by bedclothes and may not be seen by the mattress users, labeling mattresses is likely to be an ineffective means of warning consumers. Moreover, fires started by children who cannot read or do not change the bed sheets will not be reduced by a labeling requirement. Hence, while labeling costs are probably negligible, labels are unlikely to reduce mattress fires.

Labeling of chemically treated components has been suggested as a possible requirement of the draft standard, to inform consumers of the materials used. The costs of such labeling would also be negligible, since existing mattresses have labels and producers could probably add a description of the chemical treatment (if any) to the existing label. Labeling of chemically treated components could provide small unquantifiable benefits to consumers as it would provide some additional information. However, because a label would only provide the name of any chemical treatment without any information about whether the treatment has any potential health effects, it would be of little practical use for the consumer. Information on the use of chemically treated components is, however, required as part of the record keeping requirements of the standard.

L. Paperwork Reduction Act

The proposed standard will require manufacturers (including importers) of mattresses/sets to perform testing and maintain records of their testing and quality assurance efforts. For this reason, the rule proposed below contains ''collection of information requirements,'' as that term is used in the Paperwork Reduction Act, 44 U.S.C. 3501–3520. Therefore, the proposed rule is being submitted to the Office of Management and Budget (''OMB'') in accordance with 44 U.S.C. 3507(d) and implementing regulations codified at 5 CFR 1320.11. The estimated costs of these requirements are discussed below.

Costs of Prototype and Confirmation Testing. According to industry representatives, the cost of testing per twin-size mattress/set may be about $500: the sum of the average cost of the materials and shipping ($100) and the cost of the use of the lab ($400). Hence, the cost for testing three specimens as required by the proposed rule mattresses equals $1500. This cost is assumed to be incurred no more than

once per establishment for each prototype. If manufacturers test every mattress construction (*e.g.*, single-sided pillow top, double-sided pillow-top, tight-top, euro-top, * * * etc.), which is estimated, based on conversations with manufacturers, to average about 20 per manufacturer, for every establishment in a given year, then the estimated industry testing cost per establishment per year would approximately equal $30,000. The total number of establishments producing conventional mattresses in 2001 was 639. Using an estimated number of 739 producers of both conventional and unconventional mattresses, the annual cost to all (conventional and unconventional) mattress producers is $22.17 million.

Cost of information collection and recordkeeping. In addition to prototype testing, the proposed standard will require detailed documentation of prototype identification and testing records, model and prototype specifications, inputs used, name and location of suppliers, and confirmation test record, if establishments choose to pool a prototype. This documentation is in addition to documentation already conducted by mattress manufacturers in their efforts to meet the cigarette standard. Detailed testing documentation will be done by the test lab and is included in the estimated cost of testing. Based on CPSC Office of Compliance staff estimates, all requirements of the proposed standard are expected to cost an establishment about 110 minutes, or 1.3 hours, per qualified prototype. Assuming that every establishment will produce 20 different qualified prototypes, the increase in record keeping costs is about $935 (110 minutes × 20 prototypes × $25.50 in average civilian workers' compensation per hour) per establishment per year. (Note that pooling among establishments or using a prototype qualification for longer than one year will reduce this estimate.) This translates to an annual cost to all (conventional and unconventional) mattress producers of $690,965 ($935 × 739).

Cost of quality control/quality assurance programs. To ensure that all mattresses are produced to the prototype specification across all factories and over the years for which a production line exists, mattress manufacturers will need a thorough well-documented quality control/assurance program. The top 12 mattress producers (with a market share of almost 80 percent) have a existing quality control programs which could be modified to fit the new standard with minimal additional costs. Smaller producers, whose quality control program is less detailed or non-existent, will incur some incremental costs as a result of the proposed standard. These incremental costs will be small for each manufacturer and less when measured per mattress. (See the section on impact of the proposed standard on small businesses for a description of their cost of quality control and quality assurance programs.)

Additionally, the proposed standard encourages random production testing to assure manufacturers that their mattresses continue to meet the requirements of the rule. Assuming that an average of 3 mattress/set constructions will be tested per establishment per year yields an estimated cost of production testing of about $1500. The labor needed to meet the quality assurance measures required by the standard is estimated by CPSC Office of Compliance staff to be 224 minutes per establishment per qualified prototype per year. Assuming that every establishment will produce twenty different qualified prototypes, the increase in labor costs associated with quality assurance requirements of the draft proposed standard is about $1904 (224 minutes × 20 qualified prototypes × $25.50 average civilian workers' compensation per hour) per establishment per year. Hence total costs of quality assurance/quality control programs may average about $3,404 ($1500+1904) per establishment per year. This translates to an annual cost to all (conventional and unconventional) mattress producers of $2,515,556 ($3,404 × 739).

M. Initial Regulatory Flexibility Analysis

1. Introduction

The Regulatory Flexibility Act (''RFA'') generally requires that agencies review proposed rules for their potential economic impact on small entities, including small businesses. Section 603 of the RFA calls for agencies to prepare and make available for public comment an initial regulatory flexibility analysis describing the impact of the proposed rule on small entities and identifying impact-reducing alternatives. Accordingly, staff prepared an initial regulatory flexibility analysis for the mattress proposed rule. [9] A summary of that analysis follows.

2. Impact on Small Businesses and Other Small Entities

Summary of proposed requirements. The proposed standard will apply to all mattresses and mattress and foundation sets, as discussed earlier in this document (see section G.2. above). Options that manufacturers may choose in order to meet the proposed standard include one or a combination of the following: fire resistant ticking; chemically treated or otherwise fire resistant filling products; or a fire blocking barrier (either a sheet style barrier or a high-loft barrier, sometimes called a fiber barrier).

For each qualified prototype, three mattresses/sets must be tested and must pass the test requirements. To obtain a passing result, each mattress/set must pass a 30 minute test, where the PHRR does not exceed 200 kW and the total heat release does not exceed 15 MJ in the first 10 minutes of the test. A failure of any of the sets would require that the problem be corrected and the prototype be retested and pass the test (in triplicate). Manufacturers may sell any mattress/foundation set based on a qualified prototype. Manufacturers may also sell a mattress/set based on a prototype that has not been tested if that prototype differs from a qualified prototype only with respect to (1) mattress/foundation size; (2) ticking, unless the ticking of the qualified prototype has characteristics designed to improve performance on the burn test; and/or (3) any component, material, or method of construction that the manufacturer can demonstrate, based on an objectively reasonable basis, will not cause the prototype to exceed the test criteria specified above.

If one or more establishments (plants within the same firm) or independent firms choose to ''pool'' prototypes, then each pooling plant or firm is required to conduct a confirmation test for one mattress/set it produces locally. If that set fails, then its producer cannot sell mattresses based on that prototype unless it successfully tests another mattress/set after correcting its production to make sure that it is identical to the original prototype. A pooling firm may sell other mattresses that have not been tested by the pooling firm if they differ from the pooled prototype only with respect to (1) mattress/foundation size; (2) ticking, unless the ticking of the qualified prototype has characteristics designed to improve performance on the burn test; and/or (3) any component, material, or method of construction that the manufacturer can demonstrate, based on an objectively reasonable basis, will not cause the prototype to exceed the test criteria specified above.

Manufacturers are required to keep records of all tests performed and their results, including video or pictures, prototype identification number, date and time of test, name and location or

testing facility for as long as the prototype is in production and for three years after its production ceases. Manufacturers are also required to keep records of a unique identification number for the qualified prototype and a list of the unique identification numbers of all other prototypes based on the qualified prototype, together with a description of the material substituted and/or size change. Moreover, they are required to document the name and supplier of each material used in construction and keep physical samples of the material. Additionally, they are required to identify the details of the application of any flame retardant treatments and/or inherently flame retardant fibers employed relative to mattress components. Finally, they are required to have an adequate quality assurance program in place.

Impact on small businesses. The proposed standard covers manufacturers and importers of mattresses. There were 557 mattress firms and 639 mattress establishments in 2001, according to the Statistics of U.S. businesses, Census Bureau data. All but the largest twelve firms had less than 500 employees. The U.S. Small Business Administration's Office of Advocacy defines a small business as one that is independently owned and operated and not dominant in its fields. A definition that is used frequently and is less subject to interpretation is a firm with fewer than 500 employees. The latter definition classifies 97.8 percent ((557 − 12)/557) of all mattress firms as small businesses.

Average employment per firm for the whole industry is 45.8 employees. Average employment for the 1–4 employees per enterprise group, which represents 22.98 percent of all firms, is 2.4 employees. Average employment for the fewer than twenty employees per enterprise group, which represents 61.22 percent of all firms, is 6.2 employees. Hence more than half of mattress firms have fewer than twenty employees.

In addition to domestic producers, importers will be affected by the proposed standard. Imported mattresses represent less than two percent of total U.S. shipments.

The increase in material and labor costs of the proposed standard (estimated to be $10.41 to $38.80 per mattress) is not likely to be dependent on a firm's size and will therefore not adversely affect small businesses. Larger firms are bearing all the capital investment costs of research and development, sharing some of these costs with input suppliers. Most smaller firms are waiting to buy from the suppliers a barrier solution, which has been tested extensively and is known to meet the standard. The price smaller firms pay to cover the development and testing costs borne by the supplier will not disproportionately impact them, because it is not measured relative to their small output, but relative to the supplier's output. Other smaller firms may combine their development efforts to be able to benefit from dividing the costs over a larger number of firms. Finally, small mattress producers who do not assemble the mattress panels, but buy them from a panel supplier are effectively acting as a large producer by combining all their output. This is because the panel supplier will be responsible for including a barrier in the panel assembly and will pass that cost on to the mattress producers, again not disproportionately impacting the small producers who buy the already assembled panels.

The cost imposed disproportionately (per unit produced) on small businesses will be the cost of testing, information collection and record keeping, and quality control/quality assurance programs. While the regulatory analysis estimates these costs to be a little over one dollar per mattress per year for average-sized establishments, they could be substantially higher for small mattress producers. If manufacturers use a prototype qualification to produce mattress/set constructions for longer than a year, or if they use a worst-case prototype to represent other mattress constructions, these costs will be lower. Furthermore, firms with more than one establishment may be able to reduce these costs by pooling their testing and quality control programs over all establishments. Small independent firms could also pool their testing to reduce their costs per mattress.

Use of pooling across establishments and firms would ameliorate the impact of the proposed standard on small businesses. By getting together across different states and regions, small manufacturers who do not share a common market (and therefore do not compete with each other) can resemble a large manufacturer in their testing and quality control/quality assurance efforts and therefore reduce their costs per mattress. It is also expected that some barrier suppliers would be willing to do the testing and quality control/assurance programs for small manufacturers in exchange for a small charge, which will be similar to the average cost per mattress for large businesses, because the volume of output will be large.

3. Alternatives and Their Possible Effect on Small Businesses

Alternatives considered by the Commission are discussed in the Preliminary Regulatory Analysis section of this preamble (Section K). As discussed therein, increasing the duration of the test and reducing the PHRR would increase costs without necessarily increasing benefits. This would necessitate an increase in costs. Staff estimates the marginal increase in costs to be $3.96 to $11.88 over the costs of the proposed standard. Although a stricter standard might increase benefits, any increase is likely to be small since the proposed standard has an effectiveness rate of 80 percent.

An increase in costs would likely result in an increase in mattress prices. A bedding official estimated that such price increases may result in reduction in sales of 25% or more (Furniture/Today, July 21, 2004). The larger increase in prices (compared to the less strict test) and the resulting reduction in sales could drive some of the smaller producers out of business. (A stricter standard would be more likely to require replacing some existing machines, to accommodate the denser barrier material, which would be disproportionately more costly for smaller firms, whose machinery is older and less sophisticated.) Since mattresses are durable goods, one would expect a larger drop in sales in the short-run than in the long-run, as consumers choose to keep their old mattresses longer than before. This would make the reduction in sales more pronounced in the short-run, increasing the likelihood that some firms may exit the market. Moreover, if a large number of consumers choose to extend the life of their mattresses for a longer time period, it will take longer to achieve the benefits expected to be associated with the safer mattresses.

As discussed in the preliminary regulatory analysis, the Commission also considered a different criterion for the total heat released during the first 10 minutes of the test, *i.e.*, 25 MJ instead of the 15 MJ the Commission is proposing. Using the 25 MJ criterion would likely reduce estimated benefits (the estimated reductions in deaths and injuries), without having any significant effect on costs. According to several producers, mattresses that use existing barrier technology release total heat that is far below the 25 MJ level.

Moreover, because of the small fuel load of ticking materials currently being used, the lower total heat release requirement allows the production of mattress/sets based on a prototype that has not been tested so long as it differs

from the qualified prototype only with respect to ticking and the ticking is not part of the fire resistance solution. Requiring a test for every prototype with a different ticking was rejected because of the magnitude of the burden it would impose on small producers who do not produce large numbers of any one prototype and would have been adversely affected by these requirements.

The Commission also considered alternative testing requirements. The proposed standard requires prototype testing (of three specimens of mattress/sets) before a manufacturer starts production of a given mattress design and a confirmatory test of one mattress if a firm is producing a mattress based on a prototype produced by another manufacturer in a pooling arrangement. Although production testing (*i.e.* burning mattress/sets to ensure that production units meet the standard) is encouraged by the proposed standard under quality assurance program requirements, it is not required. The individual manufacturer's decision on the need for and frequency of production testing will clearly depend on the efficacy of its quality assurance/control efforts.

As an alternative, the Federal standard could, like TB 603, omit testing requirements. However, without testing, it might be difficult for manufacturers to know whether their mattresses will comply with the standard. Alternatively, the standard could require production testing with a specified frequency. This specification, however, could result in unnecessary costs if they are not justified given the quality control measures generally undertaken by producers in the absence of the proposed standard. Requiring more tests per establishment, prototype, or enterprise will increase the estimated costs per mattress and could reduce net benefits.

The Commission also could have chosen to take no action. In this situation, the larger producers would probably follow TB 603 for all their mattresses, not just those sold in California, in order to avoid product liability claims. Some small California manufacturers may decline to meet TB 603 on the basis that it is preempted by the existing federal standard. Small manufacturers who do not sell in California may have no incentive to meet TB 603 requirements throughout the country. Hence, expected aggregate net benefits associated with the draft proposed standard are higher than the net benefits that might result under California TB 603.

Another possible option would be to require labeling on mattresses to warn consumers in lieu of a standard. However, as discussed in the Preliminary Regulatory Analysis, labeling is not likely to be effective at reducing mattress-related deaths and injuries.

A final possible option might be to set a later effective date for small companies. If needed, this could allow smaller companies more time to prepare for the standard since they are less likely to be currently preparing for California's similar TB 603. However, the Commission has no evidence at this time that a split effective date is necessary.

4. Conclusion

Almost all mattress firms would be considered small businesses, using the Small Business Administration definition. Material and labor costs for all firms are expected to initially increase on average by $10–$39 dollars per mattress set produced. These cost increases are expected to be borne equally by all firms and hence do not have an adverse impact on the smaller mattress producers. These costs are expected to decline in the future due to improved technology of producing fire retardant materials and increase competition among input suppliers.

Although testing and recordkeeping requirements may have a disproportionate impact on small manufacturers, the proposed standard allows manufacturers to pool test results, to vary their tickings without new prototype testing (unless the ticking had characteristics designed to improve performance on the specified mattress test), and to make other changes in their prototype without new prototype testing if the change does not negatively effect the mattress's ability to meet the test criteria. These options should minimize burdens on small businesses.

The Commission requests comments on any or all of the provisions in the proposed rule with regard to : (1) The impact of the provisions (including any benefits and costs), if any, on small entities and (2) what alternatives, if any, the Commission should consider, as well as the costs and benefits of those alternatives to small entities in light of the above analysis. The Commission is particularly interested in information with regard to the impact of the following aspects of the proposed rule:

- Prototype and confirmation testing requirements
- Quality Control/quality assurance program requirements
- Recordkeeping requirements
- Twelve month effective date

Also, it would be most useful to receive comments on ways in which the proposal could be modified to reduce any costs or burdens for small entities, and whether and how technological developments could reduce the costs for small entities of complying with the rule.

N. Environmental Considerations

General. Usually, CPSC rules establishing performance requirements are considered to ''have little or no potential for affecting the human environment,'' and environmental assessments are not usually prepared for these rules (*see* 16 CFR 1021.5 (c)(1)). However, in order to meet this standard, many manufacturers will need to change some materials that they use to manufacture mattresses: either using more inherently flame resistant materials or incorporating flame retardant (FR) chemicals into their products. Therefore, the Commission concluded that a more thorough consideration of the potential for environmental impacts is warranted.

The staff's analysis contained in the memorandum ''Preliminary Environmental Assessment of a Draft Proposed Open-Flame Ignition Resistance Standard for Mattresses,'' [7] concludes that since the proposed standard states performance requirements, manufacturers will have several options for meeting the requirements of the proposed standard. Although there are still some unsettled questions, there appear to be numerous promising methods that manufacturers could use without posing an unacceptable health risk to consumers or significantly affecting the environment. Moreover, even if a chemical used by some manufacturers were shown to pose an unacceptable risk to human health or the environment, there would be various regulatory and other mechanisms that could be used to remove the chemical from applications where it poses a risk.

Possible approaches to meet the proposed standard. The standard does not prescribe the means that manufacturers must use to meet the standard. The staff expects, however, that most manufacturers will use some kind of flame resistant barrier to protect the mattress components with the greatest combustible fuel loads from the flames. These barriers may be fabric, batting, or other materials that are either inherently flame resistant or that have been treated with flame retardant chemicals. [6&7]

Because manufacturers are now evaluating their alternatives, the staff

does not know the methods that each manufacturer will use to meet the proposed standard. Therefore, the staff's analysis attempts to provide some context for considering the environmental impacts of the standard. More definitive conclusions should be possible as more information concerning the methods that manufacturers will use to meet the standard becomes available.

How the proposed standard could affect the environment. About 25 million mattresses are sold annually, and most will probably require some changes in materials used or construction to meet the standard. These changes, such as the incorporation of a flame resistant barrier or other materials, will increase the manufacture of fire resistant materials or FR chemicals. This could mean increased exposure to such chemicals for workers and consumers. Additionally, at the end of their useful lives, the mattresses/sets will be disposed of. Potential environmental impacts will vary depending on the method the manufacturer used to meet the standard and the potential for the particular FR chemicals used to persist in the environment. [7]

FR chemicals widely in use, but new applications possible. Many FR chemicals are widely used. In the U.S., the consumption of flame retardant chemicals is estimated to be over 1 billion pounds annually and is increasing. This includes various fire retardant chemicals based on bromine, antimony, chlorine, phosphorous, nitrogen, and boron. Additionally, there are some fibers where the FR chemical is incorporated into the polymer of the fiber itself or that are inherently fire resistant. These include some modacrylic, melamine, and para-aramid fibers.

Because the chemicals and materials that would be used to meet a mattress standard are already being used in other applications, the manufacture of these materials will not create new impacts, though it could intensify effects that are already occurring. A mattress flammability standard could result in some FR chemicals or flame resistant materials being used in applications where they have not been used before. This would result in some new exposure patterns for these materials. For example, workers in mattress factories could be exposed to the chemicals as could the ultimate consumers. However, these new exposure patterns may be similar to ones that are already occurring since these chemicals are widely used in other applications. For example, workers involved in manufacturing protective apparel, carpets, and transportation upholstery may already be exposed to these chemicals as are the consumers of the products. Some of these FR chemicals and materials may already be used in mattress and bedding applications. For example, boric acid is already used to treat cotton batting in mattresses and futons. [6&7]

Possible regulatory protections. Some chemicals that have been used for their fire resistant properties have been determined to have unacceptable adverse impacts on health and the environment in some applications (*e.g.*, TRIS (2,3,-dibromopropyl) phosphate, pentabromodiphenyl oxide (''PBDPO'') and octabromodiphenyl oxide (''BDPO'')). [7]

The U.S. Environmental Protection Agency (EPA) has the authority to regulate the use of toxic chemicals under the Toxic Substances Control Act (TSCA) (15 U.S.C. 2601 *et seq.*). EPA also monitors and promotes research into potential toxic or environmental effects of chemicals which it believes could pose environmental risks. With regard to flame retardants, the EPA is developing a significant new use rule (SNUR), under section 5(a)(2) of TSCA, which is expected to cover the use of several flame retardants in residential upholstered furniture. A SNUR would require chemical manufacturers and importers to report scientific data to the EPA so that EPA may determine whether controls on the use of the chemical may be warranted. There is expected to be some overlap between the flame retardants that will be covered by the SNUR for use in upholstered furniture and flame retardants that can be used in mattresses. Decabromodiphenyl oxide (DBDPO), for example, can be used as a backcoating in upholstery fabric or on fire resistant barriers for mattresses. Additional activities by EPA, The National Toxicology Program (NTP) of the Department of Health and Human Services (DHHS), and the Occupational Safety and Health Administration (OSHA) can provide information about any adverse health effects of FR chemicals and take actions to limit their use if necessary. [6&7] Work by the National Research Council of the National Academy of Sciences on selected flame-retardant chemicals is an additional source of information on these FR chemicals. [16]

Conclusion. The staff's environmental analysis examines some of the methods manufacturers might use to meet the proposed standard and discusses what is known about their potential toxicity and possible environmental impact. The analysis concludes that there are FR chemicals and flame resistant materials that, based on currently available data, are not expected to pose unacceptable risks to the environment and that are widely used in other applications. [7]

In accordance with the National Environmental Policy Act (''NEPA''), the Executive Director of CPSC has issued a Finding of No Significant Impact (''FONSI'') for the proposed mattress standard. The FONSI is based on the staff's Environmental Assessment, which has been summarized above. The FONSI concludes that there will be no significant impacts on the quality of the human environment as a result of the proposed mattress flammability standard. The Commission requests comments on both the Environmental Assessment and the FONSI.[11]

O. Executive Order 12988

According to Executive Order 12988 (February 5, 1996), agencies must state the preemptive effect, if any, of new regulations.

The FFA provides that, generally, if the Commission issues a flammability standard for a fabric, related material or product under the FFA, ''no State or political subdivision of a State may establish or continue in effect a flammability standard or other regulation for such fabric, related material or product if the standard or other regulation is designed to protect against the same risk of the occurrence of fire with respect to which the standard or other regulation under this Act is in effect unless the State or political subdivision standard or other regulation is identical to the Federal standard other regulation.'' 15 U.S.C. 1203(a). Upon application to the Commission, a State or political subdivision of a State may be exempted from this preemptive effect if compliance with the State or political subdivision requirement would not cause the fabric, related material or product to be in violation of any FFA standard or regulation, and the State or political subdivision's standard (1) provides a significantly higher degree of protection from the risk of occurrence of fire than the FFA standard and (2) does not unduly burden interstate commerce. Id. 1203(c)(1). In addition, the Federal government, or a State or local government, may establish and continue in effect a non-identical flammability standard or other regulation for the

[11] Both of these documents are available from the Commission's Office of the Secretary (*see* ''Addresses'' section above) or from the Commission's web site (*http://www.cpsc.gov/library/foia/foia.html*).

Federal, State or local government's own use if it provides a higher degree of protection than the FFA standard. Id. 1203(b). Thus, with the exceptions noted above, the proposed open flame standard for mattresses would preempt non-identical state or local mattress flammability standards designed to protect against the same risk of the occurrence of fire.

The issue of preemption has been raised with regard to the proposed standard because of California's TB 603. In a letter to the Bureau Chief of California's Bureau of Home Furnishings and Thermal Insulation, dated April 9, 2003, the Commission's General Counsel has taken the position that CPSC's existing federal Standard for the Flammability of Mattresses (16 CFR 1632) preempts California's TB 603. That conclusion was based on legislative history and CPSC's General Counsel Advisory Opinion 289 (Dec. 8, 1983) indicating that if federal and state requirements are both designed to address the same risk (*i.e.*, the occurrence of fire), the federal standard will have preemptive effect even if the two standards use different ignition sources.

Legislative history of the FFA's preemption provision states:

> [A] State standard designed to protect against the risk of injury from a fabric catching on fire would be preempted by a Federal flammability standard covering the same fabric even though the Federal flammability standard called for tests using matches and the State standard called for tests using cigarettes. When an item is covered by a Federal flammability standard, * * * a different State or local flammability requirement applicable to the same item will be preempted since both are designed to protect against the same risk, that is the occurrence of or injury from fire.

H.R. Rep. No. 1022, 94th Cong., 2d Sess. 29 (1976). The Commission believes that this legislative history indicates that the proposed standard would preempt non-identical state requirements addressing the flammability of mattresses.

P. Effective Date

The Commission proposes that the rule would become effective one year from publication of a final rule in the **Federal Register** and would apply to mattresses entering the chain of distribution on or after that date. The Commission is aware that many mattress manufacturers are modifying their products to comply with California's TB 603 which prescribes requirements that are similar to this proposed rule and will become effective January 1, 2005. Thus, the Commission believes that a one-year effective date should allow sufficient time for manufacturers to develop products for nationwide markets that will meet the proposed requirements. The Commission requests comments, especially from small businesses on the proposed effective date and the impact it would have on them.

Q. Proposed Findings

Section 1193(a) and (j)(2) of the FFA require the Commission to make certain findings when it issues a flammability standard. The Commission must find that the standard: (1) Is needed to adequately protect the public against the risk of the occurrence of fire leading to death, injury or significant property damage; (2) is reasonable, technologically practicable, and appropriate; (3) is limited to fabrics, related materials or products which present unreasonable risks; and (4) is stated in objective terms. Id. 1193(b). In addition, the Commission must find that: (1) If an applicable voluntary standard has been adopted and implemented, that compliance with the voluntary standard is not likely to adequately reduce the risk of injury, or compliance with the voluntary standard is not likely to be substantial; (2) that benefits expected from the regulation bear a reasonable relationship to its costs; and (3) that the regulation imposes the least burdensome requirement that would prevent or adequately reduce the risk of injury. The last three findings must be included in the regulation. Id. 1193(j)(2). These findings are discussed below.

The standard is needed to adequately protect the public against unreasonable risk of the occurrence of fire. National fire loss estimates indicate that mattresses and bedding were the first items to ignite in 19,400 residential fires attended by the fire service annually during 1995–1999. These fires resulted in 440 deaths, 2,230 injuries and $273.9 million in property loss each year. Of these, the staff considers an estimated 18,500 fires, 440 deaths, 2,160 injuries, and $259.5 million property loss annually to be addressable by the proposed standard. The Commission estimates that the standard will prevent 80 to 86 percent of deaths and 86 to 92 percent of the injuries occurring with these addressable mattress/bedding fires. Thus, the Commission estimates that when all mattresses have been replaced by ones that comply with the standard, 310 to 330 deaths and 1,660 to 1,780 injuries will be avoided annually as a result of the standard.

The regulatory analysis explains that the Commission estimates lifetime net benefits of $18 to $62 per mattress or aggregate lifetime net benefits for all mattresses produced in the first year of the standard of $450 to $1,560 million from the standard. Thus, the Commission preliminarily finds that the standard is needed to adequately protect the public from the unreasonable risk of the occurrence of fire.

The standard is reasonable, technologically practicable, and appropriate. Through extensive research and testing, NIST developed a test method to assess the flammability of mattresses ignited by an open flame. The test method represents the typical scenario of burning bedclothes igniting a mattress. Based on NIST's testing, the standard establishes criteria that will reduce the fire intensity of a burning mattress, allowing more time for occupants to escape before flashover occurs. NIST testing has also demonstrated that mattresses can be constructed with available materials and construction that will meet the test criteria. Therefore, the Commission finds that the standard is reasonable, technologically practicable, and appropriate.

The standard is limited to fabrics, related materials, and products that present an unreasonable risk. The standard applies to mattresses and mattress and foundation sets. It is a performance standard. Thus, it neither requires nor restricts the use of particular fabrics, related materials or products. Manufacturers may choose the materials and methods of construction that they believe will best suit their business and result in mattresses that can meet the specified test criteria. As discussed above, the Commission concludes that current mattresses present an unreasonable risk. Therefore, the Commission finds that the standard is limited to fabrics, related materials, and products that present an unreasonable risk.

Voluntary standards. The Commission is not aware of any voluntary standard in existence that adequately and appropriately addresses the specific risk of injury addressed by this standard. Thus, no findings concerning compliance with and adequacy of voluntary standards are necessary.

Relationship of Benefits to Costs. The Commission estimates that the total lifetime benefits of a mattress complying with this standard will range from $62 to $74 per mattress (based on a 10 year mattress life and 3% discount rate). The Commission estimates that total resource costs of the standard will range from $13 to $44 per mattress. This yields net benefits of $18 to $62 per mattress. The Commission estimates

that aggregate lifetime benefits associated with all mattresses produced the first year the standard becomes effective range from $1,560 to $1,880 million, and that aggregate resource costs associated with these mattresses range from $320 to $1,110 million, yielding net benefits of about $450 to $1,560 million. Therefore, the Commission finds that the benefits from the regulation bear a reasonable relationship to its costs.

Least burdensome requirement. The Commission considered the following alternatives: alternative maximum peak heat release rate and test duration, alternative total heat released in the first 10 minutes of the test, mandatory production testing, a longer effective date, taking no action, relying on a voluntary standard, and requiring labeling alone. As discussed in the preamble above and the regulatory analysis, these alternatives are expected to increase costs without increasing benefits, or significantly reduce the benefits expected from the rule. Therefore, the Commission finds that the standard imposes the least burdensome requirement that would adequately reduce the risk.

R. Conclusion

For the reasons stated in this preamble, the Commission preliminarily finds that an open flame flammability standard for mattresses and mattress and foundation sets is needed to adequately protect the public against the unreasonable risk of the occurrence of fire leading to death, injury, and significant property damage. The Commission also preliminarily finds that the standard is reasonable, technologically practicable, and appropriate. The Commission further finds that the standard is limited to the fabrics, related materials and products which present such unreasonable risks.

List of Subjects in 16 CFR Part 1633

Consumer protection, Flammable materials, Labeling, Mattresses and mattress pads, Records, Textiles, Warranties.

For the reasons stated in the preamble, the Commission proposes to amend Title 16 of the Code of Federal Regulations by adding a new part 1633 to read as follows:

PART 1633—STANDARD FOR THE FLAMMABILITY (OPEN-FLAME) OF MATTRESSES and MATTRESS AND FOUNDATION SETS

Subpart A—The Standard

Sec.
1633.1 Purpose, scope and applicability.
1633.2 Definitions.
1633.3 General requirements.
1633.4 Prototype testing requirements.
1633.5 Prototype pooling and confirmation testing requirements.
1633.6 Quality assurance requirements.
1633.7 Mattress test procedure.
1633.8 Findings.
1633.9 Glossary of terms.

Subpart B—Rules and Regulations

1633.10 Definitions.
1633.11 Records.
1633.12 Labeling.
1633.13 Tests for guaranty purposes, compliance with this section, and ''one of a kind'' exemption.

Subpart C—Interpretations and Policies

1633.14 Policy clarification on renovation of mattresses.
Figure 1 to Part 1633—Test Assembly, Shown in Furniture Calorimeter (Configuration A)
Figure 2 to Part 1633—Test Arrangement in 3.05m × 3.66m (10 ft × 12 ft) Room (Configuration B)
Figure 3 to Part 1633—Details of Horizontal Burner Head
Figure 4 to Part 1633—Details of Vertical Burner Head
Figure 5 to Part 1633—Details of Burner Stand-off
Figure 6 to Part 1633—Burner Assembly Showing Arms and Pivots (Shoulder Screws), in Relation to, Portable Frame Allowing Burner Height Adjustment
Figure 7 to Part 1633—Elements of Propane Flow Control for Each Burner
Figure 8 to Part 1633—Jig for Setting Mattresses and Foundation Sides in Same Plane
Figure 9 to Part 1633—Burner Placements on Mattress/Foundation
Figure 10 to Part 1633—Jig for Setting Burners at Proper Distances from Mattress/Foundation
Figure 11 to Part 1633—Diagrams for Glossary of Terms
Appendix A to Part 1633—Calibration of Propane Flowmeters
Appendix B to Part 1633—Burner Operation Sequence

Authority: 15 U.S.C. 1193, 1194.

Subpart A—The Standard

§ 1633.1 Purpose, scope, and applicability.

(a) *Purpose.* This Part 1633 establishes flammability requirements that all mattress and mattress and foundation sets must meet before sale or introduction into commerce. The purpose of the standard is to reduce deaths and injuries associated with mattress fires by limiting the size of the fire generated by a mattress or mattress and foundation set during a thirty minute test.

(b) *Scope.* (1) All mattresses and all mattress and foundation sets, as defined in § 1633.2(a) and § 1633.2(b), of any size, manufactured or imported after [the effective date of this standard] are subject to the requirements of the standard.

(2) One-of-a-kind mattresses and foundations may be exempted from testing under this standard in accordance with § 1633.13(c).

(c) *Applicability.* The requirements of this part 1633 shall apply to each ''manufacturer'' (as that term is defined in § 1633.2(i)) of mattresses and/or mattress and foundation sets which are manufactured for sale in commerce.

§ 1633.2 Definitions.

In addition to the definitions given in section 2 of the Flammable Fabrics Act as amended (15 U.S.C. 1191), the following definitions apply for purposes of this part 1633.

(a) *Mattress* means a resilient material or combination of materials enclosed by a ticking (used alone or in combination with other products) intended or promoted for sleeping upon.

(1) This term includes, but is not limited to, adult mattresses, youth mattresses, crib mattresses (including portable crib mattresses), bunk bed mattresses, futons, flip chairs without a permanent back or arms, sleeper chairs, and water beds or air mattresses if they contain upholstery material between the ticking and the mattress core. Mattresses used in or as part of upholstered furniture are also included; examples are convertible sofa bed mattresses, corner group mattresses, day bed mattresses, roll-away bed mattresses, high risers, and trundle bed mattresses. See § 1633.9 Glossary of terms, for definitions of these items.

(2) This term excludes mattress pads, mattress toppers (items with resilient filling, with or without ticking, intended to be used with or on top of a mattress), sleeping bags, pillows, liquid and gaseous filled tickings, such as water beds and air mattresses that contain no upholstery material between the ticking and the mattress core, upholstered furniture which does not contain a mattress, and juvenile product pads such as car bed pads, carriage pads, basket pads, infant carrier and lounge pads, dressing table pads, stroller pads, crib bumpers, and playpen pads. See § 1633.9 Glossary of terms, for definitions of these items.

(b) *Foundation* means a ticking covered structure used to support a mattress or sleep surface. The structure may include constructed frames, foam, box springs, or other materials, used alone or in combination.

(c) *Ticking* means the outermost layer of fabric or related material of a mattress or foundation. It does not include any other layers of fabric or related materials quilted together with, or otherwise

attached to, the outermost layer of fabric or related material.

(d) *Upholstery material* means all material, either loose or attached, between the mattress ticking and the core of a mattress, if a core is present.

(e) *Edge seam* means the seam or border edge of a mattress or foundation that joins the top and/or bottom with the side panels.

(f) *Tape edge* means an edge seam made by using binding tape to encase and finish raw edges.

(g) *Binding tape* means a fabric strip used in the construction of some edge seams.

(h) *Seam thread* means the thread used to form stitches in construction features, seams, and tape edges.

(i) *Manufacturer* means an individual plant or factory at which mattresses and/or mattress and foundation sets are manufactured or assembled. For purposes of this Part 1633, an importer is considered a manufacturer.

(j) *Prototype* means a specific design of mattress and corresponding foundation, if any, which, except as permitted by § 1633.4(b), is the same in all material respects as, and serves as a model for, production units intended to be introduced into commerce.

(k) *Prototype pooling* means a cooperative arrangement whereby one or more manufacturers may rely on a prototype produced by a different manufacturer.

(l) *Production lot* means any quantity of finished mattresses or mattress and foundation sets that are produced in a production interval defined by the manufacturer, and are intended to replicate a specific prototype that complies with this part 1633.

(m) *Confirmation test* means a pre-market test conducted by a manufacturer that is relying on a pooled prototype produced by another manufacturer. A confirmation test must be conducted in accordance with the procedures set forth in § 1633.7 to confirm that the manufacturer can produce a mattress and corresponding foundation, if any, that is identical to the prototype in all material respects.

(n) *Specimen* means a mattress and corresponding foundation, if any, tested under this part.

(o) *Twin size* means any mattress with the dimensions 38 inches (in) (96.5 centimeters (cm)) x 74.5 in. (189.2 cm), all dimensions may vary by ± ½ in. (± 1.3 cm)

(p) *Qualified prototype* means a prototype that has been tested in accordance with § 1633.4(a) and meets the criteria stated in § 1633.3(b).

(q) *Core* means the main support system that may be present in a mattress, such as springs, foam, water bladder, air bladder, or resilient filling.

§ 1633.3 General requirements.

(a) *Summary of test method.* The test method set forth in § 1633.7 measures the flammability (fire test response characteristics) of a mattress specimen by exposing the specimen to a specified flaming ignition source and allowing it to burn freely under well-ventilated, controlled environmental conditions. The flaming ignition source shall be a pair of propane burners. These burners impose differing fluxes for differing times on the top and sides of the specimen. During and after this exposure, measurements shall be made of the time-dependent heat release rate from the specimen, quantifying the energy generated by the fire. The rate of heat release must be measured by means of oxygen consumption calorimetry.

(b) *Test criteria.* When testing the mattress or mattress and foundation set in accordance with the test procedure set forth in § 1633.7, the specimen shall comply with both of the following criteria:

(1) The peak rate of heat release shall not exceed 200 kilowatts (''kW'') at any time within the 30 minute test; and

(2) The total heat release shall not exceed 15 megajoules (''MJ'') for the first 10 minutes of the test. In the interest of safety, the test operator should discontinue the test and record a failure if a fire develops to such a size as to require suppression for the safety of the facility.

(c) *Testing of mattress and corresponding foundation.* Mattresses to be offered for sale with a foundation shall be tested with that foundation. Mattresses to be offered for sale without a foundation shall be tested alone.

(d) *Compliance with this standard.* Each mattress or mattress and foundation set sold or introduced into commerce after [the effective date of this standard] shall meet the test criteria specified in paragraph (b) of this section and otherwise comply with all applicable requirements of this part 1633.

§ 1633.4 Prototype testing requirements.

(a) Except as otherwise provided in paragraph (b) of this section, each manufacturer shall cause three specimens of each prototype to be tested according to § 1633.7 and obtain passing test results according to § 1633.3(b) before selling or introducing into commerce any mattress or mattress and foundation set based on that prototype, unless the manufacturer complies with the prototype pooling and confirmation testing requirements in § 1633.5.

(b) Notwithstanding the requirements of paragraph (a) of this section, a manufacturer may sell or introduce into commerce a mattress or mattress and foundation set based on a prototype that has not been tested according to § 1633.3(b) if that prototype differs from a qualified prototype only with respect to:

(1) Mattress/foundation size (*e.g.*, twin, queen, king);

(2) Ticking, unless the ticking of the qualified prototype has characteristics (such as chemical treatment or special fiber composition) designed to improve performance on the test prescribed in this part; and/or

(3) The manufacturer can demonstrate, on an objectively reasonable basis, that a change in any component, material, or method of construction will not cause the prototype to exceed the test criteria specified in § 1633.3(b).

(c) All tests must be conducted on specimens that are no smaller than a twin size, unless the largest size mattress or mattress and foundation set produced is smaller than a twin size, in which case the largest size must be tested.

(d)(1) If each of the three specimens meets both the criteria specified in § 1633.3(b), the prototype shall be qualified. If any one (1) specimen fails to meet the test criteria of § 1633.3(b), the prototype is not qualified.

(2) Any manufacturer may produce mattresses and foundations, if any, for sale in reliance on prototype tests performed before [the effective date of this Standard], provided that such tests were conducted in accordance with all requirements of this section and § 1633.7 and yielded passing results according to the test criteria of § 1633.3(b).

§ 1633.5 Prototype pooling and confirmation testing requirements.

(a) *Prototype pooling.* One or more manufacturers may rely on a prototype produced by another manufacturer provided that:

(1) The prototype meets the requirements of § 1633.4; and

(2) The mattresses or mattress and foundation sets being produced based on the prototype have components, materials, and methods of construction that are identical in all material respects to the prototype except as otherwise permitted by § 1633.4(b).

(b) *Confirmation testing.* Any manufacturer (''Manufacturer B'') producing mattresses or mattress and foundation sets in reliance on a prototype produced by another manufacturer (''Manufacturer A'') shall

cause to be tested in accordance with § 1633.7 at least one (1) specimen produced by Manufacturer B of each prototype of Manufacturer A upon which said Manufacturer B is relying. The tested specimen must meet the criteria under § 1633.3(b) before Manufacturer B may sell or introduce any mattresses or mattress and foundation sets based on the pooled prototype.

(c) *Confirmation test failure*. (1) If the confirmation test specimen fails to meet the criteria of § 1633.3(b), the manufacturer thereof shall not sell any mattress or mattress and foundation set based on the same prototype until that manufacturer takes corrective measures, tests a new specimen, and the new specimen meets the criteria of § 1633.3(b).

(2) If a confirmation test specimen fails to meet the criteria of § 1633.3(b), the manufacturer thereof must notify the manufacturer of the prototype of the test failure.

§ 1633.6 Quality assurance requirements.

(a) *Quality assurance*. Each manufacturer shall implement a quality assurance program to ensure that mattresses and mattress and foundation sets manufactured for sale are identical in all material respects to the prototype on which they are based. At a minimum these procedures shall include:

(1) Controls, including incoming inspection procedures, of all mattress and mattress and foundation set components and materials to ensure that they are identical in all material respects to those used in the prototype;

(2) Designation of a production lot that is represented by the prototype; and

(3) Inspection of mattresses and mattress and foundation sets produced for sale sufficient to demonstrate that they are identical to the prototype in all material respects.

(b) *Production testing*. Manufacturers are encouraged to conduct, as part of the quality assurance program, random testing of mattresses and mattress and foundation sets being produced for sale according to the requirements of §§ 1633.3 and 1633.7.

(c) *Failure of mattresses produced for sale to meet flammability standard*. (1) *Sale of mattresses and foundations*. If any test performed for quality assurance yields results which indicate that any mattress or mattress and foundation set of a production lot does not meet the criteria of § 1633.3(b), or if a manufacturer obtains test results or other evidence that a component or material or construction/assembly process used could negatively affect the test performance of the mattress as set forth in § 1633.3(b), the manufacturer shall cease production and distribution in commerce of such mattresses and/or mattress and foundation sets until corrective action is taken.

(2) *Corrective actions*. A manufacturer must take corrective action when any mattress or mattress and foundation set is manufactured or imported for sale fails to meet the flammability test criteria set forth in § 1633.3(b).

§ 1633.7 Mattress test procedure.

(a) *Apparatus and test materials* (1) *Calorimetry*. The rate of heat release must be measured by means of oxygen consumption calorimetry. The calibration should follow generally accepted practices for calibration. The calorimetry system shall be calibrated at a minimum of two (2) calibration points, at 75 kW and 200 kW.

(2) *Testroom*. The testroom must have either Test Configuration A or B.

(i) *Test Configuration A*. (an *open calorimeter* (or *furniture calorimeter*)). In this configuration, the specimen to be tested is placed under the center of an open furniture calorimeter. Figure 1 of this part shows the test assembly atop a bedframe and catch surface. The specimen shall be placed under an open hood which captures the entire smoke plume and is instrumented for heat release rate measurements. The area surrounding the test specimen in an open calorimeter layout shall be sufficiently large that there are no heat re-radiation effects from any nearby materials or objects. The air flow to the test specimen should be symmetrical from all sides. The air flow to the calorimeter hood shall be sufficient to ensure that the entire fire plume is captured, even at peak burning. Skirts may be placed on the hood periphery to help assure this plume capture, if necessary, though they must not be of such an excessive length as to cause the incoming flow to disturb the burning process. Skirts must also not heat up to the point that they contribute significant re-radiation to the test specimen. The air supply to the hood shall be sufficient that the fire is not in any way limited or affected by the available air supply. The fire plume should not enter the hood exhaust duct. Brief (seconds) flickers of flame that occupy only a minor fraction of the hood exhaust duct inlet cross-section are not a problem since they do not signify appreciable suppression of flames.

(ii) *Test Configuration B*. The test room shall have dimensions 3.05 meters (m) ± 25 millimeters (mm) by 3.66 m ± 25 mm by 2.44 m ± 25 mm (10 feet (ft) by 12 ft by 8 ft) high. The specimen is placed within the burn room. All smoke exiting from the room is caught by a hood system instrumented for heat release rate measurements. The room shall have no openings permitting air infiltration other than a doorway opening 0.97 m ± 6.4 mm by 2.03 m ± 6.4 mm (38 in by 80 in) located as indicated in Figure 2 of this part and other small openings as necessary to make measurements. Construct the test room of wood or metal studs and line it with fire-rated wallboard or calcium silicate board. Position an exhaust hood outside of the doorway so as to collect all of the combustion gases. There shall be no obstructions in the air supply to the set-up.

(2) *Location of test specimen*. The location of the test specimen is shown in Figure 2 of this part. The angled placement is intended to minimize the interaction of flames on the side surfaces of the test specimen with the room walls. One corner of the test specimen shall be 13 centimeters (cm) to 17 cm from the wall and the other corner shall be 25 cm to 30 cm from the wall. The test room shall contain no other furnishings or combustible materials except for the test specimen.

(3) *Bed frame*. For twin size mattresses, the specimen shall be placed on top of a welded bed frame (1.90 m by 0.99 m by 115 mm high; 75 in by 39 in by 4.5 in high) made from 38 mm (1.5 in) steel angle. The frame shall be completely open under the foundation except for two crosspieces, 25 mm wide (1 in) at the ⅓ length points. If testing a size other than twin, the relationship of the mattress to the frame shall be comparable to that specified in this paragraph.

(4) *Catch pan*. The bed frame feet shall rest on a surface of either calcium silicate board or fiber cement board, 13 mm (0.5 in) thick, 2.11 m by 1.19 m (83 in by 47 in). The board serves as a catch surface for any flaming melt/drip material falling from the bed assembly and may be the location of a pool fire that consumes such materials. This surface must be cleaned between tests to avoid build-up of combustible residues. Lining this surface with aluminum foil to facilitate cleaning is not recommended since this might increase fire intensity via reflected radiation.

(5) *Ignition source*. (i) *General*. The ignition source shall consist of two T-shaped burners as shown in Figures 3 and 4 of this part. One burner impinges flames on the top surface of the mattress. The second burner impinges flames on the side of the mattress and on the side of the foundation. Each of the burners shall be constructed from stainless steel tubing (12.7 mm diameter with 0.89 ± 0.5 mm wall thickness; 0.50

in diameter with 0.035 ± 0.002 in wall). Each burner shall incorporate a stand-off foot to set its distance from the test specimen surface (Figure 5 of this part). Both burners shall be mounted with a mechanical pivot point but the side burner is locked in place to prevent movement about this pivot in normal usage. The top burner, however, is free to rotate about its pivot during a burner exposure and is lightly weighted so as to exert a downward force on the mattress top through its stand-off foot so that the burner follows a receding top surface on the test specimen (Figure 6 of this part). The combination of burner stand-off distance and propane gas flow rate to the burners determines the heat flux they impose on the surface of the test specimen so that both of these parameters are tightly controlled.

(ii) *Top surface burner*. The T head of the top surface burner (horizontal burner, Figure 3 of this part) shall be 305 ± 2 mm (12 ± 0.08 in) long with gas tight plugs in each end. Each side of the T shall contain 17 holes equally spaced over a 135 mm length (8.5 mm ± 0.1 mm apart; 0.333 ± 0.005 in). The holes on each side shall begin 8.5 mm (0.33 in) from the centerline of the burner head. The holes shall be drilled with a #56 drill and are to be 1.17 mm to 1.22 mm (0.046 in to 0.048 in) in diameter. The holes shall be pointed 5° out of the plane of the Figure. This broadens the width of the heat flux profile imposed on the surface of the test specimen.

(iii) *Side surface burner*. The T head of the side surface burner (vertical burner) shall be constructed similarly to the top surface burner, as shown in Figure 4 of this part, except that its overall length shall be 254 ± 2 mm (10 ± 0.08 in). Each side of the burner head shall contain 14 holes spaced evenly over a 110 mm length (8.5 mm ± 0.1 mm apart; 0.333 ± 0.005 in). The holes shall be drilled with a #56 drill and are to be 1.17 mm to 1.22 mm (0.046 in to 0.048 in) in diameter. The holes shall be pointed 5° out of the plane of the Figure.

(iv) *Burner stand-off*. The burner stand-off on each burner shall consist of a collar fixed by a set screw onto the inlet tube of the burner head (Figure 5 of this part). The collar shall hold a 3 mm diameter stainless steel rod having a 12.7 mm by 51 mm by (2–2.5 mm) thick (0.5 in by 2 in by (0.08–0.10) in thick) stainless steel pad welded on its end with its face (and long axis) parallel to the T head of the burner. The foot pad shall be displaced about 10 mm to 12 mm from the longitudinal centerline of the burner head so that it does not rest on the test specimen in an area of peak heat flux. A short section (9.5 mm outer diameter (''OD''), about 80 mm long; ⅜ in OD, about 3.2 in long) of copper tubing shall be placed in the inlet gas line just before the burner to facilitate making the burner nominally parallel to the test specimen surface (by a procedure described in this paragraph). The copper tube on the top surface burner must be protected from excessive heat and surface oxidation by wrapping it with a suitable layer of high temperature insulation. Both copper tubes are to be bent by hand in the burner alignment process. They must be replaced if they become work-hardened or crimped in any way. The gas inlet lines (12.7 mm OD stainless steel tubing; 0.50 in) serve as arms leading back to the pivot points and beyond, as shown in Figure 6 of this part. The length to the pivot for the top burner shall be approximately 1000 mm (40 in).

(v) *Frame*. Figure 6 shows the frame that holds the burners and their pivots, which are adjustable vertically in height. All adjustments (burner height, burner arm length from the pivot point, counterweight positions along the burner arm) are facilitated by the use of knobs or thumbscrews as the set screws. The three point footprint of the burner frame, with the two forward points on wheels, facilitates burner movement and burner stability when stationary.

(vi) *Arms*. The metal arms attached to the burners shall be attached to a separate gas control console by flexible, reinforced plastic tubing.[1] The gas control console is mounted separately so as to facilitate its safe placement outside of the test room throughout the test procedure. The propane gas lines running between the console and the burner assembly must be anchored on the assembly before running to the burner inlet arms. A 1.5 m ± 25 mm (58 in ± 1 in) length of flexible, reinforced tubing between the anchor point and the end of each burner inlet allows free movement of the top burner about its pivot point. The top burner arm shall have a pair of moveable cylindrical counterweights that are used, as described below, to adjust the downward force on the stand-off foot.

(vii) *Burner head*. Each burner head shall have a separate pilot light consisting of a 3 mm OD (⅛in OD) copper tube with an independently-controlled supply of propane gas. The tube terminates within 10 mm of the center of the burner head. Care must be taken to set the pilot flame size small enough so as not to heat the test specimen before the timed burner exposure is begun.

(viii) *Flow control system*. Each burner shall have a flow control system of the type shown in Figure 7 of this part. Propane gas from a source such as a bottle is reduced in pressure to approximately 70 kilopascals (''kPa'') (20 pounds per square inch gage (''psig'')) and fed to the system shown in Figure 8 of this part. The gas flow to the burner is delivered in a square-wave manner (constant flow with rapid onset and termination) by means of the solenoid valve upstream of the flowmeter. An interval timer (accurate to ± 0.2 s) determines the burner flame duration. The pilot light assures that the burner will ignite when the solenoid valve opens[2]. The gas flow shall be set using a rotameter type of flowmeter, with a 150 mm scale, calibrated for propane. When calibrating the flowmeter, take into account that the flow resistance of the burner holes causes a finite pressure increase in the flowmeter above ambient. (If a calibration at one atmosphere is provided by the manufacturer, the flowmeter reading, at the internal pressure existing in the meter, required to get the flow rates listed in this paragraph must be corrected, typically by the square root of the absolute pressure ratio. This calls for measuring the actual pressure in the flow meters when set near the correct flow values. A value roughly in the range of 1 kPa to 3 kPa—5 in to 15 in of water—can be expected.) Useful guidelines for calibration are provided in Appendix A of this part.

(ix) *Gas flow rate*. Use propane gas with a known net heat of combustion of 46.5 ± 0.5 MJ/kg (nominally 99% to 100% propane). Each burner has a specific propane gas flow rate set with its respective, calibrated flowmeter. The gas flow rate to the top burner is 12.9 liters per minute (''L/min'') ± 0.1 L/min at a pressure of 101 ± 5 kPa (standard atmospheric pressure) and a temperature of 22 ± 3 °C. The gas flow rate to the side burner is 6.6 ± 0.05 L/min at a pressure of 101 ± 5 kPa (standard atmospheric pressure) and a temperature of 22 ± 3 °C. For the flowmeters supplied with the burner assembly, the black float setting for the top burner is expected to be in the 85 mm to 95 mm range. For the *side* burner, the expected range for the black float is 115 m to 125 mm. The total heat release rate of the burners is 27 kW.

[1] Fiber-reinforced plastic tubing (6 mm ID by 9.5 mm OD; ¼ inch ID by ¾ inch OD) made of PVC should be used.

[2] If the side burner, or more commonly one half of the side burner, fails to ignite quickly, adjust the position of the igniter, bearing in mind that propane is heavier than air. The best burner behavior test assessment is done against an inert surface (to spread the gas as it would during an actual test).

(b) *Conditioning.* Remove the specimens from any packaging prior to conditioning. Specimens shall be conditioned in air at a temperature greater than 18 °C (65 °F) and a relative humidity less than 55 percent for at least 48 continuous hours prior to test. Specimens shall be supported in a manner to permit free movement of air around them during conditioning.

(c) *Test preparation.* (1) *General.* Horizontal air flow at a distance of 0.5 m (20 in) on all sides of the test specimen at the mattress top height shall be ≤ 0.5 m/s. If there is any visual evidence that the burner flames are being shifted around during their exposure durations, the burner regions must be enclosed on two or more sides by at least a triple layer of screen wire. The screen(s) for the top burner shall sit on the mattress top but must be far enough away (typically 30 cm or more) so as not to interfere or interact with flame spread during the burner exposure. The screen for the side burner will require a separate support from below. All screens shall be removed at the end of the 70 second exposure interval.

(2) *Specimen.* Remove the test specimen from the conditioning room immediately before it is to be tested. Be sure the bed frame is approximately centered on the catch surface. Place the specimen on the bed frame. Carefully center them on the bed frame and on each other. The mattress shall be centered on top of the foundation (see Figure 1 of this part). However, in order to keep the heat flux exposure the same for the sides of the two components, if the mattress is 1 cm to 2 cm narrower than the foundation, the mattress shall be shifted so that the side to be exposed is in the same plane as the foundations. Refer to Figure 8 of this part. A product having an intended sleep surface on only one side shall be tested with the sleeping side up so that the sleeping surface is exposed to the propane burner.

(d) *Burner flow rate/flow timer confirmation.* Just prior to moving the burner adjacent to the test specimen, briefly ignite each burner at the same time, and check that the propane flow to that burner is set at the appropriate level on its flowmeter to provide the flows listed in paragraph (a)(5)(ix) of this section. Check that the timers for the burner exposures are set to 70 seconds for the top burner and 50 seconds for the side burner. For a new burner assembly, check the accuracy of the gas flow timers against a stop watch at these standard time settings. Set pilot flows to a level that will not cause them to impinge on sample surfaces.

(e) *Location of the gas burners.* Place the burner heads so that they are within 300 mm (1 ft) of the mid-length of the mattress. The general layout for the room configuration is shown in Figure 2 of this part. For a quilted mattress top the stand-off foot pad must alight on a high, flat area between dimples or quilting thread runs. The same is to be true for the side burner if that surface is quilted. If a specimen design presents a conflict in placement such that both burners cannot be placed between local depressions in the surface, the top burner shall be placed at the highest flat surface.

(f) *Burner set-up.* The burners shall be placed in relation to the mattress and foundation surfaces in the manner shown in Figure 9 of this part, *i.e.*, at the nominal spacings shown there and with the burner tubes nominally parallel [3] to the mattress surfaces on which they impinge. Since the heat flux levels seen by the test specimen surfaces depend on burner spacing, as well as gas flow rate, care must be taken with the set-up process.

(g) *Burner alignment procedure.* (1) *Preparation.* Complete the following before starting the alignment procedure:

(i) Check that the pivot point for the mattress top burner feed tube and the two metal plates around it are clean and well-lubricated so as to allow smooth, free movement.

(ii) Set the two burners such that the 5° out-of-plane angling of the flame jets makes the jets on the two burners point slightly *toward* each other.

(iii) Check the burner stand-off feet for straightness and perpendicularity between foot pad and support rod and to see that they are clean of residue from a previous test.

(iv) Have at hand the following items to assist in burner set-up: the jig, shown in Figure 10 of this part, for setting the stand-off feet at their proper distances from the front of the burner tube; a 3 mm thick piece of flat stock (any material) to assist in checking the parallelness of the burners to the mattress surfaces; and a 24 gage stainless steel sheet metal platen that is 30 mm (12 in) wide, 610 mm (24 in) long and has a sharp, precise 90° bend 355 mm (14 in) from one 30 mm wide end.

(2) *Alignment.* (i) Place the burner assembly adjacent to the test specimen. Place the sheet metal platen on the mattress with the shorter side on top. The location shall be within 30 cm (1 ft) of the longitudinal center of the mattress. The intended location of the stand-off foot of the top burner shall not be in a dimple or crease caused by the quilting of the mattress top. Press the platen laterally inward from the edge of the mattress so that its side makes contact with either the top and bottom tape edge or the vertical side of the mattress.[4] Use a 20 cm (8 in) strip of duct tape (platen to mattress top) to hold the platen firmly inward in this position.

(ii) With both burner arms horizontal (pinned in this position), fully retract the stand-off feet of both burners and, if necessary, the pilot tubes as well [5]. (Neither is to protrude past the front face of the burner tubes at this point.) Move the burner assembly forward (perpendicular to the mattress) until the vertical burner lightly contacts the sheet metal platen. Adjust the height of the vertical burner on its vertical support column so as to center the tube on the crevice between the mattress and the foundation. (This holds also for pillow top mattress tops, *i.e.*, ignore the crevice between the pillow top and the main body of the mattress.) [6] Adjust the height of the horizontal burner until it sits lightly on top of the sheet metal platen. Its burner arm should then be horizontal.

(iii) Move the horizontal burner in/out (loosen the thumb screw near the pivot point) until the outer end of the burner tube is 13 mm to 19 mm (½ in to ¾ in) from the corner bend in the platen (this is facilitated by putting a pair of lines on the top of the platen 13 mm and 19 mm from the bend and parallel to it). Tighten the thumb screw.

(iv) Make the horizontal burner parallel to the top of the platen (within 3 mm, ⅛ in over the burner tube length) by bending the copper tube section

[3] The top burner will tend to be tangential to the mattress surface at the burner mid-length; this orientation will not necessarily be parallel to the overall average mattress surface orientation nor will it necessarily be horizontal. This is a result of the shape of the mattress top surface.

[4] Mattresses having a convex side are treated separately since the platen cannot be placed in the above manner. Use the platen only to set the top burner parallelness. Set the in/out distance of the top burner to the specification in the paragraph (g)(2)(iii). Set the side burner so that it is approximately (visually) parallel to the flat side surface of the foundation below the mattress/foundation crevice once its foot is in contact with the materials in the crevice area. The burner will not be vertical in this case. If the foundation side is also non-flat, set the side burner vertical (± 3 mm, as above) using a bubble level as a reference. The side surface convexities will then bring the bowed out sections of the specimen closer to the burner tube than the stand-off foot.

[5] The pilot tubes can normally be left with their ends just behind the plane of the front of the burner tube. This way they will not interfere with positioning of the tube but their flame will readily ignite the burner tubes.

[6] For tests of the mattress alone, set the side burner mid-height equal to the lower tape edge of the mattress.

appropriately. Note: After the platen is removed in paragraph (g)(2)(vii), the burner tube may not be horizontal; this is normal. For mattress/foundation combinations having nominally flat, vertical sides, the similar adjustment for the vertical burner is intended to make that burner parallel to the sides and vertical. Variations in the shape of mattresses and foundations can cause the platen section on the side to be non-flat and/or non-vertical. If the platen is flat and vertical, make the vertical burner parallel to the side of the platen (± 3 mm) by bending its copper tube section as needed. If not, make the side burner parallel to the mattress/foundation sides by the best visual estimate after the platen has been removed.

(v) Move the burner assembly perpendicularly back away from the mattress about 30 cm (1 ft). Set the two stand-off feet to their respective distances using the jig designed for this purpose. Install the jig *fully* onto the burner tube (on the *same side* of the tube as the stand-off foot), with its side edges parallel to the burner feed arm, at about the position where one end of the foot will be. Loosen the set screw and slide the foot out to the point where it is flush with the bottom end of the jig. Tighten the set screw. Make sure the long axis of the foot is parallel to the burner tube. It is essential to use the correct side of the spacer jig with each burner. Double check this. The jig must be clearly marked.

(vi) Set the downward force of the horizontal burner. Remove the retainer pin near the pivot. While holding the burner feed arm horizontal using a spring scale [7] hooked onto the thumbscrew holding the stand-off foot, move the small and/or large weights on the feed tube appropriately so that the spring scale reads 170 g to 225 g (6 oz to 8 oz).

(vii) Remove the sheet metal platen (and tape holding it).

(viii) Hold the horizontal burner up while sliding the burner assembly forward until its stand-off foot just touches the mattress and/or the foundation [8], then release the horizontal burner. The outer end of the burner tube should extend at least 6 mm to 12 mm (¼ in to ½ in) out beyond the uppermost corner/edge of the mattress so that the burner flames will hit the tape edge. (For a pillow top mattress, this means the outer edge of the pillow top portion and the distance may then be greater than 6 mm to 12 mm.) If this is not the case, move the burner assembly (perpendicular to the mattress side)—not the horizontal burner alone—until it is. Finally, move the vertical burner tube until its stand-off foot just touches the side of the mattress and/or the foundation. (Use the set screw near the vertical burner pivot.)

(ix) Make sure all thumbscrews are adequately tightened. Care must be taken, once this set-up is achieved, to avoid bumping the burner assembly or disturbing the flexible lines that bring propane to it.

(x) If there is *any* indication of flow disturbances in the test facility which cause the burner flames or pilot flames to move around, place screens around the burners so as to minimize these disturbances [9]. These screens (and any holders) must be far enough away from the burners (about 30 cm or more for the top, less for the side) so that they do not interact with the flames growing on the specimen surfaces. For the top surface burner, at least a triple layer of window screen approximately 30 cm high sitting vertically on the mattress top (Figure 9 of this part) has proved satisfactory. For the side burner at least a triple layer of screen approximately 15 cm wide, formed into a square-bottom U-shape and held from below the burner has proved satisfactory. Individual laboratories will have to experiment with the best arrangement for suppressing flow disturbances in their facility.

(xi) Proceed with the test (*see* Test Procedure in paragraph (h) of this section and Appendix B of this part).

(h) *Running the test.* (1) Charge the hose line to be used for fire suppression with water.

(2) Ignite the pilot lights on both burners and make sure they are small enough as to not heat the test specimen surfaces significantly.

(3) With the calorimetry system fully operational, after instrument zeroes and spans, start the video lights and video camera and data logging systems two minutes before burner ignition (or, if not using video, take a picture of the setup).

(4) Start the burner exposure by activating power to the burner timers. Also start a 30 minute timer of the test duration. If not using video, one photo must be taken within the first 45 seconds of starting the burners.

(5) When the burners go out (after 70 seconds for the longer exposure), carefully lift the top burner tube away from the specimen surface, producing as little as possible disturbance to the specimen. Remove the burner assembly from the specimen area to facilitate the video camera view of the full side of the specimen. In the case of the room-based configurations, remove the burner assembly from the room to protect it. Remove all screens.

(i) *Video recording/photographs.* Place a video or still frame camera so as to have (when the lens is zoomed out) just slightly more than a full-length view of the side of the test specimen being ignited, including a view of the flame impingement area while the burner assembly is present. The view must also include the catch pan so that it is clear whether any melt pool fire in this pan participates significantly in the growth of fire on the test specimen. The camera shall include a measure of elapsed time to the nearest 1 second for video and 1 minute for still frame within its recorded field of view (preferably built-in to the camera). For the room-based configuration, the required full-length view of the sample may require an appropriately placed window, sealed with heat resistant glass, in one of the room walls. Place the camera at a height just sufficient to give a view of the top of the specimen while remaining under any smoke layer that may develop in the room. The specimen shall be brightly lit so that the image does not lose detail to over-exposed flames. This will require a pair or more of 1 kW photo flood lights illuminating the viewed side of the specimen. The lights may need to shine into the room from the outside via sealed windows.

(j) *Cessation of test.* (1) The heat release rate shall be recorded and video/photographs taken until either 30 minutes has elapsed since the start of the burner exposure or a fire develops of such size as to require suppression for the safety of the facility.

(2) Note the time and nature of any unusual behavior that is not fully within the view of the video camera. This is most easily done by narration to a camcorder.

(3) Run the heat release rate system and datalogger until the fire has been

[7] An acceptable spring scale has a calibrated spring mounted within a holder and hooks on each end.

[8] The foot should depress the surface it first contacts by no more than 1 mm to 2 mm. This is best seen up close, not from the rear of the burner assembly. However, if a protruding tape edge is the first item contacted, compress it until the foot is in the plane of the mattress/foundation vertical sides. The intent here is that the burner be spaced a fixed distance from the vertical mattress/foundation sides, not from an incidental protrusion. Similarly, if there is a wide crevice in this area which would allow the foot to move inward and thereby place the burners too close to the vertical mattress/foundation sides, it will be necessary to use the spacer jig (rather than the stand-off foot) above or below this crevice to set the proper burner spacing. Compress the mattress/foundation surface 1 mm to 2 mm when using the jig for this purpose.

[9] The goal here is to keep the burner flames impinging on a fixed area of the specimen surface rather than wandering back and forth over a larger area.

fully out for several minutes to allow the system zero to be recorded.

§ 1633.8 Findings.

(a) *General.* In order to issue a flammability standard under the FFA, the FFA requires the Commission to make certain findings and to include these in the regulation, 15 U.S.C. 1193(j)(2). These findings are discussed in this section.

(b) *Voluntary standards.* No findings concerning compliance with and adequacy of a voluntary standard are necessary because no relevant voluntary standard addressing the risk of injury that is addressed by this regulation has been adopted and implemented.

(c) *Relationship of benefits to costs.* The Commission estimates the potential total lifetime benefits of a mattress that complies with this standard to range from $62 to $74 per mattress (based on a 10 year mattress life and a 3% discount rate). The Commission estimates total resource costs of the standard to range from $13 to $44 per mattress. This yields net benefits of $18 to $62 per mattress. The Commission estimates that aggregate lifetime benefits associated with all mattresses produced the first year the standard becomes effective range from $1,560 to $1,880 million, and that aggregate resource costs associated with these mattresses range from $320 to $1,110 million, yielding net benefits of about $450 to $1,560 million. Accordingly, the Commission finds that the benefits from the regulation bear a reasonable relationship to its costs.

(d) *Least burdensome requirement.* The Commission considered the following alternatives: Alternative maximum peak heat release rate and test duration, alternative total heat released in the first 10 minutes of the test, mandatory production testing, a longer effective date, taking no action, relying on a voluntary standard, and requiring labeling alone (without any performance requirements). The alternatives of taking no action, relying on a voluntary standard (if one existed) requiring labeling alone are unlikely to adequately reduce the risk. Requiring a criterion of 25 MJ total heat release during the first 10 minutes of the test instead of 15 MJ would likely reduce the estimated benefits (deaths and injuries reduced) without having much effect on costs. Both options of increasing the duration of the test from 30 minutes to 60 minutes and decreasing the peak rate of heat release from 200 kW to 150 kW would likely increase costs significantly without substantial increase in benefits. Requiring production testing would also likely increase costs. Therefore, the Commission finds that an open flame standard for mattresses with the testing requirements and criteria that are specified in the Commission rule is the least burdensome requirement that would prevent or adequately reduce the risk of injury for which the regulation is being promulgated.

§ 1633.9 Glossary of terms.

(a) *Absorbent pad.* Pad used on top of mattress. Designed to absorb moisture/body fluids thereby reducing skin irritation, can be one time use.

(b) *Basket pad.* Cushion for use in an infant basket.

(c) *Bunk beds.* A tier of beds, usually two or three, in a high frame complete with mattresses (*see* Figure 11 of this part).

(d) *Car bed.* Portable bed used to carry a baby in an automobile.

(e) *Carriage pad.* Cushion to go into a baby carriage.

(f) *Chaise lounge.* An upholstered couch chair or a couch with a chair back. It has a permanent back rest, no arms, and sleeps one (*see* Figure 11).

(g) *Convertible sofa.* An upholstered sofa that converts into an adult sized bed. Mattress unfolds out and up from under the seat cushioning (*see* Figure 11).

(h) *Corner groups.* Two twin size bedding sets on frames, usually slipcovered, and abutted to a corner table. They also usually have loose bolsters slipcovered (*see* Figure 11).

(i) *Crib bumper.* Padded cushion which goes around three or four sides inside a crib to protect the baby. Can also be used in a playpen.

(j) *Daybed.* Daybed has foundation, usually supported by coil or flat springs, mounted between arms on which mattress is placed. It has permanent arms, no backrest, and sleeps one (*see* Figure 11).

(k) *Dressing table pad.* Pad to cushion a baby on top of a dressing table.

(l) *Drop-arm loveseat.* When side arms are in vertical position, this piece is a loveseat. The adjustable arms can be lowered to one of four positions for a chaise lounge effect or a single sleeper. The vertical back support always remains upright and stationary (*see* Figure 11).

(m) *Futon.* A flexible mattress generally used on the floor that can be folded or rolled up for storage. It usually consists of resilient material covered by ticking.

(n) *High riser.* This is a frame of sofa seating height with two equal size mattresses without a backrest. The frame slides out with the lower mattress and rises to form a double or two single beds (*see* Figure 11).

(o) *Infant carrier and lounge pad.* Pad to cushion a baby in an infant carrier.

(p) *Mattress foundation.* This is a ticking covered structure used to support a mattress or sleep surface. The structure may include constructed frames, foam, box springs or other materials used alone or in combination.

(q) *Murphy Bed.* A style of sleep system where the mattress and foundation are fastened to the wall and provide a means to retract or rotate the bed assembly into the wall to release more floor area for other uses.

(r) *Pillow.* Cloth bag filled with resilient material such as feathers, down, sponge rubber, urethane, or fiber used as the support for the head of a person.

(s) *Playpen pad.* Cushion used on the bottom of a playpen.

(t) *Portable crib.* Smaller size than a conventional crib. Can usually be converted into a playpen.

(u) *Quilted* means stitched with thread or by fusion through the ticking and one or more layers of material.

(v) *Roll-away-bed.* Portable bed which has frame that folds with the mattress for compact storage.

(w) *Sleep lounge.* Upholstered seating section is mounted on a frame. May have bolster pillows along the wall as backrests or may have attached headrests (*see* Figure 11).

(x) *Stroller pad.* Cushion used in a baby stroller.

(y) *Sofa bed.* These are pieces in which the back of the sofa swings down flat with the seat to form the sleeping surface. All upholstered. Some sofa beds have bedding boxes for storage of bedding. There are two types: The one-piece, where the back and seat are upholstered as a unit, supplying an unbroken sleeping surface; and the two-piece, where back and seat are upholstered separately (*see* Figure 11).

(z) *Sofa lounge*—(includes glideouts). Upholstered seating section is mounted on springs and in a frame that permit it to be pulled out for sleeping. Has upholstered backrest bedding box that is hinged. Glideouts are single sleepers with sloping seats and backrests. Seat pulls out from beneath back and evens up to supply level sleeping surface (*see* Figure 11).

(aa) *Studio couch.* Consists of upholstered seating section on upholstered foundation. Many types convert to twin beds (*see* Figure 11).

(bb) *Studio divan.* Twin size upholstered seating section with foundation is mounted on metal bed frame. Has no arms or backrest, and sleeps one (*see* Figure 11).

(cc) *Trundle bed.* A low bed which is rolled under a larger bed. In some lines,

the lower bed springs up to form a double or two single beds as in a high riser (*see* Figure 11).

(dd) *Tufted* means buttoned or laced through the ticking and upholstery material and/or core, or having the ticking and loft material and/or core drawn together at intervals by any other method which produces a series of depressions on the surface.

(ee) *Twin studio divan.* Frames which glide out (but not up) and use seat cushions, in addition to upholstered foundation to sleep two. Has neither arms nor back rest (*see* Figure 11).

(ff) *Flip or sleeper chair.* Chair that unfolds to be used for sleeping, typically has several connecting fabric covered, solid foam core segments.

Subpart B—Rules and Requirements

§ 1633.10 Definitions.

(a) *Standard* means the Standard for the Flammability (Open-Flame) of Mattresses and Foundations (16 CFR part 1633, subpart A).

(b) The definition of terms set forth in § 1633.2 of the standard shall also apply to this subpart.

§ 1633.11 Records.

(a) *Test and manufacturing records—General.* Every manufacturer (including importers) or other person initially introducing into commerce mattresses or mattress and foundation sets subject to the standard, irrespective of whether guarantees are issued relative thereto, shall maintain the following records:

(1) Test results and details of each test performed by or for that manufacturer (including failures), whether for prototype, confirmation, or production, in accordance with § 1633.7. Details shall include: Location of test facility, type of test room, test room conditions, prototype or production identification number, and test data including the peak rate of heat release, total heat release in first 10 minutes, a graphic depiction of the peak rate of heat release and total heat release over time. These records shall include the name and signature of person conducting the test, the date of the test, and a certification by the person overseeing the testing as to the test results and that the test was carried out in accordance with the Standard. For confirmation tests, the identification number must be that of the prototype tested.

(2) Video and/or a minimum of eight photographs of the testing of each mattress or mattress and foundation set, in accordance with § 1633.4 (one taken before the test starts, one taken within 45 seconds of the start of the test, and the remaining six taken at five minute intervals, starting at 5 minutes and ending at 30 minutes), with the prototype identification number or production lot identification number of the mattress or mattress foundation set, date and time of test, and name and location of testing facility clearly displayed.

(b) *Prototype records.* In addition to the records specified in paragraph (a) of this section, the following records related to prototype testing shall be maintained:

(1) Unique identification number for the qualified prototype and a list of the unique identification numbers of each prototype based on the qualified prototype.

(2) A detailed description of all materials, components, and methods of construction for each prototype mattress or prototype mattress and foundation set. Such description shall include at a minimum, the specifications of all materials and components, name and location of each material and component supplier, and a physical sample of each material and component of the prototype.

(3) A list of which models and production lots of mattresses or mattress and foundation sets are represented by each prototype identification number.

(4) Where a prototype is not required to be tested before sale, pursuant to § 1633.4(b), the prototype identification number of the qualified prototype on which the mattress to be offered for sale is based, and, at a minimum, the manufacturing specifications and a description of the materials substituted and/or the size change, photographs or physical specimens of the substituted materials, and documentation based on objectively reasonable criteria that the change in any component, material, or method of construction will not cause the prototype to exceed the test criteria specified in § 1633.3(b).

(5) Identification, composition, and details of the application of any flame retardant treatments and/or inherently flame resistant fibers or other materials employed in mattress components.

(c) *Pooling confirmation test records.* With respect to pooling confirmation testing, records shall be maintained to show:

(1) The prototype identification number assigned by the original prototype manufacturer.

(2) Name and location of the prototype manufacturer.

(3) Copy of prototype test records, and records required by paragraph (b)(2) of this section.

(4) A list of models of mattresses, and/or mattress and foundation sets, represented by the prototype.

(d) *Quality assurance records.* In addition to the records required by paragraph (a) of this section, the following quality assurance records shall be maintained:

(1) A written copy of the manufacturer's quality assurance procedures.

(2) Records of any production tests performed. Production test records must be maintained and shall include in addition to the requirements of paragraph (a) of this section, an assigned production lot identification number and the identification number of the prototype associated with the specimen tested.

(3) For each prototype, the number of mattresses or mattress and foundation sets in each production lot based on that prototype.

(4) The duration of manufacture of the production lot, *i.e.*, the start and end dates of production of that lot.

(5) Component, material and assembly records. Every manufacturer conducting tests and/or technical evaluations of components and materials and/or methods of construction must maintain detailed records of such tests and evaluations.

(e) *Record retention requirements.* The records required under this section shall be maintained by the manufacturer (including importers) for as long as mattresses/foundations based on the prototype in question are in production and shall be retained for 3 years thereafter. Records shall be available upon the request of Commission staff.

§ 1633.12 Labeling.

(a) Each mattress or mattress/foundation set subject to the standard shall bear a permanent, conspicuous, and legible label containing:

(1) Name of the manufacturer;

(2) Location of the manufacturer, including street address, city and state;

(3) Month and year of manufacture;

(4) Model identification;

(5) Prototype identification number for the mattress; and

(6) A certification that the mattress complies with this standard.

(b) The information required on labels by this section shall be set forth separately from any other information appearing on such label. Other information, representations, or disclosures, appearing on labels required by this section or elsewhere on the item, shall not interfere with, minimize, detract from, or conflict with the required information.

(c) No person, other than the ultimate consumer, shall remove or mutilate, or cause or participate in the removal or mutilation of, any label required by this section to be affixed to any item.

§ 1633.13 Tests for guaranty purposes, compliance with this section, and one of a kind exemption.

(a) *Tests for guaranty purposes.* Reasonable and representative tests for the purpose of issuing a guaranty under section 8 of the Flammable Fabrics Act, 15 U.S.C. 1197, for mattresses or mattress and foundation sets subject to the standard shall be the tests performed to show compliance with the standard.

(b) *Compliance with this section.* No person subject to the Flammable Fabrics Act shall manufacture for sale, import, distribute, or otherwise market or handle any mattress or mattress and foundation set which is not in compliance with the provisions under subpart B of this part.

(c) ''*One of a kind'' exemption for physician prescribed mattresses.* (1)(i) A mattress or mattress and foundation set manufactured in accordance with a physician's written prescription or manufactured in accordance with other comparable written medical therapeutic specification, to be used in connection with the treatment or management of a named individual's physical illness or injury, shall be considered a ''one of a kind mattress'' and shall be exempt from testing under the standard pursuant to § 1633.7 thereof: Provided, that the mattress or mattress and foundation set bears a permanent, conspicuous and legible label which states:

WARNING: This mattress or mattress and foundation set may be subject to a large fire if exposed to an open flame. It was manufactured in accordance with a physician's prescription and has not been tested under the Federal Standard for the Flammability (Open-Flame) of Mattresses and Foundation Sets (16 CFR part 1633).

(ii) Such labeling must be attached to the mattress or mattress and foundation set so as to remain on or affixed thereto for the useful life of the mattress or mattress and foundation set. The label must be at least 40 square inches (250 sq. cm) with no linear dimension less than 5 inches (12.5 cm). The letters in the word ''WARNING'' shall be no less than 0.5 inch (1.27 cm) in height and all letters on the label shall be in a color which contrasts with the background of the label. The warning statement which appears on the label must also be conspicuously displayed on the invoice or other sales papers that accompany the mattress in commerce from the manufacturer to the final point of sale to a consumer.

(2) The manufacturer of a mattress or mattress and foundation set exempted from testing under this paragraph shall, in lieu of the records required to be kept by §1633.10, retain a copy of the written prescription or other comparable written medical therapeutic specification for such mattress during a period of three years, measured from the date of manufacture.

(3) For purposes of this subpart the term physician shall mean a physician, chiropractor or osteopath licensed or otherwise permitted to practice by any State of the United States.

Subpart C—Interpretations and Policies

§ 1633.14 Policy clarification on renovation of mattresses.

(a) Section 3 of the Flammable Fabrics Act (15 U.S.C. 1192) prohibits, among other things, the ''manufacture for sale'' of any product which fails to conform to an applicable standard issued under the Act. The standard for the Flammability (Open-Flame) of Mattresses and Foundations in subpart A of this part, issued pursuant to the Act, provides that, with certain exceptions, mattresses must be tested according to a prescribed method. The standard does not exempt renovation; nor does it specifically refer to renovation.

(b) The purpose of this subpart is to inform the public that mattresses renovated for sale are considered by the Commission to be mattresses manufactured for sale and, therefore, subject to the requirements of the open-flame Mattress Standard. The Commission believes that this policy clarification will better protect the public against the unreasonable risk of fires leading to death, personal injury or significant property damage, and assure that purchasers of renovated mattresses receive the same protection under the Flammable Fabrics Act as purchasers of new mattresses.

(c) For purposes of this subpart, mattress renovation includes a wide range of operations. Replacing the ticking or batting, stripping a mattress to its springs, rebuilding a mattress, or replacing components with new or recycled materials, are all part of the process of renovation. Any one, or any combination of one or more, of these steps in mattress renovation is considered to be mattress manufacture.

(d) If the person who renovates the mattress intends to retain the renovated mattress for his or her own use, or if a customer or a renovator merely hires the services of the renovator and intends to take back the renovated mattress for his or her own use, ''manufacture for sale'' has not occurred and such a renovated mattress is not subject to the mattress standard.

(e) However, if a renovated mattress is sold or intended for sale, either by the renovator or the owner of the mattress who hires the services of the renovator, such a transaction is considered to be ''manufacture for sale''.

(f) Accordingly, mattress renovation is considered by the Commission to be ''manufacture for sale'' and, therefore, subject to the open-flame Mattress Standard, when renovated mattresses are sold or intended for sale by a renovator or the customer of the renovator.

(g) A renovator who believes that certain mattresses are entitled to one-of-a-kind exemption, may present relevant facts to the Commission and petition for an exemption. Renovators are expected to comply with all the testing requirements of the open-flame Mattress Standard until an exemption is approved.

BILLING CODE 6355–01–P

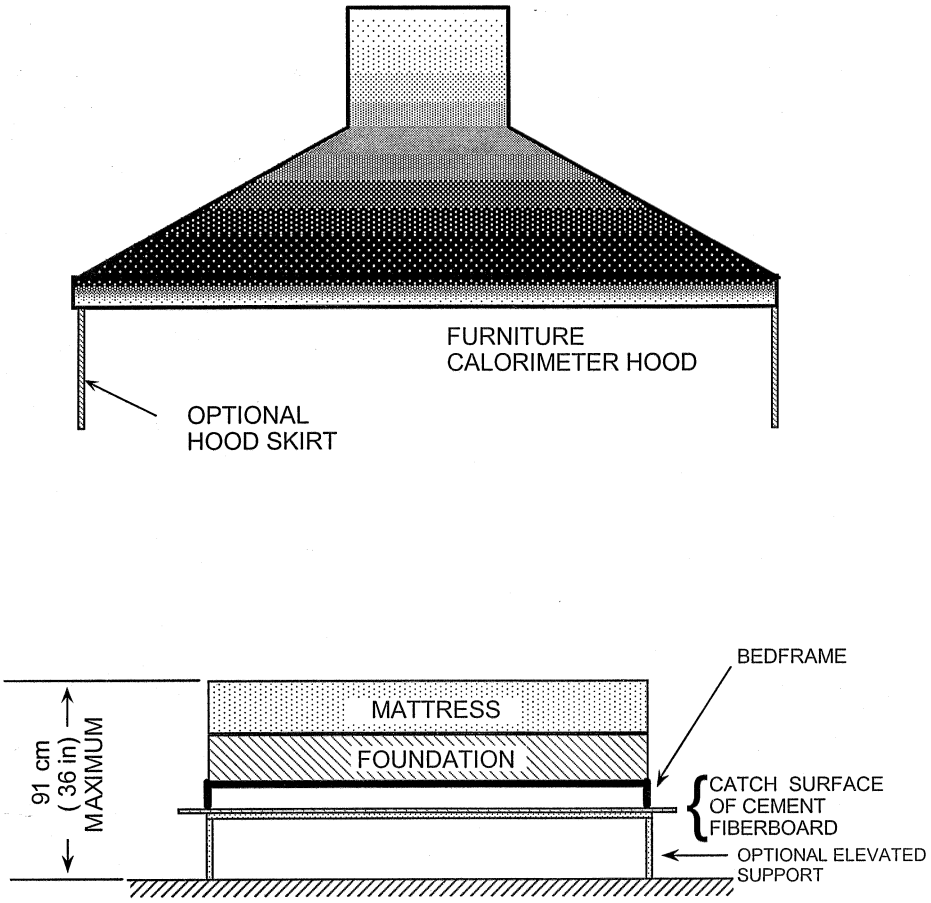

FIGURE 1. TEST ASSEMBLY, SHOWN IN FURNITURE CALORIMETER. (CONFIGURATION A.)

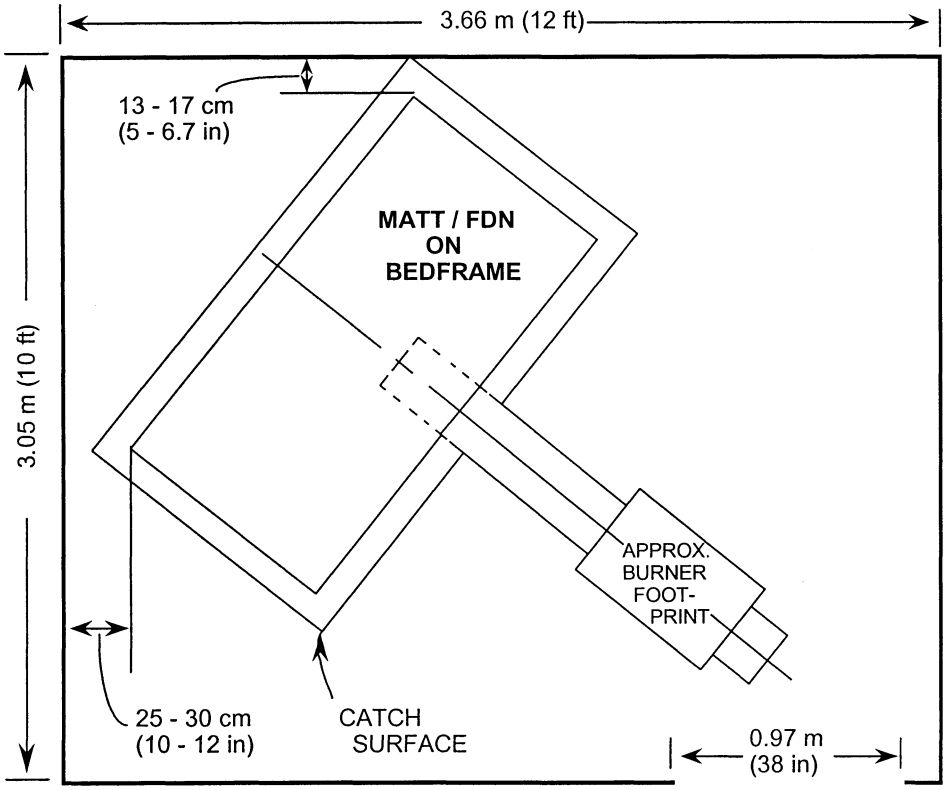

FIGURE 2. TEST ARRANGEMENT IN 3.05m X 3.66 m (10 ft x 12 ft) ROOM; CONFIGURATION B.

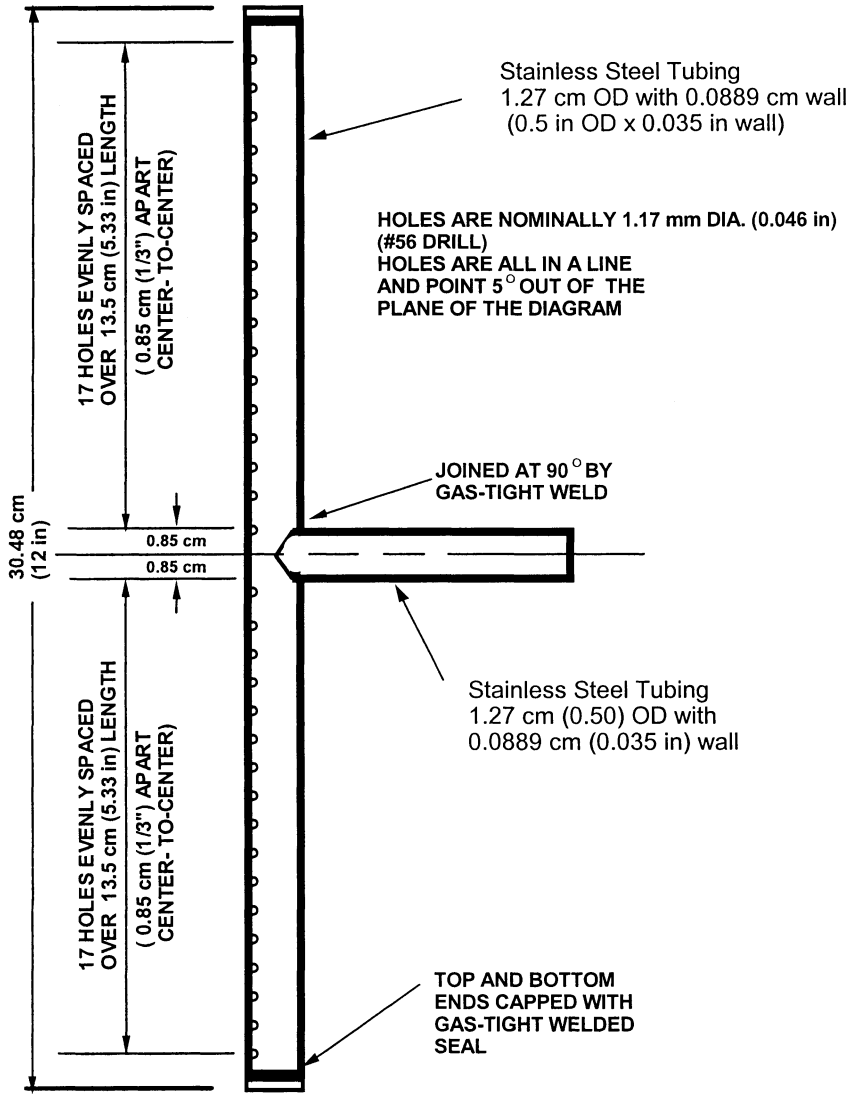

FIGURE 3. DETAILS OF HORIZONTAL BURNER HEAD.

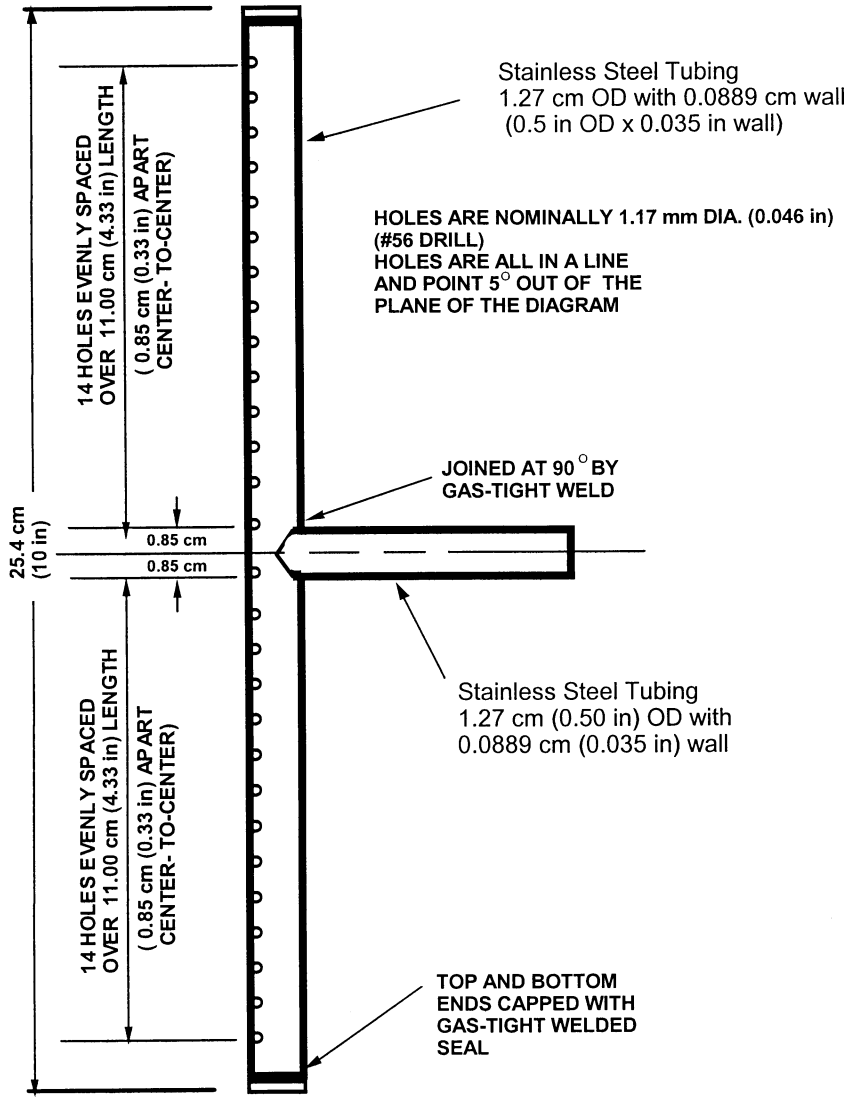

FIGURE 4. DETAILS OF VERTICAL BURNER HEAD.

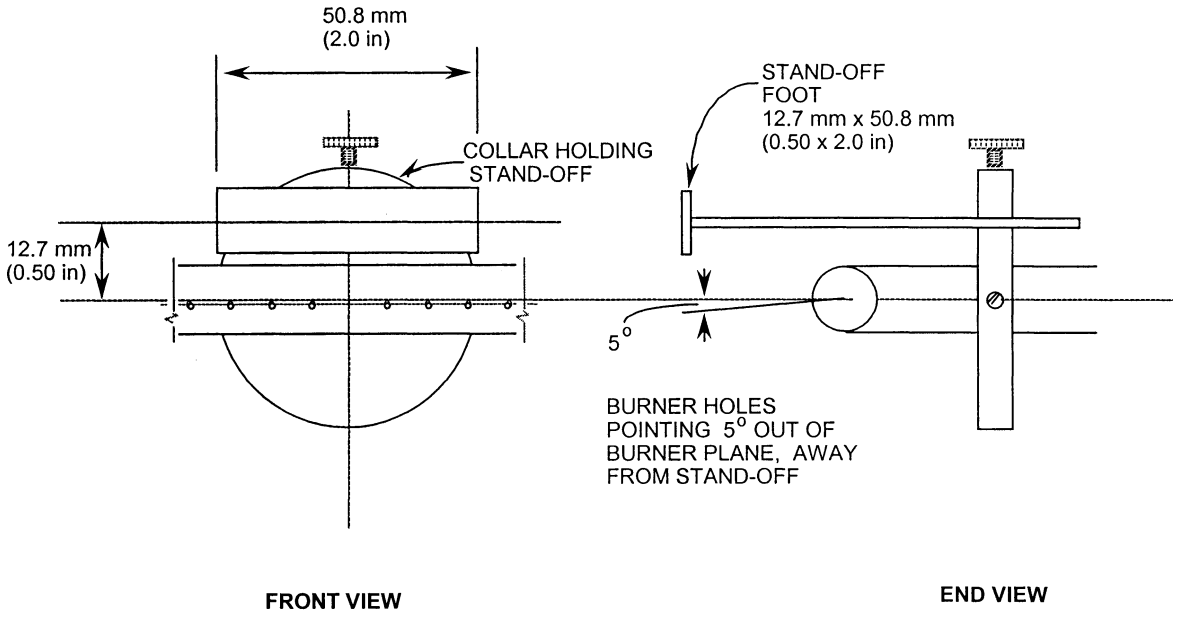

FIGURE 5. DETAILS OF BURNER STAND-OFF.

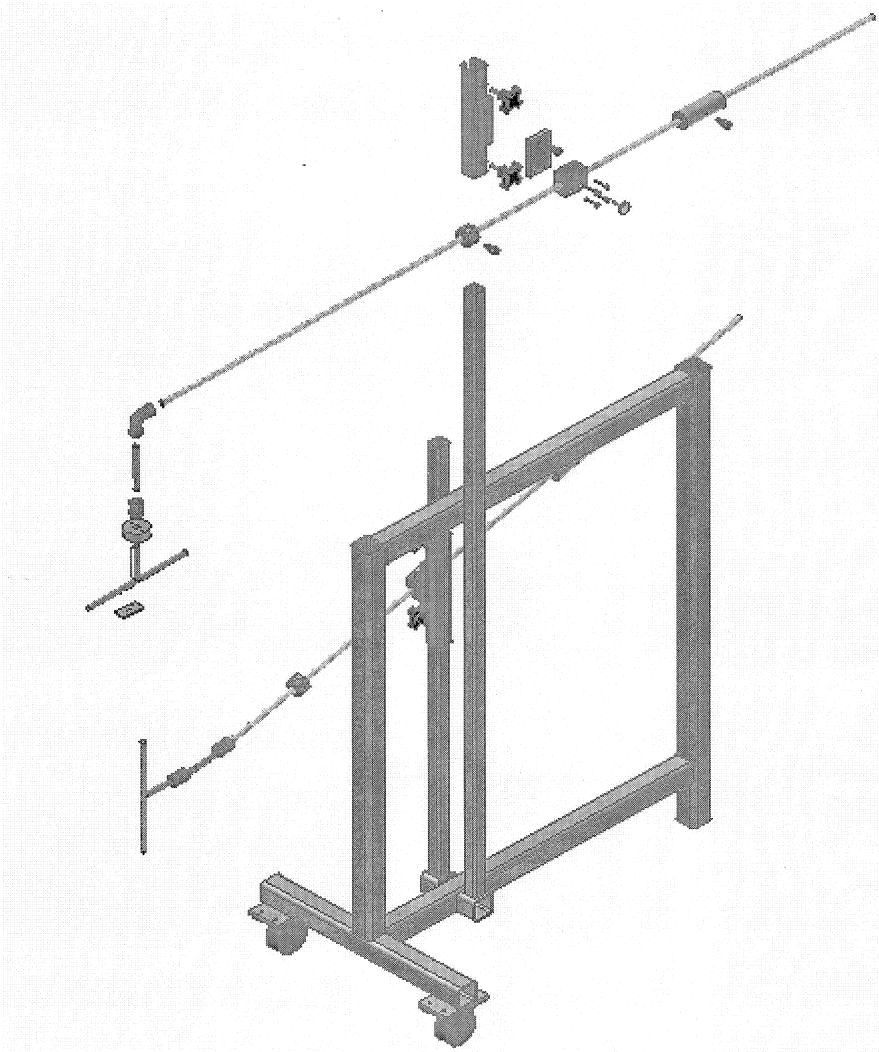

FIGURE 6. BURNER ASSEMBLY* SHOWING ARMS AND PIVOTS (Shoulder Screws), IN RELATION TO, PORTABLE FRAME ALLOWING BURNER HEIGHT ADJUSTMENT.

*Note that the feed tube for the side burner will be horizontal when the side burner pivot is locked in place, as is usual during a test exposure.

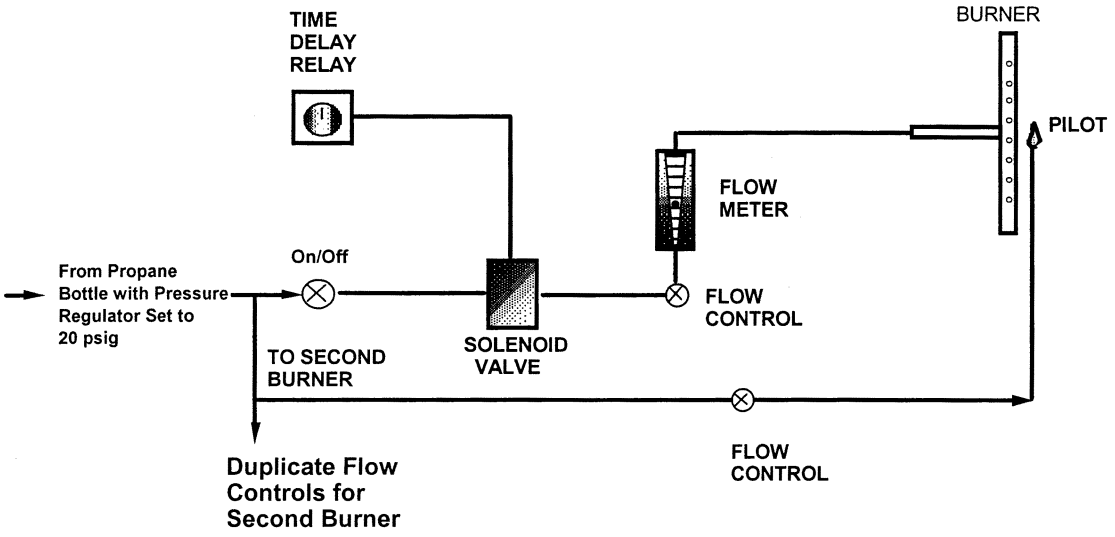

FIGURE 7. ELEMENTS OF PROPANE FLOW CONTROL FOR EACH BURNER

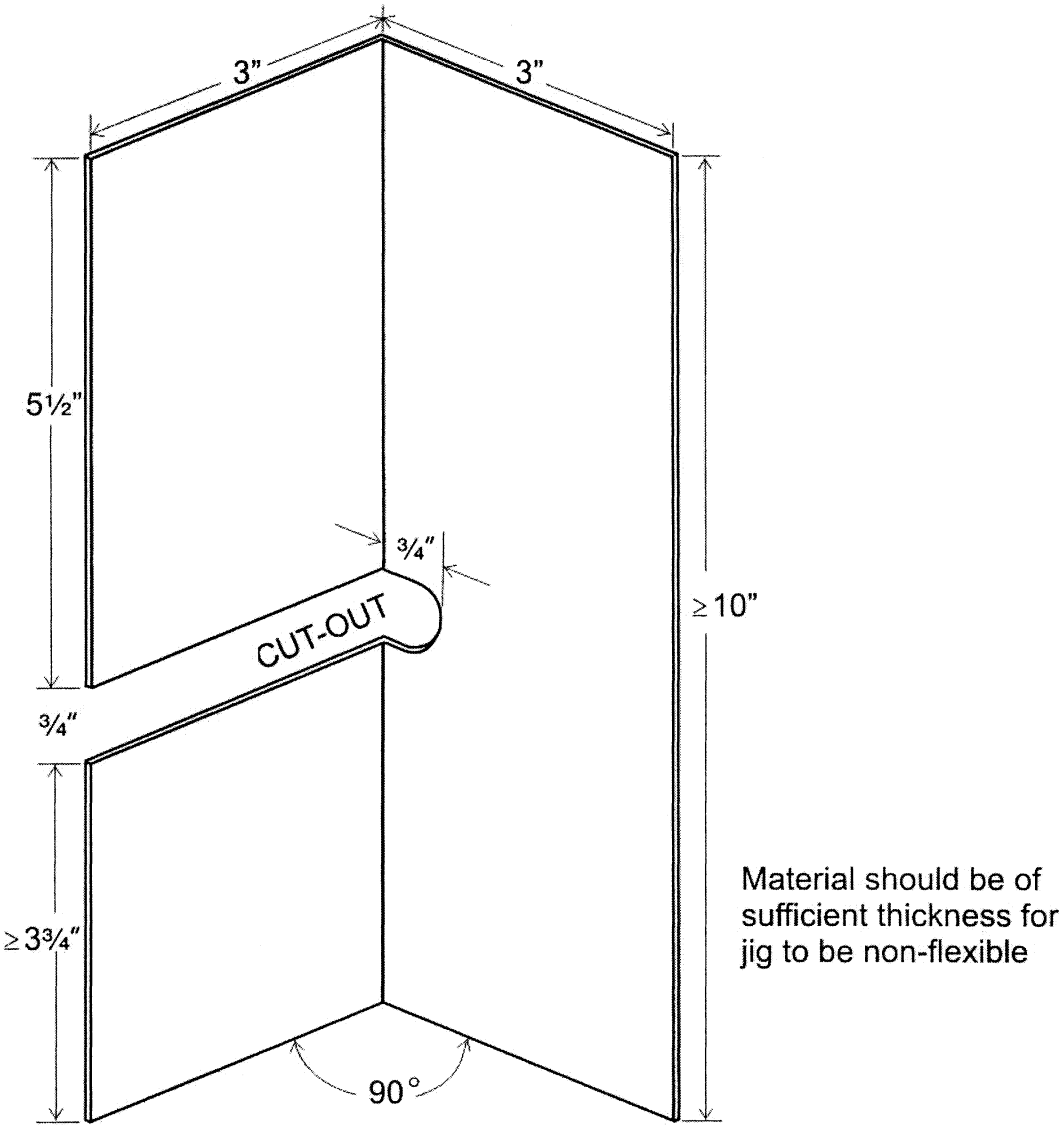

FIGURE 8 JIG FOR SETTING MATTRESS AND FOUNDATION SIDES IN SAME PLANE

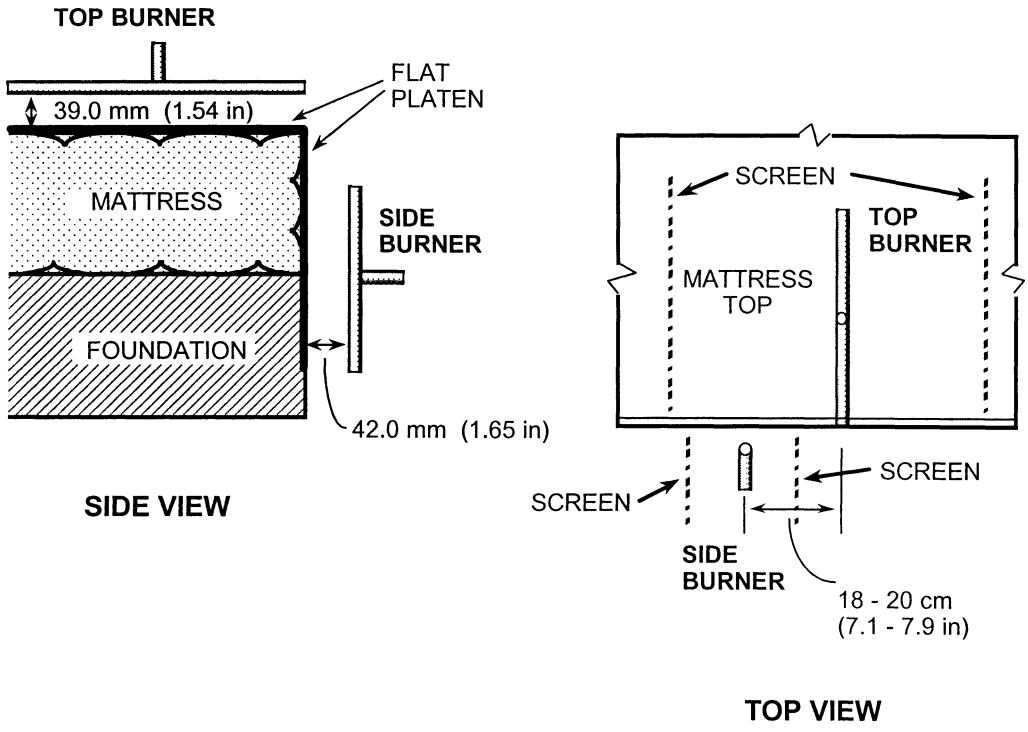

FIGURE 9. BURNER PLACEMENTS ON MATTRESS / FOUNDATION

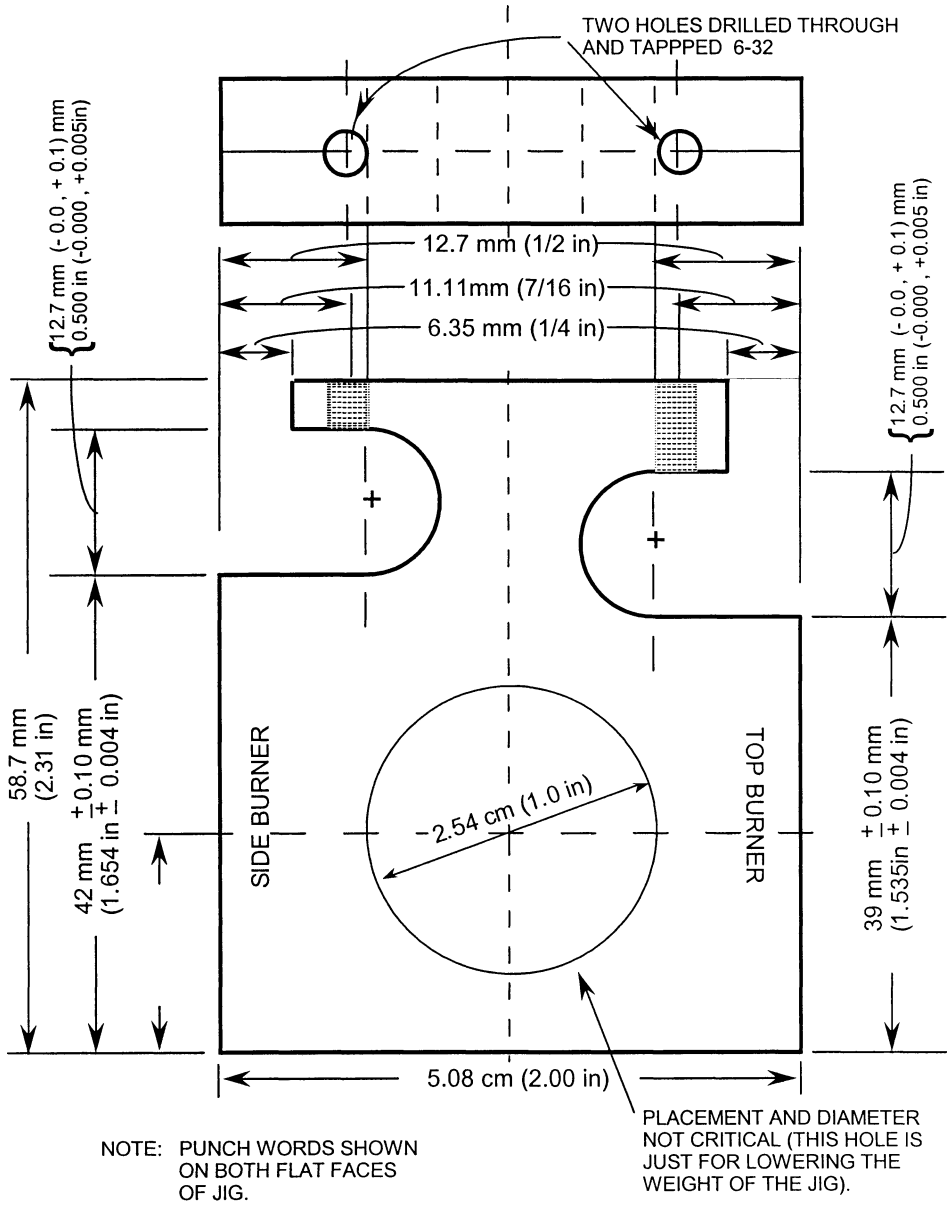

FIGURE 10. JIG FOR SETTING BURNERS AT PROPER DISTANCES FROM MATTRESS / FOUNDATION

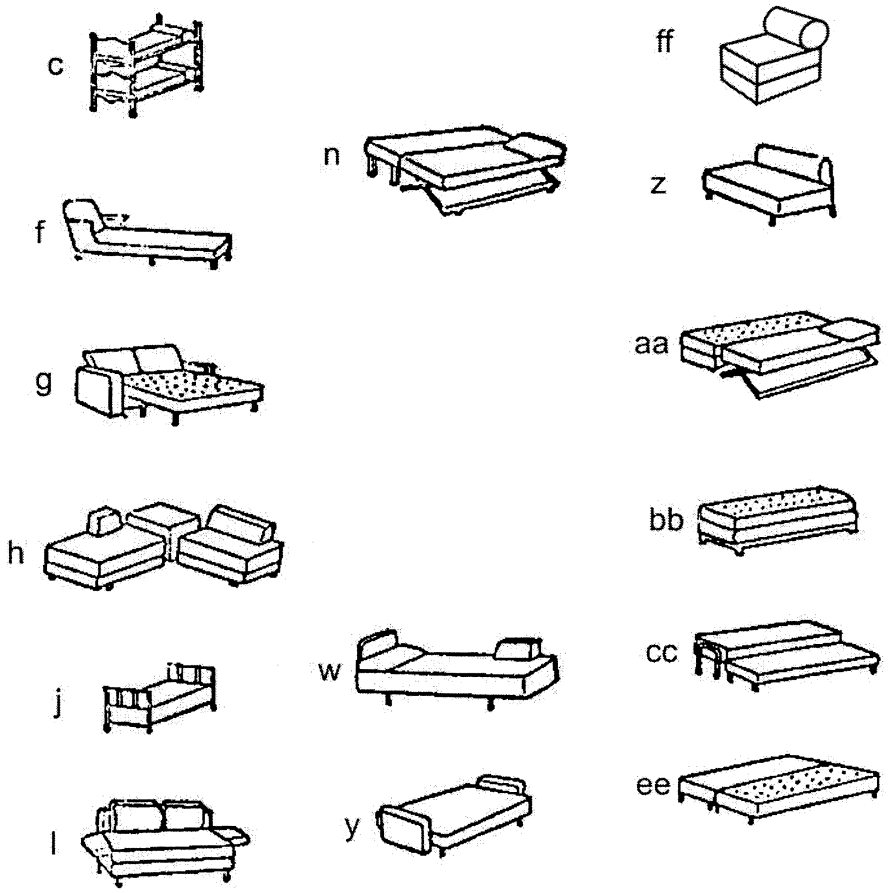

FIGURE 11. DIAGRAMS FOR GLOSSARY OF TERMS

BILLING CODE 6355–01–C

Appendix A: Calibration of Propane Flowmeters

1. Once the assembly of the burner is completed and all the connecting points are checked for gas leakage, the most critical task is ensuring the exact flow rates of propane into the top and side burners, as described in the test protocol. The gas flow rates are specified at 12.9 Liters per minute (LPM) ± 0.1 LPM and 6.6 LPM ± 0.05 LPM for the top and side burners (Burners 1 and 2), respectively, at a pressure of 101 ± 5 kiloPascal (kPa) (standard atmospheric pressure) and a temperature of 22 ± 3° Centigrade (C). The rotameters that are installed in the control box of the burner assembly need to be calibrated for accurate measurement of these flow rates.

2. The most practical and accurate method of measuring and calibrating the flow rate of gases (including propane) is use of a diaphragm test meter (also called a dry test meter). A diaphragm test meter functions based on positive displacement of a fixed volume of gas per rotation and its reading is therefore independent of the type of the gas being used. The gas pressure and temperature, however, can have significant impact on the measurement of flow rate.

3. The gas pressure downstream of the rotameters that are installed in the control box of the burner assembly is maintained near atmospheric pressure (only a few millimeters of water above atmosphere). Therefore, the best location to place the diaphragm test meter for gas flow calibration is right downstream of the control box. The pressure at the propane tank must be set at 20 ± 0.5 pounds per square inch gage (psig).

Calibration Procedure:

Install the diaphragm test meter (DTM) downstream of the control box in the line for the top burner. Check all connecting points for gas leakage. Open the main valve on the propane tank and set a pressure of 20 ± 0.5 psig. Set the timers in the control box for 999 seconds (or the maximum range possible). Record the barometric pressure. Turn the ''Burner 1'' switch to ON and ignite the top burner. Allow the gas to flow for 2–3 minutes until the DTM is stabilized. Record the pressure and temperature in the DTM. Use a stopwatch to record at least one minute worth of complete rotations while counting the number of rotations.[1] Calculate the propane gas flow rate using the recorded time and number of rotations (total flow in that time). Use the pressure and temperature readings to convert to standard conditions. Repeat this measurement for two additional meter setting to allow for calibrating the flowmeter throughout the range of interest. Plot the flow versus meter reading, fit a best line (possibly quadratic) through these points to find the meter setting for a flow of 12.9 LPM at the above ''standard'' conditions. Repeat this procedure for ''Burner 2'' using three meter readings to find the setting that gives a flow rate of 6.6 LPM at the standard conditions. After completion of the calibration, re-set the timers to 70 and 50 seconds.

Appendix B: Burner Operation Sequence

1. Starting point: AC power on (red knob out); propane pressure set to 20 psig at bottle; timers set to 70 s (top burner) and 50 s (side burner); flowmeters pre-set to values that give the requisite propane gas flow rates to each burner. Pilot tubes set just behind front surface of burners; pilot flow valves set for ca. 2 cm flames.

2. Position burner on test specimen and remove sheet metal platen.

[1] With a diaphragm test meter well-sized to this application, this should be more than five rotations. A one liter per rotation meter will require 10 to 15 rotations for the flow measurements and greater than the minimum of one minute recording time specified here.

3. Place screens around both burners.

4. Open pilot ball valves one at a time and ignite pilots with hand-held flame; adjust flame size if necessary being very careful to avoid a jet flame that could prematurely ignite the test specimen (Beware: after a long interval between tests the low pilot flow rate will require a long time to displace air in the line and achieve the steady-state flame size.)

5. Open both burner ball valves.

6. *Start test exposure* by simultaneously turning on power to both timers (timers will turn off burners at appropriate times).

7. Check/adjust propane flow rates (DO THIS ESSENTIAL TASK IMMEDIATELY. Experience shows the flow will not remain the same from test-to-test in spite of fixed valve positions so adjustment is essential.)

8. *After burners are out:*

a. Lift top burner and back assembly away from specimen.

b. Turn off power to both timers.

c. Remove screens.

d. Turn off pilots at their ball valves.

Dated: December 22, 2004.

Todd Stevenson,

Secretary, Consumer Product Safety Commission.

List of Relevant Documents

1. Briefing memorandum from Margaret Neily, Project Manager, Directorate for Engineering Sciences, to the Commission, ''Notice of Proposed Rulemaking for Mattress Flammability (Open Flame) and Options for Addressing Bedclothes Involvement in Mattress/Bedding Fires,'' November 1, 2004.

2. Memorandum from Allyson Tenney, ES, to Margaret Neily, Engineering Sciences, ''Background and Technical Rationale for Draft Proposed Standard for Open Flame Mattress Flammability,'' October 29, 2004.

3. Memorandum from Linda Smith and David Miller, EPI, ''Residential Fires Involving Mattresses and Bedding,'' October 2004.

4. Memorandum from Carolyn Meiers, ESHF, to Margaret Neily, Project Manager, ''Criteria for Judging Effectiveness of Proposed Mattress Standard,'' October 14, 2004.

5. Memorandum from Carolyn Meiers, ESHF, to Margaret Neily, Project Manager, ''Human Behavior in Fire,'' October 7, 2004.

6. Memorandum from Treye Thomas and Patricia Brundage, HS, ''Qualitative Assessment of Potential Risk from the Use of Flame Retardant Chemicals in Mattresses,'' October 25, 2004.

7. Memorandum from Robert Franklin, EC, to Margaret L. Neily, ES, ''Preliminary Environmental Assessment of a Draft Proposed Open-Flame Ignition Resistance Standard for Mattresses,'' October 21, 2004.

8. Memorandum from Soumaya Tohamy, EC, to Margaret Neily, Project Manager, ''Preliminary Regulatory Analysis of a Draft Proposed Standard to Address Open Flame Ignitions of Mattresses,'' October 27, 2004.

9. Memorandum from Soumaya Tohamy, EC, to Margaret Neily, Project Manager, ''Initial Regulatory Flexibility Analysis of a Draft Proposed Standard to Address Open Flame Ignitions of Mattresses,'' October 27, 2004.

10. Terrance R. Karels, EC, to Margaret L. Neily, ES, ''Updated Mattress Market Information,'' October 5, 2004.

11 Memorandum from Linda Smith EPI, ''Involvement of Bedclothes in Residential Mattress Fires,'' May 2004.

12. Terrance R. Karels, EC, to Margaret L. Neily, ES, ''Bedding Market Information,'' October 5, 2004.

13. Memorandum from Allyson Tenney, ES, to Margaret Neily, Engineering Sciences, ''Bedclothes Flammability,'' October 29, 2004.

14. Memorandum from Martha A. Kosh, OS, to ES, ''Standard to Address Open Flame Ignition of Mattresses/Bedding; ANPR,'' List of comments on CF 02–1, December 13, 2001.

15. Memorandum from Martha A. Kosh, OS, to ES, ''Standard to Address Open Flame Ignition of Mattresses/Bedding; ANPR (Revised),'' List of comments on CF 02–1, September 27, 2004.

16. National Research Council (2000). Toxicological Risks of Selected Flame-Retardant Chemicals (Washington, DC, National Academy Press).

[FR Doc. 05–416 Filed 1–12–05; 8:45 am]

BILLING CODE 6355–01–P

CONSUMER PRODUCT SAFETY COMMISSION

16 CFR Part 1634

Standard To Address Open Flame Ignition of Bedclothes; Advance Notice of Proposed Rulemaking

AGENCY: Consumer Product Safety Commission.

ACTION: Advance Notice of proposed rulemaking.

SUMMARY: The Commission is considering issuing a flammability standard that would address open flame ignition of bedclothes. (Commissioner Thomas H. Moore issued a statement, a copy of which is available from the Commission's Office of the Secretary or from the Commission's Web site, *http://www.cpsc.gov.*) Elsewhere in today's **Federal Register**, the Commission is proposing a flammability standard that addresses open flame ignition of mattresses/foundations. Research indicates that in mattress fires the mattress and bedclothes operate together as a system. Thus, the Commission believes that a flammability standard for bedclothes in addition to one for mattresses may be appropriate. The Commission invites comments concerning the risk of injury identified in this notice, the regulatory alternatives being considered, and other possible alternatives. The Commission also invites submission of any existing standard or statement of intention to modify or develop a voluntary standard to address small open flame ignition of bedclothes.

DATES: Comments and submissions must be received by March 14, 2005.

ADDRESSES: Comments should be mailed, preferably in five copies, to the Office of the Secretary, Consumer Product Safety Commission, Washington, DC 20207–0001, or delivered to the Office of the Secretary, Consumer Product Safety Commission, Room 502, 4330 East-West Highway, Bethesda, Maryland; telephone (301) 504–0800. Comments also may be filed by telefacsimile to (301) 504–0127 or by email to *cpsc-os@cpsc.gov*. Comments should be captioned ''Bedclothes ANPR.''

FOR FURTHER INFORMATION CONTACT: Margaret Neily, Directorate for Engineering Sciences, Consumer Product Safety Commission, Washington, DC 20207; telephone (301) 504–0508, extension 1293.

SUPPLEMENTARY INFORMATION:

A. Background

An existing flammability standard for mattresses addresses ignition of mattresses and mattress pads by cigarettes. 16 CFR Part 1632. On October 11, 2001, the Commission published an advance notice of proposed rulemaking (''ANPR'') addressing open flame ignition of mattresses. 66 FR 51886. That ANPR was the result of several years of evaluation by Commission staff and petitions on mattress flammability submitted by Whitney Davis, Director of the Children's Coalition for Fire-safe Mattresses. As explained in the ANPR, the Sleep Products Safety Council (''SPSC''), an affiliate of the International Sleep Products Association (''ISPA''), sponsored a research program at the National Institute of Standards and Technology (''NIST''). The NIST research program has provided a great deal of technical information about mattress fires, including the role of bedclothes in such fires.

As noted in the mattress ANPR, mattresses generally are not used alone, but are covered by bedding or bedclothes, whose presence significantly affects the character of the fire. In most incidents a small open flame initially ignites the bedding, and these materials serve as a larger ignition source for the mattress. Because few materials can resist such a large ignition source, the typical approach of preventing ignition of a mattress through a product performance standard may not be fully adequate for an open flame mattress standard. Therefore, the Commission has taken the approach in

its proposed mattress standard of limiting the fire intensity in order to minimize the possibility of or delay flashover for a period of time in mattress/bedding fires. Flashover occurs when a fire becomes so intense that all exposed surfaces ignite nearly simultaneously, and the fire quickly spreads through the structure.

In response to the mattress ANPR, the Commission received comments both in favor of the Commission regulating bedclothes and against such regulation. Those opposed to regulating bedclothes argued that bedclothes are an uncontrolled variable and there is no way to predict the type of bedclothes that may become involved in a fire incident. They also stated that there would be no objective method to determine if consumers were using regulated bedclothes, there is little data indicating that regulating some bedding items would have an impact on the hazard, and flammability performance should not be based on what consumers may (or may not) use as bedclothes. Those in favor of regulating bedclothes argued that bedclothes are a significant ignition source for mattress fires and significantly affect the burning characteristics of the mattress and foundation. They also asserted that bedclothes can generate a fire large enough to pose a hazard on their own, and that improving the flammability of certain bedclothes, such as filled items, is economically feasible.

As discussed below, the Commission believes that regulating bedclothes may be appropriate. Bedclothes contribute substantially to the complexity and magnitude of the mattress fire hazard. The NIST research has shown that, even with mattresses that would meet the Commission's proposed open flame mattress standard, certain bedclothes have produced near flashover conditions in laboratory tests.

B. The Products

The term ''bedclothes'' can include a variety of products, such as sheets, blankets, mattress pads, pillows, comforters, and similar products that are used as covering on a bed. Products that contain fibrous or other materials are called ''filled'' bedding. Because of their greater mass or fuel load, filled products are likely to contribute more significantly to a mattress fire than unfilled products, such as sheets and blankets. California's Bureau of Home Furnishings and Thermal Insulation (''CBHF'') has issued a draft Technical Bulletin 604 that specifies an open flame standard for filled bedding products. The draft TB 604 does not cover textiles, such as sheets, pillowcases and blankets. CBHF only regulates filled bedclothing.

At the present time, the Commission is not limiting this rulemaking to any particular bedclothes. The Commission intends that during the course of rulemaking it will evaluate continuing research to determine which bedclothes have the greatest impact on mattress fires. The Commission requests comments on particular bedclothes that should be included in or excluded from a proposed bedclothes standard.

At the request of CBHF, the American Textiles Manufacturers Institute (''ATMI'') conducted a survey in 2003 of its members about the U.S. market for filled bedding products. The 12 firms surveyed reportedly account for 80% of the U.S. market for these products. Although these firms are located in the U.S., many of their products are manufactured outside the U.S. According to U.S. Department of Commerce 2002 import statistics, perhaps 90% of all quilts and comforters, and perhaps 20% of all bed pillows are imported. According to the ATMI survey, the most common fill material for bedclothes is polyester (not flame-resistant). Some of the improved fill materials being developed for mattresses could also be used for bedclothes. Use of barrier fabrics or flame resistant outer fabrics are other approaches that could be used to improve fire performance of bedclothes.

A trade publication, ''Home Textiles Today,'' reported in its 2003 annual business issue that the top five firms marketing comforters and bedspreads sold about $1.1 billion in the U.S. in 2002, essentially unchanged from 2001. The top five makers of down comforters reported sales of about $303 million in 2002.

Mattress pads are constructed of the same types of foam used in mattresses and filled bedding products. They can also contribute significantly to mattress/bedding fires. Foam mattress pads may be made with a flat surface, an ''egg crate'' design, or with ''memory foam'' that contours to the body. Egg crate pads retail for $10 to $50 each. Industry sources estimate that perhaps 4 to 5 million egg crate pads are sold annually. Memory pads, which retail for $100 or more, sell about 3 million units annually.

C. Risk of Injury

The most recent national fire loss estimates indicated that mattresses and bedding were the first items to ignite in 19,400 residential fires attended by the fire service annually during 1995–1999 (based on data from the U.S. Fire Administration's National Fire Incident Reporting System data and the National Fire Protection Association's annual survey). These fires resulted in 440 deaths, 2,230 injuries and $273.9 million in property loss each year. Open flame ignition sources accounted for 35 percent of these fires and smoking material sources accounted for 30 percent of the fires. The remaining fires included a variety of ignition sources including heat sources too close to the bed. Based on these data alone, it is very difficult to determine whether the first item ignited was a mattress or an item of bedclothes.

The primary source for information on the involvement of various bedclothes items in mattress fires is CPSC's in-depth investigations. Staff analyzed 241 investigated fire incidents that occurred between January 2000 and June 2003. These investigations were based on a variety of initial sources, NEISS hospital emergency room reports, newspaper clippings, and fire department reports.

Unless someone witnessed the fire ignition, it was often difficult to determine whether the mattress or a bedclothes item, such as a pillow or blanket, ignited first. When the initial ignition was not observed and reported, staff determined what ignited first based on the reported scenario. For example, if a lamp fell on a blanket on the top surface of the bed, the incident was classified as igniting the blanket first. Based on this evaluation, it was determined that a non-electric bedclothes item ignited first in 190 of 235 fires (81 percent). However, in 75 percent of those bedclothes' ignitions it was not possible to determine the type of bedclothes involved. Among incidents for which a specific item was reported, sheets, blankets, and comforters/quilts were the items cited most frequently. Ignition sources included cigarette lighters (primarily children playing), candles, smoking materials, and other nearby heat sources. Although the investigations could not provide information on which types of bedclothes were more likely to ignite, they did show that most bedclothes items that were present did ignite at some point during the fire.

D. Statutory Provisions

Section 4 of the Flammable Fabrics Act (''FFA'') authorizes the Commission to initiate proceedings for a flammability standard when it finds that such a standard is ''needed to protect the public against unreasonable risk of the occurrence of fire leading to death or personal injury, or significant property damage.'' 15 U.S.C. 1193(a). That section also sets forth the process

by which the Commission can issue a flammability standard. The Commission first must issue an advance notice of proposed rulemaking (''ANPR'') which: (1) Identifies the fabric or product and the nature of the risk associated with the fabric or product; (2) summarizes the regulatory alternatives under consideration; (3) provides information about existing relevant standards and reasons why the Commission does not preliminarily believe that these standards are adequate; (4) invites interested persons to submit comments concerning the identified risk of injury, regulatory alternatives being considered, and other possible alternatives; (5) invites submission of an existing standard or portion of a standard as a proposed regulation; and (6) invites submission of a statement of intention to modify or develop a voluntary standard to address the risk of injury. 15 U.S.C. 1193(g).

If, after reviewing comments and submissions responding to the ANPR, the Commission determines to continue the rulemaking proceeding, it will issue a notice of proposed rulemaking. This notice must contain the text of the proposed rule along with alternatives the Commission has considered and a preliminary regulatory analysis. 15 U.S.C. 1193(i). Before issuing a final rule, the Commission must prepare a final regulatory analysis, and it must make certain findings concerning any relevant voluntary standard, the relationship of costs and benefits of the rule, and the burden imposed by the regulation. Id. 1193(j). The Commission also must provide an opportunity for interested persons to make an oral presentation before the Commission issues a final rule. Id. 1193(d).

E. Existing Open Flame Standards

Currently, there are no mandatory flammability requirements for residential bedclothes in the United States. A few voluntary standards apply to bedding items. ASTM D4151–92 (2001) measures ease of ignition and surface flame spread of blankets. Underwriters Laboratories (''UL'') has a standard for electric blankets. A European standard, ISO 12952—Textiles—Burning behaviour of bedding items, Parts 1–4, specifies a general test method for assessing the ignitability of bedding items. The test method calls for observation of progressive smoldering and/or flaming when a bedding specimen is exposed to a small propane burner. The test relates only to ignitability of the bedding material under the specific conditions of the test. None of these tests appears adequate to measure or address the specific hazard posed by a bedclothes item or its contribution to a residential mattress/bedding fire.

F. California's Rulemaking

In 2001, the California legislature passed Assembly Bill 603 (''AB 603''), which mandated that CBHF issue regulations by January 2004 that would require that mattresses and box springs meet a test for open-flame resistance. AB 603 also stated: ''If the bureau [CBHF] concludes that other bedding contributes to mattress fires, the regulations shall require the other bedding to be flame retardant under the resistance to open-flame test.'' Based on their own research and that conducted by NIST, CBHF determined that regulation of filled bedding products—such as comforters, pillows, and mattress pads—is necessary. CBHF has been working with a multi-disciplinary task force to develop a proposed standard for these bedding items. CBHF prepared a draft standard (TB 604) that was discussed in the Task Force in 2003. However, it was withdrawn because of technical problems with the test method. CBHF issued a new draft of the TB 604 standard on October 1, 2004, and scheduled a Task Force meeting for November 18, 2004, to discuss it. CBHF has stated that it expects to open formal rulemaking at the end of the year and hold hearings on the proposal in January or February 2005.

G. Technical Research on Bedclothes

As discussed in the mattress ANPR, several research projects have examined open-flame ignited mattress and bedding fires. Some of this research provides a better understanding of the contribution of bedclothes to these fires.

The Sleep Product Safety Council (''SPSC'') sponsored several phases of research at NIST. One of the focuses during Phase 1 was to evaluate the fire behavior of various combinations of bedclothes. Twelve different combinations of bedclothes sets ranging from very light (two sheets and a pillow) to heavy (two sheets, a pillow, a mattress pad, one blanket, and one heavy weight filled comforter) were burned on an inert, twin-size mattress made of fiberglass. The peak heat release rates varied from 50kW to 200kW. Combinations without a comforter were typically under 100kW. Peak heat release rate is basically a measure of the intensity of the fire produced by these items. Further tests were conducted on a range of combinations of bedclothes.

Part of Phase 2 of the NIST work included a limited assessment of bedclothes and their contribution to mattress fire hazards. The same set of bedclothes was used on mattresses of varying heat release rate performance. The bedclothes were tested with a king sized mattress that had contributed very little heat release rate in prior testing without bedclothes. The result was a peak heat release rate of 400kW, primarily from the bedclothes. While this scenario would not readily cause flashover, it is important to note that this result assumes little involvement from the mattress.

SPSC expanded its research at NIST to examine filled bedclothes (such as comforters, pillows, and mattress pads). This research tested bedclothes constructed of a variety of filling and cover materials to assess the effect of material changes on the flammability behavior. The study evaluated two design changes: One involved replacing polyester fiberfill with a modified, lower heat release fiber of a comparable loft; the other involved using a barrier-type cover to protect the polyester fiberfill. These design changes were examined using three different mattress and foundation designs: One representing current mattress/foundation construction and the other two using experimental, improved designs.

The report on this bedclothes study was published in February 2003, NIST Technical Note 1449. According to the NIST report, for a mattress standard to be most effective, the performance of the entire bedding system (that is, the mattress/foundation and the bedclothes) must be taken into consideration. The study showed that the bedclothes and the mattress/foundation function as a system and that the improved mattress pads, pillows and comforters resulted in major improvements in the performance of the system. This was indicated by a lower peak heat release rate or a longer time to peak.

A related research project conducted for CPSC by NIST reinforced one of the conclusions of the bedclothes study discussed above. A portion of the tests using conventional bedclothes showed that, as mattress designs improve, two separate peak heat release rates occur. The first observed peak appears to be dominated by the bedclothes, while the second is dominated by the mattress/foundation. Good mattress designs tended to have a peak heat release rate appreciably later in the test and comparable to or less than the peak dominated by the bedclothes.

A more recent study conducted for CPSC by NIST included a series of tests using the same bedclothes combination on twin, queen, and king size mattresses. The tests were conducted in

a room environment to evaluate any resulting room effects, which generally begin to occur at heat release rates of about 300 to 400kW. The early heat release rate peaks, driven primarily by burning bedclothes, tripled from twin size to king size. Larger size bedclothes combinations on good performing mattress designs (those with peak heat release rates less than 50kW when tested with burners and no bedclothes) showed heat release rate peaks up to 800 kW, occurring 7 to 8 minutes after ignition. This is much higher than rates allowed for mattresses/foundations under CPSC's proposed mattress standard. On mattress designs that yielded a moderate heat release rate peak with burners, the bedclothes resulted in more serious fires. This study shows that a combination of some bedclothes with even a well performing mattress/foundation (that would meet CPSC's proposed mattress standard) could still cause flashover in a room.

H. Invitation To Comment

In accordance with section 4(g) of the FFA, the Commission invites comments on this notice. Specifically, the Commission invites the following types of comments.

1. Comments concerning the risk of injury identified in this notice, the regulatory alternatives discussed above, and other alternatives to address the risk of injury;

2. The submission of an existing standard or portion of a standard as a proposed rule;

3. The submission of a statement of intention to modify or develop a voluntary standard to address the risk of injury identified in the notice along with a description of a plan to modify or develop the standard.

In addition, the Commission is interested in obtaining further information about the following issues that may influence the flammability of bedclothes.

1. Cleaning and laundering methods of bedclothes;

2. Frequency of cleaning or laundering of various bedclothes items over their useful lives.

Dated: December 22, 2004.

Todd Stevenson,

Secretary, Consumer Product Safety Commission.

List of Relevant Documents

1. Briefing memorandum from Margaret Neily, Project Manager, Directorate for Engineering Sciences, to the Commission, ''Notice of Proposed Rulemaking for Mattress Flammability (Open Flame) and Options for Addressing Bedclothes Involvement in Mattress/Bedding Fires,'' November 1, 2004.

2. Memorandum from Linda Smith, EPHA, to Margaret Neily, Engineering Sciences, ''Involvement of Bedclothes in Residential Fires Mattress Fires,'' May 2004.

3. Memorandum from Terrance R. Karels, EC, to Margaret L. Neily, ES, ''Bedding Market Information,'' October 5, 2004.

4. Memorandum from Allyson Tenney, ES, to Margaret Neily, Project Manager, ''Bedclothes Flammability,'' October 29, 2004.

[FR Doc. 05–415 Filed 1–12–05; 8:45 am]

BILLING CODE 6355–01–P

Federal Register

Thursday,
January 13, 2005

Part III

Department of Agriculture

Agricultural Marketing Service

7 CFR Part 927

Winter Pears Grown in Oregon and Washington; Recommended Decision and Opportunity To File Written Exceptions to Proposed Amendments to Marketing Agreement and Order No. 927; Proposed Rule

DEPARTMENT OF AGRICULTURE

Agricultural Marketing Service

7 CFR Part 927

[Docket No. AO–F&V–927–A1; FV04–927–1 PR]

Winter Pears Grown in Oregon and Washington; Recommended Decision and Opportunity To File Written Exceptions to Proposed Amendments to Marketing Agreement and Order No. 927

AGENCY: Agricultural Marketing Service, USDA.

ACTION: Proposed rule and opportunity to file exceptions.

SUMMARY: This recommended decision invites written exceptions on proposed amendments to the marketing agreement and order (order) for winter pears grown in Oregon and Washington. The amendments are jointly proposed by the Winter Pear Control Committee and the Northwest Fresh Bartlett Marketing Committee, which are responsible for local administration of orders 927 and 931, respectively. Marketing Agreement and Order No. 931 regulates the handling of fresh Bartlett pears grown in Oregon and Washington. The amendments would combine the winter pear and fresh Bartlett orders into a single program under marketing order 927, and would add authority to assess pears for processing. All of the proposals are intended to streamline industry organization and improve the administration, operation, and functioning of the program.

DATES: Written exceptions must be filed by February 14, 2005.

ADDRESSES: Written exceptions should be filed with the Hearing Clerk, U.S. Department of Agriculture, room 1081–S, Washington, DC 20250–9200, Facsimile number (202) 720–9776 or *www.regulations.gov.* All comments should reference the docket number and the date and page number of this issue of the **Federal Register**. Comments will be made available for public inspection in the Office of the Hearing Clerk during regular business hours, or can be viewed at: *http://www.ams.usda.gov/fv/moab.html.*

FOR FURTHER INFORMATION CONTACT: Melissa Schmaedick, Marketing Order Administration Branch, Fruit and Vegetable Programs, Agricultural Marketing Service, USDA, Post Office Box 1035, Moab, UT 84532, telephone: (435) 259–7988, fax: (435) 259–4945.

Small businesses may request information on this proceeding by contacting Jay Guerber, Marketing Order Administration Branch, Fruit and Vegetable Programs, AMS, USDA, 1400 Independence Avenue SW., Stop 0237, Washington, DC 20250–0237; telephone: (202) 720–2491, fax: (202) 720–8938.

SUPPLEMENTARY INFORMATION: Prior documents in this proceeding: Notice of Hearing issued on March 24, 2004, and published in the March 30, 2004, issue of the **Federal Register** (69 FR 16501).

This action is governed by the provisions of sections 556 and 557 of title 5 of the United States Code and is therefore excluded from the requirements of Executive Order 12866.

Preliminary Statement

Notice is hereby given of the filing with the Hearing Clerk of this recommended decision with respect to the proposed amendment of Marketing Agreement and Order 927 regulating the handling of winter pears grown in Oregon and Washington, and the opportunity to file written exceptions thereto. Copies of this decision can be obtained from Melissa Schmaedick, whose address is listed above.

This recommended decision is issued pursuant to the provisions of the Agricultural Marketing Agreement Act of 1937, as amended (7 U.S.C. 601 *et seq.*), hereinafter referred to as the Act, and the applicable rules of practice and procedure governing the formulation of marketing agreements and orders (7 CFR part 900).

The proposed amendments are based on the record of a public hearing held on April 13 and 14, 2004, in Yakima, Washington and on April 16, 2004, in Portland, Oregon. Notice of this hearing was published in the **Federal Register** on March 30, 2004 (69 FR 16501). The notice of hearing contained order changes proposed by both the Winter Pear Control Committee and the Northwest Fresh Bartlett Marketing Committee, which are responsible for local administration of orders 927 and 931, respectively. Marketing order 927 regulates the handling of winter pears grown in Oregon and Washington. Marketing order 931 regulates the handling of Bartlett pears in the same production area.

At a joint meeting of the Winter Pear Control Committee and the Northwest Fresh Bartlett Pear Marketing Committee on November 13, 2003, both Committees voted unanimously to recommend amendments to Marketing Order 927. The amendments are intended to streamline industry and program organization by placing both Marketing Order 927, regulating the handling of winter pears, and Marketing Order 931, regulating the handling of Bartlett pears, under one program: Marketing Order 927. If this proposal were implemented, Marketing Order 931 would be terminated. The amendments would also add pears for processing to the order, and would update various provisions of the order.

The Committees proposed amendments to marketing order 927 include:

1. Expanding the definition of pears to include all varieties of pears classified as summer/fall pears in addition to winter pears; adding Concorde, Packham, and Taylor s Gold pears to the current list of winter pear varieties; and adding a third category of pears which would include varieties not classified as summer/fall or winter pears. This amendment would extend program coverage to all pears grown in Oregon and Washington.

2. Revising the definition of size to include language currently used within the industry.

3. Extending the order's coverage to pears for processing by revising the definition of handle, and adding definitions of processor and process.

4. Establishing districts for pears for processing. This amendment would divide the order s production area into two districts for pears for processing: one being the State of Oregon and the other being the State of Washington.

5. Dissolving the current Winter Pear Control Committee and establishing two new administrative committees: the Fresh Pear Committee and the Processed Pear Committee (Committees). This proposal would add a public member and public alternate member seat to both of the newly established Committees and would remove Section 927.36, Public advisors. The Committees would coordinate administration of Marketing Order 927, with each Committee setting assessments and administering program functions specific to their commodity. Coordinated administration would allow each Committee to make decisions on behalf of the commodity they represent, yet combine administrative functions, when applicable, to maximize efficiencies and minimize program costs.

Additionally, related changes would be made to order provisions governing nomination and selection of members and their alternates, terms of office, eligibility for membership, and quorum and voting requirements, to reflect the proposed dual committee structure.

6. Authorizing changes in the number of Committee members and alternates, and allowing reapportionment of committee membership among districts and groups (*i.e.*, growers, handlers, and

processors). Such changes would require a Committee recommendation and approval by the Department.

7. Adding authority to establish assessment rates for each category of pears, including: Summer/fall pears, winter pears, and all other pears. In addition, rates of assessment could be different for fresh pears and pears for processing in each category, and could include supplemental rates on individual varieties.

8. Adding authority for container marking requirements for fresh pears.

9. Removing the order provision allowing grower exemptions from regulation. This is a tool no longer used by the industry and, thus, is considered obsolete.

10. Amending § 927.70, Reports, to update order language regarding confidentiality requirements to conform to language under the Act.

11. Clarifying inspection requirements and adding authority to eliminate those requirements if an alternative, adequate method of ensuring compliance with quality and size standards in effect under the order can be developed.

12. Eliminating the current exemptions for pears for processing and for pears shipped to storage warehouses.

13. Providing that separate continuance referenda be held every 6 years for fresh pears and processing pears.

14. Adding the authority for the Committees to conduct post-harvest research, in addition to production research and promotion (including paid advertising).

15. Updating several order provisions to make them more current.

16. Revising order provisions to reflect the two-committee structure being recommended for administration of the program.

Twenty-one industry witnesses testified at the hearing. These witnesses represented fresh winter and summer/fall pear producers and handlers, and processors of summer/fall pears in the production area. All witnesses supported the Committees recommended changes; no opposition was present at the hearing.

Witnesses addressed the need to simplify the operations of the Northwest pear industry by combining the activities of the fresh winter pear, the fresh summer/fall pear and the processed pear industries under a single federal marketing order. Witnesses stated that the proposed amendments would streamline pear industry activities, including assessment collection, administration, regulation, promotion, and research. The three industries are currently regulated under two Federal marketing orders and two State commissions. If this proposal were implemented, the two federal programs would be combined under one federal program that would also assume functions similar to those under the current state programs. Witnesses stated that the state programs would likely be dissolved if this proposal were implemented.

Witnesses explained that the proposal would require expanding the definition of pears under 927 to include all varieties of pears grown in the production area. The proposed amendments would also include revising the definition of handle, and adding definitions for process and processor.

Witnesses stated that expanding the scope of the order to include pears for processing would require a restructuring of the order s administrative committee. The new committee structure would include one committee with oversight for all fresh pear activities, and a second committee with oversight for all activities related to pears for processing. Additionally, witnesses spoke in favor of amending order provisions governing nomination and selection of members and their alternates, terms of office, eligibility for membership, and quorum and voting requirements to reflect the proposed dual committee structure.

The order's production area, the States of Oregon and Washington, would remain the same under the proposed amendments. However, the subdivision of the production area into districts would be different for pears for processing than for fresh pears. While four districts would be established for fresh pears, pears for processing would only have two districts: the State of Oregon and the State of Washington.

Witnesses also proposed adding a public member and public alternate member seat to both of the newly established committees. The public member and his or her alternate would be residents of the production area, and would have no financial ties to the production, handling or processing of pears. Witnesses stated that this proposal would also result in the removal of § 927.36, Public advisors, as unnecessary, since the public advisors would be replaced by public members of the committees.

Witnesses favored adding authority to the order to allow the committees, each independently, to recommend changes in the number of committee members and alternates of each committee, as well as recommend reapportionment of committee membership among districts and groups (*i.e.*, growers, handlers, and processors). Witnesses stated that this authority would allow the committees more flexibility in responding to industry changes over time that may merit adjustments in committee structure. These recommendations would be based on an assessment of several industry indicators and would require approval by the Department.

Witnesses stated that the order's assessment structure should also be revised. Specifically, witnesses advocated adding authority to establish assessment rates for each category of pears, including: Summer/fall pears, winter pears, and all other pears. In addition, rates of assessment could be different for fresh pears and pears for processing in each category, and could include supplemental rates on individual varieties. The Fresh Pear Committee would recommend assessment rates for fresh pears and the Processed Pear Committee would recommend assessment rates for pears for processing.

Proponents of this amendment stated that authority to establish assessment rates by category would allow the committees to maintain different assessment levels for each category of Northwest pears (based on different budget needs), as well as providing the committees with additional flexibility through the ability to apply supplemental rates of assessments for individual varieties within each category. Supplemental rates would be used to fund specific research or promotional efforts for individual varieties, whereas categorical assessment rates would be used to fund activities for an entire category of pears.

Witnesses explained that authority for production research and promotion, including paid advertising, currently exists under marketing order 927. Expanding the order's definition of pears to include summer/fall varieties and pears for processing would extend those authorities to all Northwest pears.

In addition, witnesses stated their support for adding the authority to conduct post-harvest research. Post-harvest research could include activities such as storage and treatment of pears between the field and the marketplace. Proponents stated that the authority for production and post-harvest research, and promotion activities including paid advertising, would enhance the order's ability to support Northwest pear growers, handlers and processors.

In discussing the order's authority to regulate fresh pears, witnesses supported adding authority to establish container marking regulations. Witnesses stated that this authority, which could include the use of generic industry logos, would provide the

industry with a marketing tool to enhance the presentation of fresh Northwest pears in the marketplace.

Witnesses also advocated adding authority to recommend modification or elimination of inspection requirements provided that an alternative method of ensuring compliance with quality and size standards were developed. Any alternative system would have to be approved by the Department through the rulemaking process.

Witnesses stated their approval of the Committees' recommendations to: Eliminate the current exemption for pears for processing and for pears shipped to storage warehouses as this provision is considered obsolete; remove the order provision allowing grower exemptions from regulation as this tool is also no longer used by the industry; and, amend § 927.70, Reports, to add confidentiality provisions of the order concerning the handling of information provided to the Committees and to specify in the order provisions that handlers maintain records for at least two years.

Finally, witnesses supported requiring continuance referenda as a means of determining grower sentiment on the order's operations. As proposed, separate continuance referenda would be held every 6 years for the fresh pear and processing pear provisions of the order (each independently).

At the conclusion of the hearing, the Administrative Law Judge stated that the final date for interested persons to file proposed findings and conclusions or written arguments and briefs based on the evidence received at the hearing would be June 1, 2004. The deadline was subsequently extended to June 16, 2004. One brief on behalf of the joint Winter Pear Control Committee and the Northwest Fresh Bartlett Marketing Committee was filed. The brief contained an overview of the industry's proposals and reiterated support for amending the order.

Material Issues

The material issues presented on the record of hearing are as follows:

(1) Whether to amend the definition of ''pears'' to include all varieties of pears grown in the production area;

(2) Whether to revise the definition of ''size'' to reflect current industry usage of the term;

(3) Whether to add authority to regulate pears for processing, by revising the definition of ''handle'', and adding definitions of ''processor'' and ''process'';

(4) Whether to establish districts for pears for processing;

(5) Whether to terminate the current Winter Pear Control Committee, to establish two new administrative committees (the Fresh Pear Committee and the Processed Pear Committee), to add a public member and public alternate member seat to both of the newly established committees, to remove § 927.36, Public advisors, and to make related changes to order provisions governing nomination and selection of members and their alternates, terms of office, eligibility for membership, and quorum and voting requirements;

(6) Whether to add authority for the proposed committees to recommend changes in the number of committee members and alternates, and the allocation of membership among groups and districts;

(7) Whether to add authority for the committees to recommend rates of assessment for pears by category (summer/fall pears, winter pears, and all other pears) and supplemental rates of assessment by variety;

(8) Whether to add authority for container marking requirements for fresh pears;

(9) Whether to remove § 927.54, Exemption Certificates, which allows grower exemptions from regulations;

(10) Whether to amend § 927.70, Reports, to add confidentiality provisions concerning the handling of information provided to the Committees and to specify in the order provisions that handlers maintain records for at least two years;

(11) Whether to add authority to recommend modification or elimination of inspection requirements, provided that an alternative, USDA approved method of ensuring compliance with order quality and size standards could be used;

(12) Whether to eliminate current exemptions for pears for processing and for pears shipped to storage warehouses;

(13) Whether to provide that separate continuance referenda be held every 6 years for fresh pears and processing pears;

(14) Whether to add authority for the proposed committees to conduct post-harvest research, in addition to production research and promotion (including paid advertising); and

(15) Whether to update several order provisions to make them more current.

Findings and Conclusions

The following findings and conclusions on the material issues are based on evidence presented at the hearing and the record thereof.

Material Issue Number 1—Revision of the Definition of Pears

Section 927.4 of the order should be amended to include all varieties of pears grown in the States of Oregon and Washington. This amendment would entail adding a category for all pear varieties characterized as summer/fall varieties, and would add the Concorde, Packham and Taylor s Gold varieties to the current list of pear varieties characterized as winter pear varieties. In addition, a third category of pears should be added that would include all varieties not classified as summer/fall or winter pears, that are grown within the production area.

The winter pear order currently defines pears as any and all of the Beurre D'Anjou, Beurre Bosc, Winter Nelis, Doyenne du Comice, Forelle, and Seckel varieties of pears. It also includes any other varieties or subvarieties characterized as winter pears that are grown in the production area and are recognized by the committee and approved by the Department.

The proposed amendment would broaden the scope of Federal marketing order 927 to cover all pears produced within the production area. Witnesses stated that without this proposed change in the definition of pears covered by marketing order 927, all other proposed amendments would not be possible as they entail bringing the fresh winter and summer/fall pear industries and the processed pear industry under one Federal regulatory program.

According to the record, there are eight principal varieties of pears grown in the States of Washington and Oregon. These pear varieties are split into categories of summer/fall and winter pears. These references stem from the differences in the crop harvest and marketing cycles of the different varieties.

Winter pears, such as the red and green Anjou, Bosc, Comice, Seckel, Forelle, Concorde, Packham and Taylor's Gold varieties, are typically harvested in early September. Winter pear varieties are generally able to be stored longer than summer/fall varieties, and thus can be sold throughout the winter, spring and summer. The marketing season for Comice, Seckel, and Forelle generally runs through April. The marketing season for Bosc pears extends into May, and Anjou pears can be available into July or later.

Summer/fall varieties include the Bartlett and Starkrimson pear varieties. Summer/fall pears are harvested in late summer and are marketed throughout the fall, sometimes into January. Bartlett

pears can either be red or green, with the green Bartlett being more prevalent in the marketplace. Bartlett pears are also the variety of pear that is most commonly used for processing. The Starkrimson variety is a summer/fall variety that has recently become more important in the overall volume of pear production in Oregon and Washington.

Witnesses also indicated that establishing an ''other'' category would be prudent in the event that future varieties of pears were developed that do not fall into the other established categories. The industry would gain flexibility in responding to new developments in the Oregon and Washington pear industry by providing for the structure to classify such pears appropriately for program purposes. This would allow the industry to avoid having to pursue amendment of the marketing order in the future, if new varieties of pears are developed that are not considered winter or summer/fall pears.

USDA is also recommending that § 927.4, the definition of pears proposed by industry, be revised to include language stating that all pears with the genus name ''Pyrus'' produced within the production area would be included under the order. This language was also included in the brief filed by the joint Winter Pear Control Committee and the Northwest Fresh Bartlett Marketing Committee in support of the proposed amendments to marketing order 927. Accordingly, USDA recommends revising § 927.4, Pears, to include the genus name ''Pyrus'' in the definition.

Witnesses stated that this proposed amendment would provide the basis for many of the other proposed amendments discussed later in this document. The industry intends to expand the scope of Federal marketing order 927 to include all varieties of pears grown in Oregon and Washington, to regulate both fresh pears and pears for processing, as well as to establish two administrative committees for local oversight and administration of the order. In order to effectuate these changes, the definition of pears needs to be amended to provide authority to regulate all pears under one order. This would be accomplished by amending the order's definition of pears.

Witnesses explained that the winter, summer/fall, fresh and processed pear industries are closely inter-related. Growing, harvesting, packing, processing and marketing activities of all of these industries impact each other to the extent that regulating them under one Federal marketing order would be logistically beneficial for the Oregon and Washington pear industry. Proponents of this amendment stated that this amendment, in conjunction with the proposed amendments discussed in later material issues, would help to improve the orderly marketing of product within the industry.

To illustrate the interaction of the different pear industries, witnesses used the example of a large crop of Bartlett pears. In this example, communication between the fresh and processing sides of the pear industry would be helpful in assuring timely movement of a perishable product and maximizing returns for that product. Crop estimates and harvest information, for example, could be shared between the fresh and processed committees to anticipate market distribution strategies for the large crop. The committees would facilitate information sharing at the administrative, grower and handler levels to enhance coordination of fresh and processed industry activities. For example, potential overflow from the fresh market needs to be able to move efficiently to the processed industry in order to prevent loss of product. Timely movement of a perishable product is essential to securing the highest grower return for that product.

Similarly, witnesses stated that regulating all varieties of pears (winter and summer/fall) under one marketing order would synchronize activities and facilitate inter-industry discussions and decision-making.

There was no opposition testimony on this issue. For the above reasons, it is recommended that section 927.4 be amended to include all pears characterized as winter and summer/fall varieties and subvarieties grown within the production area. A category for all pears not classified as either winter or summer/fall pears should also be established. USDA recommends including a reference to the genus name ''Pyrus'' as part of this definition.

A conforming change is needed in the title of 7 CFR Part 927. It is proposed to be revised to ''Pears Grown in Oregon and Washington'' to reflect the fact that the program no longer would cover only winter pears.

Material Issue Number 2—Revision of the Definition of Size

Section 927.5, Size, should be revised to reflect contemporary definition of the term as used by the industry today.

Witnesses explained that the current definition of ''size'' in the order is outdated as it defines size according the number of pears that can be packed in a standard western pear box. A standard western pear box is described as a box that is 18 inches long, 11½ inches wide and 8½ inches deep. At the time marketing order 927 was established, the standard western pear box was the common receptacle used for packing fresh pears. Over time, different forms of packing containers with different dimensions have evolved. Thus, this definition no longer accurately reflects the variety of containers used within the industry.

Alternatively, witnesses proposed that the definition be revised to include language describing a 44-pound net weight standard box or container equivalent. According to the record, industry currently describes a 44-pound box as a standard container, and uses this definition to measure crop size and changes in crop volumes from year to year.

Witnesses also explained that, given the proposal to add authority to regulate pears for processing to the order, a size definition solely based on a fresh pear packing box would not be appropriate. Witnesses proposed a size definition that would also include a physical measurement: The greatest transverse diameter of the pear taken at right angles to a line running from the stem end. Proponents of the revised definition stated that a diameter-based definition would accurately describe pear sizes in both the fresh and processed pear industries, and would more accurately reflect current sizing procedures and technology. As one witness stated, the physical description for measuring pears provides the basis for determining what size actually goes into a box. Representatives from the pear processing industry also explained that processors require a minimum-diameter size of 2¼ inches for pears for processing. Thus, the revised definition of size would better reflect current practices of both industries.

There was no opposition testimony on this issue. For the above reasons, it is recommended that § 927.5, Size, be revised to more accurately reflect the contemporary definition used within the industry.

Material Issue Number 3—Adding Authority to Regulate Pears for Processing

Federal marketing order 927 should be amended to include authority to regulate pears for processing by revising § 927.7, Handler, and § 927.8, Ship or handle. These terms should be amended to include persons receiving pears for processing. In addition, definitions of ''processor'' and ''process'' should be added to the order to further clarify the amended terms ''handler'' and ''ship or handle.''

The order currently does not include authority to regulate pears for

processing. However, the regulation of pears for processing is authorized under the Act and, therefore, can be added as a provision of marketing order 927. Given the proposal described in Material Issue 1, revising the definition of ''pears,'' the authority to regulate pears for processing would apply to all pear varieties grown in the states of Oregon and Washington.

There are five processing plants in the production area, with one in Oregon and four in Washington. Seventy five percent of the processing tonnage produced within the production area originates from the State of Washington, with 73 percent of the total located in the Yakima area. Processed pear production totaled 842.2 million pounds in the 2001/2002 crop year, compared to 1086.3 million pounds of fresh pear production in the same year.

According to the hearing record, adding authority to regulate pears for processing would complement the Oregon and Washington pear industries' desire to coordinate and streamline industry-wide research, promotion, and administrative activities. To accomplish this, the definition of ''handle'' should be expanded to include receiving pears for processing. Processing would be defined as canning, reducing to concentrate, freezing, dehydrating, pressing or pureeing pears, or in any other way converting pears commercially into a processed product. A processor would be any person who commercially processes pears.

Most pear producers within the production area produce both winter and summer/fall pear varieties for both the fresh and processed product markets. Record evidence indicates that the fresh and processed product markets compliment each other, as the latter provides a market for product that cannot be profitably distributed in the fresh market. Combining the activities of the fresh and the processed pear industries under a single Federal marketing order would facilitate communication among industry participants and would allow for more efficient marketing and research.

Representatives of the processed pear industry testifying at the hearing stated their support for adding authority to regulate pears for processing under the order. Witnesses stated that a Federal marketing order would provide a stable, unified, and constant vehicle to accomplish industry production and marketing objectives, mainly promoting consumption of fresh and processed Northwest pears, and increasing grower returns. Witnesses expanded on the many benefits they believed would result from collective industry action, and stated that coordination of marketing and research efforts is essential to maintaining market share in an increasingly competitive marketplace. Moreover, witnesses explained that combining fresh and processed pear activities under one program would represent a natural progression of the long-existing cooperation between the two industries.

According to the record, pear growers in Oregon and Washington have a 50-year history of dedicated funding to promote canned pears to consumers and foodservice users. Formal support of the processed pear industry began in 1954 with the establishment of the Pacific Northwest Canned Pear Service (PNCPS), a non-profit marketing organization funded through voluntary grower assessments.

The PNCPS continues to operate under the direction of growers from Washington and Oregon through two State grower organizations: the Washington State Fruit Commission and the Oregon Bartlett Pear Commission. The two State organizations annually approve a budget based on a per-ton assessment on pears delivered to processors. This mandatory assessment is collected from shippers and processors by both organizations, and provides the funds for the PNCPS to operate through an annually approved contract.

Due to the mandatory collection of marketing dollars from Washington and Oregon Bartlett pear growers who sell their tonnage for processing, all of those growers are members of the PNCPS. Each of the two State grower organizations appoints board members to the PNCPS board of directors.

In addition, processor members pay an annual associate membership fee and pay assessments on pears transported to the Northwest for processing from California, Idaho, or Canada. Associate processor members include all five pear processors operating in the production area.

Witnesses testified, if implemented, the proposal to include regulatory authority for pears for processing could lead to the dissolution of the two State commissions. Collection of assessments and administration of the marketing order program would become the responsibility of the proposed Processed Pear Committee, described and discussed under Material Issue 5.

Witnesses did not expect the proposed change in the structure of processed pear organizations to result in a change to the combined federal and state assessments that handlers are currently paying. The proposed amendment is expected to result in a reorganization of entities representing processed pear interests, reducing the number of regulatory entities from two to one. Assessment collection would be simplified, but the level of assessment is not expected to increase or decrease significantly. According to the hearing record, current assessments equal roughly $5 per ton of pears received for processing.

Handler assessments would be levied on the first individual receiving pears from the producer for packing or processing. For example, if a producer were to transport pears directly to a processor, that processor would be considered the first handler and would be responsible for submitting the appropriate assessment to the administrative committee. If a producer delivers pears to a packinghouse, where pre-sizing or grading for fresh market may take place prior to selecting tonnage to be directed to the processor, then the packinghouse would be considered the first handler and would be responsible for the assessment amount due. If a producer were to deliver pears to a packinghouse or processing facility outside of the production area, then the producer would be considered the first handler. The definition of handler would exclude any person receiving pears solely for the purpose of transporting them to a packinghouse or processor, such as a contract carrier.

Subject to approval by the Department, Federal processed pear assessments could be allocated to a promotional organization to conduct promotional activities on a contract basis, much like the current contractual arrangement between the PNCPS and the State commissions. Record evidence demonstrated that promotional activities, such as consumer education campaigns, distributor rebate programs, and other marketing, such as recipe development, have helped to sustain a stable market share for processed pears. In spite of increasing competition from imported pears and a growing preference among consumers for take-out or fast food meal service, demand for processed pear products has remained relatively stable over the past three decades.

The record evidence shows that over the last three years, imported canned pears have become an increasingly competitive challenge to the Northwest canned pear industry. Witnesses cited imports from China, South Africa and Australia as the industry's top three foreign competitors, with imported product accounting for nearly 10 percent of domestic canned pear sales. Promotional activities geared towards

large-volume end users, including school foodservice, health care, and other on-site foodservice operators and distributors, have helped the Northwest processed pear industry to maintain a stable share of these market sectors. Witnesses stated that incorporating processed pears under the Federal marketing order for Oregon and Washington pears would assist the industry and assure that promotional activities continue to receive coordinated industry support.

Information presented at the hearing suggests that over the past century a number of factors have converged to change consumer food consumption patterns and encourage the emerging dominance of food service over the retail sector. In an increasingly demanding work-life environment, many consumers are becoming increasingly dependent on dining out or purchasing prepared foods. With consumers turning to foodservice with their food dollars, canned pear consumption has moved away from the home and into foodservice operations.

As a result, representatives from the PNCPS explained that current promotional activities related to this sector are largely oriented towards consumer education and public relations efforts via food editors and nutrition professionals, and consumer retail promotion. According to the record, consumer promotion efforts, including lifestyle brochures, newspaper recipe releases and consumer newsletters, have helped to stabilize home consumption.

While witnesses stated that promotional activities are essential to the continued vitality of the processed pear industry, they also expressed their view that grade and size regulatory authority for processed pears should not be included under the order. In other words, supporters of this proposal only favored regulatory oversight of the collection of assessments on pears for processing for the use of funding research and promotion. This amendment would not include authority to establish grade and size regulations for pears for processing.

Representatives from the processed pear industry stated that during the drafting of the proposal to amend marketing order 927 to include pears for processing, processors were polled by members of the Winter Pear Control Committee regarding support for grade and size regulatory authority. Given that the processed pear industry currently operates under established USDA grades and standards, processors opted against including this authority in the proposed amendment. When asked at the hearing if such authority might be desirable at some point in the future, processors responded that they would be prepared to pursue amendment of the order at such time. Thus, authority for grade and size regulation is not included as part of this proposal.

Based on the record testimony and the reasons outlined above, § 927.7, Handler, and § 927.8, Ship or handle, should be amended to include the activity of receiving pears for processing. In addition, two new definitions should be added to the order: § 927.14, Processor, and § 927.15, Process. No opposition to these proposed amendments was presented at the hearing.

Material Issue Number 4—Districts

Section 927.11, Districts, should be amended to include two sets of representative districts: one for fresh pear production and one for processed pear production. This section of the order needs to be revised to reflect the proposed establishment of two administrative committees: the Fresh Pear Committee and the Processed Pear Committee, discussed in Material Issue 5. The geographic boundaries of the total production area under Marketing Order 927, which includes the states of Oregon and Washington, would not change.

Marketing order 927 currently defines four districts for fresh winter pear production. Given the proposal to expand marketing order coverage to all varieties of pears produced and handled in the fresh and processed pear industries of Oregon and Washington, these representative districts need to be adjusted. The proposed amendment would retain a four-district division of the production area for fresh pear production, but would slightly modify the current district boundaries to reflect the addition of summer/fall pear varieties. In addition, two districts for processed pears would be established. These would be defined along State boundary lines, with Oregon as one district and Washington as the other.

The current Winter Pear Control Committee consists of 12 members allocated among 4 geographic districts: Medford, Yakima, Mid-Columbia and Wenatchee. The Medford and Yakima Districts each have one grower and one handler member, and the Mid-Columbia and Wenatchee Districts each have two grower and two handler members. There is also a non-voting public advisor.

The current Northwest Fresh Bartlett Marketing Committee, which represents Oregon and Washington summer/fall fresh production, has 14 members allocated among 4 districts: Medford, Yakima, Mid-Columbia and Wenatchee. The Medford and Yakima Districts each have two grower and two handler members, and the Mid-Columbia and Wenatchee Districts each have two grower and one handler members. There is also one non-voting public advisor.

Geographically, these districts are nearly identical to the winter pear districts, with the exception of the division of production along the Columbia River Gorge and southern Oregon. The differences in district committee representation reflect the regional differences in summer/fall pear production and winter pear production.

According to the record, the proposed Fresh Pear Committee districts are based on the existing structure of the Winter Pear Control Committee, which has been updated several times and which accurately represents the interests of the fresh summer/fall pear industry. The proposed fresh district structure also borrows from the Northwest Fresh Bartlett Marketing Committee in that it divides the State of Washington along a more logical division of County lines.

The proposed districts for the Fresh Pear Committee are as follows: The Medford District would include all of the Counties in the State of Oregon except for Hood River and Wasco Counties; the Mid-Columbia District would include Hood River and Wasco Counties in the State of Oregon and the Counties of Skamania and Klickitat in the State of Washington; the Wenatchee District would include the Counties of King, Chelan, Okanogan, Douglas, Grant, Lincoln, and Spokane in the State of Washington, and all other Counties in Washington lying north thereof; and, the Yakima District would include all of the State of Washington not included in the Wenatchee District or in the Mid-Columbia District.

Record evidence indicates that the most significant change in the proposed fresh pear district structure occurs in Oregon, with fresh pear representation being shifted from the Mid-Columbia District to the Medford District. Witnesses explained that growers from this area specifically asked to be included in Medford instead of Mid-Columbia to better reflect the distribution of fresh production in Oregon. The shift in district boundaries would also result in more opportunities for industry members from this region to participate as members of the committee.

According to the record, there are roughly 350 fresh pear producers in Hood River County, Oregon, and less than 40 fresh pear producers in Medford County, Oregon. The area subject to the proposed shift in district boundaries is

known as the Willamette Valley region and has less than 40 fresh pear producers. Given the distribution of fresh pear producers in Oregon, the proposal to merge Willamette Valley producers into the Medford District would improve representation of that area on the committee. The Medford Districts average annual production of winter pears has decreased over the past five years by approximately 10.8 percent, or from 1.127 million boxes (10 year average) to 1 million boxes (five year average). Average annual production of summer/fall pear varieties over the same time period has fallen 13 percent, from 269 thousand boxes (10 year average) to 234 thousand boxes (five year average). At the time, average annual production of summer/fall varieties in the Mid-Columbia District have increased by nearly 10 percent, growing from 868 thousand boxes (10 year average) to 951 thousand boxes (5 year average). Mid-Columbia average annual production of winter pears has remained fairly stable over this period, decreasing by only one half of a percent. Thus, expanding the Medford District would allocate a portion of the current Mid-Columbia District production to that district, and would expand the pool of Medford District industry representatives eligible to serve on the committee.

The proposal to redefine Wenatchee District to include King, Grant and Lincoln Counties, and all other Counties in Washington lying north thereof, is also the result of a shift in boundary lines. The total amount of commercial fresh production represented in this district would not significantly change. However, the re-designation would allow for a better division of production between districts in Washington if production in the northern part of the State were to grow in the future. Witnesses stated that under the proposed district boundaries the State of Washington would be divided geographically into two districts.

The proposed fresh pear district boundaries and corresponding allocation of committee member representation, discussed in Material Issue 5, are also validated by seasonal production summaries. A review of production statistics by district covering 10 years presented at the hearing indicate that the Wenatchee and Mid-Columbia Districts are the largest producers of both fresh winter and summer/fall varieties, and therefore merit a larger committee representation than the Medford and Yakima Districts. The proposed district boundaries offer a more accurate geographical representation of fresh pear production in the States of Oregon and Washington and more fairly gauge regional production differences.

According to the record, processed pear production has historically been identified by Oregon and Washington State boundaries. Representation of processed pear industry interests and collection of mandatory State assessments have been conducted by respective State commissions: the Oregon Bartlett Pear Commission in Oregon and the Washington Stone Fruit Commission in Washington.

The proposed Processed Pear Committee, further discussed under Material Issue 5, would initially be made up of 10 members allocated between 2 districts. One district would encompass the entire State of Washington. Because processed pear production in this district would represent 75 percent of total processed pear production in the production area, committee member representation would include two grower members, two handler members and two processor members.

The other district would encompass the State of Oregon and would be allocated committee representation of one grower member, one handler member, and one processor member. (The public member would represent the production area at-large.) This proposed structure meets the existing language in the Act, which requires representation of processors and producers to be equal.

Growers and processors testifying at the hearing stated their support for the proposed processed pear districts and indicated that representation by State offered an equitable division of production interests on the proposed administrative committee. While Oregon only represents 25 percent of total production area production, witnesses agreed that the entire State should be included in the same district to provide the Oregon processed pear industry a separate district.

Given the record evidence and the reasons outlined above, USDA recommends that § 927.11, Districts, be amended as proposed. This amendment would create two sets of representative districts under the order: one for fresh pears and one for processed pears. The proposed amendment reflects current industry operations and ensures equitable representation of producers, handlers and processors of pears in the States of Oregon and Washington. No opposition to this proposal was given at the hearing.

Material Issue Number 5—Termination of the Winter Pear Control Committee and Establishment of the Fresh Pear Committee and the Processed Pear Committee

The marketing order should be amended to create two administrative committees: the Fresh Pear Committee and the Processed Pear Committee. Conforming changes should be made for all sections related to committee establishment, nomination, selection, voting, eligibility and tenure. These changes should all reflect a two-committee structure, where each committee has authority to act independently.

The order is currently structured around the Oregon and Washington fresh winter pear industry, with the Winter Pear Control Committee responsible for local administration of the program. The proposal to expand order coverage to all pear varieties produced within the production area, and to both the fresh and processed product industries, necessitates modification of this structure.

All witnesses at the hearing supported including both winter and summer/fall pears, in addition to all pear varieties not classified as either, under marketing order 927. Witnesses explained that consolidation would eliminate a confusing and inefficient system currently comprised of two Federal marketing orders and two State commissions. These four programs would be replaced with an updated single marketing program, which would benefit producers, handlers, and processors.

Witnesses also advocated the establishment of two administrative bodies: One for the fresh industry and one for the processed industry. Witnesses explained that while the two industries were both dependent on the same production of pears, the administrative needs of the two industries were different. Managing the two sides of the pear industry, fresh and processed, would require two differing approaches. From promotional activities to customers, trade factors to shelf life, and consumer trends to cultural practices in the orchards, pears for the fresh market differ from pears for processing.

According to the record, the ability for the fresh and processed industries to recommend assessment levels, maintain separate financial records, and establish reserves independently based on specific promotional objectives, is very important. However, the two committees would have the ability to work together in many areas, such as

funding of research that benefits all pears, and compiling statistical reports. Witnesses stated that the proposed amendments to the marketing order would provide a unified program for all pears under one marketing order, yet recognizes the differences in the objectives of the two industries. For these reasons, § 927.20, Establishment and membership, should be amended to create a Fresh Pear Committee and a Processed Pear Committee.

The proposed Fresh Pear Committee should consist of 13 members of whom 6 should be growers, 6 should be handlers and 1 should be a public member. For each member there should be two alternates, designated as the ''first alternate'' and the ''second alternate,'' respectively. Each fresh pear district, described in Material Issue 4, should be represented by one grower member and one handler member, except that the Mid-Columbia District and the Wenatchee District, which should be represented by two grower members and two handler members. The committee should recommend a public member to the Department once the industry representatives are nominated and appointed by the Department.

The proposed Processed Pear Committee should consist of 10 members of whom 3 should be growers, 3 should be handlers, 3 members shall be processors, and 1 should be a public member. For each member there should be two alternates, designated as the ''first alternate'' and the ''second alternate,'' respectively. District 1, the State of Washington, should be represented by two grower members, two handler members and two processor members. District 2, the State of Oregon, should be represented by one grower member, one handler member and one processor member. The committee should recommend a public member to the Department once the industry representatives are nominated and appointed by the Department.

The proposal to add a voting public member to each administrative committee is new to the order. Prior to the proposed amendments, the Winter Pear Control Committee did have the authority to appoint a public advisor. However, the public advisor did not have voting rights. Witnesses supported the addition of a voting public member as they anticipated that a non-industry perspective would contribute the committee discussions and decision-making. Under the proposed amendments, the public member would not be allowed to have financial interests in the pear industry. Thus, the public member would be better able to represent consumer interests.

Sections 927.21 and 927.22, which outline provisions for the nomination and selection of committee members, should be amended to include language specific to the two proposed administrative committees. Nomination and selection of Fresh and Processed Pear Committee members and their respective alternates would operate similarly to the current nomination and selection system for the Winter Pear Control Committee. Committee members would be elected for nomination at a meeting of their peers. This means that growers would be elected at growers' meetings, handlers would be elected at meetings of handlers, and processors would be elected at meetings attended by processors.

Advance notices of these meetings would be placed in the local media, and all eligible members of that peer group could be nominated for selection to the committees. After an individual is nominated, and accepts that nomination, a statement containing background information and acknowledgement of their willingness to serve would be submitted to the USDA. Ultimately, committee member nominees would be selected and appointed as committee members by USDA.

Sections 927.23 and 927.24 govern voting and eligibility requirements for committee members. Again, these sections are based on the language currently in place for the Winter Pear Control Committee. These sections should be revised to reflect the proposed dual committee structure. Voting guidelines stipulate that only growers, handlers or processors, respectively, should vote for their peers.

Moreover, an individual should participate only in the election held in the district in which he or she produces, handles or processes pears. Individuals would be entitled to cast only one vote on behalf of his or her self, his or her agents, partners, affiliates, subsidiaries, and representatives. While each person may vote as a grower, handler or processor, they would not be able to vote as a combination thereof. Thus, if a person were a pear producer, handler and processor, he or she would have to choose whether to participate in the producer, handler or processor member nominations. Likewise, a producer who grows pears in more than one district would have to choose the district in which he or she wishes to participate.

In order to be eligible to serve as a committee member, a grower, handler or processor must conduct their respective business in the district that they represent. Officers or employees of a corporate or limited liability corporation should be eligible to serve as representatives of their employer.

Section 927.27, Term of office, should be amended to replace all references to the Winter Pear Control Committee with the Fresh Pear and Processed Pear Committee. The terms of office of members and alternates should be for 2 years beginning on July 1. About one-half of committee membership of each committee ends each June 30. This provision would allow for staggered terms of office and would ensure that only one-half of each committee rotates tenure each year, thus providing for a continuation of experience among committee members.

Tenure limitations should be the same under the revised order as they currently are for the winter pear committee members. This section states that no member should serve more than three consecutive 2-year terms unless specifically exempted by the Department. Members and alternate members should continue to serve until their respective successors are qualified to serve on the committee and are selected.

Section 927.33, Procedure, describes quorum and voting requirements for committee action at meetings. The language in this section should be revised to reflect the proposed Fresh and Processed Pear Committees and should provide for a 75-percent attendance rate for a quorum for each committee. All decision-making at committee meetings should require the concurring vote of at least 75 percent of those members present, including alternates serving in the place of any members.

When asked how procedural aspects of the order would be impacted given a change in a committee size, witnesses stated that administration of the order should continue to be conducted as currently outlined. If a committee size were to change in terms of total number of members, witnesses felt that the 75 percent requirement for both quorum and committee action should be maintained.

According to the hearing record, witnesses supported the use of current marketing order 927 language as a model for the administrative functioning of the proposed Fresh and Processed Pear Committees. Witnesses noted that marketing order 927 has a long history of effectively meeting the needs of the Oregon and Washington fresh winter pear industry. Therefore, few changes to the provisions of the

above-described sections were proposed.

Record evidence supports the proposed changes in §§ 927.20 to 927.24, 927.27, and 927.33 described above. No opposition to these amendments was offered at the hearing.

Numerous conforming changes are needed to reflect the proposed dual committee structure. These proposed revisions would, for the most part, replace all references to the ''Winter Pear Control Committee'' or ''Control Committee'' with references to the ''Fresh Pear Committee,'' the ''Processed Pear Committee,'' or both. Another change needed in several sections is adding reference to processor committee members in addition to producer and handler members. Such conforming changes are needed in §§ 927.9 Fiscal period; 927.26 Qualifications; 927.28 Alternates for members; 927.29 Vacancies; 927.30 Compensation and expenses; 927.31 Powers; 927.32 Duties; 927.34 Right of the Secretary; 927.35 Funds and other property; 927.40 Expenses; 927.43 Use of funds; 927.45 Contributions; 927.50 Marketing policy; 927.52 Prerequisites to recommendations; 927.53 Notification; 927.75 Liability; 927.79 Proceedings after termination; and 927.80 Amendments. Additionally one heading should be changed from ''Control Committee'' to ''Administrative Bodies.''

Material Issue Number 6—Adding Authority for Changes in Committee Size and Membership Allocation

Section 927.20 of the order should be revised to add authority for the committees, each individually, to recommend changes in committee size and structure. The intent of this proposal is to provide the committees with a tool to more efficiently respond to the changing character of the Oregon and Washington State pear industry. In recommending any such changes, the following would be considered: (1) Shifts in acreage within districts and within the production area during recent years; (2) the importance of new production in its relation to existing districts; (3) equitable relationship between Committee membership and the various districts; (4) economies to result from more efficient administration due to redistricting or reapportionment of members within districts; and (5) other relevant factors.

Testimony indicates that significant changes have occurred in both the production base and industry demographics of the pear industry since the order was implemented. These changes suggest that flexibility in adapting to the changing character of the Oregon and Washington pear industry is important to the administration of the order. Witnesses stated that, ultimately, the order's ability to remain effective over time would be reliant on its ability to change with the needs of the industry. In this regard, witnesses proposed adding authority to the order that would allow for committee size and structure to be considered, and recommendations for change to be made.

Witnesses testified that careful industry analysis would lead to sound recommendations to USDA regarding any change in committee size or structure. If the authority to change the size of the committees were added to the order, the committees could, at regular meetings, review the current structure of the committees using the points of consideration mentioned above. Upon completing this analysis, the committees could make a recommendation to USDA for a change in the size of the committee. Recommendations would be made by each committee individually for the segment of the industry that they represent. Implementation of this authority would allow such changes to be pursued through the informal rulemaking process.

Given the changes that the Oregon and Washington pear industry has seen over time, flexibility to change the size of the committees in step with the evolving needs of the industry would be an important tool. It would allow the committees to focus on the increasing competitiveness in the market while minimizing costs and maximizing efficiency.

Record evidence supports amending the order to add authority to change committee size and structure. This amendment would allow each committee, given due analysis and consideration of key factors and USDA approval, to more quickly adapt to changes within the industry. There was no opposition to the above proposal. Accordingly, USDA is proposing that § 927.20 be amended.

Material Issue Number 7—Assessment and Supplemental Assessment Rates

Section 927.41, Assessments, should be amended to allow the Fresh Pear and Processed Pear Committees to recommend rates of assessment for each category of pears, including summer/fall pears, winter pears, and all other pears. In addition, rates of assessment could be different for fresh pears and pears for processing in each category, and could include supplemental rates on individual varieties.

Currently, the order provides for an assessment rate for winter pears, and supplemental assessment rates for individual varieties and subvarieties of winter pears, to be established. Rates of assessment are recommended to the Department for approval. If authority to establish rates of assessment for summer/fall and other pear varieties, as well as supplemental rates of assessment, were incorporated under the order, they, too, would be subject to approval by USDA. Assessments are used to fund the administrative functions of the committee, in addition to any research and promotional activities authorized under the order. According to the record, supplemental rates of assessment would be used for expenses specific to an individual variety or subvariety of pear.

Witnesses stated that three different base assessments would best serve the industry. Historically, fresh winter pear varieties have paid higher assessments than fresh summer/fall pears. Pears for processing have been assessed at yet a different level, and could feasibly have differential assessments for winter, summer/fall or other varieties over time.

Moreover, while the proposed amendments would result in unifying the programs for winter pears and summer/fall pears varieties under one marketing order, (and one, combined fiscal year) separate base assessment rates would allow for differences in the budget requirements for each category. Winter pears have a distinct season from summer/fall pears, and thus present distinct, identifiable costs. The operational differences of each category reflect the need for maintaining differences in base assessment rates in order to generate adequate funds cover category-specific costs.

According to the record, the base assessment for pears classified as ''other'' is intended for the future needs of the industry as new varieties or subvarieties of the genus *Pyrus* are developed that do not fit under either ''winter pear'' or ''summer/fall pear.''

Besides the differences between fresh and processed pears, witnesses stated that it would be important to provide each committee with the authority to establish varying rates of assessment on a variety-specific basis. This authority would provide the committees with flexibility to ensure that variety-specific projects could be undertaken as special promotional or research needs develop. Having the ability to add a supplemental rate of assessment to a specific variety, without raising assessments for all other pears, would allow the committee to address those needs without requiring funding by

entities not involved with the production or handling of that variety.

According to the record, a supplemental rate of assessment for Anjou pears currently exists under marketing order 927. Funds generated by this supplemental assessment are used to address research and production issues specific to ethoxyquin use to stop scald, a defect found almost exclusively in Anjou pears. Anjou growers testifying at the hearing indicated their support of this supplemental assessment and stated that without the resulting extra revenue, research and registration of ethoxyquin chemicals essential to the industry would be unavailable. Without the flexibility of a supplemental assessment, witnesses stated that the lack of funding and loss in investments of Anjou production could have resulted in an industry crisis.

Record evidence supports amending the marketing order to authorize establishment of rates of assessment for each category of pears, including summer/fall pears, winter pears, and all other pears. In addition, rates of assessment could be different for fresh pears and pears for processing in each category, and could include supplemental rates on individual varieties or subvarieties. There was no opposition to the above proposal. Accordingly, the Department is proposing that § 927.41 be amended.

Material Issue Number 8—Adding Authority for Container Marking Requirements

Section 927.51, Issuance of regulations and modification, suspension, or termination thereof, should be amended to provide authority for container marking regulations for fresh pears. This authority would allow the Fresh Pear Committee to recommend mandatory marking or labeling requirements on containers used in the packing or handling of fresh pears grown in Oregon and Washington. Any committee recommendation would be subject to review and approval of the Secretary.

The order currently authorizes the establishment of grade, size and quality regulations, but does not include container-marking authority. Witnesses stated that this authority, which would include the use of generic industry logos, would provide the industry with a marketing tool to enhance the presentation of fresh Northwest pears in the marketplace.

According to the record, the industry's ability to deliver a consistently graded, sized, weighed, and marked product has become steadily more important. The growing presence of imported pears and other like products have caused increased competition for the consumer's attention in the marketplace. Pear supply and utilization figures from the USDA's Economic Research Service show that imports have accounted for between 20 and 23 percent of U.S. domestic fresh pear consumption in recent years. Imports from Argentina and Chile are the most prevalent. Use of a generic pear logo, by the Northwest Pear Bureau, the promotional organization representing Oregon and Washington fresh pears, has been helpful in promoting pears to consumers. If the proposed container marking authority were implemented, the Fresh Pear Committee could expand the use of this logo or develop similar promotional marking requirements.

Witnesses also explained that handlers, in packing to the varying demands of their customers, are using an increasing number of different types of containers. Pear sizes have traditionally been associated with the number of pears that fit into a western standard box (*see* Material Issue 2). However, since the western standard box is no longer ''standard'', determining the size of pear packed cannot be simply calculated by counting the number of pears in the container. For this reason, handlers testifying at the hearing stated that container marking would be helpful in reducing confusion in the marketplace. If pear size were required to be marked on all containers packed, regardless of the container size or shape, this information would be more readily available to consumers. This information would also allow for easier price comparisons between differing containers holding the same size pear.

Witnesses offered the following example of regulating 180-size pears to describe how container-marking authority could be beneficial to the fresh pear industry:

If the Fresh Pear Committee were to determine that, for example, size 180 pears are not profitable to the grower, a regulation eliminating that size from the marketplace could be implemented. The committee could also implement a container-marking requirement mandating the marking of product size on all fresh pear containers. In this case, container marking would facilitate better identification of the size of pears in containers and better communication of size of product to customers.

Testimony indicated that fresh packing facilities are already configured for labeling and container marking. Witnesses noted that there would be little, if any, need for equipment changes or additions. Thus, the proposed change is not expected to negatively affect the costs associated with handling fresh pears. The proposed amendment would only authorize container marking specifications; it would not impose any new regulatory requirements on Oregon or Washington fresh pear handlers. Authority to regulate container pack or size is also not included as part of this proposal. Any specific recommendation by the Committee to implement this authority would be subject to analysis through the informal rulemaking process.

Record evidence supports amending the order to include container marking authority. This amendment would allow the Fresh Pear Committee to recommend, and USDA to implement, container marking requirements through the informal rulemaking procedure. No opposition to the above proposal was voiced at the hearing. Accordingly, USDA proposes that § 927.51 be amended.

Material Issue Number 9—Removal of Grower Exemption Certificates

Section 927.54, Exemption certificates, should be removed from the order as it is obsolete and no longer used by the industry. This section provides authority for the issuance of exemption certificates to growers who would be prevented from shipping product under a grade or size regulation implemented under the order. A grower receiving such an exemption certificate would be allowed to ship a quantity of the variety being regulated equal to the average shipping quantity of that variety for the district in which he or she produces.

According to the record, grade and size regulations for pears other than the Anjou pear variety have only been implemented once in the history of marketing order 927, in 1977. Witnesses stated that the practical use of this exemption clause at that time was deemed ineffective. Consequently, it was recommended by the committee that this authority be eliminated.

For the above reasons, the Department agrees that § 927.54 should be removed from the order.

Material Issue Number 10—Confidentiality and Record Retention Requirements

The Fresh Pear Committee and the Processed Pear Committee should, each independently, have authority to establish handler reporting requirements, subject to USDA approval. Section 927.70, Reports, should be further revised to include language spelling out confidential

treatment of handler information submitted to the committees under the mandatory reporting requirements of this section.

Confidentiality would help protect handlers against any disclosure of information that might adversely affect or reveal a handler's competitive position. The proposed amendment would also add language providing that handlers must retain shipping and disposition records of pears handled for two years. The record retention requirement would allow the committees access to information in the event that handler reports need to be verified.

According to the record, Oregon and Washington winter and summer/fall pear handlers currently submit reports under marketing orders 927 and 931. Information submitted in accordance with reporting requirements provides the data necessary for such things as annual production by variety, shipment volumes during the season, and historic comparisons. In turn, the committees use industry reports to determine promotion, sales and marketing activities. Information gathered from these reports is also used to calculate assessments and conduct compliance audits.

Witnesses stated that adding the requirement for record retention for two years would formalize current industry practices and would update order language to conform to the Act.

For the reasons described above, § 927.70, Reports, should be amended to include confidentiality and record retention requirements. No opposition to this proposal was voiced at the hearing.

Material Issue Number 11—Inspection Requirements

Section 927.60, Inspection and certification, should be amended to clarify current inspection requirements and add authority for the Fresh Pear Committee to recommend elimination of those requirements under certain circumstances.

Section 927.51 of the order authorizes the establishment of grade, size and quality requirements for fresh shipments of pears. Section 927.60 requires that each shipment of fresh pears be inspected and certified by the Federal-State Inspection Service. The primary purpose of the inspection and certification requirement is to ensure compliance with any regulations in effect under the authority of § 927.51.

Traditionally, the pear industry has used end-line inspection procedures. Under this scenario, samples of packed pears are examined at the end of the production process, and the results are certified by Federally licensed inspectors. The record shows that in recent years, the Federal-State Inspection Service has developed effective, less costly alternatives to the end-line inspection program. One alternative is the ''Partners in Quality'' program, a documented quality assurance system. Under this program, individual packing houses must demonstrate and document their ability to pack product that meets all relevant quality requirements. Effectiveness of the program is verified through periodic, unannounced audits of each packer's system by USDA-approved auditors.

Another program recently developed is the Customer Assisted Inspection Program (CAIP). Under CAIP, USDA inspectors oversee the in-line sampling and inspection process performed by trained company staff. USDA oversight ranges from periodic visits throughout the day to a continuous on-site presence.

Witnesses at the hearing testified that the fresh pear industry should be able to utilize any method of inspection acceptable to the Federal-State Inspection Service. These alternative methods have been developed by USDA as a means of reducing costs to industry. Individual pear handlers could choose the method of inspection best suited to their operations. The language of § 927.60 is proposed to be revised to make this clarification.

Witnesses also testified that the Committee should be authorized to recommend modification or elimination of the inspection requirement if it is able to devise an alternative means of ensuring compliance with any quality and size standards in effect under the order. Any alternative system would have to be approved by the Department through the informal rulemaking process. Additionally, it would have to provide adequate assurance that handlers under the program were in compliance with program requirements.

The Agricultural Marketing Service is responsible for ensuring that all handlers regulated under a marketing order program are in compliance with any regulations that are in effect. Marketing order administrative committees have the responsibility of locally administering marketing order programs, which includes monitoring industry s compliance with order requirements, and reporting any violations to the Department for enforcement measures.

While the Department supports and encourages innovation and development of cost-saving procedures, it is important that the program maintain its integrity and that any quality or size regulation in effect are not compromised.

Witnesses at the hearing did not provide specific examples of any alternatives. However, they supported maximum flexibility in the order to allow the industry to take advantage of any innovative procedures that may be available in the future. As previously discussed, such procedures would require USDA approval.

According to the hearing record, the integrity of the industry s commitment to comply with grade and size regulations would not be compromised. The authority to recommend alternatives to mandatory inspection would be a practical tool for the industry. It would allow grade and size standards to be maintained, yet could allow for time and cost-saving opportunities.

One witness offered the example of current quality regulations in effect for Anjou pears. All Anjou pears shipped domestically prior to November 1st must have a pressure reading of 14 pounds or below and have been cooled to at least 35 degrees. This regulation requires that the fruit be inspected. Handlers currently pay 12½ cents per hundredweight for this inspection. At times, they lose time due to delays in the inspection process. Handler witnesses also indicated that delays could be longer for smaller shippers that do not have inspectors stationed at their warehouses. Witnesses explained that if alternative forms of inspection were allowed, grade and size regulation could be more economically implemented.

Record evidence supports amending § 927.60 to clarify that any inspection program developed by the Federal-State Inspection Service may be utilized by fresh pear handlers under the order. Additionally, that section should be amended to add authority for the Fresh Pear Committee to recommend modification or elimination of the inspection requirement provided that an adequate method of ensuring compliance with quality and size requirements can be developed. This amendment would allow the Fresh Pear Committee to recommend, and USDA to implement, time and cost-saving mechanisms for handlers without compromising product quality in the marketplace.

The proposed language of 927.60, Inspection and certification, has been revised somewhat from what appeared in the Notice of Hearing to clarify the intent of the pear industry, as testified at the hearing.

Material Issue Number 12—Elimination of Obsolete Exemption Provisions

Section 927.65, Exemption from regulation, allows pears shipped for certain purposes to be exempt from handling regulations in effect under the order as well as from assessments. This section should be amended by deleting obsolete provisions.

Currently pears shipped for consumption by charitable institutions, distribution by relief agencies, or conversion into by-products are exempt from regulation. Since this decision recommends extending program coverage to pears for processing, the third purpose listed needs to be deleted.

Additionally, paragraph (c) of § 927.65 provides authority for the committee, with the approval of USDA, to designate storage warehouses within the production area. Pears shipped to those storage warehouses would be exempt from any regulatory provisions in effect under the order. This authority has never been used. As such, the record supports deleting this provision as unnecessary. The administrative committees would retain the authority (provided in § 927.65(b)) to designate types of shipments that should be exempt from regulations (including payment of assessments). Such exemptions could only be implemented with USDA approval through informal rulemaking.

This proposal also recommends revising the language in § 927.64 paragraphs (a) and (b), to reflect the dual committee structure described in Material Issue 5. The amended language would replace all references to the ''Winter Pear Control Committee'' in this section with ''the Fresh Pear Committee or the Processed Pear Committee.''

Given the above-described reasons, the Department agrees that § 927.64 should be amended by removing paragraph (c) from the order and updating language in paragraphs (a) and (b) to reflect to the proposed dual committee structure. No opposition to this proposal was presented at the hearing.

Material Issue Number 13—Continuance Referenda

Section 927.78, Termination, should be amended to provide for separate continuance referenda for fresh pears and pears for processing every 6 years. A vote to discontinue the program with respect to fresh pears would not result in discontinuance of the order with respect to pears for processing, and vice versa.

Marketing order 927 currently requires that continuance referenda be held every 6 years. Witnesses supported the need for maintaining the referendum process and stated that this practice should be extended to both fresh and processed pears.

The record shows that producers should have an opportunity to periodically vote on whether a marketing order should continue. Continuance referenda provide an industry with a means to measure producer support for the program. Experience has shown that programs need significant industry support to operate effectively. Continuance would require a favorable vote of at least two-thirds of those voting, or at least two-thirds of the volume represented in the referendum. This is the same as that for issuance and amendment of an order.

The USDA believes that producers should have an opportunity to periodically vote on whether the marketing order should continue, and that the costs in time and money are well worth the periodic producer feedback afforded by such referenda. Accordingly, the record evidence supports the requirement that such referenda be conducted.

Record evidence supports the amendment of §§ 927.78 to require separate continuance referenda for fresh and processed pears. No opposition to this proposal was received at the hearing.

Material Issue Number 14—Adding Authority for Post-Harvest Research

Section 927.47, Research and development, should be amended to include authority for post-harvest research. In addition, the language in this section should be revised to reflect the proposed dual committee structure. All references to the Winter Pear Control Committee should be revised to reference the proposed Fresh and Processed Pear Committees.

The order currently contains authority for production research and marketing research, but does not contain specific authority for post-harvest research. Examples of post-harvest research include developing improved storage, handling and packaging technologies. Witnesses supported the need for research in this area and discussed the benefits currently brought to the industry through production and market research.

Witnesses stated that research and promotion have been beneficial in assisting the pear industry to improve crop yields and enhance marketability and market distribution of their product. As a result, pears have been able to retain a viable role in an increasingly competitive market. Post-harvest research would complement the already existing authorities, as it would focus on a section of the pear crop to market flow that, until now, has not benefited from research activities. For example, improved storage techniques could benefit the pear industry by decreasing the loss of product due to storage, or by increasing the storability of product to help prolong the marketing season. Funding for these activities would come from assessments and would be subject to approval by the Department.

Authority for promotion, including paid advertising, also currently exists under the order. Given the proposal to add summer/fall pear varieties to the scope of the order, the already existing authority for paid advertising would be applied to these varieties if the proposed amendments were implemented. Witnesses stated that these promotional activities, including paid generic advertising, have historically been beneficial in boosting sales and maintaining market share.

Witnesses also expressed that research and promotion activities were likely to be more effective and cost-efficient under the proposed dual-committee structure as the industry would be able to better coordinate needs and resources. Promotional authority for both commodities, fresh and processed pears, should include market research and development projects, as well as marketing promotion, including paid advertising. In the absence of this proposed change, the effectiveness of the total pear marketing program would be limited by the inability to use all available tools when promoting pears grown in the Northwest.

Record evidence indicates that, in the past, pear-related research has been supported by a number of industry organizations, State commissions, and Federal marketing orders. With the proposed consolidation of all pears under one marketing order, it is essential that both committees have the authority to collect and allocate research assessment dollars to ensure that the necessary funding continues to be available for specific projects supported by the industry. To this end, witnesses stated that research benefits everyone. As an example, research that leads to improved pack-outs or improved storability would likely increase grower returns and provide a better product on store shelves, to the benefit of the consumer.

Given the reasons outlined above, § 927.47, Research and promotion, should be amended to include authority for post-harvest research. In addition, changes should be made in the language of this section to reflect the proposed

dual-committee structure representing both fresh and processed pears. No opposition to this proposal was voiced at the hearing.

Material Issue Number 15—Updating of Order Provisions

Marketing order 927 contains several sections that should be amended to better reflect current industry operations. These amendments are largely considered housekeeping changes, as they are intended to simply update language rather than alter the meaning of order provisions in any way.

Section 927.1, Secretary, should be revised to include the modern definition of this term. The revised definition recognizes officers or employees of the Department of Agriculture as delegates of the Secretary of Agriculture.

Section 927.3, Person, should be revised to make this definition consistent with that in the Act.

Section 927.6, Grower, should be revised to recognize the term ''producer'' as a synonymous term.

Section 927.44, Collection of assessments, should be removed as being obsolete and inconsistent with USDA policy.

Section 927.77, Effective time, should be revised by removing the date ''August 26, 1939'' as obsolete.

No opposition to these amendments was voiced at the hearing. Accordingly, USDA proposes that the above-described sections be amended.

Small Business Consideration

Pursuant to the requirements set forth in the Regulatory Flexibility Act (RFA), the Agricultural Marketing Service (AMS) has considered the economic impact of this action on small entities. Accordingly, AMS has prepared this initial regulatory flexibility analysis.

The purpose of the RFA is to fit regulatory actions to the scale of business subject to such actions so that small businesses will not be unduly or disproportionately burdened. Marketing orders and amendments thereto are unique in that they are normally brought about through group action of essentially small entities for their own benefit. Thus, both the RFA and the Act are compatible with respect to small entities.

Small agricultural producers have been defined by the Small Business Administration (SBA)(13 CFR 121.201) as those having annual receipts of less than $750,000. Small agricultural service firms, which include handlers regulated under the order, are defined as those with annual receipts of less than $5,000,000.

Interested persons were invited to present evidence at the hearing on the probable regulatory and informational impact of the proposed amendments to the order on small businesses. The record evidence is that most of the proposed amendments are designed to enhance industry efficiencies and reduce costs, thereby improving grower returns.

The record indicates that there are approximately 1,850 pear growers in Oregon and Washington. Of that total, 1,345 growers report Bartlett or other summer/fall pear production, and 1,753 growers report winter pear production. Two-year average NASS figures (the 2002 crop year and preliminary figures for 2003) provides the following production profile for Washington and Oregon, respectively: bearing acres, 24,800 and 17,600; yield per acre, 16.8 tons and 11.8 tons; annual production, 417,500 tons and 207,500 tons. Total acres planted in pears for Washington and Oregon (including non-bearing acres) in 2002 were 26,586 and 22,822, respectively. Average Washington and Oregon pear pack-out for the 10-year period from 1993/94 to 2002/03 was 14,639,225 standard boxes, compared to 13,476,829 standard boxes for 1989/90–1998/99.

Summing average Washington and Oregon pear acreage for 2002 and 2003, and dividing by the number of growers (1,850), the estimated average acreage per grower in the two-state area is 26.7 total acres and 22.9 bearing acres. According to the 1997 Agricultural Census, the average Oregon and Washington pear grower had approximately 23 and 15 total acres, respectively. The sum of average Washington and Oregon pear production for 2002 and 2003, divided by the number of growers, yields an estimated average production per grower in the two-state area of 338 tons (676,000 pounds).

The average fresh market grower return for the two States has been between 20 and 22 cents per pound in recent years, and between 10 and 12 cents per pound for processing. Estimated 2-year average pear sales revenue per grower in the production area is approximately $101,000, which is between 1/7 and 1/8 of the revenue that would qualify a grower to be a large grower according to the SBA definition (if based on pear sales alone). According to the hearing record, roughly 75 percent of the fresh pear producers in the States of Oregon and Washington qualify as small producers. One witness stated that a 1,000-acre farm represents the threshold between a small and a large producer (a substantially different definition from what the SBA uses).

There are 55 handlers that handle fresh pears produced in Oregon and Washington; 73 percent of these fall into the SBA definition of ''small business. There are five processing plants in the production area, with one in Oregon and four in Washington. All five processors are larger than the SBA's definition of small business. According to information presented by processors testifying at the hearing, roughly 90 percent of pears received for processing come from small grower entities.

The proposals put forth at the hearing would streamline industry organization, but would not result in a significant change in industry production, harvest or distribution activities. In discussing the impacts of the proposed amendments on small growers and handlers, witnesses indicated that the changes are expected to result in lower costs.

If implemented, the amendments would result in the consolidation of marketing orders 927 and 931, regulating fresh winter pears and summer/fall pears, respectively. Program coverage would also be extended to pears for processing. The combined programs would be administered by two new administrative committees, one for fresh pears and one for pears for processing. Cost savings could occur as a result of more efficient coordination of administrative activities between the two proposed committees.

Record evidence indicates the proposal to revise the order s inspection provisions may result in cost savings for handlers. Handlers within the production area typically have about 75 percent of their product inspected on a voluntary basis. The remaining 25 percent represents the amount of additional product that would be required to be inspected if regulations were in effect.

Handler witnesses also reported that inspection costs average 12½ cents per hundredweight, with a $9.00 minimum fee. In addition to paying the inspection fee, handlers may also experience delays in shipments while waiting for inspection to be completed. Handlers indicated that such delays could be longer for smaller shippers that do not have inspectors regularly stationed at their warehouses. This proposal seeks to reduce these costs by allowing alternatives to mandatory inspection.

Traditionally, the pear industry has used end-line inspection procedures. Under this scenario, samples of packed pears are examined at the end of the production process, and the results are certified by Federally licensed

inspectors. The record shows that in recent years, the Federal-State Inspection Service has developed effective, less costly alternatives to the end-line inspection program. One alternative is the Partners in Quality program, a documented quality assurance system. Under this program, individual packing houses must demonstrate and document their ability to pack product that meets all relevant quality requirements. Effectiveness of the program is verified through periodic, unannounced audits of each packer's system by USDA-approved auditors.

Another program recently developed is the Customer Assisted Inspection Program (CAIP). Under CAIP, USDA inspectors oversee the in-line sampling and inspection process performed by trained company staff. USDA oversight ranges from periodic visits throughout the day to a continuous on-site presence. Witnesses at the hearing testified that the fresh pear industry should be able to utilize any method of inspection acceptable to the Federal-State Inspection Service. These alternative methods have been developed by USDA as a means of reducing costs to industry. If this amendment were implemented, individual pear handlers could choose the method of inspection best suited to their operations, thereby possibly reducing costs associated with inspection.

Additionally, the authority to eliminate inspection requirements could have handler cost implications. However, any increase or decrease in costs could not be determined until specific alternative methods are developed to assure compliance with any quality and size standards in effect.

The proposal to authorize container marking requirements is not expected to result in significant cost increases for fresh pear handlers. Testimony indicated that packing facilities are already configured for labeling and container marking. Witnesses noted that there would be little, if any, need for equipment changes or additions. Thus, the proposed change is not expected to have any adverse financial impact related to handling fresh pears. It should be noted that the proposed amendment would only grant the committees authority to recommend container markings; implementation of this authority could be done through informal rulemaking in the future. The amendment itself would therefore not impose any new regulatory requirements on Oregon or Washington fresh pear handlers.

Witnesses explained that the winter, summer/fall, fresh and processed pear industries are closely inter-related. Growing, harvesting, packing, processing and marketing activities of these industries all impact each other. Thus, bringing all industry segments together under a single marketing program would be beneficial for the Oregon and Washington pear industry. Proponent witnesses stated that the combined amendments, if implemented, would help to improve the orderly marketing of product within the industry.

Similarly, coordinated marketing and distribution efforts for fresh varieties that appear in the marketplace simultaneously would assist in maximizing grower returns from each variety. While the industries currently undertake coordinated marketing and promotional activities, witnesses stated that combining these industries would further synchronize activities and facilitate industry discussions and decision-making.

The amendments would add authority to assess summer/fall pear handlers and undertake promotional activities on their behalf in a manner similar to that done currently for winter pears. When asked if assuming this authority would be acceptable to the summer/fall pear industry, witnesses supported promotional activities, including paid generic advertising, as a way to boost sales and maintain market share.

Post-harvest research would also benefit the pear industries by focusing on a section of the pear crop-to-market flow that, until now, has not benefited from research activities. Improved storage techniques resulting from industry-funded post-harvest research could benefit the pear industry by decreasing the loss of product due to storage, or by increasing the storability of product to help prolong the marketing season.

A significant market-facilitating function carried out by the current marketing order committees is the collection of statistical data. That function would continue under the amended marketing order and the authority to collect information would extend to additional varieties that are currently produced. Flexibility is provided for including other varieties in the future. Witnesses emphasized the importance and value of collecting and disseminating accurate statistical information to enable industry participants to make economic and marketing decisions.

The proposal to establish two administrative committees also includes the addition of a public member to each of those committees. The benefit of adding a non-industry, consumer perspective to committee deliberations and decision-making could prove very beneficial. Witnesses stated that this additional perspective would improve the committees understanding of the consumer in the marketplace and could enhance committee activities aimed at increasing consumer demand for Oregon and Washington pears.

The addition of a public member to each committee is not expected to result in any substantial cost increases. While these members would be entitled to reimbursement for certain expenses allowed for under the order, this expense is neither different nor any more burdensome than the current reimbursement arrangement for committee members.

Interested persons were invited to present evidence at the hearing on the probable regulatory and informational impact of the proposed amendments to the order on small entities. The record evidence is that most of the amendments are designed to reduce costs. While some of the proposals could impose some minimal costs, those costs would be outweighed by the benefits expected to accrue to the Oregon and Washington pear industry.

Current information collection requirements for Part 927 are approved by OMB under OMB number 0581–0089. Any changes in those requirements as a result of this proceeding would be submitted to OMB for approval. Witnesses stated that existing forms could be adequately modified to serve the needs of the proposed fresh and processed pear committees. While conforming changes to the forms would need to be made (such as changing the name of the committee), the functionality of the forms would remain the same.

As with all Federal marketing order programs, reports and forms are periodically reviewed to reduce information requirements and duplication by industry and public sector agencies.

USDA has not identified any relevant Federal rules that duplicate, overlap or conflict with this proposed rule. These amendments are designed to enhance the administration and functioning of the marketing order to the benefit of the industry.

Committee meetings regarding these proposals as well as the hearing dates were widely publicized throughout the Oregon and Washington fresh and processed pear industries, and all interested persons were invited to attend the meetings and the hearing and participate in deliberations on all issues.

All committee meetings (both of the Winter Pear Committee and the Northwest Bartlett Pear Committee) and the hearing were public forums and all entities, both large and small, were able to express views on these issues. Finally, interested persons are invited to submit information on the regulatory and informational impacts of this action on small businesses.

A 30-day comment period is provided to allow interested persons to respond to this proposal. Thirty days is deemed appropriate so that this rulemaking may be completed prior to the beginning of the 2005 crop year, beginning July 1, 2005. All written exceptions timely received will be considered and a grower referendum will be conducted before these proposals are implemented.

Civil Justice Reform

The amendments to Marketing Agreement and Order 927 proposed herein have been reviewed under Executive Order 12988, Civil Justice Reform. They are not intended to have retroactive effect. If adopted, the proposed amendments would not preempt any State or local laws, regulations, or policies, unless they present an irreconcilable conflict with this proposal.

The Act provides that administrative proceedings must be exhausted before parties may file suit in court. Under section 608c(15)(A) of the Act, any handler subject to an order may file with USDA a petition stating that the order, any provision of the order, or any obligation imposed in connection with the order is not in accordance with law and request a modification of the order or to be exempted therefrom. A handler is afforded the opportunity for a hearing on the petition. After the hearing, USDA would rule on the petition. The Act provides that the district court of the United States in any district in which the handler is an inhabitant, or has his or her principal place of business, has jurisdiction to review USDA's ruling on the petition, provided an action is filed not later than 20 days after the date of the entry of the ruling.

Rulings on Briefs of Interested Persons

Briefs, proposed findings and conclusions, and the evidence in the record were considered in making the findings and conclusions set forth in this recommended decision. To the extent that the suggested findings and conclusions filed by interested persons are inconsistent with thefindings and conclusions of this recommended decision, the requests to make such findings or to reach such conclusions are denied.

General Findings

The findings hereinafter set forth are supplementary to the findings and determinations which were previously made in connection with the issuance of the marketing agreement and order; and all said previous findings and determinations are hereby ratified and affirmed, except insofar as such findings and determinations may be in conflict with the findings and determinations set forth herein.

(1) The marketing agreement and order, as amended, and as hereby proposed to be further amended, and all of the terms and conditions thereof, would tend to effectuate the declared policy of the Act;

(2) The marketing agreement and order, as amended, and as hereby proposed to be further amended, regulate the handling of pears grown in the production area in the same manner as, and are applicable only to, persons in the respective classes of commercial and industrial activity specified in the marketing agreement and order upon which a hearing has been held;

(3) The marketing agreement and order, as amended, and as hereby proposed to be further amended, are limited in their application to the smallest regional production area which is practicable, consistent with carrying out the declared policy of the Act, and the issuance of several orders applicable to subdivisions of the production area would not effectively carry out the declared policy of the Act;

(4) The marketing agreement and order, as amended, and as hereby proposed to be further amended, prescribe, insofar as practicable, such different terms applicable to different parts of the production area as are necessary to give due recognition to the differences in the production and marketing of pears grown in the production area; and

(5) All handling of pears grown in the production area as defined in the marketing agreement and order, is in the current of interstate or foreign commerce or directly burdens, obstructs, or affects such commerce.

A 30-day comment period is provided to allow interested persons to respond to this proposal. Thirty days is deemed appropriate so that this rulemaking may be completed prior to the 2005–2006 season. All written exceptions timely received will be considered and a grower referendum will be conducted before these proposals are implemented.

List of Subjects in 7 CFR Part 927

Marketing agreements, Winter pears, Reporting and recordkeeping requirements.

Recommended Further Amendment of the Marketing Agreement and Order

For the reasons set out in the preamble, 7 CFR part 927 is proposed to be amended as follows:

PART 927—PEARS GROWN IN OREGON AND WASHINGTON

1. The authority citation for 7 CFR part 927 continues to read as follows:

Authority: 7 U.S.C. 601–674.

2. Revise the heading of part 927 to read as set forth above.

3. Revise § 927.1 to read as follows:

§ 927.1 Secretary.

Secretary means the Secretary of Agriculture of the United States, or any officer or employee of the Department of Agriculture who has been delegated, or to whom authority may hereafter be delegated, the authority to act for the Secretary.

4. Revise § 927.3 to read as follows:

§ 927.3 Person.

Person means an individual partnership, corporation, association, legal representative, or any other business unit.

5. Revise § 927.4 to read as follows:

§ 927.4 Pears.

(a) *Pears* means and includes any and all varieties or subvarieties of pears with the genus *Pyrus* that are produced in the production area and are classified as:

(1) Summer/fall pears including Bartlett and Starkrimson pears;

(2) Winter pears including Beurre D, Anjou, Beurre Bosc, Doyenne du Comice, Concorde, Forelle, Winter Nelis, Packham, Seckel, and Taylor's Gold pears; and

(3) Other pears including any or all other varieties or subvarieties of pears not classified as summer/fall or winter pears.

(b) The Fresh Pear Committee and/or the Processed Pear Committee, with the approval of the Secretary, may recognize new or delete obsolete varieties or subvarieties for each category.

6. Revise § 927.5 to read as follows:

§ 927.5 Size.

Size means the number of pears which can be packed in a 44-pound net weight standard box or container equivalent, or as ''size'' means the greatest transverse diameter of the pear taken at right angles to a line running from the stem to the blossom end, or such other specifications more specifically defined in a regulation issued under this part.

7. Revise § 927.6 to read as follows:

§ 927.6 Grower.

Grower is synonymous with producer and means any person engaged in the production of pears, either as owner or as tenant.

8. Revise § 927.7 to read as follows:

§ 927.7 Handler.

Handler is synonymous with shipper and means any person (except a common or contract carrier transporting pears owned by another person) who, as owner, agent, broker, or otherwise, ships or handles pears, or causes pears to be shipped or handled by rail, truck, boat, or any other means whatsoever.

9. Revise § 927.8 to read as follows:

§ 927.8 Ship or handle.

Ship or handle means to sell, deliver, consign, transport or ship pears within the production area or between the production area and any point outside thereof, including receiving pears for processing: *Provided,* That the term ''handle'' shall not include the transportation of pear shipments within the production area from the orchard where grown to a packing facility located within the production area for preparation for market or delivery for processing.

10. Revise § 927.9 to read as follows:

§ 927.9 Fiscal period.

Fiscal period means the period beginning July 1 of any year and ending June 30 of the following year or such may be approved by the Secretary pursuant to a joint recommendation by the Fresh Pear Committee and the Processed Pear Committee.

11. Revise § 927.11 to read as follows:

§ 927.11 District.

District means the applicable one of the following—described subdivisions of the production area covered by the provisions of this subpart:

(a) For the purpose of committee representation, administration and application of provisions of this subpart as applicable to pears for the fresh market, districts shall be defined as follows:

(1) *Medford District* shall include all the counties in the State of Oregon except for Hood River and Wasco counties.

(2) *Mid-Columbia District* shall include Hood River and Wasco counties in the State of Oregon, and the counties of Skamania and Klickitat in the State of Washington.

(3) *Wenatchee District* shall include the counties of King, Chelan, Okanogan, Douglas, Grant, Lincoln, and Spokane in the State of Washington, and all other counties in Washington lying north thereof.

(4) *Yakima District* shall include all of the State of Washington, not included in the Wenatchee District or in the Mid-Columbia District.

(b) For the purpose of committee representation, administration and application of provisions of this subpart as applicable to pears for processing, districts shall be defined as follows:

(1) The State of Washington.

(2) The State of Oregon.

(c) The Secretary, upon recommendation of the Fresh Pear Committee or the Processed Pear Committee, may reestablish districts within the production area.

12. Revise § 927.13 to read as follows:

§ 927.13 Subvariety.

Subvariety means and includes any mutation, sport, or other derivation of any of the varieties covered in § 927.4 which is recognized by the Fresh Pear Committee or the Processed Pear Committee and approved by the Secretary. Recognition of a subvariety shall include classification within a varietal group for the purposes of votes conducted under § 927.52.

13. Add a new § 927.14 to read as follows:

§ 927.14 Processor.

Processor means any person who as owner, agent, broker, or otherwise, commercially processes pears in the production area.

14. Add a new § 927.15 to read as follows:

§ 927.15 Process.

Process means to can, concentrate, freeze, dehydrate, press or puree pears, or in any other way convert pears commercially into a processed product.

15. Revise the undesignated center heading preceding § 927.20 to read as follows:

Administrative Bodies

16. Revise § 927.20 to read as follows:

§ 927.20 Establishment and membership.

There are hereby established two committees to administer the terms and provisions of this subpart as specifically provided in §§ 927.20 through 927.35:

(a) A Fresh Pear Committee, consisting of 13 individual persons as its members is established to administer order provisions relating to the handling of pears for the fresh market. Six members of the Fresh Pear Committee shall be growers, six members shall be handlers, and one member shall represent the public. For each member there shall be two alternates, designated as the ''first alternate'' and the ''second alternate,'' respectively. Each district shall be represented by one grower member and one handler member, except that the Mid-Columbia District and the Wenatchee District shall be represented by two grower members and two handler members.

(b) A Processed Pear Committee consisting of 10 members is established to administer order provisions relating to the handling of pears for processing. Three members of the Processed Pear Committee shall be growers, three members shall be handlers, three members shall be processors, and one member shall represent the public. For each member there shall be two alternates, designated as the ''first alternate'' and the ''second alternate'', respectively. District 1, the State of Washington, shall be represented by two grower members, two handler members and two processor members. District 2, the State of Oregon, shall be represented by one grower member, one handler member and one processor member.

(c) The Secretary, upon recommendation of the Fresh Pear Committee or the Processed Pear Committee may reapportion members among districts, may change the number of members and alternates, and may change the composition by changing the ratio of members, including their alternates. In recommending any such changes, the following shall be considered:

(1) Shifts in pear acreage within districts and within the production area during recent years;

(2) The importance of new pear production in its relation to existing districts;

(3) The equitable relationship between membership and districts;

(4) Economies to result for growers in promoting efficient administration due to redistricting or reapportionment of members within districts; and

(5) Other relevant factors.

17. Revise § 927.21 to read as follows:

§ 927.21 Nomination and selection of members and their respective alternates.

Grower members and their respective alternates for each district shall be selected by the Secretary from nominees elected by the growers in such district. Handler members and their respective alternates for each district shall be selected by the Secretary from nominees elected by the handlers in such district. Processor members and their respective alternates shall be selected by the Secretary from nominees elected by the processors. Public members for each committee shall be nominated by the Fresh Pear Committee and the Processed Pear Committee, each independently, and selected by the Secretary. The Fresh Pear Committee and the Processed Pear

Committee may, each independently, prescribe such additional qualifications, administrative rules and procedures for selection for each candidate as it deems necessary and as the Secretary approves.

18. Revise § 927.22 to read as follows:

§ 927.22 Meetings for election of nominees.

(a) Nominations for members of the Fresh Pear Committee and their alternates shall be made at meetings of growers and handlers held in each of the districts designated in § 927.11 at such times and places designated by the Fresh Pear Committee.

(b) Nominations for grower and handler members of the Processed Pear Committee and their alternates shall be made at meetings of growers and handlers held in each of the districts designated in § 927.11 at such times and places designated by the Processed Pear Committee. Nominations for processor members of the Processed Pear Committee and their alternates shall be made at a meeting of processors at such time and place designated by the Processed Pear Committee.

19. Revise § 927.23 to read as follows:

§ 927.23 Voting.

Only growers in attendance at meetings for election of nominees shall participate in the nomination of grower members and their alternates, and only handlers in attendance at meetings for election of nominees shall participate in the nomination of handler members and their alternates, and only processors in attendance for election of nominees shall participate in the nomination of processor members and their alternates. A grower may participate only in the election held in the district in which he or she produces pears, and a handler may participate only in the election held in the district in which he or she handles pears. Each person may vote as a grower, handler or processor, but not a combination thereof. Each grower, handler and processor shall be entitled to cast one vote, on behalf of himself, his agents, partners, affiliates, subsidiaries, and representatives, for each nominee to be elected.

20. Revise § 927.24 to read as follows:

§ 927.24 Eligibility for membership.

Each grower member and each of his or her alternates shall be a grower, or an officer or employee of a corporate or LLC grower, who grows pears in the district in which and for which he or she is nominated and selected. Each handler member and each of his or her alternates shall be a handler, or an officer or employee of a handler, handling pears in the district in and for which he or she is nominated and selected. Each processor member and each of their alternates shall be a processor, or an officer or employee of a processor, who processes pears in the production area.

21. Revise § 927.26 to read as follows:

§ 927.26 Qualifications.

Any person prior to or within 15 days after selection as a member or as an alternate for a member of the Fresh Pear Committee or the Processed Pear Committee shall qualify by filing with the Secretary a written acceptance of the person's willingness to serve.

22. Revise § 927.27 to read as follows:

§ 927.27 Term of office.

The term of office of each member and alternate member of the Fresh Pear Committee and the Processed Pear Committee shall be for two years beginning July 1 and ending June 30: *Provided,* That the terms of office of one-half the initial members and alternates shall end June 30, 2006; and that beginning with the 2005–2006 fiscal period, no member shall serve more than three consecutive two-year terms unless specifically exempted by the Secretary. Members and alternate members shall serve in such capacities for the portion of the term of office for which they are selected and have qualified and until their respective successors are selected and have qualified. The terms of office of successor members and alternates shall be so determined that one-half of the total committee membership ends each June 30.

23. Revise § 927.28 to read as follows:

§ 927.28 Alternates for members.

The first alternate for a member shall act in the place and stead of the member for whom he or she is an alternate during such member's absence. In the event of the death, removal, resignation, or disqualification of a member, his or her first alternate shall act as a member until a successor for the member is selected and has qualified. The second alternate for a member shall serve in the place and stead of the member for whom he or she is an alternate whenever both the member and his or her first alternate are unable to serve. In the event that a member of the Fresh Pear Committee or the Processed Pear Committee and both that member's alternates are unable to attend a meeting, the member may designate any other alternate member from the same group (handler, processor, or grower) to serve in that member's place and stead.

24. Revise § 927.29 to read as follows:

§ 927.29 Vacancies.

To fill any vacancy occasioned by the failure of any person selected as a member or as an alternate for a member of the Fresh Pear Committee or the Processed Pear Committee to qualify, or in the event of death, removal, resignation, or disqualification of any qualified member or qualified alternate for a member, a successor for his or her unexpired term shall be nominated and selected in the manner set forth in §§ 927.20 to 927.35. If nominations to fill any such vacancy are not made within 20 days after such vacancy occurs, the Secretary may fill such vacancy without regard to nominations.

25. Revise § 927.30 to read as follows:

§ 927.30 Compensation and expenses.

The members and alternates for members shall serve without compensation, but may be reimbursed for expenses necessarily incurred by them in the performance of their respective duties.

26. Revise § 927.31 to read as follows:

§ 927.31 Powers.

The Fresh Pear Committee and the Processed Pear Committee shall have the following powers to exercise each independently:

(a) To administer, as specifically provided in §§ 927.20 to 927.35, the terms and provisions of this subpart:

(b) To make administrative rules and regulations in accordance with, and to effectuate, the terms and provisions of this subpart; and

(c) To receive, investigate, and report to the Secretary complaints of violations of the provisions of this subpart.

27. Revise § 927.32 to read as follows:

§ 927.32 Duties.

The duties of the Fresh Pear Committee and the Processed Pear Committee, each independently, shall be as follows:

(a) To act as intermediary between the Secretary and any grower, handler or processor;

(b) To keep minutes, books, and records which will reflect clearly all of the acts and transactions. The minutes, books, and records shall be subject at any time to examination by the Secretary or by such person as may be designated by the Secretary;

(c) To investigate, from time to time, and to assemble data on the growing, harvesting, shipping, and marketing conditions relative to pears, and to furnish to the Secretary such available information as may be requested;

(d) To perform such duties as may be assigned to it from time to time by the Secretary in connection with the

administration of section 32 of the Act to amend the Agricultural Adjustment Act, and for other purposes, Public Act No. 320, 74th Congress, approved August 24, 1935 (49 Stat. 774), as amended;

(e) To cause the books to be audited by one or more competent accountants at the end of each fiscal year and at such other times as the Fresh Pear Committee or the Processed Pear Committee may deem necessary or as the Secretary may request, and to file with the Secretary copies of any and all audit reports made;

(f) To appoint such employees agents, and representatives as it may deem necessary, and to determine the compensation and define the duties of each;

(g) To give the Secretary, or the designated agent of the Secretary, the same notice of meetings as is given to the members of the Fresh Pear Committee or the Processed Pear Committee;

(h) To select a chairman of the Fresh Pear Committee or the Processed Pear Committee and, from time to time, such other officers as it may deem advisable and to define the duties of each; and

(i) To submit to the Secretary as soon as practicable after the beginning of each fiscal period, a budget for such fiscal year, including a report in explanation of the items appearing therein and a recommendation as to the rate of assessment for such period.

28. Revise § 927.33 to read as follows:

§ 927.33 Procedure.

(a) *Quorum and voting.* A quorum at a meeting of the Fresh Pear Committee or the Processed Pear Committee shall consist of 75 percent of the number of committee members, or alternates then serving in the place of any members, respectively. Except as otherwise provided in § 927.52, all decisions of the Fresh Pear Committee or the Processed Pear Committee at any meeting shall require the concurring vote of at least 75 percent of those members present, including alternates then serving in the place of any members.

(b) *Mail voting.* The Fresh Pear Committee or the Processed Pear Committee may provide for members voting by mail, telecopier or other electronic means, telephone, or telegraph, upon due notice to all members. Promptly after voting by telephone or telegraph, each member thus voting shall confirm in writing, the vote so cast.

29. Revise § 927.34 to read as follows:

§ 927.34 Right of the Secretary.

The members and alternates for members and any agent or employee appointed or employed by the Fresh Pear Committee or the Processed Pear Committee shall be subject to removal or suspension by the Secretary at any time. Each and every regulation, decision, determination, or other act shall be subject to the continuing right of the Secretary to disapprove of the same at any time, and, upon such disapproval, shall be deemed null and void, except as to acts done in reliance thereon or in compliance therewith prior to such disapproval by the Secretary.

30. Revise § 927.35 to read as follows:

§ 927.35 Funds and other property.

(a) All funds received pursuant to any of the provisions of this subpart shall be used solely for the purposes specified in this subpart, and the Secretary may require the Fresh Pear Committee or the Processed Pear Committee and its members to account for all receipts and disbursements.

(b) Upon the death, resignation, removal, disqualification, or expiration of the term of office of any member or employee, all books, records, funds, and other property in his or her possession belonging to the Fresh Pear Committee or the Processed Pear Committee shall be delivered to his or her successor in office or to the Fresh Pear Committee or Processed Pear Committee, and such assignments and other instruments shall be executed as may be necessary to vest in such successor or in the Fresh Pear Committee or Processed Pear Committee full title to all the books, records, funds, and other property in the possession or under the control of such member or employee pursuant to this subpart.

§ 927.36 [Removed]

31. Remove § 927.36, Public advisors.

32. Revise § 927.40 to read as follows:

§ 927.40 Expenses.

The Fresh Pear Committee and the Processed Pear Committee are authorized, each independently, to incur such expenses as the Secretary finds may be necessary to carry out their functions under this subpart. The funds to cover such expenses shall be acquired by the levying of assessments as provided in § 927.41.

33. Revise § 927.41 to read as follows:

§ 927.41 Assessments.

(a) Assessments will be levied only upon handlers who first handle pears. Each handler shall pay assessments on all pears handled by such handler as the pro rata share of the expenses which the Secretary finds are reasonable and likely to be incurred by the Fresh Pear Committee or the Processed Pear Committee during a fiscal period. The payment of assessments for the maintenance and functioning of the Fresh Pear Committee or the Processed Pear Committee may be required under this part throughout the period such assessments are payable irrespective of whether particular provisions thereof are suspended or become inoperative.

(b)(1) Based upon a recommendation of the Fresh Pear Committee or other available data, the Secretary shall fix three base rates of assessment for pears that handlers shall pay on pears handled for the fresh market during each fiscal period. Such base rates shall include one rate of assessment for any or all varieties or subvarieties of pears classified as summer/fall; one rate of assessment for any or all varieties or subvarieties of pears, classified as winter; and one rate of assessment for any or all varieties or subvarieties of pears classified as other. Upon recommendation of the Fresh Pear Committee or other available data, the Secretary may also fix supplemental rates of assessment on individual varieties or subvarieties categorized within the above-defined assessment classifications to secure sufficient funds to provide for projects authorized under § 927.47. At any time during the fiscal period when it is determined on the basis of a Fresh Pear Committee recommendation or other information that different rates are necessary for fresh pears or for any varieties or subvarieties, the Secretary may modify those rates of assessment and such new rate shall apply to any or all varieties or subvarieties that are shipped during the fiscal period for fresh market.

(2) Based upon a recommendation of the Processed Pear Committee or other available data, the Secretary shall fix three base rates of assessment for pears that handlers shall pay on pears handled for processing during each fiscal period. Such base rates shall include one rate of assessment for any or all varieties or subvarieties of pears classified as summer/fall; one rate of assessment for any or all varieties or subvarieties of pears, classified as winter; and one rate of assessment for any or all varieties or subvarieties of pears classified as other. Upon recommendation of the Processed Pear Committee or other available data, the Secretary may also fix supplemental rates of assessment on individual varieties or subvarieties categorized within the above-defined assessment classifications to secure sufficient funds to provide for projects authorized under

§ 927.47. At any time during the fiscal period when it is determined on the basis of a Processed Pear Committee recommendation or other information that different rates are necessary for pears for processing or for any varieties or subvarieties, the Secretary may modify those rates of assessment and such new rate shall apply to any or all varieties or subvarieties of pears that are shipped during the fiscal period for processing.

(c) Based on the recommendation of the Fresh Pear Committee, the Processed Pear Committee or other available data, the Secretary may establish additional base rates of assessments, or change or modify the base rate classifications defined in paragraphs (a) and (b) of this section.

(d) The Fresh Pear Committee or the Processed Pear Committee may impose a late payment charge on any handler who fails to pay any assessment within the time prescribed. In the event the handler thereafter fails to pay the amount outstanding, including the late payment charge, within the prescribed time, the Fresh Pear Committee or the Processed Pear Committee may impose an additional charge in the form of interest on such outstanding amount. The Fresh Pear Committee or the Processed Pear Committee, with the approval of the Secretary, shall prescribe the amount of such late payment charge and rate of interest.

(e) In order to provide funds to carry out the functions of the Fresh Pear Committee or the Processed Pear Committee prior to commencement of shipments in any season, handlers may make advance payments of assessments, which advance payments shall be credited to such handlers and the assessments of such handlers shall be adjusted so that such assessments are based upon the quantity of each variety or subvariety of pears handled by such handlers during such season. Further, payment discounts may be authorized by the Fresh Pear Committee or the Processed Pear Committee upon the approval of the Secretary to handlers making such advance assessment payments.

34. Revise § 927.42 to read as follows:

§ 927.42 Accounting.

(a) If, at the end of a fiscal period, the assessments collected are in excess of expenses incurred, the Fresh Pear Committee or the Processed Pear Committee may carryover such excess into subsequent fiscal periods as a reserve: *Provided,* That funds already in the reserve do not exceed approximately one fiscal period's expenses. Such reserve may be used to cover any expense authorized under this part and to cover necessary expenses of liquidation in the event of termination of this part. Any such excess not retained in a reserve or applied to any outstanding obligation of the person from whom it was collected shall be refunded proportionately to the persons from whom it was collected. Upon termination of this part, any funds not required to defray the necessary expenses of liquidation shall be disposed of in such manner as the Secretary may determine to be appropriate: *Provided,* That to the extent practical, such funds shall be returned pro rata to the persons from whom such funds were collected.

(b) All funds received pursuant to the provisions of this part shall be used solely for the purpose specified in this part and shall be accounted for in the manner provided in this part. The Secretary may at any time require the Fresh Pear Committee or the Processed Pear Committee and its members to account for all receipts and disbursements.

35. Revise § 927.43 to read as follows:

§ 927.43 Use of funds.

From the funds acquired pursuant to § 927.41 the Fresh Pear Committee and the Processed Pear Committee, each independently, shall pay the salaries of its employees, if any, and pay the expenses necessarily incurred in the performance of the duties of the Fresh Pear Committee or the Processed Pear Committee.

§ 927.44 [Removed]

36. Remove § 927.44, Collection of unpaid assessments.

37. Revise § 927.45 to read as follows:

§ 927.45 Contributions.

The Fresh Pear Committee or the Processed Pear Committee may accept voluntary contributions but these shall only be used to pay expenses incurred pursuant to § 927.47. Furthermore, such contributions shall be free from any encumbrances by the donor and the Fresh Pear Committee or the Processed Pear Committee shall retain complete control of their use.

38. Revise § 927.47 to read as follows:

§ 927.47 Research and development.

The Fresh Pear Committee or the Processed Pear Committee, with the approval of the Secretary, may establish or provide for the establishment of production and post-harvest research, or marketing research and development projects designed to assist, improve, or promote the marketing, distribution, and consumption of pears. Such projects may provide for any form of marketing promotion, including paid advertising. The expense of such projects shall be paid from funds collected pursuant to §§ 927.41 and 927.45. Expenditures for a particular variety or subvariety of pears shall approximate the amount of assessments and voluntary contributions collected for that variety or subvariety of pears.

39. Revise § 927.50 to read as follows:

§ 927.50 Marketing policy.

(a) It shall be the duty of the Fresh Pear Committee to investigate, from time to time, supply and demand conditions relative to pears and each grade, size, and quality of each variety or subvariety thereof. Such investigations shall be with respect to the following:

(1) Estimated production of each variety or subvariety of pears and of each grade, size, and quality thereof;

(2) Prospective supplies and prices of pears and other fruits, both in fresh and processed form, which are competitive to the marketing of pears;

(3) Prospective exports of pears and imports of pears from other producing areas;

(4) Probable harvesting period for each variety or subvariety of pears;

(5) The trend and level of consumer income;

(6) General economic conditions; and

(7) Other relevant factors.

(b) On or before August 1 of each year, the Fresh Pear Committee shall recommend regulations to the Secretary if it finds, on the basis of the foregoing investigations, that such regulation as is provided in § 927.51 will tend to effectuate the declared policy of the act.

(c) In the event the Fresh Pear Committee at any time finds that by reason of changed conditions, any regulation issued pursuant to § 927.51 should be modified, suspended, or terminated, it shall so recommend to the Secretary.

40. Revise § 927.51 to read as follows:

§ 927.51 Issuance of regulations; and modification, suspension, or termination thereof.

(a) Whenever the Secretary finds, from the recommendations and information submitted by the Fresh Pear Committee, or from other available information, that regulation, in the manner specified in this section, of the shipment of fresh pears would tend to effectuate the declared policy of the act, he or she shall so limit the shipment of such pears during a specified period or periods. Such regulation may:

(1) Limit the total quantity of any grade, size, quality, or combinations

thereof, of any variety or subvariety of pears grown in any district and may prescribe different requirements applicable to shipments to different export markets;

(2) Limit, during any period or periods, the shipment of any particular grade, size, quality, or any combination thereof, of any variety or subvariety, of pears grown in any district or districts of the production area; and

(3) Provide a method, through rules and regulation issued pursuant to this part, for fixing markings on the container or containers, which may be used in the packaging or handling of pears, including appropriate logo or other container markings to identify the contents thereof.

(b) Whenever the Secretary finds, from the recommendations and information submitted by the Fresh Pear Committee, or from other available information, that a regulation should be modified, suspended, or terminated with respect to any or all shipments of fresh pears grown in any district in order to effectuate the declared policy of the act, he or she shall so modify, suspend, or terminate such regulation. If the Secretary finds, from the recommendations and information submitted by the Fresh Pear Committee, or from other available information, that a regulation obstructs or does not tend to effectuate the declared policy of the act, he or she shall suspend or terminate such regulation. On the same basis and in like manner, the Secretary may terminate any such modification or suspension.

41. Revise § 927.52 to read as follows:

§ 927.52 Prerequisites to recommendations.

(a) Decisions of the Fresh Pear Committee or the Processed Pear Committee with respect to any recommendations to the Secretary pursuant to the establishment or modification of a supplemental rate of assessment for an individual variety or subvariety of pears shall be made by affirmative vote of not less than 75 percent of the applicable total number of votes, computed in the manner hereinafter described in this section, of all members. Decisions of the Fresh Pear Committee pursuant to the provisions of § 927.50 shall be made by an affirmative vote of not less than 80 percent of the applicable total number of votes, computed in the manner hereinafter prescribed in this section, of all members.

(b) With respect to a particular variety or subvariety of pears, the applicable total number of votes shall be the aggregate of the votes allotted to the members in accordance with the following: Each member shall have one vote as an individual and, in addition, shall have a vote equal to the percentage of the vote of the district represented by such member; and such district vote shall be computed as soon as practical after the beginning of each fiscal period on either:

(1) The basis of one vote for each 25,000 boxes (except 2,500 boxes for varieties or subvarieties with less than 200,000 standard boxes or container equivalents) of the average quantity of such variety or subvariety produced in the particular district and shipped therefrom during the immediately preceding three fiscal periods; or

(2) Such other basis as the Fresh Pear Committee or the Processed Pear Committee may recommend and the Secretary may approve. The votes so allotted to a member may be cast by such member on each recommendation relative to the variety or subvariety of pears on which such votes were computed.

42. Revise § 927.53 to read as follows:

§ 927.53 Notification.

(a) The Fresh Pear Committee shall give prompt notice to growers and handlers of each recommendation to the Secretary pursuant to the provisions of § 927.50.

(b) The Secretary shall immediately notify the Fresh Pear Committee of the issuance of each regulation and of each modification, suspension, or termination of a regulation and the Fresh Pear Committee shall give prompt notice thereof to growers and handlers.

§ 927.54 [Removed]

42–a. Remove § 927.54, Exemption Certificate.

43. Amend § 927.60 by revising paragraph (a) and adding a new paragraph (c) to read as follows:

§ 927.60 Inspection and certification.

(a) Handlers shall ship only fresh pears inspected by the Federal-State Inspection Service or under a program developed by the Federal-State Inspection Service: except, that such inspection and certification of shipments of pears may be performed by such other inspection service as the Fresh Pear Committee, with the approval of the Secretary, may designate. Promptly after shipment of any pears, the handler shall submit, or cause to be submitted, to the Fresh Pear Committee a copy of the inspection certificate issued on such shipment.

* * * * *

(c) The Fresh Pear Committee may, with the approval of the Secretary, prescribe rules and regulations modifying or eliminating the requirement for mandatory inspection and certification of shipments: *Provided*, That an adequate method of ensuring compliance with quality and size requirements is developed.

44. Revise § 927.65 to read as follows:

§ 927.65 Exemption from regulation.

(a) Nothing contained in this subpart shall limit or authorize the limitation of shipment of pears for consumption by charitable institutions or distribution by relief agencies, nor shall any assessment be computed on pears so shipped. The Fresh Pear Committee or the Processed Pear Committee may prescribe regulations to prevent pears shipped for either of such purposes from entering commercial channels of trade contrary to the provisions of this subpart.

(b) The Fresh Pear Committee or the Processed Pear Committee may prescribe rules and regulations, to become effective upon the approval of the Secretary, whereby quantities of pears or types of pear shipments may be exempted from any or all provisions of this subpart.

45. Revise § 927.70 to read as follows:

§ 927.70 Reports.

(a) Upon the request of the Fresh Pear Committee or the Processed Pear Committee, and subject to the approval of the Secretary, each handler shall furnish to the aforesaid committee, respectively, in such manner and at such times as it prescribes, such information as will enable it to perform its duties under this subpart.

(b) All such reports shall be held under appropriate protective classification and custody by the Fresh Pear Committee or the Processed Pear Committee, or duly appointed employees thereof, so that the information contained therein which may adversely affect the competitive position of any handler in relation to other handlers will not be disclosed. Compilations of general reports from data submitted by handlers are authorized subject to the prohibition of disclosure of individual handlers identities or operations.

(c) Each handler shall maintain for at least two succeeding years such records of the pears received and of pears disposed of, by such handler as may be necessary to verify reports pursuant to this section.

46. Revise § 927.75 to read as follows:

§ 927.75 Liability.

No member or alternate for a member of the Fresh Pear Committee or the Processed Pear Committee, nor any

employee or agent thereof, shall be held personally responsible, either individually or jointly with others, in any way whatsoever, to any party under this subpart or to any other person for errors in judgment, mistakes, or other acts, either of commission or omission, as such member, alternate for a member, agent or employee, except for acts of dishonesty, willful misconduct, or gross negligence.

47. Revise § 927.76 to read as follows:

§ 927.76 Agents.

The Secretary may name, by designation in writing, any person, including any officer or employee of the Government or any bureau or division in the Department of Agriculture to act as his or her agent or representative in connection with any of the provisions of this subpart.

48. Revise § 927.77 to read as follows:

§ 927.77 Effective time.

The provisions of this subpart and of any amendment thereto shall become effective at such time as the Secretary may declare, and shall continue in force until terminated in one of the ways specified in § 927.78.

49. Amend § 927.78 by revising paragraphs (b), (c), and (d) to read as follows:

§ 927.78 Termination.

* * * * *

(b) The Secretary shall terminate or suspend the operation of any or all of the provisions of this subpart whenever he or she finds that such operation obstructs or does not tend to effectuate the declared policy of the act.

(c) The Secretary shall terminate the provisions of this subpart applicable to fresh pears for market or pears for processing at the end of any fiscal period whenever the Secretary finds, by referendum or otherwise, that such termination is favored by a majority of growers of fresh pears for market or pears for processing, respectively: *Provided*, That such majority has during such period produced more than 50 percent of the volume of fresh pears for market or pears for processing, respectively, in the production area. Such termination shall be effective only if announced on or before the last day of the then current fiscal period.

(d) The Secretary shall conduct a referendum within every six-year period beginning on the date this section becomes effective, to ascertain whether continuance of the provisions of this subpart applicable to fresh pears for market or pears for processing are favored by producers of pears for the fresh market and pears for processing, respectively. The Secretary may terminate the provisions of this subpart at the end of any fiscal period in which the Secretary has found that continuance of this subpart is not favored by producers who, during a representative period determined by the Secretary, have been engaged in the production of fresh pears for market or pears for processing in the production area: *Provided,* That termination of the order shall be effective only if announced on or before the last day of the then current fiscal period.

* * * * *

50. Revise § 927.79 to read as follows:

§ 927.79 Proceedings after termination.

(a) Upon the termination of this subpart, the members of the Fresh Pear Committee or the Processed Pear Committee then functioning shall continue as joint trustees for the purpose of liquidating all funds and property then in the possession or under the control of the Fresh Pear Committee or the Processed Pear Committee, including claims for any funds unpaid or property not delivered at the time of such termination.

(b) The joint trustees shall continue in such capacity until discharged by the Secretary; from time to time account for all receipts and disbursements; deliver all funds and property on hand, together with all books and records of the Fresh Pear Committee or the Processed Pear Committee and of the joint trustees, to such person as the Secretary shall direct; and, upon the request of the Secretary, execute such assignments or other instruments necessary and appropriate to vest in such person full title and right to all of the funds, property, or claims vested in the Fresh Pear Committee or the Processed Pear Committee or in said joint trustees.

(c) Any funds collected pursuant to this subpart and held by such joint trustees or such person over and above the amounts necessary to meet outstanding obligations and the expenses necessarily incurred by the joint trustees or such other person in the performance of their duties under this subpart, as soon as practicable after the termination hereof, shall be returned to the handlers pro rata in proportion to their contributions thereto.

(d) Any person to whom funds, property, or claims have been transferred or delivered by the Fresh Pear Committee or the Processed Pear Committee or its members, upon direction of the Secretary, as provided in this section, shall be subject to the same obligations and duties with respect to said funds, property, or claims as are imposed upon the members or upon said joint trustees.

51. Revise § 927.80 to read as follows:

§ 927.80 Amendments.

Amendments to this subpart may be proposed from time to time by the Fresh Pear Committee or the Processed Pear Committee or by the Secretary.

Dated: January 5, 2005.

Kenneth C. Clayton,

Associate Administrator, Agricultural Marketing Service.

[FR Doc. 05–579 Filed 1–12–05; 8:45 am]

BILLING CODE 3410–02–P

Federal Register

Thursday,
January 13, 2005

Part IV

Department of Homeland Security

Transportation Security Administration

49 CFR Part 1572

Hazmat Fee Rule: Fees for Security Threat Assessments for Hazmat Drivers; Final Rule

DEPARTMENT OF HOMELAND SECURITY

Transportation Security Administration

49 CFR Part 1572

[Docket No. TSA–2004–19605; Amendment No. 1572–5]

RIN 1652–AA33

Hazmat Fee Rule: Fees for Security Threat Assessments for Hazmat Drivers

AGENCY: Transportation Security Administration (TSA), Department of Homeland Security (DHS).

ACTION: Final rule.

SUMMARY: In response to recent statutory requirements, the Transportation Security Administration (TSA) is establishing a fee for security threat assessments that TSA is required to perform on individuals who apply for or renew a hazardous materials endorsement for a commercial driver's license. TSA also is establishing a fee for collection and transmission of fingerprints and biographical information, which is necessary to perform the security threat assessments. TSA intends to use fees collected under this rule to pay for the costs of the security threat assessments and the costs of collection and transmission of fingerprints and biographical information.

DATES: This rule is effective January 31, 2005.

ADDRESSES: You may obtain an electronic copy of this final rule using the Internet by—

(1) Searching the Department of Transportation's electronic Docket Management System (DMS) web page (*http://dms.dot.gov/search*);

(2) Accessing the Government Printing Office's web page at *http://www.access.gpo.gov/su_docs/aces/aces140.html*; or

(3) Visiting TSA's Law and Policy web page at *http://www.tsa.dot.gov/public/index.jsp*.

In addition, copies are available by writing or calling the individual in the **FOR FURTHER INFORMATION CONTACT** section. Make sure to identify the docket number of this rulemaking.

You may also review the public docket in person in the Docket Office between 9 a.m. and 5 p.m., Monday through Friday, except Federal holidays. The Docket Office is on the plaza level of the Department of Transportation.

FOR FURTHER INFORMATION CONTACT: *For payment eligibility questions, such as who is required to pay the fees:* George J. Petersen, Hazmat Program Office, TSA–19, Transportation Security Administration Headquarters, 601 South 12th Street, Arlington, VA 22202; telephone: (571) 227–2215; e-mail *George.J.Petersen@dhs.gov*.

For billing questions: Randall Fiertz, Office of Revenue, TSA–14, Transportation Security Administration Headquarters, 601 South 12th Street, Arlington, VA 22202; telephone: (571) 227–2323; e-mail: *TSA-Fees@dhs.gov*.

For legal questions: Dion Casey, Office of Chief Counsel, TSA–2, Transportation Security Administration Headquarters, 601 South 12th Street, Arlington, VA 22202; telephone: (571) 227–2663; e-mail: *Dion.Casey@dhs.gov*.

SUPPLEMENTARY INFORMATION:

Abbreviations and Terms Used in This Document

ATF—Bureau of Alcohol, Tobacco, Firearms, and Explosives
AAMVA—Association of American Motor Vehicle Administrators
ATSA—Aviation and Transportation Security Act
BLS—Bureau of Labor Statistics
BTS—Bureau of Transportation Statistics
CDL—commercial driver's license
CDLIS—Commercial Drivers License Information System
CFR—Code of Federal Regulations
CHRC—criminal history records check
DHS—Department of Homeland Security
DMV—Department of Motor Vehicles
DOT—Department of Transportation
FBI—Federal Bureau of Investigation
FMCSA—Federal Motor Carrier Safety Administration
HME—hazardous materials endorsement
ICE—Bureau of Immigration and Customs Enforcement
IFR—interim final rule
NPRM—notice of proposed rulemaking
PRA—Paperwork Reduction Act
SEA—Safe Explosives Act
TSA—Transportation Security Administration

I. Background

On September 11, 2001, several terrorist attacks were perpetrated against the United States. Those attacks resulted in catastrophic human casualties and property damage. In response to those attacks, Congress passed the Aviation and Transportation Security Act (ATSA), which established the Transportation Security Administration (TSA).[1] TSA was created as an agency within the Department of Transportation (DOT), operating under the direction of the Under Secretary of Transportation for Security. As of March 1, 2003, pursuant to the Homeland Security Act of 2002, TSA became an agency of the Department of Homeland Security (DHS), and the functions of the Under Secretary were ultimately assigned to the Assistant Secretary of Homeland Security for TSA.[2] TSA continues to possess the statutory authority that ATSA established. ATSA granted to the Assistant Secretary responsibility for security in all modes of transportation.[3]

ATSA authorizes TSA to identify individuals who pose a threat to transportation security.[4] This authority includes conducting background checks on individuals in the transportation industries. The background checks may include collecting fingerprints to determine if an individual has a criminal conviction or the use of a name and other identifying characteristics to determine whether an individual has committed international criminal offenses or immigration offenses.

Based on his functions, duties, and powers, the Assistant Secretary is situated to determine whether sufficient cause exists to believe that an individual poses a threat to transportation security.

A. USA PATRIOT Act

The Uniting and Strengthening America by Providing Appropriate Tools Required to Intercept and Obstruct Terrorism (USA PATRIOT) Act was enacted on October 25, 2001.[5] Section 1012 of the USA PATRIOT Act amended 49 U.S.C. Chapter 51 by adding a new section 5103a titled, ''Limitation on issuance of hazmat licenses.''

Section 5103a(a)(1) provides:

> A State may not issue to any individual a license to operate a motor vehicle transporting in commerce a hazardous material unless the Secretary of Transportation has first determined, upon receipt of a notification under subsection (c)(1)(B), that the individual does not pose a security risk warranting denial of the license.
>
> Section 5103a(a)(2) subjects license renewals to the same requirements.

Section 5103a(c) requires the Attorney General, upon the request of a State in connection with issuance of a hazardous materials endorsement (HME) for a commercial driver's license (CDL), to carry out a background records check of the individual applying for the

[1] Pub. L. 107–71, November 19, 2001, 115 Stat. 597.

[2] Section 403 of Pub. L. 107–296, November 25, 2002, 116 Stat. 2135, codified at 6 U.S.C. 203.

[3] 49 U.S.C. 114(d).

[4] 4 49 U.S.C. 114(f)(2).

[5] Pub. L. 107–56, October 25, 2001, 115 Stat. 272.

endorsement and, upon completing the check, to notify the Secretary of Transportation of the results. The Secretary of Transportation then determines whether the individual poses a security threat warranting denial of the endorsement. The Secretary of Transportation delegated the responsibilities of Section 5103a to the Under Secretary of Transportation for Security.[6] Pursuant to section 403 of the Homeland Security Act of 2002, these responsibilities transferred to the Secretary of Homeland Security.[7] The Secretary then delegated these responsibilities to the Assistant Secretary of Homeland Security for TSA.

The background records check must consist of: (1) A check of the relevant criminal history databases; (2) in the case of an alien, a check of the relevant databases to determine the status of the alien under U.S. immigration laws; and (3) as appropriate, a check of the relevant international databases through Interpol-U.S. National Central Bureau or other appropriate means.[8] As explained in further detail below, TSA is performing a more comprehensive check than required by Section 5103a, including a review of pertinent databases to determine whether an individual poses a security threat. TSA has the authority to perform such comprehensive checks under ATSA.[9]

B. Safe Explosives Act

Congress enacted the Safe Explosives Act (SEA) on November 25, 2002.[10] Sections 1121–1123 of the SEA amended section 842(i) of title 18, United States Code, by adding several categories to the list of persons who may not lawfully ''ship or transport any explosive in or affecting interstate or foreign commerce'' or ''receive or possess any explosive which has been shipped or transported in or affecting interstate or foreign commerce.'' Prior to the amendment, 18 U.S.C. 842(i) prohibited the transportation of explosives by any person under indictment for or convicted of a felony, a fugitive from justice, an unlawful user or addict of any controlled substance, and any person who had been adjudicated as a mental defective or committed to a mental institution. The amendment added three new categories to the list of prohibited persons: aliens (with certain limited exceptions), persons dishonorably discharged from the armed forces, and former U.S. citizens who have renounced their citizenship. Individuals who violate 18 U.S.C. 842(i) are subject to criminal prosecution.[11] These incidents are investigated by the Bureau of Alcohol, Tobacco, Firearms, and Explosives (ATF) of the Department of Justice and referred, as appropriate, to the United States Attorneys.

However, 18 U.S.C. 845(a)(1) provides an exception to section 842(i) for ''any aspect of the transportation of explosive materials via railroad, water, highway, or air which are regulated by the United States Department of Transportation and agencies thereof, and which pertains to safety.'' Under this exception, if DOT regulations address the transportation security issues of persons engaged in a particular aspect of the safe transportation of explosive materials, then those persons are not subject to prosecution under 18 U.S.C. 842(i) while they are engaged in the transportation of explosives in commerce.[12]

This exception was triggered when TSA issued an interim final rule on May 5, 2003 (May 5 IFR), discussed below, in coordination with the Federal Motor Carrier Safety Administration (FMCSA) and Research and Special Programs Administration (RSPA), agencies within the DOT.

C. The May 5, 2003 Interim Final Rule

To comply with the mandates of the USA PATRIOT Act, and to trigger the exception in 18 U.S.C. 845(a)(1) for the transportation of explosives, TSA issued an interim final rule in coordination with FMCSA and RSPA on May 5, 2003.[13] The May 5 IFR established security threat assessment standards for determining whether an individual poses a security threat warranting denial of an HME. Under the May 5 IFR, TSA determined that an individual poses a security threat if he or she: (1) Is an alien (unless he or she is a lawful permanent resident) or a U.S. citizen who has renounced his or her U.S. citizenship; (2) is wanted or under indictment for certain felonies; (3) was convicted or found not guilty by reason of insanity of any of certain felonies in military or civilian court within the past 7 years or was released from incarceration for committing any of the specified felonies within the past 5 years; (4) has been adjudicated as a mental defective or involuntarily committed to a mental institution; or (5) is considered to pose a security threat based on a review of pertinent databases.

The May 5 IFR also established conditions under which an individual who has been determined to be a security threat may appeal the determination, and the procedures that TSA follows when considering an

[6] 68 FR 10988 (March 7, 2003).

[7] Pub. L. 107–296, November 25, 2002.

[8] The National Crime Prevention and Privacy Compact (Compact), codified at 42 U.S.C. 14616, establishes the Compact Council, which is authorized to establish legal criteria governing criminal history record checks for non-criminal justice purposes. The Compact Council is composed of 15 members, appointed by the Attorney General. As a general rule, the Compact requires the submission of fingerprints for purposes of gaining access to criminal history databases for non-criminal justice purposes.

[9] See 49 U.S.C. 114(f).

[10] Pub. L. 107–296, November 25, 2002, 116 Stat. 2280, codified at 18 U.S.C. 842.

[11] The penalty for violation of 18 U.S.C. 842(i) is up to ten years imprisonment and a fine of up to $250,000.

[12] Explosives are among the categories of substances that are defined as hazardous materials under DOT regulations. See 49 CFR 383.5 and 173.50.

[13] 68 FR 23852. The rule was codified at 49 CFR parts 1570 and 1572. On the same date, FMCSA issued a companion rule prohibiting States from issuing, renewing, transferring, or upgrading a CDL with an HME unless TSA has first determined that the individual applying for the HME does not pose a security threat warranting denial of the HME. 68 FR 23844. Because FMCSA is a part of DOT, and because the FMCSA and TSA rules regulate the transport of hazardous materials, including explosives, with regard to safety, the exception in 18 U.S.C. 845(a)(1) was triggered.

appeal.[14] In addition, the May 5 IFR provided a waiver process for those individuals who otherwise could not obtain an HME due to a disqualifying felony conviction or mental defect.[15] Finally, the May 5 IFR prohibited an individual from holding, and a State from issuing, renewing, or transferring an HME for a driver unless the individual has met the TSA security threat assessment standards or has been granted a waiver.[16] The May 5 IFR was to take effect in November 2003.[17]

In the May 5 IFR, TSA requested and received comments from the States, labor organizations, and representatives of the trucking industry. In addition, TSA held working group sessions with the States to discuss potential fingerprinting systems that would achieve the statutory requirements, but would not adversely impact the States. Based on the comments received and the working sessions with the States, TSA issued a technical amendment in November 2003 to extend the date on which fingerprints and applicant information must be submitted.[18] A majority of the States could not implement the program by November, and TSA was not able to set the fee levels through rulemaking to cover TSA's implementation costs.[19] This technical amendment required the States either to submit fingerprints and applicant information by April 1, 2004, or request an extension of time and produce a fingerprint collection plan by April 1, 2004. All States were required to have the fingerprint collection program in place as of December 1, 2004.

In response to the November 2003 technical amendment, a majority of the States asked for an extension of time, because they were not ready to begin collecting applicant information or fingerprints by April 1, 2004. Therefore, on April 6, 2004, TSA published a final rule removing the April 1 date and establishing January 31, 2005, as the date on which States must begin complying with the requirements.[20]

D. Hazmat Program Rule

On November 24, 2004, TSA issued an interim final rule, titled ''Security Threat Assessment for Individuals Applying for a Hazardous Materials Endorsement for a Commercial Driver's License'' RIN 1652-AA17 (the Hazmat Program Rule).[21] In the Hazmat Program Rule, TSA made several amendments to the May 5 IFR. TSA also required States to choose between the following two fingerprint and applicant information collection options: (1) The State collects and transmits the fingerprints and applicant information of individuals who apply for or renew an HME; or (2) the State allows an entity approved by TSA (TSA agent) to collect and transmit the fingerprints and applicant information of such individuals. TSA required States to notify TSA in writing of their choice by December 27, 2004. TSA noted that if a State did not notify TSA in writing of its choice by that date, TSA would assume that the State had chosen the second option and would work with the State to establish a system for a TSA agent to collect fingerprints and applicant information in the State. The Hazmat Program Rule requires a State to operate under the option it chooses until at least February 1, 2008.

Seventeen States opted to collect and transmit fingerprints and applicant information. The remaining 34 States opted to allow a TSA agent to perform those services.[22] Information on which States have chosen which option is available on the TSA Web site at *http://www.tsa.gov/public/interapp/editorial/editorial_1735.xml*.

E. Fee Authority

On October 1, 2003, Congress enacted legislation directing TSA to collect reasonable fees to cover the costs of providing credentialing and background investigations in the transportation field, including implementation of the USA PATRIOT Act requirements.[23] Section 520 of the Department of Homeland Security Appropriations Act, 2004 (2004 Appropriations Act) authorizes TSA to collect fees to pay for the following costs: Conducting or obtaining a criminal history records check (CHRC); reviewing available law enforcement databases, commercial databases, and records of other governmental and international agencies; reviewing and adjudicating requests for waivers and appeals of TSA decisions; and any other costs related to performing the background records check or providing the credential.

Section 520 of the 2004 Appropriations Act mandates that any fee collected be available for expenditure only to pay for the costs incurred in providing services in connection with performing the background check or providing the credential. The fee must remain available until expended.

F. Fee NPRM

On November 10, 2004, TSA issued a notice of proposed rulemaking (Fee NPRM) to propose a fee for the security threat assessments that TSA is required to perform on individuals who apply for or renew an HME for a CDL (Threat Assessment Fee).[24] The Fee NPRM also proposed a fee for the collection and transmission of fingerprints and other HME applicant information necessary to perform the security threat assessments (Information Collection Fee). The Fee NPRM also proposed that HME applicants remit the fee required by the Federal Bureau of Investigation (FBI) for performing the CHRC on behalf of government agencies for non-government applicants. In addition, the Fee NPRM proposed procedures for States and entities approved by TSA to collect, handle, and remit to TSA those fees. TSA requested public comment on all aspects of the Fee NPRM.

[14] Under the May 5 IFR, an individual could appeal a determination if the individual believes that he or she does not meet the criteria warranting revocation. For example, an individual could appeal because he or she believes the criminal record to be incorrect, or if the individual's conviction for a disqualifying criminal offense was pardoned, expunged, or overturned on appeal.

[15] Such individuals were permitted to apply for a waiver if they could demonstrate that they are rehabilitated or are no longer a danger to themselves or others.

[16] In the interim final rule issued on November 24, 2004 (Hazmat Program Rule), discussed herein, TSA amended the May 5 IFR to permit a driver who successfully completes the TSA security threat assessment and receives an HME in one State to transfer the HME to another State without undergoing another TSA security threat assessment until the date the HME would expire in the issuing State. For instance, if the renewal period in Virginia is once every 4 years, a driver who obtains his HME in Virginia in 2005 and moves to West Virginia in 2006, where the renewal period is once every 5 years, is required to undergo a new security threat assessment in 2009 in West Virginia, rather than within 30 days of moving into West Virginia or in 2010. FMCSA's regulations require renewing the HME at least once every five years, so drivers across the country have nearly identical renewal periods. (49 CFR 383.141(d)). Thus, there is no risk that any driver will go more that five years without a security threat assessment.

[17] An exception to this effective date was a provision in the May 5 IFR that required any holder of an HME who had committed a disqualifying offense to surrender the HME to the State by September 2003.

[18] 68 FR 63033 (November 7, 2003).

[19] Congress did not grant TSA the statutory authority required for rulemaking to set and collect fees for costs related to background checks and credentialing until October 1, 2003, per section 520 of the 2004 Homeland Security Appropriations Act (Pub. L. 108–90, October 1, 2003, 117 Stat. 1137).

[20] 69 FR 17969 (April 6, 2004).

[21] 69 FR 68720 (November 24, 2004).

[22] TSA notes that as defined in the Hazmat Program Rule, the term ''State'' includes the District of Columbia. Thus, for purposes of the hazmat program there are 51 States.

[23] Department of Homeland Security Appropriations Act, 2004, Section 520, Pub. L. 108–90, October 1, 2003, 117 Stat. 1156 (6 U.S.C. 469) (2004 Appropriations Act).

[24] 69 FR 65332, November 10, 2004.

II. Response to Public Comments

TSA received approximately 25 comments on the Fee NPRM from individual commercial drivers, labor organizations, trucking industry associations, State Departments of Motor Vehicles, associations representing the agricultural, chemical, explosives, and petroleum industries, and associations representing State governments. The discussion below groups the comments by issue.

A. Responsibility for the Fees

Labor organizations and individual drivers commented that drivers should not bear the full cost of the threat assessments conducted under the Hazmat Program Rule. They noted that the statute authorizing TSA to collect fees for threat assessments (Section 520 of the 2004 Appropriations Act) does not require TSA to collect the fees from the driver. They argued that the fees should be divided among all of the affected parties, including employers and the Federal Government.

TSA notes that the May 5 IFR specified that the driver or the driver's employer was responsible for paying the fee charged by the entity that collected the driver's fingerprints and generated the driver's criminal history.[25] The Hazmat Program Rule contains a similar provision specifying that the HME applicant or the applicant's employer is responsible for the TSA and FBI fees.[26] The Hazmat Program Rule provides that the driver or the driver's employer is responsible for paying the required fees. Some commenters noted that a commercial driver's employer typically pays the commercial driver's licensing fees. Whether the driver or the driver's employer pays the fees is a matter that must be resolved between drivers and their employers.

As for the Federal Government subsidizing the fees, when Congress enacted Sec. 520 of the 2004 Appropriations Act it expressed its intent that TSA seek user fee funding to cover the costs of providing credentialing and background investigations in the transportation field. The hazmat program is an example of a credentialing and background investigation program that was intended to be supported by user fees. That said, TSA has subsidized the program to some extent by bearing the costs of the name-based threat assessments for hazmat drivers that TSA performed prior to full implementation of the hazmat program. Moreover, TSA notes that certain overhead costs that directly support the program, such as those for human resources, financial reporting and accounting, and TSA executive management support, have not been included in the user fees.

B. Amount of the Fees

Several commenters stated that the estimated total fee range of $83–$103 is unreasonable. They noted that the proposed fees are significantly higher than fees for security threat assessments in other transportation-related programs, such as the security threat assessments TSA proposed for individuals requiring unescorted access to air cargo (air cargo handlers) ($39)[27] and drivers seeking certification under the Free and Secure Trade (FAST) program ($50). They questioned why TSA is requiring the trucking industry to absorb higher fees.

TSA notes that while there are some similarities to other Federal Government background check programs, each program is unique. Differences in cost arise due to the legal requirements associated with certain background checks as well as the differences in how the agency requiring the background check is able to collect fingerprints and other information needed from the population being checked. There are also differences in the legislative authorities and appropriations allocated to agencies for supporting the programs. These differences determine whether the programs are totally funded through appropriated funding, partially funded through user fees, or fully funded through user fees.

As noted in the Fee NPRM, the total proposed fee range of $83 to $103 per applicant for the hazmat driver threat assessment included three parts. Part one was for the collection and transmission of fingerprints and other applicant information (Information Collection Fee). This service will either be provided directly by individual States or by a TSA agent who will be located at various sites within each State. If a TSA agent provided this service, the proposed Information Collection Fee was estimated at $25–$45. The Fee NPRM explained that if a State provides this service, the fee for this service could be higher or lower than the proposed $25–$45 range. The Fee NPRM explained that the final fee level for information collection and transmission would depend primarily on the volume of applicants that the TSA agent serves.

Part two of the proposed fee range was $36 for the threat assessment (Threat Assessment Fee). In accordance with the mandates of the USA PATRIOT Act and the SEA, the threat assessment consists of TSA reviewing the information collected and determining whether the individual poses a security threat. The Threat Assessment Fee also included costs associated with appeals and waivers.

Part three of the proposed fee range was the FBI fee for conducting a fingerprint-based criminal history records check (FBI Fee). This fee is set by the FBI and is currently at $22, or $24 if a State submits the fingerprints to the FBI.

As noted earlier, other background check programs have different Congressionally-mandated requirements and thus have different costs. For example, the proposed air cargo program would require air cargo handlers to undergo one of the following: A name-based security threat assessment; or, if otherwise required, a fingerprint-based CHRC or another TSA-approved security threat assessment.[28] The hazmat program requires drivers to undergo *both* a fingerprint-based CHRC *and* a name-based security threat assessment, as well as checks of their mental capacity and citizenship or immigration status (emphasis added).[29] These additional checks were required under the USA PATRIOT Act and the SEA. In addition, the proposed air cargo program does not contain waiver provisions, while the hazmat program does. TSA believes that the waiver procedures are an important part of the hazmat program; these procedures recognize that individuals who have committed a disqualifying crime may be rehabilitated to the point that they may be trusted to transport hazmat. The costs associated with adjudicating waiver requests are a large part of the costs of the hazmat program. For these reasons, the costs associated with the hazmat program are significantly higher than the costs associated with the proposed security threat assessments for air cargo handlers.

One commenter suggested that TSA charge separate fees to HME applicants

[25] 49 CFR 1572.5(b)(2)(iii). See also the discussion in the preamble of the May 5 IFR. 68 FR at 23859 (May 5, 2003).

[26] 49 CFR 1572.11(d)(3). See also the discussion in the preamble of the Hazmat Program Rule. 69 FR at 68732 (November 24, 2004).

[27] 69 FR 65258 (November 10, 2004).

[28] See 49 CFR 1544.228(a), 1546.213(a), and 1548.15(a). Under the proposed air cargo program an air cargo handler would have to undergo the name-based threat assessment, and pay the proposed $39 fee, only if he or she was not required to undergo a fingerprint-based CHRC or another security threat assessment approved by TSA. The proposed $39 fee would cover only the cost of the name-based security threat assessment.

[29] See 49 CFR 1572.5(c).

who use the appeal or waiver procedures. Making this change would require creating a new process. TSA is not establishing a separate fee collection process for appeals and waivers at this time. TSA may do so in the future, if experience with the hazmat program suggests that separating these fees would be appropriate.

Another example is the FAST program, which involves efforts by the United States, Canada, and Mexico to improve the efficiency of screening and clearing commercial traffic at the shared borders. The FAST program is a voluntary initiative operated by U.S. Customs and Border Protection (CBP) that provides an expedited customs and immigration process at the borders for approved truck drivers. To be approved for the FAST program, a driver must be admissible to the U.S. and must not have been convicted of a criminal offense or been found in violation of customs or immigration law. The driver must submit fingerprints and other information, such as proof of citizenship and work history. Drivers who are not approved for the FAST program are required to follow normal CBP procedures at the borders.

The $50 fee for the FAST program is an application fee, rather than a threat assessment fee. Drivers must also pay the FAST fee each time any information on the FAST card must be changed, or if the driver loses the card and requires a replacement. In addition, CBP uses appropriated funding to subsidize the costs of conducting the required background checks. As noted above, in section 520 of the 2004 Appropriations Act, Congress directed TSA to fund credentialing and background investigation programs, such as the hazmat program, with user fees.

C. Infrastructure Costs

Labor organization and trucking industry associations objected to the inclusion of infrastructure costs in the fee structure. They noted that the Threat Assessment Fee structure includes the costs of creating and maintaining databases, disaster recovery, and other start-up costs. They argued that these costs should not be passed along to drivers because they are not part of performing the security threat assessment or providing the HME. They suggested that the Federal Government should absorb these costs. Finally, some commenters objected to paying for infrastructure that TSA has stated may be used for other programs.

Section 520 of the 2004 Homeland Security Appropriations Act grants TSA the authority to recover infrastructure and other start-up costs necessary to perform background checks and provide credentialing-related services. Section 520 further directs that fees must be ''reasonably related to the costs of providing services in connection with the activity or item for which the fee is charged.'' [30] Recoverable costs via user fees costs may include both the costs of accessing various law enforcement, governmental and commercial databases, adjudication costs and ''any other costs related to providing the credential or performing the background record check.'' [31] Thus, TSA's user fee may include infrastructure and other start-up costs required to implement TSA's hazmat driver security threat assessment program. TSA has chosen not to include certain general overhead costs that could be applied to calculate the agency's full costs of implementing the program. As previously stated, these costs include costs associated with human resources, financial reporting and accounting, and TSA executive management support.

With respect to the possible future use of the hazmat driver program infrastructure for other programs, if TSA implements other background check programs that leverage the infrastructure that was created for the hazmat program, TSA will re-evaluate its hazmat user fees and adjust them accordingly.

D. Cost Estimates

Several commenters stated that TSA likely underestimated the threat assessment costs because the agency did not include costs associated with appeals and waivers. They also noted that allowing a private entity to collect fingerprints and applicant information on behalf of TSA (TSA agent) or the States (an entity that contracts with a State that chooses to collect fingerprints and applicant information) necessarily implies that the agent will make a profit. They argued that Section 520 of the 2004 Appropriations Act does not permit TSA to include private profit costs as part of the costs recoverable by fees.

TSA notes that the threat assessment costs estimated in the Fee NPRM did include the estimated costs to TSA associated with handling appeals and requests for a waiver. Moreover, in the Regulatory Evaluation for the Hazmat Program Rule, TSA estimated the likely cost to drivers in terms of time for both the HME threat assessment process and the appeal/waiver process for those drivers who receive notification of disqualification. Thus, the threat assessment costs estimated in the Fee NPRM were not understated.

With regard to the legality and appropriateness of including contractor profits as part of TSA's costs for fee recovery, TSA notes that § 15.404–4 of title 48 of the Federal Acquisition Regulation (FAR) specifically allows profit for contractors providing goods and services to the Government, subject to Federal cost accounting standards. As such, contractor cost proposals usually contain a profit component in the rates or a fee, and the Government contracting officer must determine that all the cost elements, including fee, in the proposal are fair and reasonable before awarding a contract. In TSA's contract award process to the TSA agent for the Information Collection Fee, TSA has determined the contractor's charges to be fair and reasonable. Costs are determined to be fair and reasonable by evaluating several factors such as the Government's Independent Cost Estimate (ICE) developed for evaluating this activity, the costs for similar services, including historical costs, and the comparison of costs in various proposals under a competitive procurement award process. Thus, it is appropriate that TSA's costs to provide background check related services under Sec. 520 of the 2004 Homeland Security Appropriations Act (Pub. L. 108–90), include contractor profit/fee as provided under both the FAR and the Transportation Security Administration's Acquisition Management System.

E. Missing Criminal Prosecution Disposition Information

States and State associations commented that States will have to play a role in providing to TSA information regarding the disposition of criminal prosecutions that may be missing from FBI records. They noted that FBI records of State criminal offenders are often incomplete, particularly with regards to disposition information. They stated that as a result, TSA will need to call upon State courts and criminal justice agencies to provide that information, which could impose considerable burdens on States. They argued that TSA should compensate States for providing this information.

The Hazmat Program Rule provides HME applicants an opportunity to submit evidence of the final disposition of a criminal case in those instances where disposition information is missing or unresolved. Thus, the burden of demonstrating that an open offense or warrant is not disqualifying is placed on

[30] Department of Homeland Security Appropriations Act, 2004, section 520, Pub. L. 108–90, October 1, 2003, 117 Stat. 1156 (6 U.S.C. 469) (2004 Appropriations Act).

[31] *Id.*

the HME applicant rather than State authorities. TSA recognizes there may be instances in which an applicant may seek information on an open disposition by turning to State agencies for assistance, and that this may result in costs to State agencies in looking up old records for missing dispositions. Nothing in the Hazmat Program Rule or this final rule prevents States from recovering those costs from HME applicants, if they are authorized to do so under their own State law.

F. Impact of Fees on Drivers and Small Businesses

Several commenters stated that the total amount of the fees would have a substantial negative impact on the availability of drivers qualified to transport hazardous materials. They argued that the trucking industry is already experiencing a shortage of qualified drivers, and that the proposed fees would exacerbate that problem. They also argued that any substantial reduction in the number of qualified drivers will have a detrimental impact on the trucking industry as a whole, and an even more pronounced impact on small businesses (especially small rural businesses) because small businesses are less able to reimburse drivers for the cost of obtaining an HME. They believe that TSA has failed to meet its obligation under the Regulatory Flexibility Act (RFA) to ensure that small businesses are not substantially burdened by Federal regulations.

TSA considered all of the requirements of the RFA in this rulemaking. TSA responds to comments on compliance with the RFA in the Regulatory Flexibility Determination section below and in the separate Regulatory Analysis document provided to the docket. With respect to this specific comment, TSA notes that the expected reduction in HME holders is not likely to have a significant impact on businesses that depend on qualified hazmat drivers. It is anticipated that most of the drivers who will allow their HME to lapse as a result of this final rule rarely transport hazmat. See Section V. ''Hazmat Driver Population'' of the final rule for more discussion of the anticipated reduction in HME holders.

G. Allowing States To Collect Fingerprints and Applicant Information

Industry associations requested that TSA reconsider its decision to allow States to collect fingerprints and applicant information, and to charge a fee for those services. They noted that States, under State fee authority, could charge higher fees for those services than the Information Collection Fee proposed in the Fee NPRM. They argued that there is no security reason to allow for such State participation in a Federal program. They also claimed that a nationwide Federal fingerprint and applicant information collection system would be less expensive than the proposed joint Federal-State collection system because a higher volume of applicants would reduce costs. They suggested that TSA establish only one fee for fingerprint and information collection nationwide.

TSA notes that although the hazmat program is mandated by Federal law, the State is the licensing body for drivers who are State residents, and the State has both authority and a clear interest in licensing standards. Regulation of commercial drivers has traditionally been a combined State-Federal effort. While the Federal Government sets minimum standards, including through Federal Motor Carrier Safety Administration (FMCSA) and TSA rules, States are responsible for most activities in determining that applicants qualify, and for issuing licenses.

TSA considers States to be essential partners in the hazmat program, and some States have infrastructure in place that can help implement the hazmat program and a desire to do so. Because States want to perform this function, and to preserve strong State-Federal relationships in this area, TSA will not prevent States from choosing to collect fingerprints and applicant information in accordance with the Hazmat Program Rule.

H. Performance Standards for TSA Agents

Industry associations commented that an HME applicant's costs of providing information and fingerprints to a TSA agent could vary depending on the proximity of the agent to the applicants, the agent's hours of operation, and the tolerance allowed for agent error. They argued that this could cause delays in the HME application approval process, which would negatively impact the trucking industry as well as industries that rely on the trucking industry to supply their customers. They suggested that TSA establish performance standards for TSA agents collecting fingerprints and applicant information.

TSA is mindful of the need to ensure adequate performance standards and oversight in selecting appropriate locations to provide, to the extent possible, a consistent application of service in rural and urban areas. In order to establish the number and type of sites, TSA will take into consideration the overall population, density of the HME applicant population, geographic dispersion throughout the State, and the urban-rural mix in the State. TSA has developed performance standards for the TSA agent that will collect fingerprints and applicant information in those States that opt for a TSA agent to provide those services, and those performance standards are incorporated into the contract between TSA and the agent. TSA will monitor the program throughout the duration of the contract and determine the need for additional or varied collection sites should the need for service improvement be identified.

I. Hazmat Program Rule

Many of the comments to the Fee NPRM discussed aspects of the Hazmat Program Rule. For example, trucking industry associations encouraged TSA to ensure that hazmat drivers not be required to undergo multiple threat assessments for different programs, such as the Transportation Worker Identification Credential (TWIC). Labor organizations commented that TSA should require Mexican and Canadian drivers to undergo the same security threat assessments as U.S. drivers. State associations recommended that the security threat assessment include a check of State criminal history records.

Although these comments are directed at aspects of the Hazmat Program Rule, TSA is providing preliminary responses in this final rule. TSA may reexamine these issues when promulgating the final Hazmat Program Rule.

With respect to the concern that hazmat drivers may be subjected to multiple threat assessments, TSA recognizes that there may be overlapping security threat assessment and identification verification requirements for certain transportation workers and is making every effort to minimize duplication. TSA noted this in the preamble of the Hazmat Program Rule, particularly concerning drivers who transport hazardous material for the defense and nuclear industries. TSA invited comment on the issue in the Hazmat Program Rule, and stated that the agency plans to implement an acceptance process for comparable threat assessments that are completed by other agencies or for other purposes. TSA notes that the TWIC program is intended to implement the threat assessment process for workers in all modes of transportation who need unescorted access to secure areas of transportation facilities. TSA plans that once a driver has successfully completed the TSA security threat assessment for an HME, and holds a

current HME, the driver will not be required to undergo a new security threat assessment if TSA requires drivers to obtain a TWIC. TSA will, as appropriate, coordinate with other programs that may affect hazmat drivers to minimize the duplication of threat assessments.

With respect to the suggestion that TSA require foreign drivers to undergo the same security threat assessments as U.S. drivers, TSA regulations at 49 CFR 1572.201 require Canadian drivers who transport explosives from Canada to the U.S. to submit certain information to Transport Canada, which conducts a background check and determines whether the drivers are properly licensed. Drivers who are not listed by Transport Canada as completing these steps are not authorized to enter the U.S. with explosives shipments. Also, TSA checks these names against certain watch lists to determine whether they may pose a threat to security.

TSA will address threat assessments for hazmat drivers from Canada and Mexico in the future. Consultations are ongoing between U.S. and Canadian officials, and DHS intends to begin discussions on this issue with the appropriate agencies in Mexico.

With respect to the suggestion that the TSA threat assessment include a check of State criminal history records, TSA notes that it would be difficult and costly for TSA to conduct an effective search of State criminal history records. Commercial drivers often travel from State to State, making it difficult for TSA to know which State criminal history records to search. TSA also notes that searching State records would add significantly to the cost of the program, which would necessitate an increase in the Threat Assessment Fee. However, TSA notes that the Hazmat Program Rule does not prevent a State from searching its own criminal history records. If a State checks its criminal history records and forward any pertinent information to TSA during an applicant's security threat assessment, TSA will use the information. TSA encourages States to provide such information.

J. Relationship to the TWIC Program

Industry associations and labor organizations suggested that TSA conduct only name-based security threat assessments without fingerprint-based CHRCs, or defer CHRCs until the TWIC requirements are implemented.

TSA considered conducting only name-based threat assessments. However, the USA PATRIOT Act mandates that TSA conduct a check of relevant criminal history databases, and TSA believes that a CHRC adds value to a security threat assessment. Thus, TSA believes that it is important to conduct CHRCs as part of the hazmat program security threat assessment.

TSA must require drivers to submit their fingerprints, because, as noted above, the Compact generally requires fingerprints for the purpose of gaining access to criminal history databases for non-criminal justice purposes. However, as the security programs administered by TSA mature, TSA intends to leverage resources and take other steps in an effort to ease the costs and burdens of the programs while maintaining a high level of security.

Commenters were concerned that the TWIC requirements would be duplicative, that is, that drivers who were approved under the hazmat program would need to undergo another threat assessment under the TWIC program. TSA has determined that drivers who are approved under the hazmat program will not have to submit to another threat assessment under the TWIC program. TSA is also considering other alternatives to reduce the time and/or cost of the hazmat threat assessment.

III. Summary of the Final Rule

To comply with the mandates of Section 520 of the 2004 Appropriations Act, as well as the mandates of the USA PATRIOT Act and the SEA, in this final rule (final rule or Hazmat Fee Rule) TSA is establishing user fees for individuals who apply for or renew an HME, and thus are required to undergo a security threat assessment in accordance with 49 CFR part 1572. TSA is establishing the following two new user fees, in addition to the FBI Fee [32] for performing the CHRC on behalf of government agencies for non-governmental applicants: (1) A fee to cover TSA's costs of performing and adjudicating security threat assessments, appeals, and waivers (Threat Assessment Fee); and (2) a fee to cover the costs of collecting and transmitting fingerprints and applicant information (Information Collection Fee).

Under the final rule, a State that opts to collect fingerprints and applicant information itself in accordance with the Hazmat Program Rule is required to: (1) Collect and remit to TSA the Threat Assessment Fee in accordance with the requirements of the final rule; and (2) collect and remit to the FBI its user fee (FBI Fee) to perform a CHRC in accordance with established FBI procedures. Nothing in the final rule prohibits the State, under its own fee authority, from collecting a fee determined by the State to cover its costs of collecting and transmitting fingerprints and applicant information. TSA notes that a State may not collect a fee for its own costs under TSA's fee authority.

A State that opts to permit a TSA agent to collect and transmit fingerprints and applicant information is not required to collect and remit to TSA *any fees* under this final rule (emphasis added). Rather, a TSA agent will: (1) Collect and remit to TSA the Threat Assessment Fee; (2) collect and keep the Information Collection Fee; and (3) collect and remit to TSA the FBI Fee for forwarding to the FBI. After discussions with the FBI, TSA decided to add a requirement that the TSA agent remit the FBI fee to TSA for forwarding to the FBI, as the FBI intends to bill TSA for the CHRCs the FBI will perform for TSA.

The fees are as follows: Information Collection Fee $38 (in States where a TSA agent collects fingerprints and applicant information), Threat Assessment Fee $34, and FBI Fee $22 (if TSA agent collects) or $24 (if State collects).

Pursuant to the Chief Financial Officers Act of 1990, DHS/TSA is required to review these fees no less than every two years.[33] Upon review, if it is found that the fees are either too high (that is, total fees exceed the total cost to provide the services) or too low (that is, total fees do not cover the total costs to provide the services), TSA may propose changes to the fees. In addition, as DHS and TSA identify and implement additional efficiencies across numerous threat assessment and credentialing programs, any resulting cost savings will be incorporated into the fee levels accordingly.

In this final rule, TSA is making the following changes to the Fee NPRM:

- TSA is placing the fee procedures and requirements in 49 CFR part 1572, rather than 49 CFR part 1522. TSA initially intended to have a separate part for fee rules, but has since determined that placing fee rules in the same part as the rules governing the programs that the fees support is easier for stakeholders to locate. Thus, TSA decided to place the Hazmat Fee Rule in the same part as the Hazmat Program Rule.

[32] The FBI is authorized to establish and collect fees to process fingerprint identification records and name checks for non-criminal justice, non-law enforcement employment and licensing purposes that may be used for salaries and other expenses incurred in providing these services. See title II of Pub. L. 101–515, November 5, 1990, 104 Stat. 2112, codified in a note to 28 U.S.C. 534.

[33] 31 U.S.C. 3512.

• As noted above in the response to comments, TSA is specifying in the final rule that the driver or the driver's employer is responsible for paying the required fees.

• TSA is changing the name of the main infrastructure support system from the Hazardous Materials Endorsement Screening Gateway (HMESG) to the Screening Gateway. The Screening Gateway is the information system platform that will allow TSA to submit, receive, and integrate security threat assessment information from a variety of Federal, State, and other sources in order to help make security threat assessment determinations. The new name better reflects the mission of this information system platform, which TSA expects may include security threat assessment processing for a variety of threat assessment and credentialing programs in the future, including TWIC, Air Cargo, and Registered Traveler.

• TSA is reducing the estimated number of applicants expected to be processed in the first year by 70,000 to compensate for the effect the of program's phased-in approach. As a result of a population reduction, and without any other changes to the costs, the fee generally would have increased because the costs would have been shared among a smaller population. However, TSA has reduced other expected program costs, and thus various components of the fee, and as a result is able to reduce the total Threat Assessment fee from $36 to $34 (despite the decrease in estimated population).

• TSA is removing the costs associated with the use of commercial data sources for terrorist threat analysis. At present, TSA has decided not to employ commercial data sources in the terrorist threat analysis because TSA has not yet concluded that these data sources would significantly augment the threat analysis process. If TSA's experience with the hazmat program indicates that the use of commercial data sources would enhance the security threat assessment, TSA will review the cost implications of adding such data sources. In the Fee NPRM, TSA estimated the cost of using commercial data sources to be $1.7 million per year (depending on annual applicant volume) for a five-year program lifecycle cost total of $8.6 million.

• TSA is adding $1.35 million in start-up costs and approximately $3 million in costs for years 1 through 5 for system and infrastructure costs and system programming costs. These increased costs include programming modifications to the Screening Gateway that add significant enhancements in adjudication, appeal, and waiver processing, reduce processing time, and increase flexibility in the workflow. Thus, the total five-year lifecycle program costs for the information systems cost component category has risen from total five-year cost estimates of $10.8 million to $15.1 million (*see* Figure 2 for a complete listing of cost estimates). Some of these cost adjustments include the following:

—$400,000 was invested to provide the Screening Gateway the capability to ''translate'' or read certain State criminal history records. Additionally, $75,000 in recurring costs will be required to maintain and support this capability. This will allow the Screening Gateway to more efficiently interpret the results of certain criminal history records and complete a cursory automated screening of information on the applicant. This is a cost-effective solution to translating criminal history records into a format that can be more expeditiously read and processed by the Screening Gateway.

—$5.9 million was added over the five-year program lifecycle for applicant help desk support services. This will ensure that drivers applying for the TSA threat assessment will be able to check the status of their application, as well as provide information and support during the waiver and/or appeals process.

—Other information system cost estimates have decreased since the Fee NPRM was published. For example, cost estimates have decreased from $3.1 million to $1.6 million over five years for the disaster recovery system. TSA has identified existing resources since publishing the Fee NPRM and intends to leverage this advantage to reduce the costs of the disaster recovery system.

• TSA is increasing office-related costs by $3.9 million over the five-year program. Costs were driven up primarily by a $3.2 million increase for off-site mail and digitized processing after receiving updated cost estimates, adjusting for a significant increase in anticipated appeals, and a new requirement to notify drivers of a Determination of No Security Threat. In the Fee NPRM, TSA proposed to notify drivers only of negative adjudication results (*i.e.*, determination of threat warranting disqualification). However, in response to States' comments, TSA has decided to notify drivers of all threat determinations (*see* Figure 2 for a complete listing of cost estimates).

• TSA is decreasing Federal and contractor labor costs by $6.2 million over the five-year program lifecycle after receiving more current cost estimates for manpower and off-site processing, additional notifications, and related threat assessment applicant support services. Increases in adjudication costs for increased labor costs of contract and Federal adjudicators and Federal legal support were offset by decreases in Federal and contracting program support (please see Figure 2 for a complete listing of cost estimates). Some of these cost adjustments include the following:

—TSA is adding $750,000 in costs to pay for interim data entry and communication of adjudication results for those States that did not choose the TSA Agent for the period of February 2005 through July 2005. To allow sufficient time for States to implement system upgrades, TSA will provide these temporary alternative methods for data transfer to help ensure the volume of applicants can be processed quickly and efficiently.

—TSA is also removing the costs for an Interpol connection and an Interpol Liaison Officer. TSA intends to use Interpol information when appropriate, but at present, TSA has decided to not seek a direct connection to Interpol. If TSA's experience with the hazmat program indicates that a direct Interpol connection with liaison support would enhance the security threat assessment, TSA will review the cost implications of adding such services.

In sum, TSA has reduced the total estimated five-year program lifecycle costs from $72.42 million to $65.76 million, a decrease of $6.66 million. As a result, based on the total estimated costs divided by the total estimated five-year population of HME new applicants, renewals, and transfers, TSA has reduced the Threat Assessment Fee from $36 to $34 ($65.76 million divided by 1,952,000 = $34).

IV. Hazmat Driver Population

TSA estimates that there are currently 2.7 million HME holders throughout the United States. This estimate is based on the results of the initial name-based terrorist threat assessment recently performed by TSA on the entire current population of HME holders.[34] Each State and the District of Columbia submitted to TSA the names of all current (not expired) holders of HMEs.

[34] In July 2004, TSA used HME applicant names and biographical data to conduct threat assessments on all current HME holders. The threat assessment included entering names and biographical data in the National Crime Information Center (NCIC) database and other databases, such as terrorism watch lists. TSA noted its intent to conduct these threat assessments in the May 5 IFR.

This estimate was based on an actual head count, rather than a statistical sampling or other estimate. However, the DOT's Bureau of Transportation Statistics (BTS) and the U.S. Department of Commerce's U.S. Census Bureau have historically estimated the number of drivers carrying hazardous materials (those drivers either carrying primarily hazardous materials or carrying such on a regular basis) to be in the range of 500,000–800,000.[35] TSA believes this disparity between the total current number of HME holders and estimated ''active'' or ''dedicated'' drivers of hazardous materials suggests that a significant portion of the HME holder population rarely, if ever, transports hazardous materials.

Due to the additional cost, effort, and the prospect of disqualification for certain felony offenses resulting from this security threat assessment, TSA expects that a certain number of current HME holders who do not regularly transport hazardous materials will choose not to renew their HME over the course of the five-year renewal period. TSA bases this assumption on recent discussions with various trucking industry representatives that will be affected by TSA's security threat assessment requirement, including trucking associations, union leaders, and individual trucking companies.[36] Industry representatives that TSA contacted predict at least some decrease in the HME population as a result of TSA's security threat assessment regulation. The same industry representatives further concur that current CDL driver shortages across the commercial trucking industry, coupled with the fact that drivers are not typically paid any wage premium specifically for carrying hazardous materials, further support TSA's prediction that there will be some reduction of total HME holders due to TSA's security threat assessment process.

Empirical data suggest that there has been a decline in total HME holders since early 2003. A recent TSA survey of certain State motor vehicle administrators, representing approximately 20 percent of the 2.7 million total HME records from the States, revealed a one-year weighted average decline of 17 percent from early 2003 to early 2004.[37] TSA believes this decline is due, at least in part, to the prospect of TSA's security threat assessment regulation (announced publicly in the May 5 IFR). With the imposition of the new fees requirement, TSA estimates that there will be a further 20 percent decline in the HME holder population resulting from the first year of operations after the Hazmat Program Rule takes effect on January 31, 2005. This is the date when new HME applicants will be required to submit fingerprints, biographical information, and fees. Applicants seeking to renew expiring HMEs will be subject to the fingerprint, biographical information, and fee submission requirements beginning May 31, 2005.

TSA expects to receive a prorated total of 360,000 new and renewal applications in the first year after January 31, 2005.[38] In the second and third years, TSA estimates a 5 percent annual HME population decline each year, for a total of approximately 410,000 and 390,000 total new and renewal applicants, respectively. After the third year, TSA estimates that the regulatory-induced adjustment on the HME holder population will have been fully realized. Thus, in the fourth and fifth years, TSA estimates a modest annual growth in renewals and new applications, in line with that of overall estimated domestic non-farm employment growth, at 1 percent annually. Thus, TSA expects approximately 394,000 and 398,000 total new applicants and renewals, respectively, in the fourth and fifth years. The total five-year new and renewal applicants for whom TSA expects to perform security threat assessments will thus be approximately 1.952 million.

[35] ''Transportation Statistics Annual Reports, 2001'', p. 120; ''Transportation Statistics Annual Reports, 2003'', p. 106; ''Commodity Flow Survey: Hazardous Materials'', U.S. Department of Transportation, Bureau of Transportation Statistics, U.S. Census Bureau, Economic Census, 1997, p. 9; ''Vehicle Inventory and Use Survey'', U.S. Department of Commerce, U.S. Census Bureau, 1997. In reaching this estimate, TSA extrapolated 1997–2003 data and applied it to current hazardous materials volume, driver, and truck estimates.

[36] To estimate the volume of HME holders expected to submit to the TSA security threat assessment processes, TSA conducted phone interviews during the months of June and July 2004 with representatives from the following organizations: American Trucking Association; Estes Express Lines; International Brotherhood of Teamsters; Motor Freight Carriers' Associations; National Private Truck Council; National Tank Truck Carriers, Inc.; and the Truckload Carriers Association.

[37] This sample survey decline in total HME holders from 2003 to 2004 is also supported by the decrease in total HME records in the Federal Motor Carrier Safety Administration's (FMCSA) Commercial Drivers License Information System (CDLIS) database. In early 2003, FMCSA reported to TSA that the CDLIS contained approximately 3.5 million total HME holders. TSA published this earlier estimate of 3.5 million total HME holders in the May 5 IFR. In May 2004, FMCSA reported approximately 2.7 million HME holders in the CDLIS.

[38] Due to the Hazmat Program Rule's May 31, 2005, compliance date for renewals and transfers, 360,000 is the prorated portion of TSA's annual estimation of 432,000 applicants in the first program year. The 432,000-applicant estimate is calculated by reducing 2.7 million HMEs by 20 percent, for a total of 2,160,000, and then dividing by 5 to calculate an even distribution of TSA's five-year renewal cycle requirement. HME estimates for subsequent recurring years are calculated accordingly.

Figure 1: TSA's Five-Year Estimates for HAZMAT Endorsement Holder Population, Growth and Total New Applicants and Renewals

Year	HME Holder Base Population	Annual Percentage Growth	Total New Applicants & Renewals
	2,700,000	NA	NA
1	2,160,000	-20%	360,000*
2	2,052,000	-5%	410,000
3	1,949,000	-5%	390,000
4	1,969,000	1%	394,000
5	1,989,000	1%	398,000
Totals	**NA**	**NA**	**1,952,000**

* Prorated figure for estimated 432,000 annualized total applicants and renewals, based on May 31, 2005, compliance date for renewal applicants, as detailed in the Hazmat Program Rule.

V. Fee Program Overview

The fee program for the security threat assessment consists of three parts, discussed below: (A) The Information Collection Fee for the collection and transmission of fingerprints and applicant information; (B) the Threat Assessment Fee for the security threat assessment and associated notification, adjudication, appeal, and waiver processes; and (C) the FBI Fee for checking applicants' fingerprints against the FBI's CHRC database to identify past criminal offenses as reported to FBI. Each of these fees is structured to recover the Federal Government's cost of performing these functions.

TSA notes that some States have opted to collect and transmit fingerprints and applicant information, and charge a user fee for those services under their own user fee authority. In those States, HME applicants will be required under the final rule to remit to the State, for transmission to the Federal Government, only the Threat Assessment Fee and FBI Fee. Nothing in this final rule prohibits the State from collecting a fee determined by the State under the State's own fee authority to cover its costs of collecting and transmitting fingerprints and applicant information. TSA notes that a State may not collect a fee pursuant to TSA's fee authority to reimburse the State's own costs.

A discussion of the three fees follows.

A. Information Collection Fee

As set forth in the Hazmat Program Rule, the security threat assessment process requires all drivers who apply for or renew an HME to submit fingerprints and other biographical information. The Hazmat Program Rule required States to choose one of the following two options for collection and transmission of fingerprints and applicant information:

(1) Collect and transmit fingerprints and applicant information itself, either through a State agency, such as the State DMV or State law enforcement agencies, or by contracting with a third party; or

(2) Allow a TSA agent to collect and transmit fingerprints and applicant information.

1. Cost of Information Collection

As noted above, in those States that have chosen to allow a TSA agent to collect and transmit fingerprints and applicant information, TSA will hire a contractor agent to provide those services. Based on TSA's research of both commercial and Government fingerprint and information collection services, as well as a competitive bidding and acquisition process, TSA has concluded that the per applicant cost to collect and transmit fingerprints and other required applicant data electronically is $38. This also includes the costs for required administrative support, quality control, and chain of custody assurance.

2. Information Collection Fee

Based on the above costs, TSA concludes that the per applicant fee for information collection and transmission will be $38. This fee will only apply to those HME applicants in States that have chosen to have a TSA agent perform information collection and transmission, as well as related administrative support. States that choose to perform the information collection and transmission functions themselves, and charge a fee to recover the costs of performing these services, are responsible for establishing their own State fee, in accordance with their State user fee authority and requirements. TSA's Information Collection Fee may not be the same as the fees States may establish for performing these services. The Information Collection Fee will not include the fee charged by FBI to process fingerprint identification records.

B. Threat Assessment Fee

For the TSA security threat assessment process, each applicant's information will be checked against multiple databases and other information sources so TSA can determine whether the applicant poses a security threat that warrants denial of the HME. This check searches for potential security threats, immigration status, past criminal activity and mental incompetence. TSA will perform all of the threat assessment functions. The threat assessment includes an appeal process for individuals who believe the records on which TSA bases its determination are incorrect. In addition, TSA will administer a waiver process for applicants who seek a waiver of disqualification. Individuals whom TSA has determined pose a security threat based on reviews of pertinent databases, or who are not in the U.S. lawfully, are not eligible for a waiver.[39]

1. Start-Up Costs

TSA's effort to conduct security threat assessments on drivers with an HME will require ''start-up'' costs and annual ''recurring'' costs for checks conducted in years after January 31, 2005. The

[39] These threat assessment standards are contained at 49 CFR part 1572.

start-up costs will consist of all the costs associated with start-up activities necessary to implement the program. The start-up costs include the systems, personnel, and resources TSA will be required to bring on-line to conduct security threat assessments on applicants renewing or newly applying for a CDL with an HME.

Regardless of whether a State or a TSA agent collects and transmits fingerprints and applicant information, TSA must implement and maintain the appropriate systems, resources, and personnel to ensure that fingerprints and applicant information are ''linked,'' and that TSA can receive and act on the results of the security threat assessment. TSA will be required to have the necessary resources to perform the security threat assessments and process appeals, requests for waivers, and notification (to the driver and the appropriate State) of all results. In addition, TSA must be capable of archiving the results of these actions for the purpose of drivers newly applying or renewing their HME application in future years (in the case of drivers who successfully appealed a TSA background check or were granted a waiver).

TSA estimates that the total start-up cost for the hazmat program will be $4.44 million. This estimate includes: (i) $4.02 million for all information systems costs, including the development and deployment of TSA's Screening Gateway—an information system platform that will allow TSA to submit, receive, and integrate security threat assessment information from a variety of Federal, State, and other sources in order to help make security threat assessment determinations—as well as related network and communication support costs, including access to information systems from AAMVA, an adjudication helpdesk system, and support capability to keep applicants informed on the status of their threat assessments; (ii) $360,000 for contract personnel to perform various program management functions in support of program operations; and (iii) $60,000 for office costs, including program travel. TSA notes that certain start-up overhead costs that directly support the program, such as those for human resources, most financial systems, accounting and budgeting support costs and TSA executive management time, have not been included in the user fees. See Figure 2 below for additional details.

2. Recurring Costs

This section summarizes TSA's estimated costs of completing security threat assessments on individuals who apply for or renew an HME for each year after January 31, 2005. Recurring costs represent the resources necessary for TSA to perform ongoing security threat assessments on drivers applying for or renewing an HME as well as to maintain program infrastructure (*e.g.*, technical systems). As previously stated, TSA estimates that the population of drivers who apply for or renew an HME will be 360,000 drivers for the prorated first year (due to the phased in approach whereby HME renewal and transfer applicants must comply with TSA's program requirements beginning May 31, 2005). Pursuant to the Hazmat Program Rule, State Departments of Motor Vehicles (DMVs) will be prohibited from issuing or renewing an HME until TSA has notified the State that the driver (based on a security threat assessment) does not pose a security threat.

TSA estimates that the total annual recurring costs for performing threat assessments will be $14.35 million for the first year (*i.e.*, from January 31, 2005 to January 30, 2006) and between $11.62 million and $11.86 million per year for the second through fifth years.[40] Recurring costs will include the costs of: continued development and lifecycle maintenance of information systems; disaster recovery infrastructure, digitization of applicant biographical data; the use of databases containing citizenship, international criminal history, and other data necessary to perform a security threat assessment; Federal and contractor personnel to perform all program office functions, including support of State's activities in the program along with compliance assurance; Federal and contractor support to perform security threat assessments, and to administer and document adjudications, appeals, and waivers;[41] and office costs, including office space, notification mailing costs, and required program travel. See Figure 2 for additional cost details.

3. Threat Assessment Total Costs

Based on its population and cost estimates assumptions, TSA concludes that the total of start-up and the first five years' recurring costs will be $65.76 million. Recurring costs are not adjusted for inflation. All figures are rounded to the nearest thousand.

BILLING CODE 4910–62–P

[40] All cost and fee estimates in recurring years are not adjusted for inflation.

[41] As the Hazmat Program matures, and TSA gains experience with the appeals and waiver processes, the agency may need to adjust these processes. If TSA adjusts the appeals or waiver process, the agency's costs may increase or decrease, which would necessitate an adjustment in the Threat Assessment Fee.

Figure 2: TSA Security Threat Assessment Start-Up and Recurring Cost Estimates
All figures in thousands (000)

	Start-Up	1st Year	2nd Year	3rd Year	4th Year	5th Year	Total
Estimated Annual New Applicants & Renewals	**NA**	**360**	**410**	**390**	**394**	**398**	**1,952**
COST COMPONENTS							
Personnel-Federal & Contractor							
Personnel for threat assessments, notifications, waivers & appeals	NA	$6,640	$4,522	$4,409	$4,409	$4,522	**$24,502**
Personnel for program office	$360	$2,361	$2,001	$2,001	$2,001	$2,001	**$10,725**
Personnel for compliance teams	NA	$518	$518	$518	$518	$518	**$2,590**
Fee processing & analysis	NA	$132	$132	$132	$132	$132	**$660**
IT support	NA	$132	$132	$132	$132	$132	**$660**
Personnel - Federal & Contractor Subtotal	**$360**	**$9,783**	**$7,305**	**$7,192**	**$7,192**	**$7,305**	**$39,137**
Information Systems							
Screening Gateway Development	$3,845						**$3,845**
Screening Gateway operations, maintenance & connectivity	$50	$625	$625	$625	$625	$625	**$3,175**
Disaster recovery site		$600	$250	$250	$250	$250	**$1,600**
Adjudication helpdesk system & support		$1,080	$1,231	$1,170	$1,181	$1,193	**$5,855**
Law Enforcement Mgmt. System (LEMS) access & support	$113	$50	$50	$50	$50	$50	**$363**
AAMVA system access, connectivity & maintenance	$12	$50	$50	$50	$50	$50	**$262**
Information Systems Subtotal	**$4,020**	**$2,405**	**$2,206**	**$2,145**	**$2,156**	**$2,168**	**$15,100**
Terrorist & Intel Analyses							
Intelligence analysis services	NA	$328	$373	$355	$358	$362	**$1,776**
Terrorist & Intel Analyses Subtotal	**NA**	**$328**	**$373**	**$355**	**$358**	**$362**	**$1,776**
Office							
Communications (applicant data digitization & mailings)	NA	$1,210	$1,358	$1,311	$1,324	$1,366	**$6,569**
Office facilities (space)		$439	$439	$439	$439	$439	**$2,195**
Travel	$60	$184	$184	$184	$184	$184	**$980**
Office Subtotal	**$60**	**$1,833**	**$1,981**	**$1,934**	**$1,947**	**$1,989**	**$9,744**
GRAND TOTALS	**$4,440**	**$14,349**	**$11,865**	**$11,626**	**$11,653**	**$11,824**	**$65,757**

BILLING CODE 4910–62–C

4. Threat Assessment Fee Calculation

TSA will charge a fee to recover most of its security threat assessment start-up costs as well as all recurring costs. The start-up costs include non-recurring costs required to perform the security threat assessments that include fingerprint submission. Because these costs cannot be recovered prior to the full implementation of the Hazmat Program, and because all HME recipients benefit from the services provided as a result of the infrastructure and capabilities that TSA must develop to implement the Hazmat Program, TSA proposes to amortize the start-up costs over a five-year period to recover these one-time costs equitably.

This amortization period coincides with the requirement in the FMCSA companion rule [42] to the May 5 IFR [43] that States mandate a five-year maximum renewal period for the HMEs. Thus, a five-year amortization period means the start-up costs will be borne by all individuals who either currently hold an HME or who apply for an HME in that five-year period. TSA notes that the amortization is done by totaling all start-up costs and the five-year annual recurring costs and dividing by 1.952 million requests for a new or renewed HME—the total number expected in the first five years. (See Figure 1).

Based on the estimated costs in Figure 2, TSA has calculated the per applicant Threat Assessment Fee as follows: TSA's estimated start-up costs of $4.44 million, added to the estimated sum of the first five years' annual recurring costs of $61.32 million, equal a total of $65.76 million. These total costs are then divided by the 1.952 million total estimated number of applicants for a new or renewed HME over the first five years after January 31, 2005. This calculation results in an estimated cost to each applicant of $33.69, which is rounded up to $34 per applicant.

As noted above, States that have chosen to collect and transmit fingerprints and applicant information under the Hazmat Program Rule are still required to collect the Threat Assessment Fee on behalf of TSA and remit it to TSA in accordance with the final rule. In States that have chosen to allow a TSA agent to collect and transmit fingerprints and applicant information under the Hazmat Program Rule, the TSA agent is required to collect this fee on behalf of TSA and remit it to TSA in accordance with the final rule.

[42] 68 FR 23843 (May 5, 2003).

[43] 68 FR 23852 (May 5, 2003).

C. FBI Fee

As part of the security threat assessment, TSA will use FBI's CHRC process. The FBI is authorized to establish and collect fees to process fingerprint identification records and name checks for non-criminal justice, non-law enforcement employment and licensing purposes that may be used for salaries and other expenses incurred in providing these services.[44] Pursuant to Criminal Justice Information Services (CJIS) Information Letter 93–3 (October 8, 1993), this fee is currently set at $24. CJIS Information Letter 93–3 provides that ''State Identification Bureaus and other agencies that channel user-fee fingerprint cards to the FBI and account for the fees on a monthly basis will continue to retain $2 of the payment to help offset handling costs.'' Thus, in those States that have opted to allow a TSA agent to collect and transmit fingerprints and applicant information, the FBI fingerprint processing charge (FBI Fee) will be $22. States that have chosen to collect and transmit fingerprints and applicant information on their own may charge $24 (the $22 FBI Fee plus the $2 handling costs), as long as it is consistent with CJIS Information Letter 93–3. The fingerprint processing user fee is set by the FBI, and the amount is subject to change.

VI. Total Fees

In this final rule, TSA establishes the following fees for HME applicants who submit fingerprints and applicant information to a TSA agent:

(1) Information Collection and Transmission Fee: $38.

(2) Threat Assessment Fee: $34.

(3) FBI Fee: $22.

Thus, the total fees for such applicants are $94.

Under the final rule, in States that have opted to collect and transmit fingerprints and applicant information on their own, HME applicants will be required to pay the $34 Threat Assessment Fee and an FBI Fee of $22 or $24, depending on the amount charged by the State. TSA assumes that such applicants also will be required under State user fee authority to pay to the State a fee to cover the State's costs of collecting and transmitting fingerprints and applicant information. That fee may vary from State to State. Thus, TSA cannot estimate the total fees for such applicants.

[44] See Title II of Pub. L. 101–515, November 5, 1990, 104 Stat. 2112, codified in a note to 28 U.S.C. 534.

VII. Section by Section Analysis

TSA did not receive any substantive public comments on the fee collection procedures proposed in the Fee NPRM, and so has made very few revisions to those procedures in the final rule.

Section 1572.301 establishes the applicability of this part and definitions of terms used in this part. This part applies to States that issue an HME, individuals who apply for a new or renewed HME, and entities that collect fees from such individuals on behalf of TSA.

The terms ''commercial driver's license,'' ''endorsement,'' and ''hazardous materials'' are used as defined in FMCSA regulations.

The term ''day'' is defined as a calendar day.

The term ''FBI Fee'' is defined as the fee required for the cost of the FBI to process fingerprint identification records and name checks.

The term ''hazardous materials endorsement'' is defined as the authorization for an individual to transport hazardous materials in commerce, which must be issued on the individual's commercial driver's license.

The term ''Information Collection Fee'' is defined as the fee required for the cost of collecting and transmitting fingerprints and other applicant information under 49 CFR part 1572.

The term ''State'' is defined as a U.S. State or the District of Columbia.

The term ''Threat Assessment Fee'' is defined as the fee required for the cost of TSA adjudicating security threat assessments, appeals, and waivers under 49 CFR part 1572.

The term ''TSA agent'' is defined as an entity approved by TSA to collect fingerprints in accordance with 49 CFR part 1572 and fees in accordance with this subpart.

Sections 1572.303 through 1572.399 are reserved.

Section 1572.401 requires a State that collects fingerprints and applicant information under 49 CFR part 1572 to collect, handle, and remit to TSA the Threat Assessment Fee in accordance with the procedures in § 1572.403. The State also is required to collect and remit to the FBI the FBI Fee in accordance with established FBI procedures. After discussions with the FBI, TSA added this requirement to the final rule because the FBI intends to bill States for CHRCs it will perform in accordance with procedures already established by FBI and the States.

Section 1572.401 also requires a TSA agent that collects fingerprints and applicant information under 49 CFR

part 1572 to collect the Information Collection Fee, Threat Assessment Fee, and FBI Fee in accordance with procedures approved by TSA. A TSA agent also is required to remit to TSA the Threat Assessment Fee and the FBI Fee in accordance with procedures approved by TSA.

Section 1572.403 describes the procedures a State is required to follow if the State chooses to collect and transmit fingerprints under the Hazmat Program Rule. Section 1572.403 pertains only to the collection of the Threat Assessment Fee to cover TSA's costs and the FBI Fee to cover the costs of the CHRC.[45] Nothing in this regulation prohibits a State from collecting additional fees, under its own user fee authority, to cover its costs of collecting and transmitting fingerprints and applicant information at the time the State collects the TSA Threat Assessment Fee and the FBI Fee from HME applicants.

Paragraph 1572.403(a) requires States to impose the Threat Assessment Fee and the FBI Fee when an individual submits an application to the State for a new or renewed HME in compliance with 49 CFR part 1572. It also establishes the TSA Threat Assessment Fee at $34. Finally, it requires the individual applying for the HME, or that individual's employer, to remit the Threat Assessment Fee and the FBI Fee to the State in which the individual is applying for the HME, in a form and manner approved by TSA and the State.

Paragraph 1572.403(b) requires each State to collect the Threat Assessment Fee and the FBI Fee from an individual at the time the individual submits an application for a new or renewed HME. TSA expects that as States become fully operational for purposes of this part, TSA will be receiving names frequently and far in advance of the States remitting the Threat Assessment Fee. Therefore, it is vital that the States collect the Threat Assessment Fee under this part from the applicant as the application is submitted. In addition, paragraph 1572.403(d)(8) provides that TSA does not envision issuing any refunds. Once the application is received by TSA, analysis of the application will commence immediately. Therefore, TSA incurs the costs of performing the analysis immediately. Paragraph 1572.403(b)(2) clarifies that once TSA receives an application from a State for a security threat assessment in accordance with 49 CFR part 1572, the State is liable for the Threat Assessment Fee.

[45] As noted above, the FBI currently allows States to charge $24 for the FBI CHRC.

Paragraph 1572.403(c) establishes requirements for the handling of Threat Assessment Fees collected by the States prior to remittance to TSA. Because the States are collecting the Threat Assessment Fees on behalf of TSA, the fees are considered to be held in trust for the beneficial interest of the United States. Thus, States are required to safeguard all Threat Assessment Fees collected until they are remitted to TSA. In addition, States are required to account for Threat Assessment Fees separately. However, States are permitted to commingle such fees with other sources of revenue.

Paragraph 1572.403(d) establishes procedures for the remittance of Threat Assessment Fees to TSA. States are required to remit all Threat Assessment Fees collected under this part to TSA on a monthly basis. Every month, TSA will issue an invoice to each State based on the number of HME applications the State has sent to TSA. For example, if a State sends TSA 100 HME applications during the month of February, TSA will bill the State $3400 ($100 \times \$34$). The State is required to pay the invoice in full within 30 days of the date that TSA sends the invoice to the State.

The payments must be remitted to TSA by check, money order, wire, or any other payment method acceptable to TSA in the future. Payments must be made in U.S. currency and made payable to the ''Transportation Security Administration.'' States are allowed to retain any interest that accrues on the principal amounts of the Threat Assessment Fees between the date of collection and the date the fees are remitted to TSA, which shall not be more than 30 days after the date on which TSA sends the invoice to the State.

Paragraph (d) also specifies that TSA accept fees only from a State, not from an individual HME applicant. TSA will not issue any fee refunds, and, if a State does not remit the Threat Assessment Fees, TSA may decline to process any HME applications from that State. TSA reserves the right to take any other appropriate action against delinquent States, as necessary.

Section 1572.405 describes the procedures that an HME applicant is required to follow if a TSA agent collects fingerprints and applicant information under the Hazmat Program Rule. Paragraph 1572.405(a) requires an individual applying for an HME, or that individual's employer, to remit the Threat Assessment Fee, FBI Fee, and Information Collection Fee to the TSA agent, in a form and manner approved by TSA, when the individual submits an application pursuant to part 1572 to the TSA agent. It also establishes the Threat Assessment Fee at $34, the FBI Fee at $22, and the Information Collection Fee at $38.

Paragraph 1572.405(b) states that a TSA agent will collect the fees required under this section when an individual submits an application pursuant to 49 CFR part 1572. A TSA agent will: (1) Collect and remit to TSA the Threat Assessment Fee; (2) collect and keep the Information Collection Fee; and (3) collect and remit to TSA the FBI Fee for forwarding to the FBI.

Paragraph 1572.405(c) requires that fees remitted under this section be remitted to TSA by check, money order, wire or any payment method acceptable to TSA in the future. Payments must be made in U.S. currency and made payable to the ''Transportation Security Administration.'' It also specifies that TSA will not issue any refunds of fees submitted under this section. Finally, it specifies that applications submitted under 49 CFR part 1572 are processed only upon receipt of all applicable fees.

Paperwork Reduction Act

The Paperwork Reduction Act of 1995 (PRA) (44 U.S.C. 3501–3520), as amended, requires consideration of the impact of paperwork and other information collection burdens imposed on the public. As provided by the PRA, an agency may not conduct or sponsor, and a person is not required to respond to, a collection of information unless it displays a currently valid Office of Management and Budget (OMB) control number. TSA has determined that there are no new information collection requirements associated with this final rule.

TSA notes that the Hazmat Program Rule requires drivers to submit their fingerprints and other biographical information. Those requirements may be considered an information collection burden under the PRA. Since they are imposed under the Hazmat Program Rule, they are discussed in that rulemaking.

Regulatory Analyses

Changes to Federal regulations must undergo several economic analyses. First, Executive Order 12866 directs each Federal agency to adopt a regulation only if the agency makes a reasoned determination that the benefits of the intended regulation justify its costs. Second, the Regulatory Flexibility Act of 1980 (5 U.S.C. 605(b)) requires agencies to analyze the economic impact of regulatory changes on small entities. Third, the Trade Agreements Act (19 U.S.C. 2531–2533) prohibits

agencies from setting standards that create unnecessary obstacles to the foreign commerce of the United States. In developing U.S. standards, the Trade Agreement Act requires agencies to consider international standards, where appropriate, as the basis of U.S. standards. Fourth, the Unfunded Mandates Reform Act of 1995 (Public Law 104–4) requires agencies to prepare a written assessment of the costs, benefits, and other effects of final rules that include a Federal mandate likely to result in the expenditure by State, local, or tribal governments, in the aggregate, or by the private sector, of $100 million or more annually (adjusted for inflation).

In conducting these analyses, TSA has determined:

1. This rule is not economically significant, as neither the costs nor benefits exceed $100 million annually.
2. This rule is a ''significant regulatory action'' as defined in the Executive Order because there is significant public interest in security issues since September 11, 2001.
3. Both threshold tests and a Final Regulatory Flexibility Analysis show the rule will not have a significant direct impact on a substantial number of small entities.
4. The rule will impose no significant barriers to international trade.
5. The rule will not impose an unfunded mandate on State, local, or tribal governments, or on the private sector in excess of $100 million annually.

Executive Order 12866 Assessment

Executive Order 12866, ''Regulatory Planning and Review'' (58 FR 51735, October 4, 1993), provides for making determinations whether a regulatory action is ''significant'' and therefore subject to OMB review and to the requirements of the Executive Order. TSA has determined that this action is a significant regulatory action within the meaning of Executive Order 12866 because there is significant public interest in security issues since September 11, 2001, as well as the background check requirements in the Hazmat Program Rule.

This final rule responds to the requirements of section 520 of the 2004 Appropriations Act by establishing fees for the background checks TSA is required to perform by section 1012 of the USA PATRIOT Act and sections 1121–1123 of the SEA. The final rule establishes two fees: A user fee to cover the HME security threat assessment program and associated costs (Threat Assessment Fee) and a user fee to cover the costs of collecting and transmitting fingerprints and applicant information (Information Collection Fee). The amount of the fees are $34 (Threat Assessment Fee) and $38 (Information Collection and Transmission Fee) per HME applicant. There will also be a $22 fee to cover FBI's CHRC.

TSA has prepared a full regulatory evaluation for this final rule, which is available for review in the docket of this matter. The regulatory evaluation examines the costs and benefits of the final rule establishing fees for security threat assessments that TSA is required to perform on individuals who apply for or renew an HME for a CDL. The results of the evaluation are summarized below.

Costs

The costs that result from the implementation of the Hazmat Fee Rule are the administrative and labor costs related to determining an equitable level for the Transportation Security Administration's threat assessment fee; remitting and processing that fee; and remitting and processing the Federal Bureau of Investigation's criminal history record check fee. The costs identified in this regulatory evaluation are not the costs of completing threat assessments or criminal history record checks. Because those identity vetting procedures are mandated by a companion interim final rule, titled ''Security Threat Assessment for Individuals Applying for a Hazardous Materials Endorsement for a Commercial Driver's License'' RIN 1652-AA17 (Hazmat Program Rule), the costs of those procedures were catalogued in that rule's attendant regulatory evaluation.

The total administrative and labor costs of the Hazmat Fee Rule, however, are a function of how each State decides to fulfill the requirements of the Hazmat Program Rule. In complying with the Hazmat Program Rule, each State must either collect and forward all fingerprints, applicant information, and fees to TSA and the FBI, or allow an entity approved by TSA to complete these tasks. States were required to notify TSA in writing of their choice by December 27, 2004.

The Hazmat Program Rule was published on November 24, 2004, and 17 States notified TSA that they will opt to collect all requisite fees and applicant information and then pass that information along to TSA and the FBI. In constant 2004 U.S. dollars, the total ten year cost for this aspect of the program is estimated to be approximately $900,000.

The remaining 34 States will allow a TSA-approved agent to perform all required fingerprint, fee and information collection duties. For this aspect of the program, the ten-year cost of the Fee Rule is estimated to be $1.3 million. The total ten-year cost for this final rule, therefore, is estimated to be $2.2 million in constant 2004 U.S. dollars. Discounted, the rule is estimated to cost $1.6 million over the ten-year horizon.

Two summary tables provide an overview of the cost estimates. See Figures 2 and 3. A detailed discussion of the cost estimates can be found in the Cost of Compliance Section of this evaluation.

Figure 3. Summary of Costs, Constant 2004 US Dollars

Year	State Costs	TSA Costs	Total[1]
2005	$125,800	$131,600	$257,400
2006	$45,900	$131,600	$177,500
2007	$125,800	$131,600	$257,400
2008	$45,900	$131,600	$177,500
2009	$125,800	$131,600	$257,400
2010	$45,900	$131,600	$177,500
2011	$125,800	$131,600	$257,400
2012	$45,900	$131,600	$177,500
2013	$125,800	$131,600	$257,400
2014	$45,900	$131,600	$177,500
Total[1]			**$2,200,000**

Source: TSA calculations.

[1]Totals may not sum due to rounding.

Figure 4. Summary of Costs, Discounted 2004 US Dollars[1]

Year	State Costs	TSA Costs	Total[2]
2005	$125,800	$131,600	$257,400
2006	$42,900	$123,000	$165,900
2007	$109,900	$114,900	$224,800
2008	$37,500	$107,400	$144,900
2009	$96,000	$100,400	$196,400
2010	$32,700	$93,800	$126,500
2011	$83,800	$87,700	$171,500
2012	$28,600	$82,000	$110,600
2013	$73,200	$76,600	$149,800
2014	$25,000	$71,600	$96,600
Total[2]			**$1,600,000**

Source: TSA calculations.

[1]A 7% discount rate was used in this analysis

[2]Total may not sum due to rounding

Benefits

There are several qualitative benefits realized from the implementation of the Hazmat Fee Rule. Primarily, the Hazmat Fee Rule provides a funding mechanism for the Hazmat Program Rule, which regulates the population of drivers with hazardous materials endorsements. By creating a set of fees, TSA ensures that the cost of regulation is not the sole responsibility of the Federal Government. TSA determined that creating a fee rule was the most efficient and cost effective way to fund the aforementioned Hazmat Program Rule.

Final Regulatory Flexibility Assessment

The Regulatory Flexibility Act of 1980 (RFA), as amended, was enacted by Congress to ensure that small entities (small businesses, small not-for-profit organizations, and small governmental jurisdictions) are not unnecessarily or disproportionately burdened by Federal regulations. The RFA requires agencies to review rules to determine if they have ''a significant economic impact on a substantial number of small entities.'' TSA has determined that this final rule will not have a significant economic impact on a substantial number of small entities.

An analysis of the rule's impact on small entities, as well as responses to comments on the analysis that TSA prepared for the Fee NPRM, is contained in the Final Regulatory Evaluation, which is available in the docket of this rulemaking. Based on that analysis, TSA has determined that the rule will have an impact on a substantial number of small entities. However, TSA has determined that the impact on entities affected by the rule will not be significant. Accordingly, TSA hereby certifies that this rule will not have a significant economic impact

on a substantial number of small entities.

Unfunded Mandates Assessment

Section 202 of the Unfunded Mandates Reform Act of 1995 (UMRA) requires Federal agencies to prepare a written assessment of the costs, benefits, and other effects of proposed or final rules that include a Federal mandate likely to result in the expenditure by State, local, or tribal governments, in the aggregate, or by the private sector, of more than $100 million in any one year (adjusted for inflation with base year of 1995). Before promulgating a rule for which a written assessment is needed, section 205 of UMRA generally requires TSA to identify and consider a reasonable number of regulatory alternatives and adopt the least costly, most cost-effective, or least burdensome alternative that achieves the objective of the rule. The provisions of section 205 do not apply when they are inconsistent with applicable law. Moreover, section 205 allows TSA to adopt an alternative other than the least costly, most cost-effective, or least burdensome alternative if the agency publishes with the final rule an explanation of the reasons that alternative was not adopted.

TSA has determined that this rule will not result in the expenditure by State, local, or tribal governments, in the aggregate, or by the private sector, of more than $100 million annually.

International Trade Impact Assessment

The Trade Agreement Act of 1979 prohibits Federal agencies from establishing any standards or engaging in related activities that create unnecessary obstacles to the foreign commerce of the United States. Legitimate domestic objectives, such as safety, are not considered unnecessary obstacles. The statute also requires consideration of international standards and, where appropriate, that they be the basis for U.S. standards.

TSA has assessed the potential effect of this rulemaking and has determined that it will have only a domestic impact and therefore no effect on any trade-sensitive activity. This final rule will impact only individuals applying for a State-issued HME, not individuals with an HME issued by Canada or Mexico. As noted above, TSA has implemented a program for Canadian drivers who transport explosives into the U.S. TSA is also consulting with Canada and Mexico on requiring threat assessments for Canadian and Mexican drivers who transport hazmat into the U.S., and will continue to do so. TSA will also continue to consult with Canada and Mexico to ensure that any adverse impacts on trade are minimized.

Executive Order 13132 (Federalism)

Executive Order 13132 requires TSA to develop an accountable process to ensure ''meaningful and timely input by State and local officials in the development of regulatory policies that have federalism implications.'' ''Policies that have federalism implications'' is defined in the Executive Order to include regulations that have ''substantial direct effects on the States, on the relationship between the national government and the States, or on the distribution of power and responsibilities among the various levels of government.''

TSA has analyzed this final rule under the principles and criteria of Executive Order 13132. TSA notes that various statutes mandate the requirements of this final rule, including the USA PATRIOT Act, SEA, and section 520 of the Homeland Security Appropriations Act of 2004. Moreover, the Federal Government, primarily through the Federal Motor Carrier Safety Administration, is already substantially involved in establishing conditions for the issuance of an HME. Accordingly, TSA has determined that this action will not have a substantial direct effect on the States, on the relationship between the national Government and the States, or on the distribution of power and responsibilities among the various levels of government, and therefore will not have federalism implications. However, TSA determined that the Hazmat Program Rule has federalism implications.[46] In the preamble of the Hazmat Program Rule, TSA noted that both TSA and FMCSA coordinated with the States in the development of the rule.

Environmental Analysis

TSA has reviewed this proposal for purposes of the National Environmental Policy Act of 1969 (NEPA) (42 U.S.C. 4321–4347) and has determined that this action will not have a significant effect on the human environment. The final rule will only implement a fee structure for commercial drivers who transport hazardous materials, and thus will have no environmental consequences.

Energy Impact

TSA has assessed the energy impact of this proposal in accordance with the Energy Policy and Conservation Act (EPCA) Public Law 94–163, as amended (42 U.S.C. 6362). TSA has determined that this rulemaking is not a major regulatory action under the provisions of the EPCA.

List of Subjects in 49 CFR Part 1572

Fees, Commercial driver's license, Criminal history background checks, Explosives, Hazardous materials, Motor carriers, Motor vehicle carriers, Security measures, Security threat assessment.

The Amendments

■ For the reasons set forth in the preamble, the Transportation Security Administration amends chapter XII of title 49, Code of Federal Regulations, as follows:

Subchapter D—Maritime and Land Transportation Security

PART 1572—CREDENTIALING AND BACKGROUND CHECKS FOR LAND TRANSPORTATION SECURITY

■ 1. The authority citation for part 1572 is revised to read as follows:

Authority: 49 U.S.C. 114, 5103a, 40113, and 46105; 18 U.S.C. 842, 845; Sec. 520, Pub. L. 108–90, 117 Stat. 1156 (6 U.S.C. 469).

■ 2. Add new subparts D and E to part 1572 as follows:

Subpart D—Fees for Security Threat Assessments for Individuals

Sec.
1572.301 Scope and definitions.
1572.303–1572.399 [Reserved]

Subpart E—Fees for Security Threat Assessments for Hazmat Drivers

1572.401 Fee collection options.
1572.403 Fee procedures for collection by States.
1572.405 Fee procedures for collection by TSA agents.

Subpart D—Fees for Security Threat Assessments for Individuals

§ 1572.301 Scope and definitions.

(a) *Scope.* This part applies to:

(1) States that issue a hazardous materials endorsement for a commercial driver's license;

(2) Individuals who apply for or renew a hazardous materials endorsement for a commercial driver's license and must undergo a security threat assessment under 49 CFR part 1572; and

(3) Entities who collect fees from such individuals on behalf of TSA.

(b) *Terms.* As used in this part:

Commercial driver's license (CDL) is used as defined in 49 CFR 383.5.

Day means calendar day.

Endorsement is used as defined in 49 CFR 383.5.

FBI Fee means the fee required for the cost of the Federal Bureau of

[46] See 69 FR 68741 (November 24, 2004).

Investigation to process fingerprint identification records and name checks.

Hazardous materials means any material that has been designated as hazardous under 49 U.S.C. 5103 and is required to be placarded under subpart F of 49 CFR part 172 or any quantity of a material listed as a select agent or toxin in 42 CFR part 73.

Hazardous materials endorsement (HME) means the authorization for an individual to transport hazardous materials in commerce, which must be issued on the individual's commercial driver's license.

Information Collection Fee means the fee required in this part for the cost of collecting and transmitting fingerprints and other applicant information under 49 CFR part 1572.

State means a State of the United States or the District of Columbia.

Threat Assessment Fee means the fee required in this part for the cost of TSA adjudicating security threat assessments, appeals, and waivers under 49 CFR part 1572.

TSA agent means an entity approved by TSA to collect and transmit fingerprints and applicant information in accordance with 49 CFR part 1572 and fees in accordance with this part.

§§ 1572.303–1572.399 [Reserved]

Subpart E—Fees for Security Threat Assessments for Hazmat Drivers

§ 1572.401 Fee collection options.

(a) *State collection and transmission.* If a State collects fingerprints and applicant information under 49 CFR part 1572, the State must collect and transmit to TSA the Threat Assessment Fee in accordance with the requirements of § 1572.403. The State also must collect and remit the FBI Fee in accordance with established procedures.

(b) *TSA agent collection and transmission.* If a TSA agent collects fingerprints and applicant information under 49 CFR part 1572, the agent must—

(1) Collect the Information Collection Fee, Threat Assessment Fee, and FBI Fee in accordance with procedures approved by TSA;

(2) Transmit to TSA the Threat Assessment Fee in accordance with procedures approved by TSA; and

(3) Transmit to TSA the FBI Fee in accordance with procedures approved by TSA and the Federal Bureau of Investigation.

§ 1572.403 Fee procedures for collection by States.

This section describes the procedures that a State that collects fingerprints and applicant information under 49 CFR part 1572, and the procedures an individual who applies for a new HME or renewal of an existing HME for a CDL in that State, must follow for collection and transmission of the Threat Assessment Fee and the FBI Fee.

(a) *Imposition of fees.* (1) The following Threat Assessment Fee is required for TSA to conduct a security threat assessment under 49 CFR part 1572 for an individual who applies for a new HME or renewal of an existing HME: $34.

(2) The following FBI Fee is required for the FBI to process fingerprint identification records and name checks required under 49 CFR part 1572: the fee collected by the FBI under 28 U.S.C. 534.

(3) An individual who applies for a new or renewed HME, or the individual's employer, must remit to the State the Threat Assessment Fee and the FBI Fee, in a form and manner approved by TSA and the State, when the individual submits the application for the HME to the State.

(b) *Collection of fees.* (1) A State must collect the Threat Assessment Fee and FBI Fee when an individual submits an application to the State for a new HME or renewal of an existing HME.

(2) Once TSA receives an application from a State for a security threat assessment under 49 CFR part 1572, the State is liable for the Threat Assessment Fee.

(3) Nothing in this subpart prevents a State from collecting any other fees that a State may impose on an individual who applies for a new HME or renewal of an existing HME.

(c) *Handling of fees.* (1) A State must safeguard all Threat Assessment Fees from the time of collection until remittance to TSA.

(2) All Threat Assessment Fees are held in trust by a State for the beneficial interest of the United States in paying for the costs of conducting the security threat assessment required by 49 U.S.C. 5103a and 49 CFR part 1572. A State holds neither legal nor equitable interest in the Threat Assessment Fees except for the right to retain any accrued interest on the principal amounts collected pursuant to this section.

(3) A State must account for Threat Assessment Fees separately, but may commingle such fees with other sources of revenue.

(d) *Remittance of fees.* (1) TSA will generate and provide an invoice to a State on a monthly basis. The invoice will indicate the total fee dollars (number of applicants times the Threat Assessment Fee) that are due for the month.

(2) A State must remit to TSA full payment for the invoice within 30 days after TSA sends the invoice.

(3) TSA accepts Threat Assessment Fees only from a State, not from an individual applicant for an HME.

(4) A State may retain any interest that accrues on the principal amounts collected between the date of collection and the date the Threat Assessment Fee is remitted to TSA in accordance with paragraph (d)(2) of this section.

(5) A State may not retain any portion of the Threat Assessment Fee to offset the costs of collecting, handling, or remitting Threat Assessment Fees.

(6) Threat Assessment Fees remitted to TSA by a State must be in U.S. currency and made payable to the ''Transportation Security Administration.''

(7) Threat Assessment Fees must be remitted by check, money order, wire or any other payment method acceptable to TSA.

(8) TSA will not issue any refunds of Threat Assessment Fees.

(9) If a State does not remit the Threat Assessment Fees for any month, TSA may decline to process any HME applications from that State.

§ 1572.405 Fee procedures for collection by TSA agents.

This section describes the procedures that an individual who applies for a new HME or renewal of an existing HME for a CDL must follow if a TSA agent collects and transmits the Information Collection Fee, Threat Assessment Fee, and FBI Fee.

(a) *Imposition of fees.* (1) The following Information Collection Fee is required for a TSA agent to collect and transmit fingerprints and applicant information in accordance with 49 CFR part 1572: $38.

(2) The following Threat Assessment Fee is required for TSA to conduct a security threat assessment under 49 CFR part 1572 for an individual who applies for a new HME or renewal of an existing HME: $34.

(3) The following FBI Fee is required for the FBI to process fingerprint identification records and name checks required under 49 CFR part 1572: The fee collected by the FBI under 28 U.S.C. 534.

(4) An individual who applies for a new or renewed HME, or the individual's employer, must remit to the TSA agent the Information Collection Fee, Threat Assessment Fee, and FBI Fee, in a form and manner approved by TSA, when the individual submits the application required under 49 CFR part 1572.

(b) *Collection of fees.* A TSA agent will collect the fees required under this

section when an individual submits an application to the TSA agent in accordance with 49 CFR part 1572.

(c) *Remittance of fees.* (1) Fees required under this section that are remitted to a TSA agent must be made in U.S. currency and made payable to the ''Transportation Security Administration.''

(2) Fees required under this section must be remitted by check, money order, wire or any other payment method acceptable to TSA.

(3) TSA will not issue any refunds of fees required under this section.

(4) Applications submitted in accordance with 49 CFR part 1572 will be processed only upon receipt of all applicable fees under this section.

Issued in Arlington, Virginia, on January 10, 2005.

Carol DiBattiste,

Acting Assistant Secretary of Homeland Security for TSA.

[FR Doc. 05–773 Filed 1–11–05; 9:50 am]

BILLING CODE 4910–62–P

Reader Aids

Federal Register

Vol. 70, No. 9

Thursday, January 13, 2005

CUSTOMER SERVICE AND INFORMATION

Federal Register/Code of Federal Regulations	
General Information, indexes and other finding aids	**202–741–6000**
Laws	**741–6000**
Presidential Documents	
Executive orders and proclamations	**741–6000**
The United States Government Manual	**741–6000**
Other Services	
Electronic and on-line services (voice)	**741–6020**
Privacy Act Compilation	**741–6064**
Public Laws Update Service (numbers, dates, etc.)	**741–6043**
TTY for the deaf-and-hard-of-hearing	**741–6086**

ELECTRONIC RESEARCH

World Wide Web

Full text of the daily Federal Register, CFR and other publications is located at: **http://www.gpoaccess.gov/nara/index.html**

Federal Register information and research tools, including Public Inspection List, indexes, and links to GPO Access are located at: **http://www.archives.gov/federal_register/**

E-mail

FEDREGTOC-L (Federal Register Table of Contents LISTSERV) is an open e-mail service that provides subscribers with a digital form of the Federal Register Table of Contents. The digital form of the Federal Register Table of Contents includes HTML and PDF links to the full text of each document.

To join or leave, go to **http://listserv.access.gpo.gov** and select *Online mailing list archives, FEDREGTOC-L, Join or leave the list (or change settings);* then follow the instructions.

PENS (Public Law Electronic Notification Service) is an e-mail service that notifies subscribers of recently enacted laws.

To subscribe, go to **http://listserv.gsa.gov/archives/publaws-l.html** and select *Join or leave the list (or change settings);* then follow the instructions.

FEDREGTOC-L and **PENS** are mailing lists only. We cannot respond to specific inquiries.

Reference questions. Send questions and comments about the Federal Register system to: **fedreg.info@nara.gov**

The Federal Register staff cannot interpret specific documents or regulations.

FEDERAL REGISTER PAGES AND DATE, JANUARY

1–248 3
249–660 4
661–1160 5
1161–1324 6
1325–1654 7
1655–1788 10
1789–1994 11
1995–2324 12
2325–2560 13

CFR PARTS AFFECTED DURING JANUARY

At the end of each month, the Office of the Federal Register publishes separately a List of CFR Sections Affected (LSA), which lists parts and sections affected by documents published since the revision date of each title.

3 CFR

Proclamations:
7859 1159
7860 2321

Executive Orders:
13332 (Superseded by EO 13368) 1147
13368 1147
13369 2323

Administrative Orders:
Presidential Determinations:
No. 2004-48 of September 20, 2004 1783
No. 2005-12 of December 10, 2004 1785
No. 2005-13 of December 14, 2004 1
No. 2005-16 of January 4, 2005 1787

5 CFR

Proposed Rules:
213 1833
315 1833
353 1068
530 1068
531 1068
550 1068
575 1068
610 1068
630 1068

7 CFR

301 249
926 1995
983 661
1466 1789
1486 253
1924 1325
2902 1792

Proposed Rules:
97 1835
925 1837
927 2520
982 1839
985 2027
1160 2032
1205 2034

8 CFR

241 661
1240 661
1241 661

9 CFR

93 460
94 460
95 460
96 460

10 CFR

30 2001

Proposed Rules:
40 2053
71 312
709 1383
710 1383

11 CFR

111 3

13 CFR

125 1655

14 CFR

13 1812
21 2325
23 1326
25 ..... 675, 1161, 1163, 2009, 2325
29 2011
39 ..... 7, 10, 261, 265, 677, 679, 680, 684, 685, 687, 690, 1169, 1172, 1176, 1178, 1180, 1182, 1184, 1328, 1329, 1332, 1335, 1336, 1338, 1340, 1655, 1815, 2330, 2333, 2336, 2339
47 240
49 240
65 1634
71 ..... 1342, 1343, 2342, 2343, 2344, 2345, 2346, 2347, 2348
97 ..... 691, 1186

Proposed Rules:
39 ..... 51, 317, 725, 727, 729, 731, 733, 735, 737, 1211, 1215, 2057, 2060, 2062, 2064, 2066, 2067, 2070, 2370
71 ..... 1396, 1397, 1399
257 2372

15 CFR

742 2348
774 2348
996 693

Proposed Rules:
30 2072
710 1216
711 1216
712 1216
713 1216
714 1216
715 1216
716 1216
717 1216
718 1216
719 1216

720....1216
721....1216
722....1216
723....1216
724....1216
725....1216
726....1216
727....1216
728....1216
729....1216
904....740

16 CFR

Proposed Rules:
Ch. 1....2074
1633....2470
1634....2514

17 CFR

171....2350
210....1506
228....1506
229....1506
230....1506
232....1506
239....1506
240....1506
242....1506
245....1506
249....1506
Proposed Rules:
200....1503
201....1503
230....1503
240....1503
242....1503
249....1503
270....1503

18 CFR

35....265
358....284
Proposed Rules:
284....319

20 CFR

404....11
408....11
416....11

21 CFR

510....2352
520....1817, 1818, 2352
1304....291
1306....291
1310....291, 294
Proposed Rules:
357....741

24 CFR

Proposed Rules:
81....1774
200....1750
242....1750

25 CFR

Proposed Rules:
542....1840

26 CFR

1....704, 2012
20....295
301....295, 704, 2012
602....704
Proposed Rules:
1....746, 749, 1400, 2075
31....767
301....2075, 2076

27 CFR

7....194
25....194

28 CFR

570....1659

29 CFR

1910....1112
1915....1112
1926....1112
Proposed Rules:
4000....2080
4010....2080

31 CFR

Proposed Rules:
92....2081

33 CFR

27....17
110....2353
117....1187, 1343, 2355
165....20, 1187, 1345, 2017, 2019, 2355, 2357
Proposed Rules:
117....773
151....1400
165....1400

34 CFR

Proposed Rules:
300....1673
303....1673

36 CFR

219....1022, 1023
Proposed Rules:
242....1216

37 CFR

1....1818
3....1818
Proposed Rules:
404....1403

38 CFR

Proposed Rules:
17....1841

39 CFR

111....1346
501....705, 1348

40 CFR

52....22, 1663, 1664, 1824, 2358
62....1668
63....1670
81....944, 1664
82....1972
180....706, 708, 1349, 1357
271....1825
Proposed Rules:
51....1314, 1640
52....53, 1640, 1673, 2085
62....1674
80....640, 646
81....1673
93....323
194....2101
271....1842
372....1674

41 CFR

102–42....2318

42 CFR

Proposed Rules:
9....1843

47 CFR

1....556
15....1360
27....1189
64....720, 2360
73....25, 723, 724
76....25
Proposed Rules:
64....60, 61, 62
73....63, 775
76....63

48 CFR

Ch. 3....38
206....2361
225....2361
252....2361
401....41
403....41
404....41
405....41
406....41
407....41
408....41
410....41
411....41
413....41
414....41
415....41
416....41
419....41
422....41
423....41
424....41
425....41
426....41
428....41
432....41
433....41
434....41
436....41
439....41
445....41
450....41
452....41
453....41
533....298
552....298
1835....2022
1852....2022

49 CFR

15....1379
24....590
171....2367
172....2367
173....2367
175....2367
199....50
224....144
579....2022
571....299
1520....1379
1572....2542
Proposed Rules:
229....2105
238....2105
571....2105
572....2105
598....2105

50 CFR

17....426, 1190, 1286, 1940
222....1830
224....1830
226....1830
229....2367
622....300
635....302
648....303, 1686, 2023
Proposed Rules:
17....1858, 2244
100....1216
226....325
229....776
648....68, 2108

REMINDERS

The items in this list were editorially compiled as an aid to Federal Register users. Inclusion or exclusion from this list has no legal significance.

RULES GOING INTO EFFECT JANUARY 13, 2005

AGRICULTURE DEPARTMENT

Food Safety and Inspection Service

Food for human consumption:
- Food labeling—
  - Uniform compliance date; published 12-14-04

COMMERCE DEPARTMENT

Industry and Security Bureau

Export administration regulations:
- Commerce Control List—
  - Australia Group understandings and intersessional decision; clarifications, corrections, and Chemical Weapons Convention membership additions; correction; published 1-13-05

COMMODITY FUTURES TRADING COMMISSION

National Futures Association; review of disciplinary, membership denial, registration, and member responsibility actions decisions; amendments; published 1-13-05

DEFENSE DEPARTMENT

Acquisition regulations:
- Australia and Morocco; free trade agreements; published 1-13-05

HEALTH AND HUMAN SERVICES DEPARTMENT

Food and Drug Administration

Animal drugs, feeds, and related products:
- Levamisole powder for oral solution; published 1-13-05
- Sponsor name and address changes—
  - Alstoe, Ltd.; published 1-13-05

HOUSING AND URBAN DEVELOPMENT DEPARTMENT

FHA programs; introduction:
- Tax credit proceeds; distribution; published 12-14-04

TRANSPORTATION DEPARTMENT

Federal Aviation Administration

Aircraft products and parts; certification procedures:
- Armed Forces surplus aircraft; large reciprocating-engine powered airplanes; type certification; correction; published 1-13-05

Airworthiness directives:
- Airbus; published 12-9-04
- Boeing; published 12-9-04
- Empresa Brasileira de Aeronautica, S.A. (EMBRAER); published 12-9-04
- Empresa Brasileira de Aeronautica, S.A. (EMBRAER); correction; published 1-4-05
- Rolls-Royce plc; published 12-29-04

TRANSPORTATION DEPARTMENT

Federal Highway Administration

Engineering and traffic operations:
- National bridge inspection standards; published 12-14-04

COMMENTS DUE NEXT WEEK

AGRICULTURE DEPARTMENT

Agricultural Marketing Service

Cotton classing, testing and standards:
- Classification services to growers; 2004 user fees; Open for comments until further notice; published 5-28-04 [FR 04-12138]

AGRICULTURE DEPARTMENT

Animal and Plant Health Inspection Service

Interstate transportation of animals and animal products (quarantine):
- Brucellosis in swine—
  - Validated brucellosis-free States; list additions; comments due by 1-18-05; published 11-18-04 [FR 04-25600]

Plant-related quarantine, domestic:
- Oriental fruit fly; comments due by 1-18-05; published 11-16-04 [FR 04-25390]

COMMERCE DEPARTMENT

National Oceanic and Atmospheric Administration

Fishery conservation and management:
- Alaska; fisheries of Exclusive Economic Zone—
  - Aleutian Islands pollock; comments due by 1-21-05; published 12-7-04 [FR 04-26835]
  - Pollock; comments due by 1-18-05; published 11-16-04 [FR 04-25431]

COURT SERVICES AND OFFENDER SUPERVISION AGENCY FOR THE DISTRICT OF COLUMBIA

Semi-annual agenda; Open for comments until further notice; published 12-22-03 [FR 03-25121]

DEFENSE DEPARTMENT

Acquisition regulations:
- Information technology equipment; government inventory screening; comments due by 1-21-05; published 11-22-04 [FR 04-25811]
- Pilot Mentor-Protege Program; Open for comments until further notice; published 12-15-04 [FR 04-27351]
- Telecommunications services—
  - Basic agreements; comments due by 1-21-05; published 11-22-04 [FR 04-25812]
  - Clauses update; comments due by 1-21-05; published 11-22-04 [FR 04-25813]

EDUCATION DEPARTMENT

Postsecondary education:
- Higher education discretionary grant programs; selection criteria; comments due by 1-21-05; published 12-22-04 [FR 04-28021]

ENERGY DEPARTMENT

Meetings:
- Environmental Management Site-Specific Advisory Board—
  - Oak Ridge Reservation, TN; Open for comments until further notice; published 11-19-04 [FR 04-25693]

ENERGY DEPARTMENT

Energy Efficiency and Renewable Energy Office

Commercial and industrial equipment; energy efficiency program:
- Test procedures and efficiency standards—
  - Commercial packaged boilers; Open for comments until further notice; published 10-21-04 [FR 04-17730]

ENERGY DEPARTMENT

Federal Energy Regulatory Commission

Electric rate and corporate regulation filings:
- Virginia Electric & Power Co. et al.; Open for comments until further notice; published 10-1-03 [FR 03-24818]

ENVIRONMENTAL PROTECTION AGENCY

Air programs:
- Stratospheric ozone protection—
  - Essential use allowances allocation; comments due by 1-21-05; published 12-22-04 [FR 04-27994]

Air quality implementation plans; approval and promulgation; various States:
- Kentucky; comments due by 1-18-05; published 12-17-04 [FR 04-27657]
- Missouri; comments due by 1-18-05; published 12-17-04 [FR 04-27662]

Environmental statements; availability, etc.:
- Coastal nonpoint pollution control program—
  - Minnesota and Texas; Open for comments until further notice; published 10-16-03 [FR 03-26087]

Superfund program:
- National oil and hazardous substances contingency plan—
  - National priorities list update; comments due by 1-19-05; published 12-20-04 [FR 04-27550]
  - National priorities list update; comments due by 1-19-05; published 12-20-04 [FR 04-27551]

Water pollution control:
- National Pollutant Discharge Elimination System—
  - Concentrated animal feeding operations in New Mexico and Oklahoma; general permit for discharges; Open for comments until further notice; published 12-7-04 [FR 04-26817]

Water pollution; effluent guidelines for point source categories:
- Meat and poultry products processing facilities; Open for comments until further notice; published 9-8-04 [FR 04-12017]

FEDERAL COMMUNICATIONS COMMISSION
Common carrier services:
Interconnection—
Incumbent local exchange carriers unbounding obligations; local competition provisions; wireline services offering advanced telecommunications capability; Open for comments until further notice; published 12-29-04 [FR 04-28531]
Spectrum use; elimination of barriers to development of secondary markets; comments due by 1-18-05; published 12-27-04 [FR 04-27790]
Radio stations; table of assignments:
Kentucky; comments due by 1-18-05; published 12-15-04 [FR 04-27445]

FEDERAL ELECTION COMMISSION
Corporate and labor organization activity:
Trade association's separate segregated fund; payroll deduction contributions; comment request; comments due by 1-21-05; published 12-22-04 [FR 04-27971]
Designations, reports, and statements; timely filing by priority mail, express mail, and overnight delivery service; comments due by 1-21-05; published 12-22-04 [FR 04-27972]

HEALTH AND HUMAN SERVICES DEPARTMENT
Food and Drug Administration
Food additives:
Irradiation in the production, processing and handling of food; comments due by 1-20-05; published 12-21-04 [FR 04-27868]
Food for human consumption:
Food labeling—
Nutrient content claims; general principles; comments due by 1-18-05; published 11-18-04 [FR 04-25529]
Human drugs:
Radioactive drugs for research uses; meeting; comments due by 1-16-05; published 10-5-04 [FR 04-22354]
Reports and guidance documents; availability, etc.:
Evaluating safety of antimicrobial new animal drugs with regard to their microbiological effects on bacteria of human health concern; Open for comments until further notice; published 10-27-03 [FR 03-27113]
Medical devices—
Dental noble metal alloys and base metal alloys; Class II special controls; Open for comments until further notice; published 8-23-04 [FR 04-19179]

HOMELAND SECURITY DEPARTMENT
Coast Guard
Anchorage regulations:
Maryland; Open for comments until further notice; published 1-14-04 [FR 04-00749]
Drawbridge operations:
Louisiana; comments due by 1-18-05; published 11-17-04 [FR 04-25490]
Virginia; comments due by 1-18-05; published 12-2-04 [FR 04-26520]

HOUSING AND URBAN DEVELOPMENT DEPARTMENT
Grants:
Home Investment Partnerships Program; homeownership affordability requirements; amendments; comments due by 1-21-05; published 11-22-04 [FR 04-25753]

INTERIOR DEPARTMENT
Fish and Wildlife Service
Endangered and threatened species permit applications
Recovery plans—
Paiute cutthroat trout; Open for comments until further notice; published 9-10-04 [FR 04-20517]
Migratory bird permits:
Connecticut; Federal falconry standard compliance; comments due by 1-19-05; published 12-20-04 [FR 04-27775]

INTERIOR DEPARTMENT
Native American Graves Protection and Repatriation Act; implementation:
Future applicability procedures; comments due by 1-18-05; published 10-20-04 [FR 04-23179]

LABOR DEPARTMENT
Occupational Safety and Health Administration
State plans:
Oregon; comments due by 1-18-05; published 12-16-04 [FR 04-27565]

LABOR DEPARTMENT
Wage and Hour Division
Practice and procedure:
Service Contract Act wage determinations; publication through Internet website; title and statutory citations changes and regional offices list update; comments due by 1-18-05; published 12-16-04 [FR 04-27422]

NATIONAL ARCHIVES AND RECORDS ADMINISTRATION
Records management:
Media neutral records schedules; comments due by 1-18-05; published 11-19-04 [FR 04-25691]

INTERIOR DEPARTMENT
National Indian Gaming Commission
Management contract provisions:
Minimum internal control standards; comments due by 1-18-05; published 12-1-04 [FR 04-26041]

NUCLEAR REGULATORY COMMISSION
Environmental statements; availability, etc.:
Fort Wayne State Developmental Center; Open for comments until further notice; published 5-10-04 [FR 04-10516]

SMALL BUSINESS ADMINISTRATION
Disaster loan areas:
Maine; Open for comments until further notice; published 2-17-04 [FR 04-03374]

OFFICE OF UNITED STATES TRADE REPRESENTATIVE
Trade Representative, Office of United States
Generalized System of Preferences:
2003 Annual Product Review, 2002 Annual Country Practices Review, and previously deferred product decisions; petitions disposition; Open for comments until further notice; published 7-6-04 [FR 04-15361]

TRANSPORTATION DEPARTMENT
Federal Aviation Administration
Airworthiness directives:
Boeing; comments due by 1-18-05; published 11-16-04 [FR 04-25191]
McCauley Propeller Systems; comments due by 1-21-05; published 11-22-04 [FR 04-25543]
MD Helicopters, Inc.; comments due by 1-21-05; published 11-22-04 [FR 04-25542]
Rolls-Royce Corp.; comments due by 1-21-05; published 11-22-04 [FR 04-25794]
Airworthiness standards:
Special conditions—
Raytheon Aircraft Co. Model MU-300-10 and 400 airplanes; comments due by 1-20-05; published 12-21-04 [FR 04-27824]
Class E airspace; comments due by 1-18-05; published 12-17-04 [FR 04-27688]
VOR Federal airways; comments due by 1-18-05; published 12-3-04 [FR 04-26585]

TRANSPORTATION DEPARTMENT
Research and Special Programs Administration
Food safety regulations:
Safeguarding food from contamination during transportation; comments due by 1-20-05; published 12-21-04 [FR 04-27904]

TREASURY DEPARTMENT
Fiscal Service
Checks drawn on U.S. Treasury; indorsement and payment; comments due by 1-18-05; published 10-19-04 [FR 04-23279]

TREASURY DEPARTMENT
Alcohol and Tobacco Tax and Trade Bureau
Alcoholic beverages:
Wine; materials authorized for treatment of wine and juice; processes authorized for treatment of wine, juice, and distilling material; comments due by 1-18-05; published 11-19-04 [FR 04-25739]

LIST OF PUBLIC LAWS

This is the first in a continuing list of public bills from the current session of Congress which have become Federal laws. It may be used in conjunction with "P L U S" (Public Laws Update Service) on 202–741–6043. This list is also available online at *http://www.archives.gov/federal_register/public_laws/public_laws.html*.

A cumulative List of Public Laws for the second session of the 108th Congress will appear in the issue of January 31, 2005.

The text of laws is not published in the **Federal Register** but may be ordered in ''slip law'' (individual pamphlet) form from the Superintendent of Documents, U.S. Government Printing Office, Washington, DC 20402 (phone, 202–512–1808). The text will also be made available on the Internet from GPO Access at *http://www.gpoaccess.gov/plaws/index.html*. Some laws may not yet be available.

H.R. 241/P.L. 109-1
To accelerate the income tax benefits for charitable cash contributions for the relief of victims of the Indian Ocean tsunami. (Jan. 7, 2005; 119 Stat. 3)

Public Laws Electronic Notification Service (PENS)

PENS is a free electronic mail notification service of newly enacted public laws. To subscribe, go to *http://listserv.gsa.gov/archives/publaws-l.html*

Note: This service is strictly for E-mail notification of new laws. The text of laws is not available through this service. **PENS** cannot respond to specific inquiries sent to this address.